Radar Burst at the End of the Channel Availability Check Time (continued)

Results: 20 MHz Master

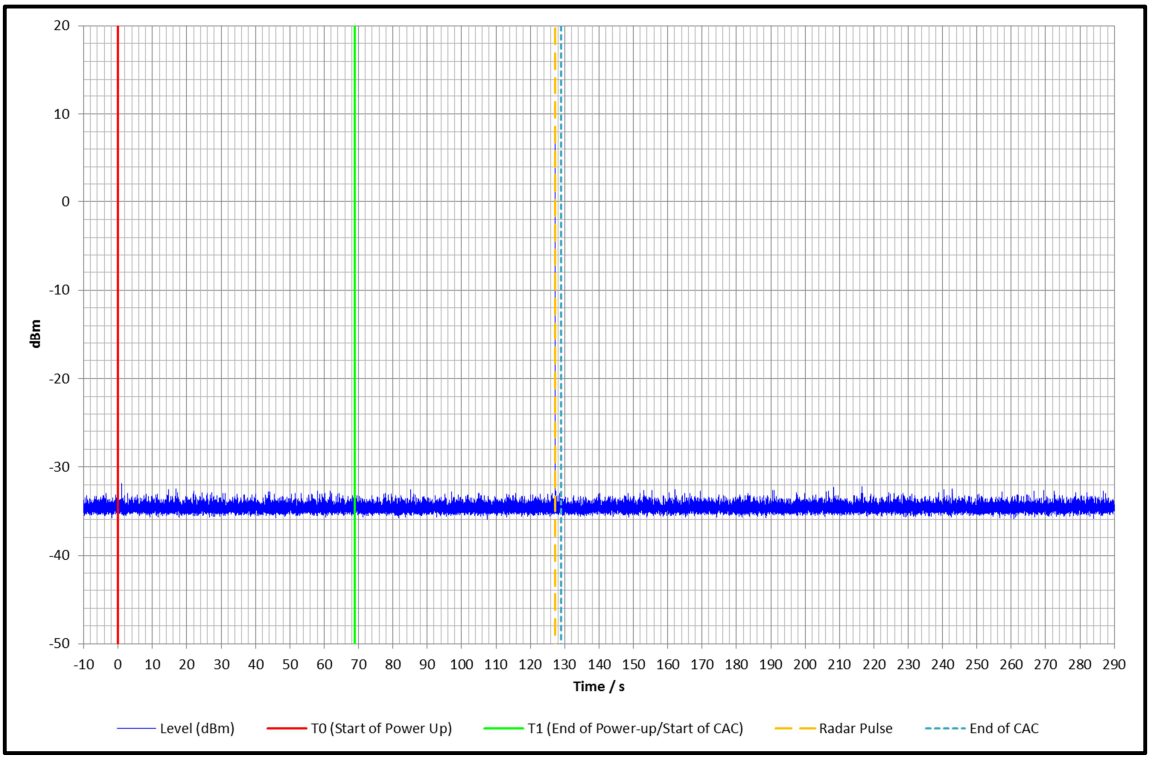

Plot showing the radar fired at the end of CAC

Limits:

Part 15.407(h)(2)(ii)

A U-NII device shall check if there is a radar system already operating on the channel before it can initiate a transmission on a channel and when it has to move to a new channel. The U-NII device may start using the channel if no radar signal with a power level greater than the interference threshold values listed in paragraph (h)(2) of this part, is detected within 60 seconds.

KDB 905462 D02 Table 4: DFS Response Requirement Values

Parameter	Value
Channel Availability Check Time	60 seconds

5.2.5. Channel Closing Transmission Time and Channel Move Time

Test Summary:

Test Engineer:	Philip Harrison	**Test Date:**	15 September 2015
Test Sample Serial Numbers:	F50980BB015D *(Master)* F50980BB0158 *(Client)*		

FCC Reference:	Part 15.407(h)(2)(iii)
Test Method Used:	KDB 905462 D02 Section 7.8.3

Environmental Conditions:

Temperature (°C):	23
Relative Humidity (%):	48

Notes:

1. In accordance with KDB 905462 D02 Table 2, the Initial Channel Availability Check test was performed on the widest channel bandwidth. It was therefore tested only on a 20 MHz channel bandwidth.
2. UDP test data was streamed from the Master to the Client device using iPerf3 bandwidth testing tool. The channel loading was 61.7% with a 22 Mbit/s data rate. This therefore met the channel loading requirement of >17% in KDB 905462 D02 Section 7.7(c).
3. Tests were performed using a type 0 radar and the radar detection threshold calculated in Section 4.2 of this test report.
4. The total channel closing time limit was 200 ms + 60 ms = 260 ms (from KDB 905462 D02 Table 4).
5. Radar burst type 0 was detected and channel move occurred within the channel move and channel closing time limits, for both master and client modes. Therefore the EUT complied.

Channel Closing Transmission Time and Channel Move Time (continued)

Results: 20 MHz Master - Channel Move Time

Channel (MHz)	BW (MHz)	Trial	Radar Type	PW (us)	PRF 1 (pps)	PPB	Move Time (ms)	Limit (ms)	Margin (ms)	Detected
5590	20	1	0	1	700	18	0	10000	10000	Yes

Results: 20 MHz Master - Channel Closing Transmission Time

Channel (MHz)	BW (MHz)	Trial	Radar Type	PW (us)	PRF 1 (pps)	PPB	Total Aggre-gate Tx Time (ms)	Limit (ms)	Margin (ms)	Tx Time >200 ms after end of radar (ms)	Limit (ms)	Margin (ms)
5590	20	1	0	1	700	18	0	260	260	0	60	60

NOTE: A channel move or closing transmission time of zero occurs when the EUT shuts down before the end of the radar burst.

Channel Closing Transmission Time and Channel Move Time (continued)

Results: 20 MHz Master

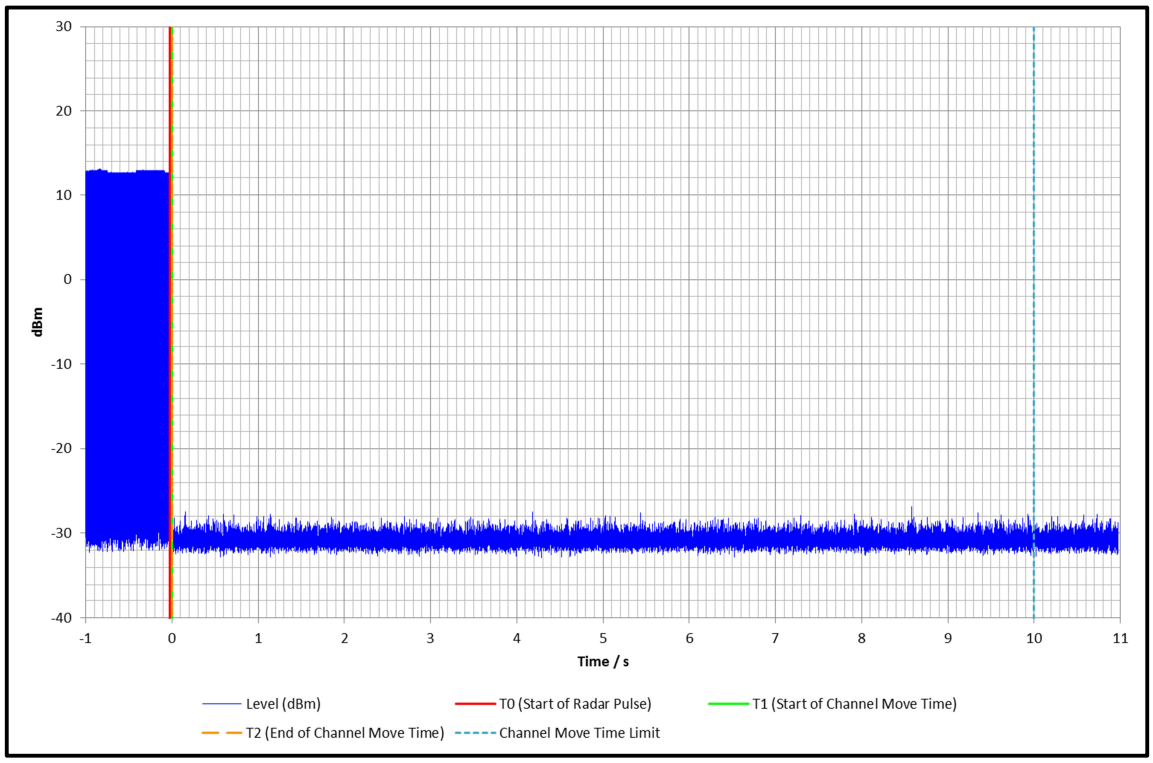

Plot showing the full 10 second shutdown limit

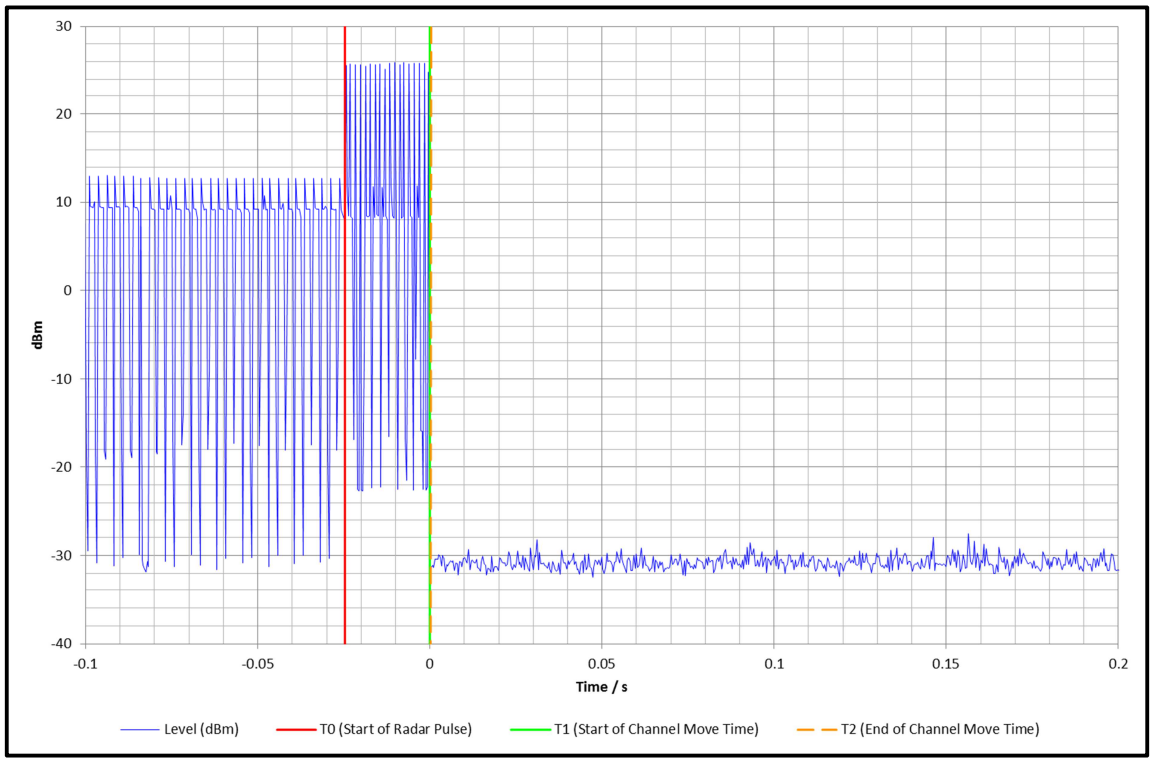

Zoomed plot showing the first 200 ms after the end of the type 0 radar burst

Channel Closing Transmission Time and Channel Move Time (continued)

Results: 20 MHz Client, Radar at Master – Channel Move Time

Channel (MHz)	BW (MHz)	Trial	Radar Type	PW (uS)	PRF 1 (pps)	PPB	Move Time (ms)	Limit (ms)	Margin (ms)	Detected
5590	20	1	0	1	700	18	0	10000	10000	Yes

Results: 20 MHz Client, Radar at Master – Channel Closing Transmission Time

Channel (MHz)	BW (MHz)	Trial	Radar Type	PW (uS)	PRF 1 (pps)	PPB	Total Aggre-gate Tx Time (ms)	Limit (ms)	Margin (ms)	Tx Time >200 ms after end of radar (ms)	Limit (ms)	Margin (ms)
5590	20	1	0	1	700	18	0	260	260	0	60	60

NOTE: A channel move or closing transmission time of zero occurs when the EUT shuts down before the end of the radar burst.

Channel Closing Transmission Time and Channel Move Time (continued)

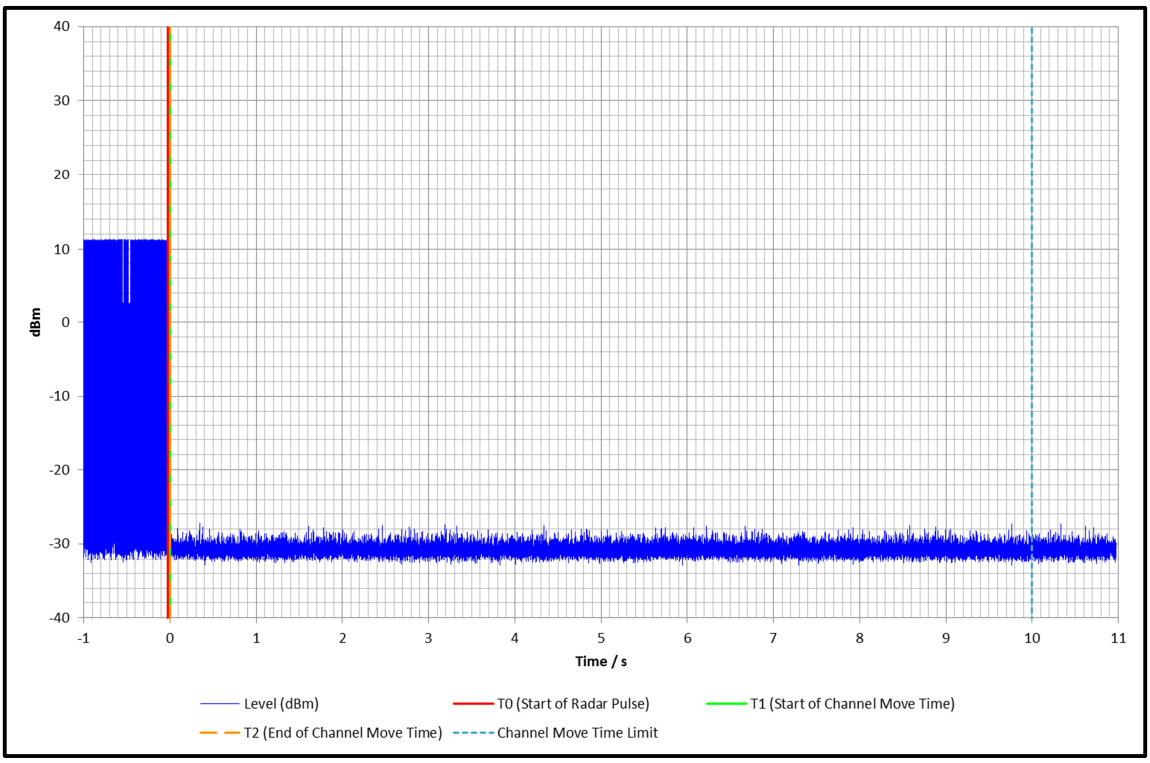

Plot showing the full 10 second shutdown limit

Results: 20 MHz Client – Type 0 Radar fired at Client

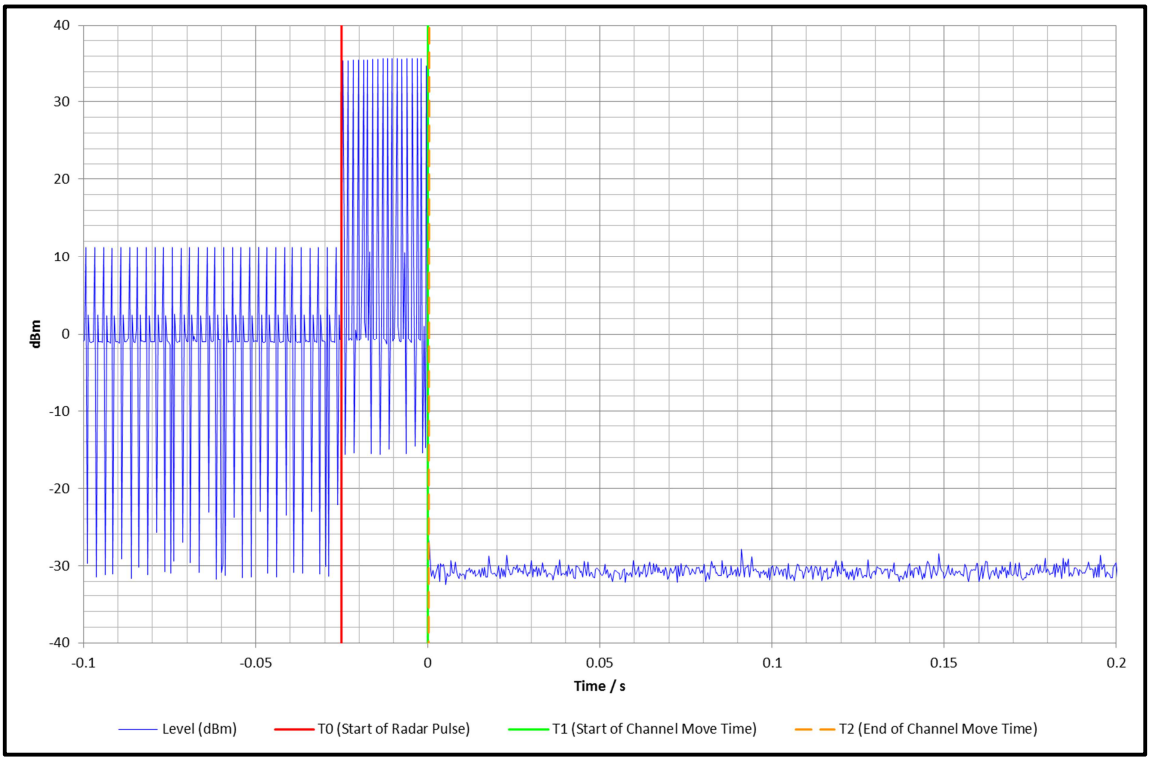

Zoomed plot showing the first 200 ms after the end of the type 0 radar burst

Channel Closing Transmission Time and Channel Move Time (continued)

Limits:

Part 15.407(h)(2)(iii)

After a radar's presence is detected, all transmissions shall cease on the operating channel within 10 seconds. Transmissions during this period shall consist of normal traffic for a maximum of 200 ms after detection of the radar signal. In addition, intermittent management and control signals can be sent during the remaining time to facilitate vacating the operating channel.

KDB 905462 D02 Table 4: DFS Response Requirement Values

Parameter	Value
Channel Move Time	10 seconds See Note 1.
Channel Closing Transmission Time	200 milliseconds + an aggregate of 60 milliseconds over remaining 10 second period. See Notes 1 and 2.
Note 1: *Channel Move Time* and the *Channel Closing Transmission Time* should be performed with Radar Type 0. The measurement timing begins at the end of the Radar Type 0 burst. **Note 2:** The *Channel Closing Transmission Time* is comprised of 200 milliseconds starting at the beginning of the *Channel Move Time* plus any additional intermittent control signals required to facilitate a *Channel* move (an aggregate of 60 milliseconds) during the remainder of the 10 second period. The aggregate duration of control signals will not count quiet periods in between transmissions.	

5.2.6. Non-occupancy Period

Test Summary:

Test Engineer:	Philip Harrison	**Test Date:**	15 September 2015
Test Sample Serial Numbers:	F50980BB015D *(Master)* F50980BB0158 *(Client)*		

FCC Reference:	Part 15.407(h)(iv)
Test Method Used:	KDB 905462 D02 Section 7.8.3

Environmental Conditions:

Temperature (°C):	25
Relative Humidity (%):	42

Notes:

1. In accordance with KDB 905462 D02 Table 2, the Initial Channel Availability Check test was performed on any single bandwidth. It was therefore tested only on a 20 MHz channel bandwidth.
2. Tests were performed using a type 0 radar and the radar detection threshold calculated in Section 4.2 of this test report.
3. Radar burst type 0 was detected and the channel was vacated for >2000 seconds, meeting the 30 minute (1800 second) non-occupancy period. During this period all emissions remained below the -27 dBm/MHz spurious limit. Channel move occurred within the channel move and channel closing time limits. Therefore the EUT complied.

Non-occupancy Period (continued)

Results: 20 MHz Master – Type 0 Radar

Channel (MHz)	BW (MHz)	Trial	Radar Type	Non-Occ (min)	Limit (min)	Margin (min)	Result
5590	20	1	0	31.2	30	1.2	Complied

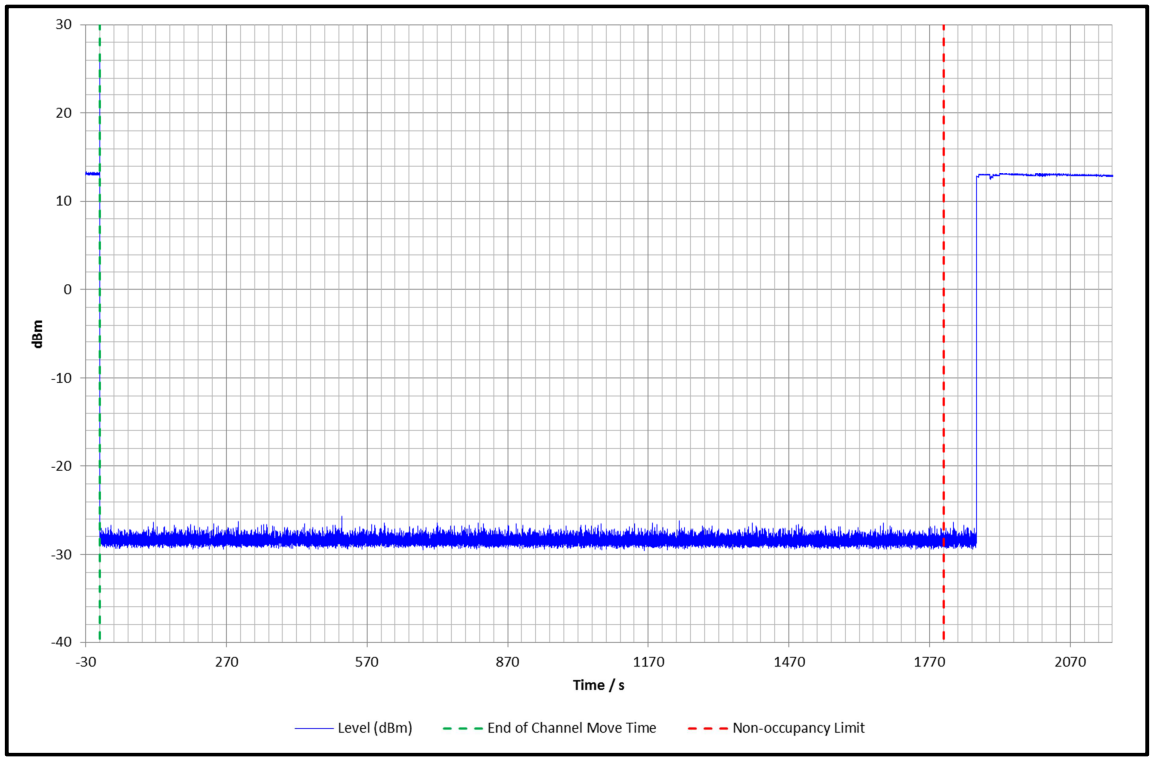

Limits:

Part 15.407(h)(2)(iv)

A channel that has been flagged as containing a radar system, either by a channel availability check or in-service monitoring, is subject to a non-occupancy period of at least 30 minutes. The non-occupancy period starts at the time when the radar system is detected.

KDB 905462 D02 Table 4: DFS Response Requirement Values

Parameter	Value
Non-occupancy period	Minimum 30 minutes

5.2.7. Statistical Performance Check – Short Pulse Radar Types 1 - 4

Test Summary:

Test Engineer:	Philip Harrison	**Test Dates:**	15 September 2015 & 16 September 2015
Test Sample Serial Numbers:	F50980BB015D *(Master)* F50980BB0158 *(Client)*		

FCC Reference:	Part 15.407(h)(2)
Test Method Used:	KDB 905462 D02 Section 7.8.4.1 and Notes below

Environmental Conditions:

Temperature (°C):	23 to 24
Relative Humidity (%):	45 to 47

Notes:

1. In accordance with KDB 905462 D02 Table 2, the Statistical Performance Check test was performed on all supported channel bandwidths.
2. UDP test data was streamed from the Master to the Client device using iPerf3 bandwidth testing tool. This was set to 22 Mbit/s throughput rate. This was a higher rate than the EUT could transmit so gave maximum duty cycle possible. The channel loading was measured as 61.7% for 20 MHz operation, 60.2% for 10 MHz operation or 52.1% for 5 MHz. This therefore met the channel loading requirement of >17% in KDB 905462 D02 Section 7.7(c).
3. Tests were performed using the radar detection threshold calculated in Section 4.2 of this report.
4. Parameters used for the short radar types 1, 2, 3, and 4 may be found in this test report Appendices 5, 6, 7, and 8 respectively.
5. The EUT met the required detection probability, and therefore complied with the *Statistical Performance Check – Short Pulse Radar Types 1 – 4* test.

Statistical Performance Check – Short Pulse Radar Types 1 - 4 (continued)

Results: 5 MHz Master - Radar Type 1

Radar Type	Trial #	Detection Yes / No	Trial #	Detection Yes / No
1	1	Yes	16	Yes
	2	Yes	17	Yes
	3	Yes	18	Yes
	4	Yes	19	Yes
	5	Yes	20	Yes
	6	Yes	21	Yes
	7	Yes	22	Yes
	8	Yes	23	Yes
	9	Yes	24	Yes
	10	Yes	25	Yes
	11	Yes	26	Yes
	12	Yes	27	Yes
	13	Yes	28	Yes
	14	Yes	29	Yes
	15	Yes	30	Yes
EUT Test Frequency:		5597.5 MHz		
Radar Frequency:		5597.5 MHz		
Detection Probability:		100 %		

Results: 5 MHz Master - Radar Type 2

Radar Type	Trial #	Detection Yes / No	Trial #	Detection Yes / No
2	1	Yes	16	Yes
	2	Yes	17	Yes
	3	Yes	18	Yes
	4	Yes	19	Yes
	5	Yes	20	Yes
	6	Yes	21	Yes
	7	Yes	22	Yes
	8	Yes	23	Yes
	9	Yes	24	Yes
	10	Yes	25	Yes
	11	Yes	26	Yes
	12	Yes	27	Yes
	13	Yes	28	Yes
	14	Yes	29	Yes
	15	Yes	30	Yes
EUT Test Frequency:		5597.5 MHz		
Radar Frequency:		5597.5 MHz		
Detection Probability:		100 %		

Statistical Performance Check – Short Pulse Radar Types 1 - 4 (continued)

Results: 5 MHz Master - Radar Type 3

Radar Type	Trial #	Detection Yes / No	Trial #	Detection Yes / No
3	1	Yes	16	Yes
	2	Yes	17	Yes
	3	Yes	18	Yes
	4	Yes	19	Yes
	5	Yes	20	Yes
	6	Yes	21	Yes
	7	Yes	22	Yes
	8	Yes	23	Yes
	9	Yes	24	Yes
	10	Yes	25	Yes
	11	Yes	26	Yes
	12	Yes	27	Yes
	13	Yes	28	Yes
	14	Yes	29	Yes
	15	Yes	30	Yes
EUT Test Frequency:		5597.5 MHz		
Radar Frequency:		5597.5 MHz		
Detection Probability:		100 %		

Results: 5 MHz Master - Radar Type 4

Radar Type	Trial #	Detection Yes / No	Trial #	Detection Yes / No
4	1	Yes	16	Yes
	2	Yes	17	Yes
	3	Yes	18	Yes
	4	Yes	19	Yes
	5	Yes	20	Yes
	6	Yes	21	Yes
	7	Yes	22	Yes
	8	Yes	23	Yes
	9	Yes	24	Yes
	10	Yes	25	Yes
	11	Yes	26	Yes
	12	Yes	27	Yes
	13	Yes	28	Yes
	14	Yes	29	Yes
	15	Yes	30	Yes
EUT Test Frequency:		5597.5 MHz		
Radar Frequency:		5597.5 MHz		
Detection Probability:		100 %		

Statistical Performance Check – Short Pulse Radar Types 1 - 4 (continued)

Results: 10 MHz Master - Radar Type 1

Radar Type	Trial #	Detection Yes / No	Trial #	Detection Yes / No
1	1	Yes	16	Yes
	2	Yes	17	Yes
	3	Yes	18	Yes
	4	Yes	19	Yes
	5	Yes	20	Yes
	6	Yes	21	Yes
	7	Yes	22	Yes
	8	Yes	23	Yes
	9	Yes	24	Yes
	10	Yes	25	Yes
	11	Yes	26	Yes
	12	Yes	27	Yes
	13	Yes	28	Yes
	14	Yes	29	Yes
	15	Yes	30	Yes
EUT Test Frequency:		5595 MHz		
Radar Frequency:		5595 MHz		
Detection Probability:		100 %		

Results: 10 MHz Master - Radar Type 2

Radar Type	Trial #	Detection Yes / No	Trial #	Detection Yes / No
2	1	Yes	16	Yes
	2	Yes	17	Yes
	3	Yes	18	Yes
	4	Yes	19	Yes
	5	Yes	20	Yes
	6	Yes	21	Yes
	7	Yes	22	Yes
	8	Yes	23	Yes
	9	Yes	24	Yes
	10	Yes	25	Yes
	11	Yes	26	Yes
	12	Yes	27	Yes
	13	Yes	28	Yes
	14	Yes	29	Yes
	15	Yes	30	Yes
EUT Test Frequency:		5595 MHz		
Radar Frequency:		5595 MHz		
Detection Probability:		100 %		

Statistical Performance Check – Short Pulse Radar Types 1 - 4 (continued)

Results: 10 MHz Master - Radar Type 3

Radar Type	Trial #	Detection Yes / No	Trial #	Detection Yes / No
3	1	Yes	16	Yes
	2	Yes	17	Yes
	3	Yes	18	Yes
	4	Yes	19	Yes
	5	Yes	20	Yes
	6	Yes	21	Yes
	7	Yes	22	Yes
	8	Yes	23	Yes
	9	Yes	24	Yes
	10	Yes	25	Yes
	11	Yes	26	Yes
	12	Yes	27	Yes
	13	Yes	28	Yes
	14	Yes	29	Yes
	15	Yes	30	Yes
EUT Test Frequency:		5595 MHz		
Radar Frequency:		5595 MHz		
Detection Probability:		100 %		

Results: 10 MHz Master - Radar Type 4

Radar Type	Trial #	Detection Yes / No	Trial #	Detection Yes / No
4	1	Yes	16	Yes
	2	Yes	17	Yes
	3	Yes	18	Yes
	4	Yes	19	Yes
	5	Yes	20	Yes
	6	Yes	21	Yes
	7	Yes	22	Yes
	8	Yes	23	Yes
	9	Yes	24	Yes
	10	Yes	25	Yes
	11	Yes	26	Yes
	12	Yes	27	Yes
	13	Yes	28	Yes
	14	Yes	29	Yes
	15	Yes	30	Yes
EUT Test Frequency:		5595 MHz		
Radar Frequency:		5595 MHz		
Detection Probability:		100 %		

Statistical Performance Check – Short Pulse Radar Types 1 - 4 (continued)

Results: 20 MHz Master - Radar Type 1

Radar Type	Trial #	Detection Yes / No	Trial #	Detection Yes / No
1	1	Yes	16	Yes
	2	Yes	17	Yes
	3	Yes	18	Yes
	4	Yes	19	Yes
	5	Yes	20	Yes
	6	Yes	21	Yes
	7	Yes	22	Yes
	8	Yes	23	Yes
	9	Yes	24	Yes
	10	No	25	Yes
	11	Yes	26	Yes
	12	Yes	27	Yes
	13	Yes	28	Yes
	14	Yes	29	Yes
	15	Yes	30	Yes
EUT Test Frequency:		5590 MHz		
Radar Frequency:		5590 MHz		
Detection Probability:		96.7 %		

Results: 20 MHz Master - Radar Type 2

Radar Type	Trial #	Detection Yes / No	Trial #	Detection Yes / No
2	1	Yes	16	Yes
	2	Yes	17	Yes
	3	Yes	18	Yes
	4	Yes	19	Yes
	5	Yes	20	Yes
	6	Yes	21	Yes
	7	Yes	22	Yes
	8	Yes	23	Yes
	9	Yes	24	Yes
	10	Yes	25	Yes
	11	Yes	26	Yes
	12	Yes	27	Yes
	13	Yes	28	Yes
	14	Yes	29	Yes
	15	Yes	30	Yes
EUT Test Frequency:		5590 MHz		
Radar Frequency:		5590 MHz		
Detection Probability:		100 %		

Statistical Performance Check – Short Pulse Radar Types 1 - 4 (continued)

Results: 20 MHz Master - Radar Type 3

Radar Type	Trial #	Detection Yes / No	Trial #	Detection Yes / No
3	1	Yes	16	Yes
	2	Yes	17	Yes
	3	Yes	18	Yes
	4	Yes	19	Yes
	5	Yes	20	Yes
	6	Yes	21	Yes
	7	Yes	22	Yes
	8	Yes	23	Yes
	9	Yes	24	Yes
	10	Yes	25	Yes
	11	Yes	26	Yes
	12	Yes	27	Yes
	13	Yes	28	Yes
	14	Yes	29	Yes
	15	Yes	30	Yes
EUT Test Frequency:		5590 MHz		
Radar Frequency:		5590 MHz		
Detection Probability:		100 %		

Results: 20 MHz Master - Radar Type 4

Radar Type	Trial #	Detection Yes / No	Trial #	Detection Yes / No
4	1	Yes	16	Yes
	2	Yes	17	Yes
	3	Yes	18	Yes
	4	Yes	19	Yes
	5	Yes	20	Yes
	6	Yes	21	Yes
	7	Yes	22	Yes
	8	Yes	23	Yes
	9	Yes	24	Yes
	10	Yes	25	Yes
	11	Yes	26	Yes
	12	Yes	27	Yes
	13	Yes	28	Yes
	14	Yes	29	Yes
	15	Yes	30	Yes
EUT Test Frequency:		5590 MHz		
Radar Frequency:		5590 MHz		
Detection Probability:		100 %		

Statistical Performance Check – Short Pulse Radar Types 1 - 4 (continued)

Limits:

KDB 905462 D02 Table 5 – Short Pulse Radar Test Waveforms

Radar Type	Pulse Width (µsec)	PRI (µsec)	Number of Pulses	Minimum Percentage of Successful Detection	Minimum Number of Trials
1	1	Test A: 15 unique PRI values randomly selected from the list of 23 PRI values in Table 5a.	$Roundup\left\{\left(\frac{1}{360}\right)\times\left(\frac{19\times10^6}{PRI_{\mu sec}}\right)\right\}$	60%	30
		Test B: 15 unique PRI values randomly selected within the range of 518-3066 µsec, with a minimum increment of 1 µsec, excluding PRI values selected in Test A.			
2	1-5	150-230	23-29	60%	30
3	6-10	200-500	16-18	60%	30
4	11-20	200-500	12-16	60%	30
Aggregate (Radar Types 1-4)				80%	120

5.2.8. Statistical Performance Check – Long Pulse Radar Type 5

Test Summary:

Test Engineer:	Philip Harrison	**Test Date:**	11 November 2015
Test Sample Serial Numbers:	F50980BB015D *(Master)* F50980BB0158 *(Client)*		

FCC Reference:	Part 15.407(h)(2)
Test Method Used:	KDB 905462 D02 Section 7.8.4.2 and Notes below

Environmental Conditions:

Temperature (°C):	21
Relative Humidity (%):	50

Notes:

1. In accordance with KDB 905462 D02 Table 2, the Statistical Performance Check test was performed on all supported channel bandwidths.
2. UDP test data was streamed from the master to the client device using iPerf3 bandwidth testing tool. This was set to 22 Mbit/s throughput rate. This was a higher rate than the EUT could transmit so gave maximum duty cycle possible. The channel loading was measured as 61.7% for 20 MHz operation, 60.2% for 10 MHz operation or 52.1% for 5 MHz. This therefore met the channel loading requirement of >17% in KDB 905462 D02 Section 7.7(c).
3. Tests were performed using the radar detection threshold calculated in Section 4.2 of this test report.
4. Parameters used for the long radar type 5 can be found in Appendix 9 of this test report.
5. The centre frequency for each of the 30 trials of the Bin 5 radar, was randomly selected within 80% of the Occupied Bandwidth.
6. The EUT met the required detection probability, and therefore complied with the *Statistical Performance Check – Long Pulse Radar Type 5* test.

Statistical Performance Check – Long Pulse Radar Type 5 (continued)

Results: 5 MHz Master - Radar Type 5

Radar Type	Trial #	Radar frequency	Detection
			Yes / No
5	1	5595.931	Yes
	2	5596.178	Yes
	3	5596.820	Yes
	4	5597.532	Yes
	5	5597.638	Yes
	6	5597.818	Yes
	7	5597.486	Yes
	8	5597.676	Yes
	9	5599.273	Yes
	10	5597.618	Yes
	11	5599.126	Yes
	12	5596.264	Yes
	13	5598.964	Yes
	14	5597.585	Yes
	15	5598.391	Yes
	16	5597.343	Yes
	17	5597.478	Yes
	18	5598.137	Yes
	19	5598.994	Yes
	20	5597.934	Yes
	21	5598.078	Yes
	22	5596.039	Yes
	23	5597.217	Yes
	24	5596.323	Yes
	25	5598.452	Yes
	26	5596.098	Yes
	27	5596.572	Yes
	28	5596.413	Yes
	29	5597.040	Yes
	30	5598.823	Yes
EUT Test Frequency:		5597.5 MHz	
Detection Probability:		100 %	

Statistical Performance Check – Long Pulse Radar Type 5 (continued)

Results: 10 MHz Master - Radar Type 5

Radar Type	Trial #	Radar frequency	Detection
			Yes / No
5	1	5596.486	Yes
	2	5594.172	Yes
	3	5595.980	Yes
	4	5597.265	Yes
	5	5597.121	Yes
	6	5594.151	Yes
	7	5592.415	Yes
	8	5596.614	Yes
	9	5591.582	Yes
	10	5593.453	Yes
	11	5598.539	Yes
	12	5593.932	Yes
	13	5597.482	Yes
	14	5593.033	Yes
	15	5595.093	Yes
	16	5596.812	Yes
	17	5597.349	Yes
	18	5598.436	Yes
	19	5592.175	Yes
	20	5593.374	No
	21	5592.758	Yes
	22	5596.681	Yes
	23	5592.283	Yes
	24	5594.329	Yes
	25	5596.677	Yes
	26	5594.188	Yes
	27	5593.589	Yes
	28	5591.774	Yes
	29	5593.566	Yes
	30	5595.410	Yes
EUT Test Frequency:		5595 MHz	
Detection Probability:		96.7 %	

Statistical Performance Check – Long Pulse Radar Type 5 (continued)

Results: 20 MHz Master - Radar Type 5

Radar Type	Trial #	Radar frequency	Detection
			Yes / No
5	1	5587.005	Yes
	2	5587.172	Yes
	3	5586.222	Yes
	4	5596.107	Yes
	5	5595.275	Yes
	6	5594.162	Yes
	7	5588.406	Yes
	8	5588.955	Yes
	9	5588.162	Yes
	10	5596.123	Yes
	11	5589.214	Yes
	12	5584.489	Yes
	13	5589.108	Yes
	14	5588.218	Yes
	15	5590.076	Yes
	16	5585.290	Yes
	17	5585.595	Yes
	18	5590.008	Yes
	19	5587.363	Yes
	20	5586.134	Yes
	21	5585.534	No
	22	5587.942	Yes
	23	5594.382	Yes
	24	5596.365	Yes
	25	5589.058	Yes
	26	5583.147	Yes
	27	5595.781	Yes
	28	5585.377	Yes
	29	5586.918	Yes
	30	5595.680	Yes
EUT Test Frequency:		5590 MHz	
Detection Probability:		96.7 %	

Statistical Performance Check – Long Pulse Radar Type 5 (continued)

Limits:

KDB 905462 D02 Table 6 – Long Pulse Radar Test Waveform

Radar Type	Pulse Width (µsec)	Chirp Width (MHz)	PRI (µsec)	Number of Pulses per *Burst*	Number of *Bursts*	Minimum Percentage of Successful Detection	Minimum Number of Trials
5	50-100	5-20	1000-2000	1-3	8-20	80%	30

5.2.9. Statistical Performance Check – Frequency Hopping Radar Type 6

Test Summary:

Test Engineer:	Philip Harrison	**Test Dates:**	15 September 2015 & 16 September 2015
Test Sample Serial Numbers:	F50980BB015D *(Master)* F50980BB0158 *(Client)*		

FCC Reference:	Part 15.407(h)(2)
Test Method Used:	KDB 905462 D02 Section 7.8.4.3 and Notes below

Environmental Conditions:

Temperature (°C):	23 to 24
Relative Humidity (%):	45 to 47

Notes:

1. In accordance with KDB 905462 D02 Table 2, the Statistical Performance Check test was performed on all supported channel bandwidths.
2. UDP test data was streamed from the master to the client device using iPerf3 bandwidth testing tool. This was set to 22 Mbit/s throughput rate. This was a higher rate than the EUT could transmit so gave maximum duty cycle possible. The channel loading was measured as 61.7% for 20 MHz operation, 60.2% for 10 MHz operation or 52.1% for 5 MHz. This therefore met the channel loading requirement of >17% in KDB 905462 D02 Section 7.7(c).
3. Tests were performed using the radar detection threshold calculated in Section 4.2 of this test report.
4. Some of the randomly generated hopping radars included no hops within the detection bandwidth of the EUT. In this case additional radars, which would produce at least one hop within the operating bandwidth of the EUT, were generated and used instead.
5. The EUT met the required detection probability, and therefore complied with the *Statistical Performance Check – Frequency Hopping Radar Type 6* test.

Statistical Performance Check – Frequency Hopping Radar Type 6 (continued)

Results: 5 MHz Master - Radar Type 6

Radar Type	Trial #	Detection Yes / No	Trial #	Detection Yes / No
6	1	Yes	16	Yes
	2	Yes	17	Yes
	3	Yes	18	Yes
	4	Yes	19	Yes
	5	Yes	20	Yes
	6	Yes	21	Yes
	7	Yes	22	Yes
	8	Yes	23	Yes
	9	Yes	24	Yes
	10	Yes	25	Yes
	11	Yes	26	Yes
	12	Yes	27	Yes
	13	Yes	28	Yes
	14	Yes	29	Yes
	15	Yes	30	Yes
EUT Test Frequency:		5597.5 MHz		
Radar Frequency:		Hopping		
Detection Probability:		100 %		

Results: 10 MHz Master - Radar Type 6

Radar Type	Trial #	Detection Yes / No	Trial #	Detection Yes / No
6	1	Yes	16	Yes
	2	Yes	17	Yes
	3	Yes	18	Yes
	4	Yes	19	Yes
	5	Yes	20	Yes
	6	Yes	21	Yes
	7	Yes	22	Yes
	8	Yes	23	Yes
	9	Yes	24	Yes
	10	Yes	25	Yes
	11	Yes	26	Yes
	12	Yes	27	Yes
	13	Yes	28	Yes
	14	Yes	29	Yes
	15	Yes	30	Yes
EUT Test Frequency:		5595 MHz		
Radar Frequency:		Hopping		
Detection Probability:		100 %		

Statistical Performance Check – Frequency Hopping Radar Type 6 (continued)

Results: 20 MHz Master - Radar Type 6

Radar Type	Trial #	Detection Yes / No	Trial #	Detection Yes / No
6	1	Yes	16	Yes
	2	Yes	17	Yes
	3	Yes	18	Yes
	4	Yes	19	Yes
	5	Yes	20	Yes
	6	Yes	21	Yes
	7	Yes	22	Yes
	8	Yes	23	Yes
	9	Yes	24	Yes
	10	Yes	25	Yes
	11	Yes	26	Yes
	12	Yes	27	Yes
	13	Yes	28	Yes
	14	Yes	29	Yes
	15	Yes	30	Yes
EUT Test Frequency:		5590 MHz		
Radar Frequency:		Hopping		
Detection Probability:		100 %		

Limits:

KDB 905462 D02 Table 7 – Frequency Hopping Radar Test Waveform

Radar Type	Pulse Width (µsec)	PRI (µsec)	Pulses per Hop	Hopping Rate (kHz)	Hopping Sequence Length (msec)	Minimum Percentage of Successful Detection	Minimum Number of Trials
6	1	333	9	0.333	300	70%	30

6. Measurement Uncertainty

No measurement or test can ever be perfect and the imperfections give rise to error of measurement in the results. Consequently the result of a measurement is only an approximation to the value of the measurand (the specific quantity subject to measurement) and is only complete when accompanied by a statement of the uncertainty of the approximation.

The expression of uncertainty of a measurement result allows realistic comparison of results with reference values and limits given in specifications and standards.

The uncertainty of the result may need to be taken into account when interpreting the measurement results.

The reported expanded uncertainties below are based on a standard uncertainty multiplied by an appropriate coverage factor such that a confidence level of approximately 95% is maintained. For the purposes of this document “approximately” is interpreted as meaning “effectively” or “for most practical purposes”.

Measurement Type	Confidence Level (%)	Calculated Uncertainty
DFS CAC Plot Timing	95%	± 918 ms
DFS Channel Shutdown Timing	95%	± 450 µs
DFS Non-Occupancy Timing	95%	± 79.25 ms
DFS Radar Amplitude	95%	± 2.17 dB

The methods used to calculate the above uncertainties are in line with those recommended within the various measurement specifications. Where measurement specifications do not include guidelines for the evaluation of measurement uncertainty the published guidance of the appropriate accreditation body is followed.

7. Report Revision History

Version Number	Revision Details		
	Page No(s)	**Clause**	**Details**
1.0	-	-	Initial Version
2.0	19, 21 & 23	-	Changed Note 2

Appendix 1. Test Equipment Used

Asset No.	Instrument	Manufacturer	Type No.	Serial No.	Date Calibration Due	Cal. Interval (Months)
M1785	Thermohygrometer	JM Handelspunkt	30.5015.13	None stated	23 Apr 2016	12
M1760	Thermohygrometer	None stated	HTC-1	None stated	14 Apr 2016	12
M1631	DFS Test System	Aeroflex	PXI 3000	300110/291	Calibrated Before Use	24
M1873	Signal Analyser	Rohde & Schwarz	FSV 30	103074	03 Jul 2016	12
M1585	Network Analyser	Agilent	E5071C	MY46110256	30 Jul 2016	24
A030	Step Attenuator	Narda	445-69	01544	Calibrated Before Use	-
A090	Step Attenuator	Narda	743-60	01057	Calibrated Before Use	-
A2119	Power Splitter	Mini-Circuits	ZN2PD-63-S+	SUU12701203	Calibrated Before Use	-
A1375	10 dB Attenuator	Pasternack	PE7013-10	None stated	Calibrated Before Use	-
A2182	Coaxial Circulator 4 – 18 GHz	AtlanTecRF	ACC-20130-SF-SF-SF	120409231	Calibrated Before Use	-
A2183	Coaxial Circulator 4 – 18 GHz	AtlanTecRF	ACC-20130-SF-SF-SF	120409232	Calibrated Before Use	-
A1317	50Ω Termination	Narda	376BNM	0103	Calibrated Before Use	-
A2494	50Ω Termination	Narda	TA06W5-F	082013#2	Calibrated Before Use	-

NB In accordance with UKAS requirements all the measurement equipment is on a calibration schedule.

Appendix 2. Monitoring Methods Diagrams

All tests were performed as conducted measurements using the setups as shown below. The detecting device always receives the radar via a direct (non-isolated) port of any circulator or splitter to ensure impedance variations do not affect the radar amplitude in accordance with KDB 905462 D02 Section 7.2, point (2).

Setup Diagram – EUT as Master with Radar Injection at Master

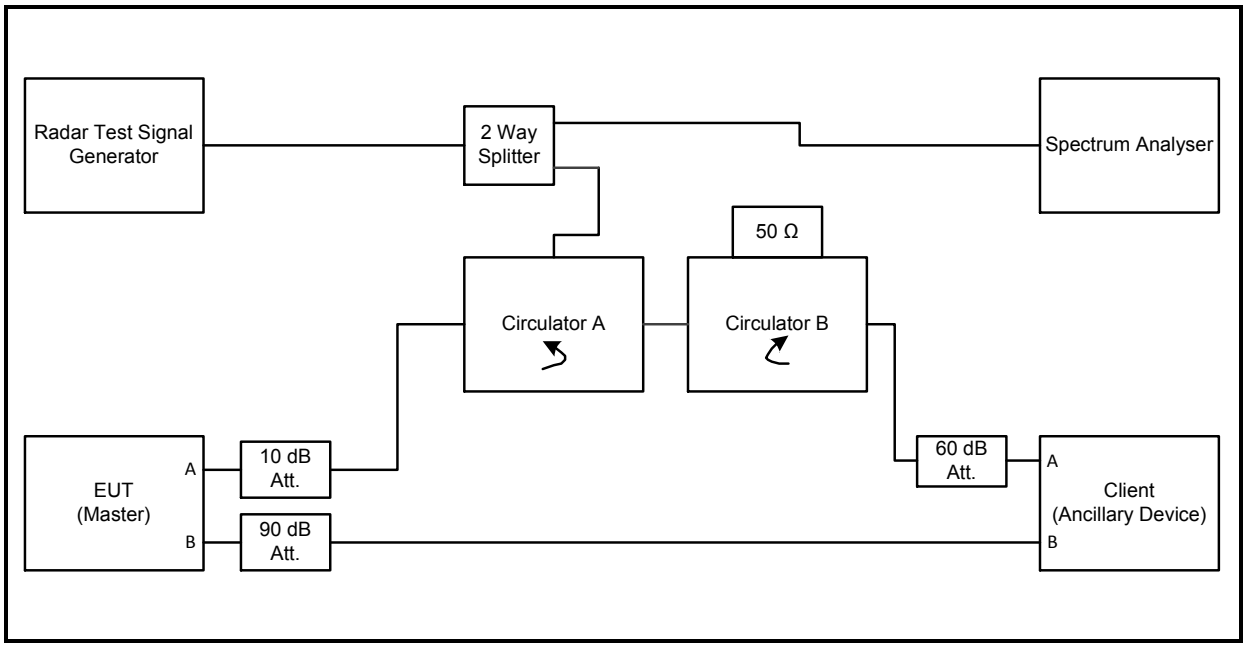

Note: Circulator A directs the radar pulse towards the EUT (Master). Circulator B provides the same transmit path loss in both directions between the Master and Client devices. The EUT will appear larger than the ancillary device, and smaller than the radar at the Spectrum Analyser. The radar will be larger at the EUT than at the ancillary device. For some tests an additional 10 dB attenuator was added between the 2-way splitter and circulator A, and the calibration adjusted, to change the relative radar level on the analyser.

Setup Diagram – EUT as Client, Radar Injection at Master

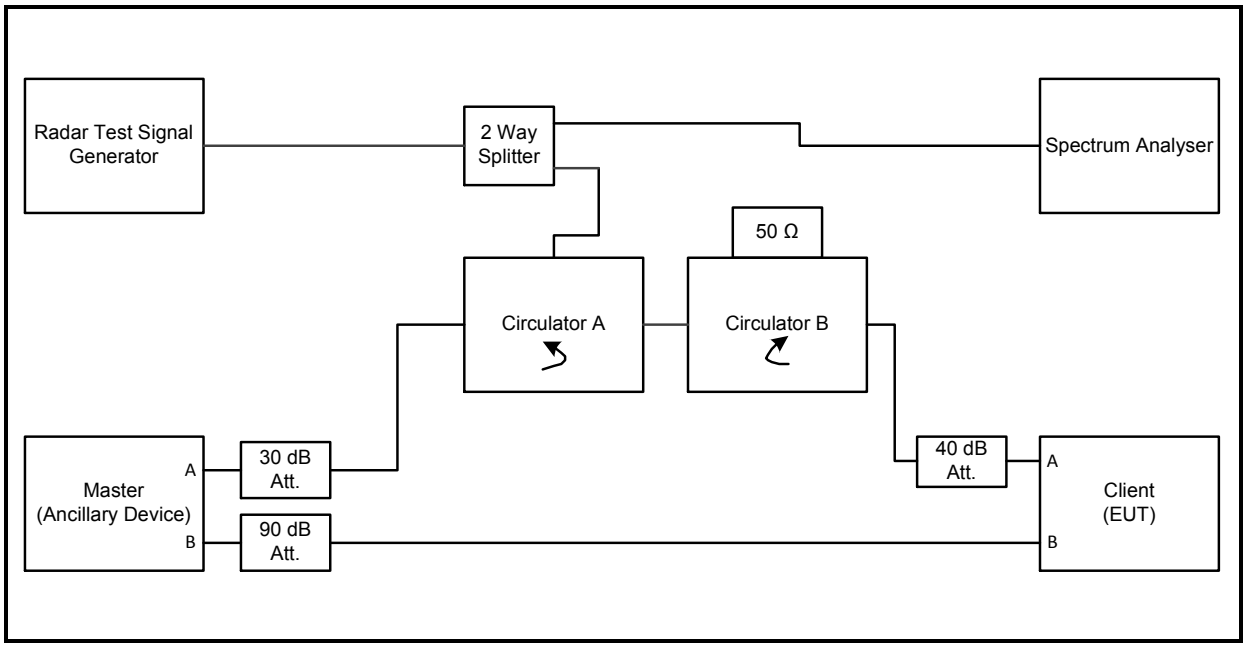

Note: Similarly to the set-up above, circulator A again directs the radar towards the radar detecting device. Circulator B provides the same transmit path loss in both directions between the Master and Client devices whilst also attenuating any radar heading in the direction of the EUT. Due to the different attenuation settings the EUT (Client) will appear larger than the Master device, and smaller than the radar at the Spectrum Analyser. The radar level is recalibrated to account for the different attenuation settings in the radar path.

Appendix 3. Radar Type 1-6 Calibration and Verification Data

All radar types were generated and produced by an Aeroflex DFS test system. The radar pulse generation of this system has previously been verified by the FCC (see Appendix 4 of this test report).

The radar amplitude was calibrated using the setup diagram shown below. The spectrum analyser was replaced by a 50Ω load. The EUT was replaced by a spectrum analyser. The Aeroflex DFS test system was then set to transmit a CW signal used to calibrate the radar level. The output level was adjusted to give the correct level into the EUT, as calculated in Section 4.1 of this report, before the tests were performed.

An additional check was then made using the above calibrated level and a 1 μs pulse of a type 0 radar. Maximum spectrum analyser RBW/VBW setting was used for this to avoid pulse desensitisation effects of the very short burst time. This level was then used for all radar types during testing.