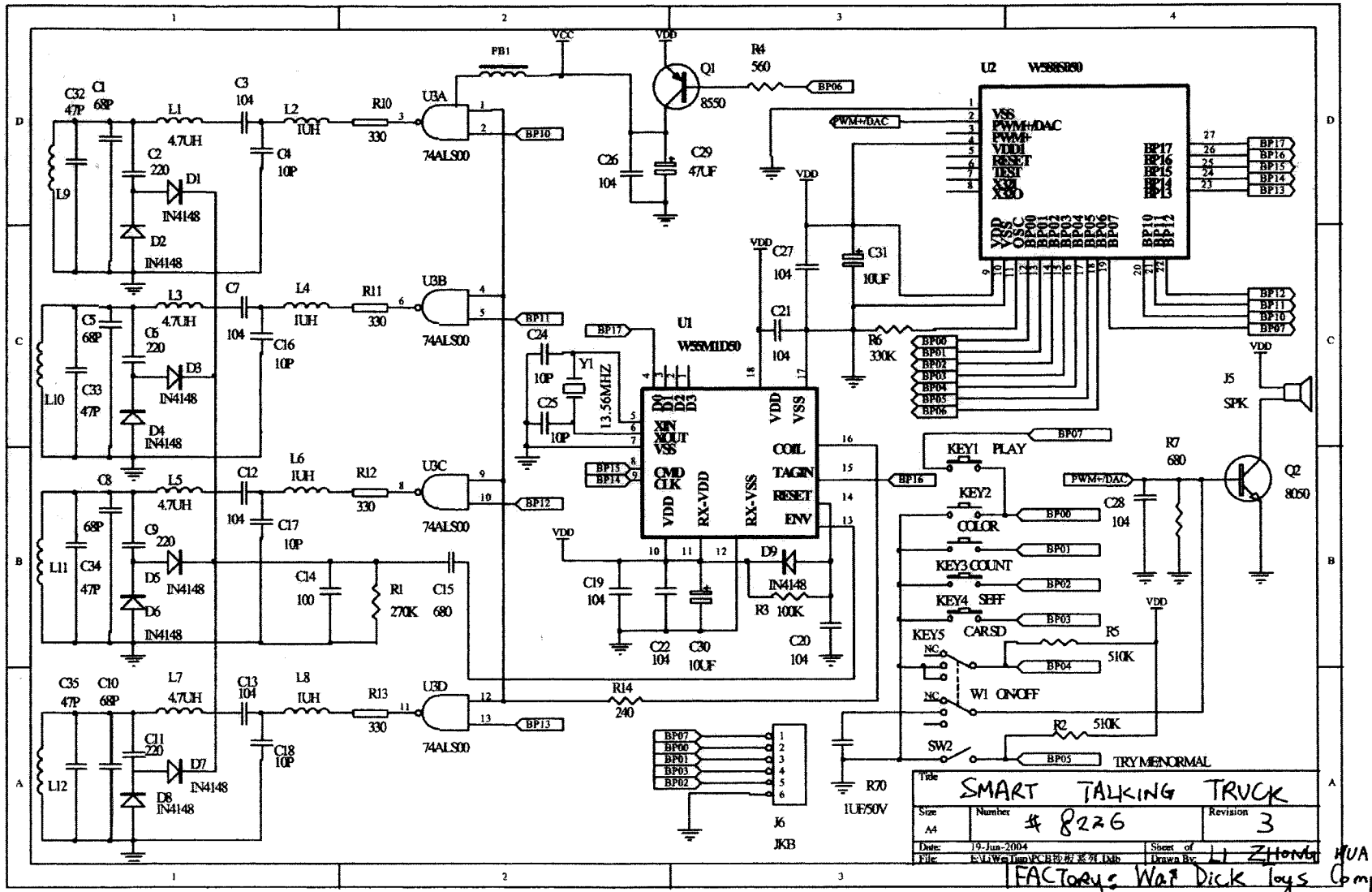

FACTORY: Wan Dick Toys Company Limited

RE: CIRCUIT DIAGRAM FOR TRUCK

W55MID15(GREEN).sch-1 - Wed Aug 04 11:45:21 2004

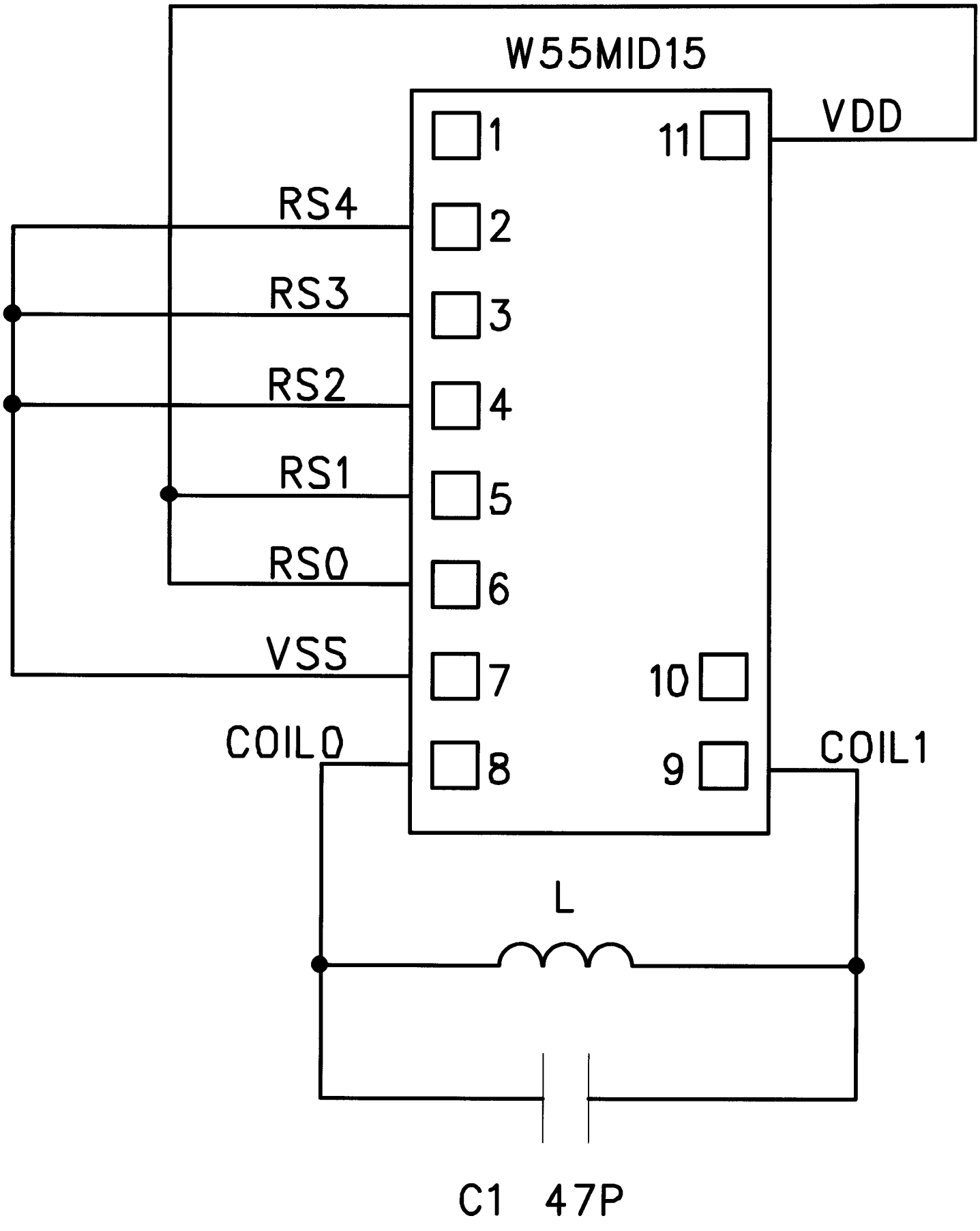

W55MID15(BLUE).sch-1 - Wed Aug 04 11:44:08 2004

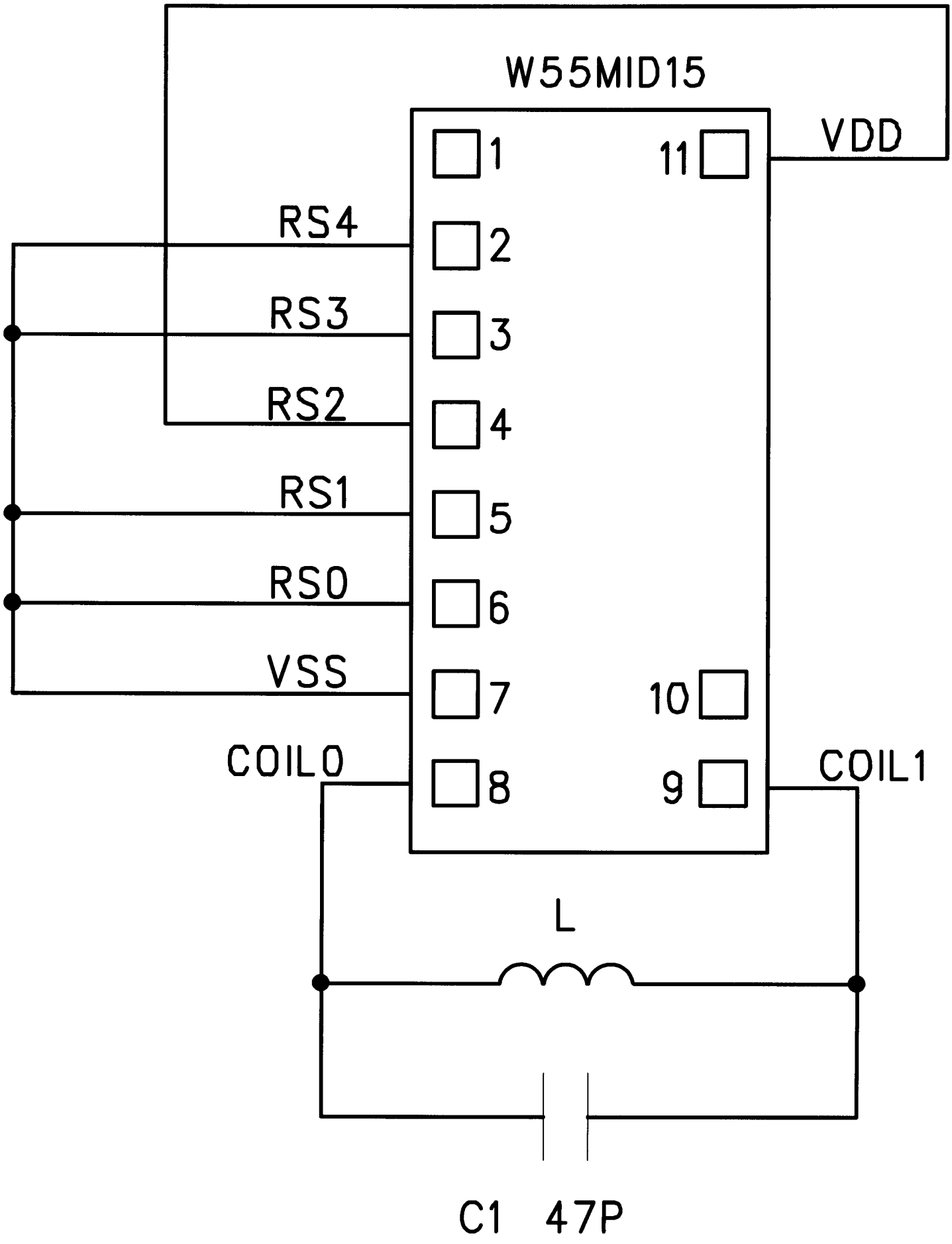

W55MID15(YELLOW).sch-1 - Wed Aug 04 11:47:12 2004

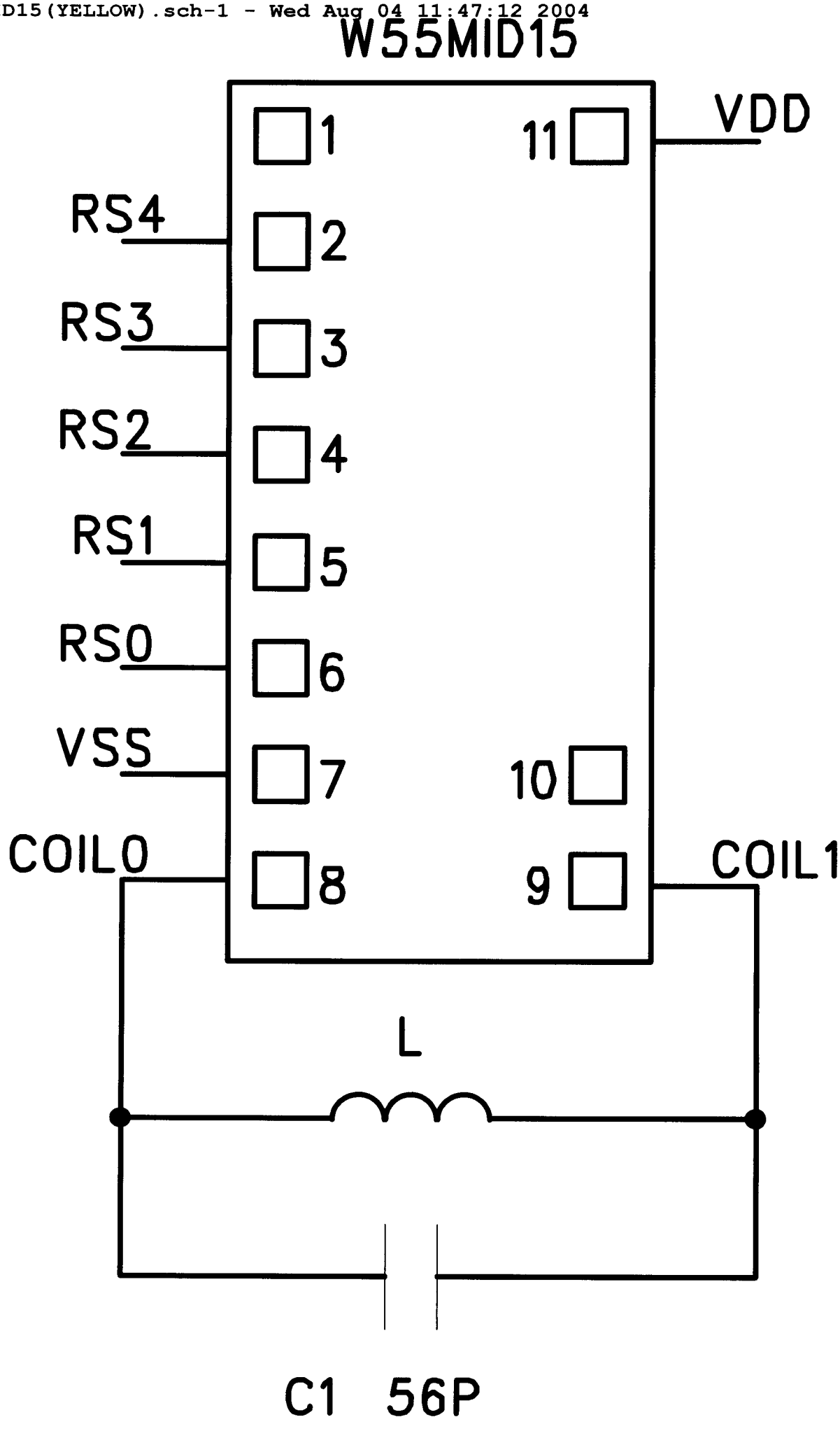
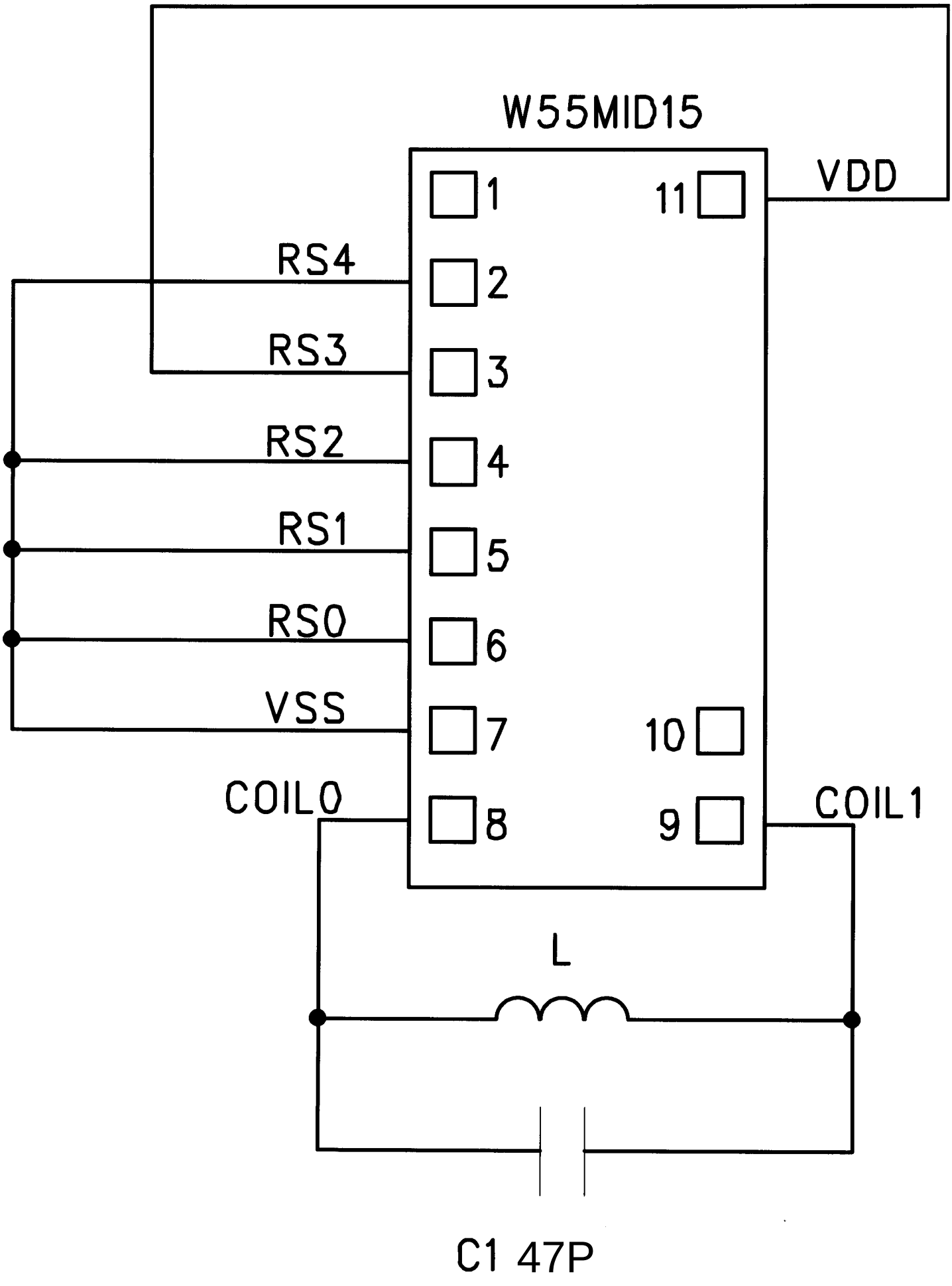
W55MID15(RED).sch-1 - Wed Aug 04 11:46:17 2004