T E S T R E P O R T
No.: 6-0491-14-1-23d

According to:
FCC Regulations
Part 27

for

peiker acustic GmbH & Co. KG

GSM/W-CDMA/LTE Device
ATM-01 T1-RoW-4G
(LTE-Technology)

FCC-ID: QWY-ATM-T-132

Laboratory Accreditation and Listings			
DAkkS Deutsche Akkreditierungsstelle D-PL-12047-01-01	Reg. No.: 736496 MRA US-EU 0003	Industry Canada Reg. No.: 3462D-1 Reg. No.: 3462D-2 Reg. No.: 3462D-3	Voluntary Controls for Electromagnetic Emissions Reg. No.: R-2666 C-2914, T-1967, G-301
WiFi ALLIANCE AUTHORIZED RF LABORATORY	CTIA Authorized Test Lab LAB CODE 20011130-00		
accredited according to DIN EN ISO/IEC 17025			

CETECOM GmbH
Laboratory Radio Communications & Electromagnetic Compatibility
Im Teelbruch 116 • 45219 Essen • Germany
Registered in Essen, Germany, Reg. No.: HRB Essen 8984
Tel.: + 49 (0) 20 54 / 95 19-954 • Fax: + 49 (0) 20 54 / 95 19-964
E-mail: info@cetecom.com • Internet: www.cetecom.com

The test results relate only to the individual items which have been tested. This report shall not be reproduced in parts without the written approval of the testing laboratory © Copyright: All rights reserved by CETECOM

Table of contents

1. SUMMARY OF TEST RESULTS....3

1.1. **TX mode, tests overview according FCC Standards** 3

2. ADMINISTRATIVE DATA 5

2.1. Identification of the testing laboratory....5
2.2. Test location 5
2.3. Organizational items....5
2.4. Applicant's details 5
2.5. Manufacturer's details 5

3. EQUIPMENT UNDER TEST (EUT)....6

3.1. SUMMARY OF RESULTS AND TECHNICAL DATA OF MAIN EUT DECLARED BY APPLICANT .6
3.2. EUT: Type, S/N etc. and short descriptions used in this test report 7
3.3. Auxiliary Equipment (AE): Type, S/N etc. and short descriptions....8
3.4. EUT set-ups 8
3.5. EUT operating modes 9
3.6. Configuration of cables used for testing 9

4. DESCRIPTION OF TEST SYSTEM SET-UP'S 10

4.1. Test system set-up for conducted measurements on antenna port 10
4.2. Test system set-up for radiated magnetic field measurements below 30 MHz....11
4.3. Test system set-up for radiated spurious emission measurements....12

5. MEASUREMENTS 13

5.1. General Limit - Radiated field strength emissions below 30 MHz....13
5.2. RF-Parameter - Radiated out of Band RF emissions and Band Edge 15
5.3. RF-Parameter - RF Peak power output conducted....19
5.4. RF-Parameter - RF Peak power output radiated 22
5.5. RF-Parameter - Conducted out of Band RF emissions and Band Edge....24
5.6. RF-Parameter - Occupied bandwidth and emission bandwidth....27
5.7. RF-Parameter - Frequency stability on temperature and voltage variations 30
5.8. Measurement uncertainties 33

6. ABBREVIATIONS USED IN THIS REPORT 33

7. ACCREDITATION DETAILS OF CETECOM'S LABORATORIES AND TEST SITES 34

8. INSTRUMENTS AND ANCILLARY....35

8.1. Used equipment "CTC" 35

Table of annex

	Total pages
Annex 1: External photographs of EUT - separate document TR6-0491-14-1-23-A1	7
Annex 2: Internal photographs of EUT - separate document TR6-0491-14-1-23-A2	4
Annex 3: Test set-up photographs - separate document TR6-0491-14-1-23-A3	4
Annex 4: Measurement diagrams - separate document TR6-0491-14-1-23d_A4	118

The listed attachments are an integral part of this report.

1. Summary of test results

The test results apply exclusively to the test samples as presented in this Report. The CETECOM GmbH does not assume responsibility for any conclusions and generalizations taken in conjunction with other specimens or samples of the type of the item presented to tests.

The Equipment Under Test (in this report, hereinafter referred as EUT) supports radio frequency technologies. **This test report shows results for LTE Band 7 only.** Other implemented wireless technologies were not considered within this test report.

Following tests have been performed to show compliance with applicable FCC Part 27, of the CFR 47 Rules, Edition 1th October 2013.

1.1. TX mode, tests overview according FCC Standards

No. of Diagram group	Test case	Port	References & Limits			EUT set-up	EUT op-mode	Result
			FCC Standard		Test limit			
--	AC-Power Lines Emissions Conducted (0,15 - 30 MHz)	AC-Power lines (conducted)	§15.207		§15.207 limits	--	--	not performed 1.)
2	General field strength emissions (9 kHz - 30 MHz)	Cabinet + inter-connecting cables (radiated)	§15.209(a)		2400/F(kHz) µV/m 24000/F(kHz) µV/m 30 µV/m	1	1	passed
-	RF-Power (ERP/EIRP)		§2.1046 §27.50(h)(2)		< 2 Watt (EIRP)	1	1	passed
8	Spurious emissions		§2.1053(a) §27.53(m)(4)(6)		for CHE±5MHz ≤ f ≤ CHE±5MHz 40+10log(P) dBc 2.) for 2490,5MHz < f < 2496MHz 43+10log(P) dBc for f ≤ 2490,5MHz 55+10log(P) dBc	1, 2	1	passed
9	Band-Edge compliance		§2.1053(a) §2.1046 §27.53(m) (4)(6)			2	1	passed

table continues on the next page

Remarks:
1.) car build-in equipment
2.) "*(4)* For mobile digital stations, the attenuation factor shall be not less than 40 + 10 log (P) dB on all frequencies between the channel edge and 5 megahertz from the channel edge, 43 + 10 log (P) dB on all frequencies between 5 megahertz and X megahertz from the channel edge, and 55 + 10 log (P) dB on all frequencies more than X megahertz from the channel edge, where X is the greater of 6 megahertz or the actual emission bandwidth as defined in paragraph (m)(6) of this section. In addition, the attenuation factor shall not be less that 43 + 10 log (P) dB on all frequencies between 2490.5 MHz and 2496 MHz and 55 + 10 log (P) dB at or below 2490.5 MHz. Mobile Satellite Service licensees operating on frequencies below 2495 MHz may also submit a documented interference complaint against BRS licensees operating on channel BRS Channel 1 on the same terms and conditions as adjacent channel BRS or EBS licensees." dated 2014-07-16

No. of Diagram group	Test case	Port	References & Limits			EUT set-up	EUT op-mode	Result
			FCC Standard	Test limit				
--	RF Power	Antenna terminal (conducted)	§2.1046	no limit		4	1	passed
34	26dB Emission bandwidth		§2.1049 §27.53(m)(6)	26dBc Emissions BW 99% Power		3, 4	1	for information only
35	99% Occupied bandwidth							
50	Spurious emissions		§2.1051 §2.1057 §27.53(m) (4)(6)	**old:** 43+10log(P) dBc [2.] 55+10log(P) dBc	**new:** for CHE±5MHz ≤ f ≤ CHE±5MHz 40+10log(P) dBc [3.] for 2490,5MHz < f < 2496MHz 43+10log(P) dBc for f ≤ 2490,5MHz 55+10log(P) dBc			passed
37	Band-Edge compliance		§2.1051 §27.53(m) (4)(6)					passed
--	Frequency stability		§2.1055(a)(1) §27.54	< ±2.5ppm				passed

Remarks:

1.) car build-in equipment

2.) used for measurements: "*(4)* For mobile digital stations, the attenuation factor shall be not less than 43 + 10 log (P) dB at the channel edge and 55 + 10 log (P) dB at 5.5 megahertz from the channel edges. Mobile Satellite Service licensees operating on frequencies below 2495 MHz may also submit a documented interference complaint against BRS licensees operating on channel BRS Channel 1 on the same terms and conditions as adjacent channel BRS or EBS licensees."

3.) "*(4)* For mobile digital stations, the attenuation factor shall be not less than 40 + 10 log (P) dB on all frequencies between the channel edge and 5 megahertz from the channel edge, 43 + 10 log (P) dB on all frequencies between 5 megahertz and X megahertz from the channel edge, and 55 + 10 log (P) dB on all frequencies more than X megahertz from the channel edge, where X is the greater of 6 megahertz or the actual emission bandwidth as defined in paragraph (m)(6) of this section. In addition, the attenuation factor shall not be less that 43 + 10 log (P) dB on all frequencies between 2490.5 MHz and 2496 MHz and 55 + 10 log (P) dB at or below 2490.5 MHz. Mobile Satellite Service licensees operating on frequencies below 2495 MHz may also submit a documented interference complaint against BRS licensees operating on channel BRS Channel 1 on the same terms and conditions as adjacent channel BRS or EBS licensees." dated 2014-07-16

.....
D. Franke
Responsible for test section

CETECOM™ GmbH
Im Teelbruch 116
45219 Essen
Tel.: + 49 (0) 20 54 / 95 19 - 0
Fax: + 49 (0) 20 54 / 95 19 - 997

.....
M. Nunier
Responsible for test report

2. Administrative Data

2.1. Identification of the testing laboratory

Company name:	CETECOM GmbH
Address:	Im Teelbruch 116 45219 Essen - Kettwig Germany
Responsible for testing laboratory:	Dipl.-Ing. Niels Jeß
Deputy:	Dipl.-Ing. Rachid Acharkaoui

2.2. Test location

2.2.1. Test laboratory "CTC"

Company name:	see chapter 2.1. Identification of the testing laboratory

2.3. Organizational items

Responsible for test report:	Martin Nunier
Responsible project leader:	Dipl.-Ing. C. Lorenz
Receipt of EUT:	2014-06-30
Date(s) of test:	2014-07-09 - 2014-08-22
Date of report:	2014-09-11
Version of template: 13.02	

2.4. Applicant's details

Applicant's name:	peiker acustic GmbH & Co. KG
Address:	Max-Planck-Straße 28-32 61381 Friedrichsdorf/Ts. GERMANY
Contact person:	Mr. Philippe Seguret

2.5. Manufacturer's details

Manufacturer's name:	please see Applicant's details
Address:	please see Applicant's details

3. Equipment under test (EUT)

3.1. SUMMARY OF RESULTS AND TECHNICAL DATA OF MAIN EUT DECLARED BY APPLICANT

Main function	GSM/W-CDMA/LTE Device		
Type	ATM-01 T1-RoW-4G		
TX-frequency range (E-UTRA operating bands)	LTE Band 7: 2500 - 2570 MHz		
Type of modulation	QPSK, 16-QAM		
Data rates	Cat3, Downlink: max. 100Mbps, Uplink: max. 50Mbps		
Number of channels – Table 5.4.4-1 accord. 3GPP TS36.521-1	LTE Band 7: UARFCN range 20750 – 21449	See Note about channels not to be used depending on channel bandwidths	
Emission designator(s)	Channel bandwidth	QPSK Modulation:	16-QAM Modulation
	5 MHz 10 MHz 15 MHz 20 MHz	4M46G7D 8M94G7D 13M3G7D 17M8G7D	4M47W7D 8M94W7D 13M3W7D 17M8W7D
Antenna Type	☐ Integrated ☐ External, no RF- connector ☒ External, separate RF-connector: main TX + secondary RX connector		
Antenna Gain Tx (main)	☒ Value: +1dBi (Datenblatt_KSV_9308114) ☐ No information from customer		
Antenna Gain Dx (diversity)	☒ Value: -2dBi (Datenblatt_Tel1_9273669) ☐ No information from customer		
Measured Output Power [dBm]: Radiated LTE-Mode 7	29.1 (PK)		
Measured Output Power [dBm]: Conducted LTE-Mode 7	29.01 (PK) 23.11 (AV)		
FCC-ID	QWY-ATM-T-132		
Power supply	☒ DC power only: 14V DC Nominal VMIN=4.5V, VMAX=18V		
Special EMI components	--		
EUT sample type	☐ Production	☒ Pre-Production	☐ Engineering
FCC label attached	☐ yes	☒ no	

3.2. EUT: Type, S/N etc. and short descriptions used in this test report

Short descrip-tion*)	EUT	Type	S/N serial number (IMEI)	HW hardware status	SW software status
EUT A	GSM/W-CDMA/LTE Device	ATM-01 T1-RoW-4G	0000500312 (35190606-000078-6)	202.005.005	001.014.004
EUT B	GSM/W-CDMA/LTE Device	ATM-01 T1-RoW-4G	0000500309 (35190606-000068-7)	202.005.005	001.014.004

*) EUT short description is used to simplify the identification of the EUT in this test report.

3.3. Auxiliary Equipment (AE): Type, S/N etc. and short descriptions

AE short descrip-tion *)	Auxiliary Equipment	Type	S/N serial number	HW hardware status	SW software status
AE 1	Loudspeaker	KL3 / 4-Ohm	--	--	--
AE 2	Microphone	ME 39	--	--	--
AE 3	Antenna TRX mounted on a ground plane	Fender antenna from *Hirschmann* 920325-102	--	--	--
AE 4	Antenna DRX mounted on a ground plane	Bumper telephone antenna from *Hirschmann* 920337-101	--	--	--
AE 5	Antenna GPS mounted on a ground plane	Navilock NL-69AT	--	--	--

*) AE short description is used to simplify the identification of the auxiliary equipment in this test report.

3.4. EUT set-ups

EUT set-up no.*)	Combination of EUT and AE	Remarks
set. 1	EUT A + AE 1 + AE 2+ AE 3+ AE 4 + AE 5	Used for radiated tests
set. 2	EUT B + AE 1 + AE 2+ AE 3+ AE 4 + AE 5	Used for radiated tests
set. 3	EUT A + AE 1 + AE 2	Used for conducted tests
set. 4	EUT B + AE 1 + AE 2	Used for conducted tests

*) EUT set-up no. is used to simplify the identification of the EUT set-up in this test report.

3.5. EUT operating modes

EUT operating mode no.*)	Description of operating modes	Additional information
1	LTE-Band 7 RMC Mode	A communication link is established between the EUT and the test simulator. The transmitter is operated on its maximum rated output power class: 23dBm nominal. The input signal to the receiver is modulated with normal test modulation: QPSK or 16-QAM Modulation. The wanted RF input signal level to the receiver of the mobile station is set to a level to provide a stable communication link. NS_01 Network signalling value was used, no A-MPR was used therefore for this band.

*) EUT operating mode no. is used to simplify the test report.

3.6. Configuration of cables used for testing

Cable number	Item	Type	S/N serial number	HW hardware status	Cable length
Cable 1	Antenna line TRX	--	--	--	2.70 m
Cable 2	Antenna line DRX	--	--	--	4.00 m
Cable 3	Reduced cable harness	--	--	--	1,80 m

4. Description of test system set-up's

4.1. Test system set-up for conducted measurements on antenna port

Specification: ANSI 63.10:2009

General Description: The EUT's RF-signal is coupled out by a suitable antenna coupling connector (1). The signal is first attenuated (2) before it is 0° divided by a power divider (3). One of the signal path is connected to the radio communication tester (4), other branch is connected to the spectrum – analyzer (5). The specific attenuation losses for both signal paths/branches are determined prior to the measurement within a set-up calibration. These are then taken into account by correcting the measurement readings on the spectrum-analyzer.

Schematic:

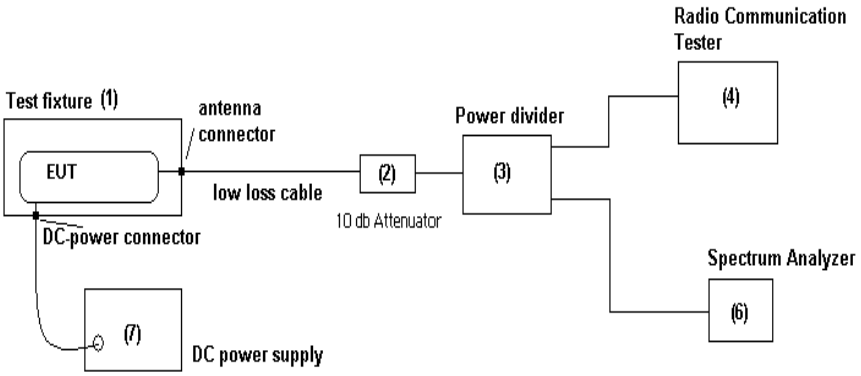

Testing method: ANSI 63.10:2009

4.2. Test system set-up for radiated magnetic field measurements below 30 MHz

Specification: ANSI C63.4-2009 chapter 8.2.1, ANSI C63.10-2009 chapter 6.4

General Description: Evaluating the radiated field emissions are done first by an exploratory emission measurement and a final measurement for most critical frequencies determined.

The loop antenna was placed at 1 m height above ground plane and 3 m measurement distance from set-up for investigations. Because of reduced measurement distance, correction data were applied, as stated in chapter "General Limit - Radiated field strength emissions below 30 MHz". The tests are performed in the semi anechoic room recognized by the regulatory commission.

Schematic:

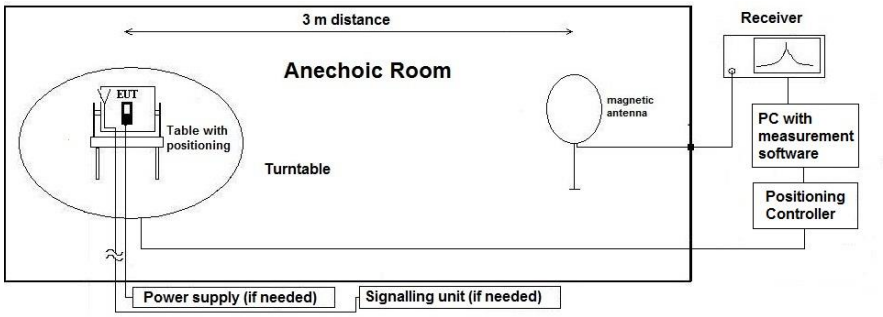

Testing method:

Exploratory, preliminary measurement
The EUT and it's associated accessories are placed on a non-conductive position manipulator (tipping device) of 0.8 m height which is placed on the turntable. By rotating the turntable (step 90°, range 0°to 360°) and the EUT itself either on 3-orthogonal axis (portable equipment) or 2-orthogonal axis (defined operational position of EUT), the emission spectrum was recorded. The loop antenna was moved at least to 2-perpendicular axes (antenna vector in direction of EUT and parallel to EUT) in order to maximize the emissions. The results are documented in a diagram. Critical frequencies (low margin to limit) are saved within a data reduction table for further investigations. If various operating modes are supported, further investigations are made to find the worst-case. Also the interconnection cables and equipment position were varied in order to maximize the emissions.

Final measurement on critical frequencies
Based on the exploratory measurements, the most critical frequencies are re-measured by maintaining the EUT's worst-case operation mode, cable position, etc.

First a frequency zoom around the critical frequency is done to locate the frequency more precisely. After this step, for all identified critical frequencies, the maximum peak was determined.

Following parameters were varied: the turntable angle continuously in the range 0 to 360 degree, the EUT itself either over 3-orthogonal axis (not defined usage position) or 2-orthogonal axis (defined usage position).

On the determined worst-case position, a final measurement with necessary bandwidth and detector according standard has been carried out.

Formula:

$E_C = E_R + AF + C_L + D_F - G_A$

$M = L_T - E_C$

AF =Antenna factor
C_L = Cable loss
D_F= Distance correction factor
E_C = Electrical field – corrected value
E_R = Receiver reading
G_A= Gain of pre-amplifier (if used)
L_T = Limit
M = Margin

All units are dB-units, positive margin means value is below limit.

Distance correction: Reference for applied correction (extrapolating) factors:
IEEC Transaction EMC, Vol. 47, No. 3 , Aug. 2005, Journal Paper
"*Extrapolating Near-field emissions of low frequency loop transmitters*".

4.3. Test system set-up for radiated spurious emission measurements

Specification: ANSI C63.4-2009 chapter 8, ANSI C63.10-2009 chapter 6.5&6.6

General Description: Evaluating the field emissions have to be done first by an exploratory emissions measurement and a final measurement for most critical frequencies. The tests are performed in a CISPR 16-4 compliant fully anechoic room (FAR) recognized by the regulatory commission. The measurement distance was set to 3 meter for frequencies up to 20 GHz and 1 meter above 20 GHz. A logarithmic periodic antenna is used for the frequency range 30 MHz to 1 GHz. The horn antenna is used for frequency range 1 GHz to 40 GHz. Due to use of a fully anechoic room the measurement antennas are set to fixed antenna height of 1.55 m (no height scan necessary) and the site validation criteria accord. ANSI63.10:2009 is fulfilled. The EUT is aligned within 3 dB beam width of the measurement antenna, on big EUTs several surface measurements are performed.

Schematic:

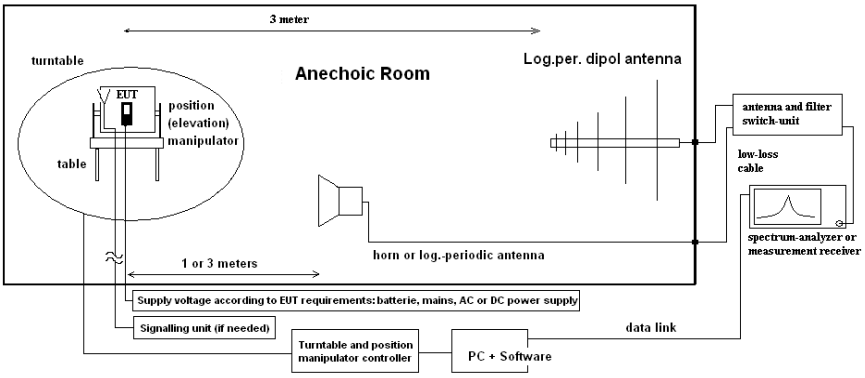

Testing method:

Exploratory, preliminary measurements
The EUT and its associated accessories are placed on a non-conductive position manipulator (tipping device) of 1.55 m height which is placed on the turntable. By rotating the turntable (range 0° to 360°, step 45°) and the EUT itself either on 3-orthogonal axis (portable equipment) or 2-orthogonal axis (defined operational position of EUT) the emission spectrum and it's characteristics was recorded with an EMI-receiver, broadband antenna and software.
The measurements are performed in horizontal and vertical polarization of the measurement antennas. The results are documented in a diagram. Critical frequencies (low margin to limit) are saved within a table for further investigations. If various operating modes are supported, further investigations are made to find the worst-case of them. Also the interconnection cables and equipment position were varied in order to maximize the emissions.

Final measurement on critical frequencies
Based on the exploratory measurements, the most critical frequencies are re-measured by maintaining the EUT's worst-case operation mode, cable position, etc.
First a frequency zoom around the critical frequency is done to locate the frequency more precisely. After this step, for all identified critical frequencies, the maximum peak was determined.
Following parameters were varied: the turntable angle continuously in the range 0 to 360 degree, the EUT itself either over 3-orthogonal axis (not defined usage position) or 2-orthogonal axis (defined usage position). The measurement antenna height is fixed to 1.55 m.
On the determined worst-case position, a final measurement with necessary bandwidth and detector according standard has been carried out.
The readings on the spectrum analyzer are corrected with conversion value between field strength and E(I)RP, so the readings shown are equivalent to ERP/EIRP values. Critical measurements near the limit are re-measured with a substitution method accord. ANSI/TIA/EIA 603 C/D

Formula:

$E_C = E_R + AF + C_L + D_F - G_A$ (1)

$Ec_{E(I)RP} = Ec - 95.2$ dB

$M = L_T - Ec_{E(I)RP}$

E_C = Electrical field – corrected value
E_R = Receiver reading
M = Margin
L_T = Limit
AF = Antenna factor
C_L = Cable loss
D_F = Distance correction factor (if used)
G_A = Gain of pre-amplifier (if used)
$Ec_{E(I)RP}$ = Electrical field corrected for E(I)RP

All units are dB-units, positive margin means value is below limit.

5. Measurements

5.1. General Limit - Radiated field strength emissions below 30 MHz

5.1.1. Test location and equipment

test location	☒ CETECOM Essen (Chapter. 2.2.1)		☐ Please see Chapter. 2.2.2		☐ Please see Chapter. 2.2.3	
test site	☒ 441 EMI SAR	☐ 487 SAR NSA	☐ 347 Radio.lab.		☐	☐
receiver	☐ 377 ESCS30	☒ 001 ESS	☐	☐	☐	☐
spectr. analys.	☐ 584 FSU	☐ 120 FSEM	☐ 264 FSEK	☐	☐	☐
antenna	☐ 574 BTA-L	☐ 133 EMCO3115	☐ 302 BBHA9170	☐ 289 CBL 6141	☒ 030 HFH-Z2	☐ 477 GPS
signaling	☐ 392 MT8820A	☐ 371 CBT32	☐ 547 CMU	☒ 594 CMW500		
otherwise	☐ 400 FTC40x15E	☐ 401 FTC40x15E	☐ 110 USB LWL	☐ 482 Filter Matrix	☐ 378 RadiSense	
DC power	☒ 456 EA 3013A	☐ 457 EA 3013A	☐ 459 EA 2032-50	☐ 268 EA- 3050	☐ 494 AG6632A	☐ 498 NGPE 40
line voltage	☐ 230 V 50 Hz via public mains		☐ 060 120 V 60 Hz via PAS 5000			

5.1.2. Requirements

FCC	Part 15, Subpart C, §15.205 & §15.209			
ANSI	C63.10-2009			
Frequency [MHz]	Field strength limit [µV/m]	[dBµV/m]	Distance [m]	Remarks
0.009 – 0.490	2400/f (kHz)	67.6 – 20Log(f) (kHz)	300	Correction factor used due to measurement distance of 3 m
0.490 – 1.705	24000/f (kHz)	87.6 – 20Log(f) (kHz)	30	Correction factor used due to measurement distance of 3 m
1.705 – 30	30	29.5	30	Correction factor used due to measurement distance of 3 m

5.1.3. Test condition and test set-up

Signal link to test system (if used):		☒ air link	☐ cable connection	☐ none
EUT-grounding		☒ none	☐ with power supply	☐ additional connection
Equipment set up		☒ table top		☐ floor standing
Climatic conditions		Temperature: (22±3°C)		Rel. humidity: (40±20)%
EMI-Receiver or Analyzer Settings	Scan data	☒ 9 – 150 kHz RBW/VBW = 200 Hz Scan step = 80 Hz ☒ 150 kHz – 30 MHz RBW/VBW = 9 kHz Scan step = 4 kHz ☐ other:		
	Scan-Mode Detector Mode: Sweep-Time	☒ 6 dB EMI-Receiver Mode ☐ 3dB Spectrum analyser Mode Peak (pre-measurement) and Quasi-PK/Average (final if applicable) Repetitive-Scan, max-hold Coupled – calibrated display if continuous signal otherwise adapted to EUT's individual transmission duty-cycle		
General measurement procedures		Please see chapter "Test system set-up radiated magnetic field measurements below 30 MHz"		

5.1.4. Measurement Results

The results are presented below in summary form only. The EUT is put on operation on middle channel only. If critical peaks are found (Margin <10 dB) the lowest and highest channels will be performed too. For more information please see the diagrams in annex 4.

Table of measurement results:

Diagram No.	Carrier Channel				Frequency range	Set-up no.	OP-mode no.	Remark	Used detector			Result
	No.	BW [MHz]	RB	Mod					PK	AV	QP	
2.15	21180 (2543.0MHz)	10	50	QPSK	9 kHz-30 MHz	1	1	Signal BW=10MHz	☒	☐	☐	passed
2.15a	21075 (2532.5MHz)	5	25	QPSK	9 kHz-30 MHz	1	1	Signal BW=10MHz	☒	☐	☐	passed

Remark: see results in annex 4

5.1.5. Correction factors due to reduced meas. distance (f< 30 MHz)

The used correction factors when the measurement distance is reduced, are taken from IEEC Transaction EMC, Vol 47, No.3, Aug. 2005, Journal Paper *"EXTRAPOLATING NEAR-FIELD EMISSIONS OF LOW-FREQUENCY LOOP TRANSMITTERS"*.

Used Transducer factors (f < 30 MHz)					
1	2	3	4	5	6
					=2+3+4+5
Frequency	Antenna factor	Corection factor		Cable loss	Transducer factor
		300m to 3m	30m to 3m		
kHz	dB µV/m	dB	dB	dB	dB µV/m
9,0	20,0	-116,7		0,0	-96,7
10,6	20,0	-116,7		0,0	-96,7
12,6	20,0	-116,7		0,0	-96,7
14,8	20,0	-116,7		0,0	-96,7
17,5	20,0	-116,6		0,0	-96,6
20,7	20,0	-116,6		0,0	-96,6
24,4	20,0	-116,6		0,0	-96,6
28,9	20,0	-116,6		0,0	-96,6
34,1	20,0	-116,5		0,0	-96,5
40,3	20,0	-116,4		0,0	-96,4
47,6	20,0	-116,3		0,0	-96,3
56,2	20,0	-116,2		0,0	-96,2
66,4	20,0	-116,0		0,0	-96,0
78,4	20,0	-115,8		0,0	-95,8
92,7	20,0	-115,4		0,0	-95,4
109,4	20,0	-115,0		0,0	-95,0
129,3	20,0	-114,5		0,0	-94,5
152,7	20,0	-113,9		0,0	-93,9
180,4	20,0	-113,1		0,0	-93,1
213,1	20,0	-112,2		0,0	-92,2
251,7	20,0	-111,3		0,0	-91,3
297,3	20,0	-108,3		0,0	-88,3
351,2	20,0	-105,2		0,0	-85,2
414,8	20,0	-102,1		0,0	-82,1
490,0	20,0	-99,1		0,0	-79,1
490,0	20,0		-56,4	0,1	-36,3
582,0	20,0		-56,2	0,1	-36,1
690,0	20,0		-56,0	0,2	-35,8
820,0	20,0		-55,7	0,2	-35,5
973,0	20,0		-55,4	0,2	-35,2
1.155,0	20,0		-54,9	0,3	-34,6
1.371,0	20,0		-54,4	0,3	-34,1
1.627,0	20,0		-53,7	0,3	-33,4
1.931,0	20,0		-52,9	0,4	-32,5
2.292,0	20,0		-52,0	0,4	-31,6
2.721,0	20,0		-49,8	0,5	-29,3
3.230,0	20,0		-46,6	0,5	-26,1
3.834,0	20,0		-43,3	0,6	-22,7
4.551,0	20,0		-40,1	0,6	-19,5
5.402,0	20,0		-36,8	0,7	-16,1
6.412,0	20,0		-33,5	0,7	-12,8
7.612,0	20,0		-30,3	0,8	-9,5
9.035,0	20,0		-27,0	0,8	-6,2
10.725,0	20,0		-23,9	0,9	-3,0
12.730,0	20,0		-21,2	0,9	-0,3
15.111,0	20,0		-19,3	1,0	1,7
17.937,0	20,0		-18,4	1,0	2,6
21.292,0	20,0		-18,2	1,1	2,9
25.274,0	20,0		-18,3	1,1	2,8
30.000,0	20,0		-18,4	1,2	2,8

5.2. RF-Parameter - Radiated out of Band RF emissions and Band Edge

5.2.1. Test location and equipments (for reference numbers please see chapter 'List of test equipment')

test location	☒ CETECOM Essen (Chapter. 2.2.1)		☐ Please see Chapter. 2.2.2		☐ Please see Chapter. 2.2.3	
test site	☐ 441 EMI SAR	☐ 487 SAR NSA	☒ 443 FAR	☐ 347 Radio.lab.1	☐ 347 Radio.lab.2	
receiver	☐ 377 ESCS30	☐ 001 ESS	☐ 489 ESU 40	☐ ESU 26		
spectr. analys.	☐ 584 FSU	☐ 120 FSEM	☒ 264 FSEK			
antenna	☒ 439 HL 562	☒ 549 HL 025	☐ 302 BBHA9170	☐ 289 CBL 6141	☐ 030 HFH-Z2	☐ 477 GPS
signaling	☐ 017 CMD 65	☐ 323 CMD 55	☐ 340 CMD 55			
signaling	☐ 392 MT8820A	☐ 546 CMU	☐ 547 CMU	☒ 594 CMW500		
power supply	☒ 611 E3632A	☐ 457 EA 3013A	☐ 459 EA 2032-50	☐ 268 EA- 3050	☐ 494 AG6632A	☐ 498 NGPE 40
otherwise	☐ 529 6dB divider	☐ 530 6dB Att.	☐ 110 USB LWL	☐ 482 Filter Matrix	☐ 431 Near field	
line voltage	☐ 230 V 50 Hz via public mains		☐ 060 110 V/ 60 Hz via PAS 5000			

5.2.2. Requirements and limits

FCC	§2.1053, §2.1057, §27.53(m)(4)(6)
Limit	for CHE±5MHz ≤ f ≤ CHE±5MHz 40+10log(P) dBc [1.)] for 2490,5MHz < f < 2496MHz 43+10log(P) dBc for f ≤ 2490,5MHz 55+10log(P) dBc

Remark:
1.) "*(4)* For mobile digital stations, the attenuation factor shall be not less than 40 + 10 log (P) dB on all frequencies between the channel edge and 5 megahertz from the channel edge, 43 + 10 log (P) dB on all frequencies between 5 megahertz and X megahertz from the channel edge, and 55 + 10 log (P) dB on all frequencies more than X megahertz from the channel edge, where X is the greater of 6 megahertz or the actual emission bandwidth as defined in paragraph (m)(6) of this section. In addition, the attenuation factor shall not be less that 43 + 10 log (P) dB on all frequencies between 2490.5 MHz and 2496 MHz and 55 + 10 log (P) dB at or below 2490.5 MHz. Mobile Satellite Service licensees operating on frequencies below 2495 MHz may also submit a documented interference complaint against BRS licensees operating on channel BRS Channel 1 on the same terms and conditions as adjacent channel BRS or EBS licensees." dated 2014-07-16

5.2.3. Test condition and test set-up

link to test system (if used):	☒ air link	☐ cable connection	☐
EUT-grounding	☒ none	☐ with power supply	☐ additional connection
Equipment set up	☒ table top		☐ floor standing
Climatic conditions	Temperature: (22±3°C)		Rel. humidity: (40±20)%
Test system set-up	Please see chapter "Test system set-up for radiated spurious emission measurements up to 20 GHz"		
Measurement method	**OOB-Emissions:** The spectrum was scanned from 9 kHz to the 10th harmonic of the highest frequency generated within the equipment. A PEAK detector was used except measurements near the Band-Edge where a AVERAGE detector applied when results are critical (low margin or limit exceed). Tests have been performed in various settings for the device regarding allocated ressource blocks and channels in order to find worst-case configuration. Due to very big amount of possible combinations only certain combinations have been tested. **Band-Edge Emissions:** Either an integrated BW method or a conventional frequency sweep method was used for band-edge compliance. Details on the diagrams in annex 4.		
EUT settings	A call was established on highest power transmit conditions in RMC mode. MPR was deactivated. The measurements were made at the low, middle and high carrier frequencies of each of the supported operating band within the designated range within the allowed channel bandwidths. Choosing three TX-carrier frequencies of the EUT, should be sufficient to demonstrate compliance.		

5.2.4. Spectrum-analyser settings for LTE Band 7

	Start freq. MHz	Stop freq. MHz	R-BW MHz	V-BW MHz	Sweep time sec.	Att.	Detector
Sweep 1 (subrange 1)	30	1000	1	1	10	10	MaxH-PK / MaxH-AV
Sweep 1 (subrange 2)	1000	2800	1	1	15	0	MaxH-PK / MaxH-AV
Sweep 1 (subrange 3)	2800	18000	1	1	160	10	MaxH-PK / MaxH-AV
Sweep 2a (Band-Edge low)	2485	2496	1MHz	3MHz	10	35	MaxH-PK / MaxH-AV
Sweep 2b (Band-Edge high)	2572	2595	1 MHz	3MHz	10	35	MaxH-PK / MaxH-AV

Remark: none

5.2.5. Results

The results are presented below in summary form only. For more information please see the diagrams enclosed in annex 4.

5.2.5.1. LTE Band 7: Op. Mode 1 Set-up 1 and 2

Dia-gram no.	Carrier Channel		Measured frequency range	OP-mode no.*1)	Remark	Used detector			Result
	Range	No.				PK	AV	QP	
8.071a 8.071b	Low	20775 (2502,5MHz)	30 MHz to 2.8 GHz	1	Carrier visible on diagram. Not relevant for results	☐	☒	☐	passed
8.075a 8.075b			2.8 GHz to 18GHz	1	--	☐	☒	☐	passed
8.079a 8.079b	Low	20775 (2502,5MHz)	18 GHz to 26.5 GHz	1	--	☐	☒	☐	passed
9.01 9.02 9.05 9.07 9.09 9.10 9.13 9.14	Low	20775 (2502,5MHz) 20800 (2505,0MHz)	2485 - 2496 MHz	1	Band Edge Compliance QPSK modulation *2)	☒	☒	☐	passed
9.03 9.04 9.06 9.08 9.11 9.12 9.15 9.16	Low	20825 (2507,5MHz) 20850 (2510,0MHz)	2485 - 2496 MHz	1	Band Edge Compliance 16-QAM modulation *2)	☒	☒	☐	passed
8.072a 8.072b 8.073a 8.073b	Mid	21075 (2532,5MHz) 21180 (2543,0MHz) 21200 (2545,0MHz)	30 MHz to 2.8 GHz	1	Carrier visible on diagram. Not relevant for results	☐	☒	☐	passed
8.076a 8.076b 8.077a 8.077b			2.8 GHz to 18GHz	1	--	☐	☒	☐	passed
8.080a 8.080b 8.081a 8.081b 8.082a 8.082b			18 GHz to 26.5 GHz	1	--	☐	☒	☐	passed
8.074a 8.074b	High	21400 (2565,0MHz)	30 MHz to 2.8 GHz	1	Carrier visible on diagram. Not relevant for results	☐	☒	☐	passed
8.078a 8.078b			2.8 GHz to 18GHz	1	--	☐	☒	☐	passed
8.083a 8.083b	High	21400 (2565,0MHz)	18 GHz to 26.5 GHz	1	--	☐	☒	☐	passed

Table continues on the next page

Remark: *1.)Please see test measurement in annex 4 - diagrams and values for detailed overview of the tested operating mode.
*2.) see band-edge measurements in annex 4 - diagrams and values. Different bandwidths and modulations have been tested in order to find worst-case

Dia-gram no.	Carrier Channel		Measured Frequency range	OP-mode no.*1)	Remark	Used detector			Result
	Range	No.				PK	AV	QP	
9.17 9.18 9.21 9.22 9.25 9.26 9.29 9.30	High	21425 (2567,5MHz) 21400 (2565,0MHz)	2572 -2595 MHz	1	Band Edge Compliance QPSK modulation *2)	☒	☒	☐	passed
9.19 9.20 9.23 9.24 9.27 9.28 9.31 9.32	High	21375 (2562,5MHz) 21350 (2560,0MHz)	2572 -2595 MHz	1	Band Edge Compliance 16-QAM modulation *2)	☒	☒	☐	passed

Remark: *1.)Please see test measurement in annex 4 - diagrams and values for detailed overview of the tested operating mode.
*2.) see band-edge measurements in annex 4 - diagrams and values. Different bandwidths and modulations have been tested in order to find worst-case

5.3. RF-Parameter - RF Peak power output conducted

5.3.1. Test location and equipments (for reference numbers please see chapter 'List of test equipment')

test location	☒ CETECOM Essen (Chapter. 2.2.1)		☐ Please see Chapter. 2.2.2			
test site	☐ 347 Radio.lab. 1	☒ Radio.lab. 2				
spectr. analys.	☐ 584 FSU	☐ 489 ESU 40	☐ 264 FSEK	☐ 620 ESU 26		
signaling	☐ 392 MT8820A	☐ 436 CMU	☐ 547 CMU	☒ 594 CMW500		
otherwise	☐ 400 FTC40x15E	☐ 401 FTC40x15E	☐ 110 USB LWL	☐ 482 Filter Matrix	☐ 378 RadiSense	
DC power	☐ 456 EA 3013A	☐ 463 HP3245A	☐ 459 EA 2032-50	☐ 268 EA- 3050	☐ 494 AG6632A	☒ 611 E3632A
otherwise	☐ 331 HC 4055	☐ 248 6 dB Att.	☐ 529 Power div.	☐ - cable OTA20		☒ 530 10 dB Att.
line voltage	☐ 230 V 50 Hz via public mains		☐ 060 110 V/ 60 Hz via PAS 5000			

5.3.2. Requirements

FCC	§2.1046, §27.50(h)(2) for LTE Band 7
Limit	Maximum Power Output of the EUT should be determined while measured conducted.
	Limit LTE Band 7: 2 Watt EIRP (33.0 dBm)

5.3.3. Test condition and test set-up

Climatic conditions	Temperature: (22±3°C)	Rel. humidity: (40±20)%
Test system set-up	Please see chapter “Test system set-up for conducted measurements on antenna port”	
Measurement method	The measurements were performed with the integrated power measurement function of the „radio communication tester CMW500 from Rohde&Schwarz company. In this way spectrum-analyzers instrument limitations can be avoided or minimized. Instead, CMW manufacturers declared measurement error can be considered for this measurement. The attenuation (insertion loss) at the RF Inputs/Outputs of CMW were set according the path loss of the test set-up, determined in a step before starting the measurements. A suitable artificial antenna or RF-connector is provided by the applicant in order to perform the conducted measurements. Any data provided with the artificial antenna or connector, have been taken in account in order to correct the measurement data. (typical 0.3dB for attenuation of antenna connector) Peak and Average Values have been recorded for each channel and band.	
EUT settings	A call was established with a suitable communication test unit (CMW500). The EUT is set TX mode, highest transmit power conditions (RMC-mode), power saving techniques have been disabled (MPR-techniques) Tests have been performed in different EUT bandwidth settings and various settings for allocated RBs. The measurements were made at the low, middle and high carrier frequencies of each of the supported operating band within the designated range within the allowed channel bandwidths. Choosing three TX-carrier frequencies of the EUT, should be sufficient to demonstrate compliance.	

5.3.4. Measurement Results for RF Peak output power - conducted

5.3.4.1. LTE Band 7 Results

LTE-Band 7 (FCC Part 27)				QPSK-Modulation			16-QAM-Modulation					
Ch. BW	ARFCN ch. no.	ARFCN-Frequency [MHz]	Resource block allocation	Peak detector [dBm]	RMS detector [dBm]	PAR Factor [dB]	Peak detector [dBm]	RMS detector [dBm]	PAR Factor [dB]	max- modulation	max. channel	absolute max. value
5 MHz	20775	2502,5	1 RB low	28.02	22.79	5.23	27.77	22.51	5.26	28.43		
			1 RB high	**28.43**	23.11	5.32	27.61	22.18	5.43			
			50% RB mid	28.21	21.62	6.59	27.82	20.69	7.13			
			100% RB	28.3	21.63	6.67	28.37	20.59	7.78			
	21100	2535,0	1 RB low	27.74	22.69	5.05	27.99	21.41	6.58	**29.01**	**29.01**	
			1 RB high	27.82	22.72	5.1	27.98	21.38	6.6			
			50% RB mid	28.86	21.8	7.06	28.5	20.74	7.76			
			100% RB	28.7	21.71	6.99	**29.01**	20.82	8.19			
	21425	2567,5	1 RB low	27.92	22.68	5.24	**28.24**	22.04	6.2	28.24		
			1 RB high	27.67	22.07	5.6	28.22	21.48	6.74			
			50% RB mid	27.31	21.36	5.95	27.5	20.54	6.96			
			100% RB	28.14	21.2	6.94	28.05	20.33	7.72			
10 MHz	20800	2505,0	1 RB low	27.71	22.67	5.04	28.23	21.55	6.68	28.62	28.62	**29.01**
			1 RB high	27.96	22.85	5.11	28.55	21.56	6.99			
			50% RB mid	28.32	21.58	6.74	28.51	20.85	7.66			
			100% RB	28.1	21.44	6.66	**28.62**	20.53	8.09			
	21000	2525,0	1 RB low	27.87	22.87	5	27.72	22.14	5.58	28.42		
			1 RB high	28.33	22.74	5.59	28.06	21.97	6.09			
			50% RB mid	28.03	21.83	6.2	27.9	20.93	6.97			
			100% RB	**28.42**	21.81	6.61	28.34	20.93	7.41			
	21400	2565,0	1 RB low	27.35	22.81	4.54	27.4	21.59	5.81	28.21		
			1 RB high	27.21	22.21	5	27.09	20.68	6.41			
			50% RB mid	27.99	21.48	6.51	28.17	20.61	7.56			
			100% RB	**28.21**	21.36	6.85	**28.21**	20.42	7.79			
15 MHz	20825	2507,5	1 RB low	28.15	22.84	5.31	27.84	21.95	5.89	28.34	28.81	
			1 RB high	28.13	22.95	5.18	27.89	22.1	5.79			
			50% RB mid	28.11	21.47	6.64	**28.34**	20.64	7.7			
			100% RB	28.28	21.47	6.81	27.96	20.58	7.38			
	21100	2535,0	1 RB low	28.01	22.83	5.18	28.36	22.2	6.16	28.81		
			1 RB high	28.04	22.65	5.39	**28.81**	22.03	6.78			
			50% RB mid	28.42	21.49	6.93	28.68	20.47	8.21			
			100% RB	28.38	21.31	7.07	28.53	20.41	8.12			
	21375	2562,5	1 RB low	27.48	22.8	4.68	27.88	21.85	6.03	28.66		
			1 RB high	27.24	21.91	5.33	28.07	21.02	7.05			
			50% RB mid	27.72	21.49	6.23	27.88	20.65	7.23			
			100% RB	**28.66**	21.39	7.27	28.1	20.47	7.63			

Table continues on the next page

Table continues from the previous page

LTE-Band 7 (FCC Part 27)				QPSK-Modulation			16-QAM-Modulation					
ch. BW	ARFCN ch. no.	ARFCN-Frequency [MHz]	Resource block allocation	Peak detector [dBm]	RMS detector [dBm]	PAR Factor [dB]	Peak detector [dBm]	RMS detector [dBm]	PAR Factor [dB]	max- modulation [dBm]	max. channel [dBm]	absolute max. value [dBm]
20 MHz	20850	2510,0	1 RB low	28.29	22.8	5.49	28.31	22	6.31	28,50	28,81	**29.01**
			1 RB high	27.94	22.9	5.04	28.00	22.11	5.89			
			50% RB mid	27.98	21.47	6.51	**28.5**	20.63	7.87			
			100% RB	28.4	21.58	6.82	28.05	20.61	7.44			
	21100	2535,0	1 RB low	28.17	22.77	5.4	28.02	21.95	6.07	**28,81**		
			1 RB high	28.74	22.61	6.13	28.2	21.7	6.5			
			50% RB mid	28.74	21.45	7.29	**28.81**	20.46	8.35			
			100% RB	28.55	21.45	7.1	28.56	20.44	8.12			
	21350	2560,0	1 RB low	28.14	23.11	5.03	27.05	21.99	5.06	28,45		
			1 RB high	27.72	21.96	5.76	26.81	21.42	5.39			
			50% RB mid	27.88	21.57	6.31	27.87	20.58	7.29			
			100% RB	28.02	21.56	6.46	**28.45**	20.55	7.9			

Maximum conducted power value: **29.01 dBm**

5.4. RF-Parameter - RF Peak power output radiated

5.4.1. Test location and equipment (for reference numbers please see chapter 'List of test equipment')

test location	☒ CETECOM Essen (Chapter. 2.2.1)		☐ Please see Chapter. 2.2.2		☐ Please see Chapter. 2.2.3	
test site	☐ 441 EMI SAR	☐ 487 SAR NSA	☐ 443 FAR	☒ 557 OTA2	☐	☐
receiver	☐ 377 ESCS30	☒ 690 FSU26	☐ 489 ESU 40	☐ 620 ESU 26	☐	☐
spectr. analys.	☐ 584 FSU	☐ 120 FSEM	☒ 264 FSEK	☐	☐	☐
antenna	☐ 574 BTA-L	☐ 133 EMCO3115	☐ 302 BBHA9170	☒ 439 HL 562	☒ 549 HL025	
signalling	☐ 392 MT8820A	☐ 436 CMU	☒ 546 CMU			
otherwise	☐ 400 FTC40x15E	☐ 401 FTC40x15E	☐ 110 USB LWL	☐ 482 Filter Matrix	☐ 378 RadiSense	
DC power	☐ 456 EA 3013A	☒ 463 HP3245A	☐ 459 EA 2032-50	☐ 268 EA- 3050	☐ 494 AG6632A	☐ 498 NGPE 40
line voltage	☐ 230 V 50 Hz via public mains		☐ 060 110 V/ 60 Hz via PAS 5000			

5.4.2. Requirements and limits

FCC	§2.1046(a), §27.50(h)(2)
Limit	Maximum Power Output of the EUT should be determined while measured radiated E(I)RP.
	Limit LTE Band 7: 2 Watt EIRP for mobile stations (33.0 dBm)

5.4.3. Test condition and test set-up

link to test system (if used):		☒ air link	☐ cable connection	☐
EUT-grounding		☒ none	☐ with power supply	☐ additional connection
Equipment set up		☒ table top		☐ floor standing
Climatic conditions		Temperature: (22±3°C)		Rel. humidity: (40±20)%
Test system set-up		Please see chapter "Test system set-up for radiated spurious emission measurements up to 20 GHz"		
Spectrum Analyzer Settings	**Parameter:** Scan Mode Span RBW VBW Sweep time Sweep mode Detector	 Spectrum analyser mode 100 MHz 10 MHz 10 MHz Coupled repetitive Peak		
Measurement method		The measurements were performed by using the **substitution method** (ANSI/TIA/EIA 603C/D) with a spectrum-analyzer. This method can be described like follows: 1. choosing of suitable spectrum-analyzer settings for performing the measurements. This settings of the spectrum analyzer must be maintained for both stages of the measurements: EUT emission measurements and also for measurements of the substituted level. 2. The maximum level of the peak power was recorded, while the emissions were maximized by rotating the EUT in three orthogonal axes, which was situated on a non-conductive turntable of 1.55 m height ($P_{MEAS,1}$). This was performed for both measuring antenna polarisations (vertical/horizontal), the maximum of both values is used for further measurements and final substitution ($P_{MEAS,\ 1,\ MAX}$). 3. As the maximum emission is recorded, the EUT is replaced by a frequency dependant suitable antenna, which is connected to a RF-signal generator, which is transmitting on the determined worst-case frequency as determined in step 2. 4. The RF-signal level of the signal generator is adjusted as long the same worst-case level determined first step is measured at the spectrum analyzer ($P_{SMHU}=P_{MEAS,1,\ MAX}$) 5. Than the RF-signal cable is disconnected from the antenna and connected to a power-level meter. The level is determined ($P_{MEAS,2}$). 6. The final result is calculated by adding the ERP/EIRP gain of the antenna which substitutes the EUT. $P_{EUT,SUBST} = P_{MEAS,2} + G_{ANTENNA}$		
EUT settings		A call was established on highest power transmit conditions in RMC mode. MPR was deactivated. The measurements were made at the low, middle and high carrier frequencies of each of the supported operating band within the designated range within the allowed channel bandwidths. Choosing three TX-carrier frequencies of the EUT, should be sufficient to demonstrate compliance.		

5.4.4. Measurement Results for RF Peak output power - radiated

EUT					Set-up 3, Op. Mode 1			
Channel BW [MHz]	Channel				Peak Output Power (EIRP) [dBm]		Antenna Polarization for maximum Power	Result
	ARFCN ch. no.	ARFCN-Frequency [MHz]	Resource block allocation	Modulation	PK	AV		
5	21100	2535.0	50% RB mid	QPSK	27.6	1.)	V&H	passed
	21100	2535.0	100%	16-QAM	**29.1**	1.)		
10	21100	2535.0	100%	QPSK	24.8	1.)	V&H	passed
	20800	2505.0	100%	16-QAM	25.6	1.)		
15	21375	2562.5	100%	QPSK	25.3	1.)	V&H	passed
	21100	2535.0	1RB high	16-QAM	25.1	1.)		
20	21100	2535.0	1 RB high	QPSK	25.7	1.)	V&H	passed
	21100	2535.0	50% RB mid	16-QAM	25.3	1.)		

Remark: 1.) see conducted measurements for PAR factor

5.5. RF-Parameter - Conducted out of Band RF emissions and Band Edge

5.5.1. Test location and equipments (for reference numbers please see chapter 'List of test equipment')

test location	☒ CETECOM Essen (Chapter. 2.2.1)		☐ Please see Chapter. 2.2.2		☐ Please see Chapter. 2.2.3	
test site	☐ 347 Radio.lab. 1	☒ Radio.lab. 2				
spectr. analys.	☐ 584 FSU	☐ 120 FSEM	☐ 264 FSEK	☒ 620 ESU26		
signaling	☐ 017 CMD 65	☐ 323 CMD 55	☐ 340 CMD 55			
signaling	☐ 392 MT8820A	☐ 436 CMU	☒ 594 CMW500			
power supply	☒ 611 E3632A	☐ 457 EA 3013A	☐ 459 EA 2032-50	☐ 268 EA- 3050	☐ 494 AG6632A	☐ 498 NGPE 40
otherwise	☒ 529 6dB divider	☒ 530 10dB Att.	☐ 431 Near field			
line voltage	☐ 230 V 50 Hz via public mains		☐ 060 110 V/ 60 Hz via PAS 5000			

5.5.2. Requirements and limits

FCC	§2.1051, §2.1057, §27.53(m)(4)(6)	
Limit	**old:** 43+10log(P) dBc [1.)] 55+10log(P) dBc	**new:** for CHE±5MHz ≤ f ≤ CHE±5MHz 40+10log(P) dBc [2.)] for 2490,5MHz < f < 2496MHz 43+10log(P) dBc for f ≤ 2490,5MHz 55+10log(P) dBc

Remark:
1.) used for measurements: "*(4)* For mobile digital stations, the attenuation factor shall be not less than 43 + 10 log (P) dB at the channel edge and 55 + 10 log (P) dB at 5.5 megahertz from the channel edges. Mobile Satellite Service licensees operating on frequencies below 2495 MHz may also submit a documented interference complaint against BRS licensees operating on channel BRS Channel 1 on the same terms and conditions as adjacent channel BRS or EBS licensees."
2.) "*(4)* For mobile digital stations, the attenuation factor shall be not less than 40 + 10 log (P) dB on all frequencies between the channel edge and 5 megahertz from the channel edge, 43 + 10 log (P) dB on all frequencies between 5 megahertz and X megahertz from the channel edge, and 55 + 10 log (P) dB on all frequencies more than X megahertz from the channel edge, where X is the greater of 6 megahertz or the actual emission bandwidth as defined in paragraph (m)(6) of this section. In addition, the attenuation factor shall not be less that 43 + 10 log (P) dB on all frequencies between 2490.5 MHz and 2496 MHz and 55 + 10 log (P) dB at or below 2490.5 MHz. Mobile Satellite Service licensees operating on frequencies below 2495 MHz may also submit a documented interference complaint against BRS licensees operating on channel BRS Channel 1 on the same terms and conditions as adjacent channel BRS or EBS licensees." dated 2014-07-16

5.5.3. Test condition and test set-up

Climatic conditions	Temperature: (22±3°C)	Rel. humidity: (40±20)%
Test system set-up	Please see chapter "Test system set-up for conducted measurements on antenna port"	
Measurement method	**OOB-Emissions:** The spectrum was scanned from 9 kHz to the 10th harmonic of the highest frequency generated within the equipment. A PEAK detector was used except measurements near the block-edge where a AVERAGE detector applied. A suitable artificial antenna or RF-connector is provided by the applicant in order to perform the conducted measurements. Any data provided with the artificial antenna or connector, have been taken in account in order to correct the measurement data. (typical 0.3dB for attenuation of antenna connector) **Band-Edge Emissions: A**n integrated BW method was used for band-edge compliance. Details on the diagrams in annex 4.	
Spectrum-Analyzer settings	See below tables	
EUT settings	A call was established with a suitable communication test unit (CMW500). The EUT is set TX mode, highest transmit power conditions (RMC-mode), power saving techniques have been disabled Tests have been performed in various settings for the device regarding allocated ressource blocks and channels in order to find worst-case configuration. Due to very big amount of possible combinations only certain combinations have been tested. The measurements were made at the low, middle and high carrier frequencies of each of the supported operating band. Choosing three TX-carrier frequencies of the EUT, should be sufficient to demonstrate compliance.	

5.5.4. Spectrum-Analyzer settings for LTE Band 7

	Start freq. MHz	Stop freq. MHz	R-BW kHz	V-BW MHz	Sweep time sec.	Att. [dB]	Detector
Sweep 1	0.009	0.150	0.0001	--[1.)]	10	25	MaxH-PK
Sweep 1	0.150	1	0.009	--[1.)]	10	25	MaxH-PK
Sweep 1	1	30	0.1	--[1.)]	5	25	MaxH-PK
Sweep 2	30	19500	1	--[1.)]	>60	35	MaxH-PK
Sweep 3a (Band-Edge)	2500	2506	1MHz	3MHz	30	35	MaxH-AV
Sweep 3b (Block-Edge)	2570	2576	1MHz	3MHz	30	35	MaxH-AV

Remark: 1.) EMI 6dB receiver mode used

5.5.5. Results

The results are presented below in summary form only. For more information please see diagrams enclosed in annex 4.

5.5.5.1. LTE Band 7: Op. Mode 1, Set-up 3 and 4

Dia-gram no.	Carrier Channel		Measured frequency range	OP-mode no.[*1.)]	Remark	Used detector			Result
	Range	No.				PK	AV	QP	
50.701 a	Low	20775 (2502.5MHz)	9kHz to 30MHz	1	QPSK modulation	☒	☐	☐	passed
50.702 a	Low		30 MHz to 19.5GHz		Carrier uplink (2500MHz) and downlink (2621MHz) visible on diagram, not relevant for results, QPSK modulation	☒	☐	☐	passed
50.701 b	Low	20775 (2502.5MHz)	9kHz to 30MHz		QAM modulation	☒	☐	☐	passed
50.702 b	Low		30 MHz to 19.5GHz		Carrier uplink (2500MHz) and downlink (2621MHz) visible on diagram, not relevant for results, QAM modulation	☒	☐	☐	passed
37.701 37.702 37.705 37.706 37.709 37.710 37.713 37.714	Low	20775 (2502.5MHz) 20800 (2505.0MHz)	2500 - 2506 MHz		Band-Edge compliance QPSK modulation, an integrated bandwidth method was used for measurement. Consult TX-channel value for first 1MHz near band-edge as well as Adjacent/alternate channels On LOWER-column for the results for frequency above1MHz from channel-edge.	☐	☒	☐	passed
37.703 37.704 37.707 37.708 37.711 37.712 37.715 37.716	Low	20825 (2507.5MHz) 20850 (2510.0MHz)	2500 - 2506 MHz		Band-Edge compliance QAM modulation, an integrated bandwidth method was used for measurement. Consult TX-channel value for first 1MHz near band-edge as well as Adjacent/alternate channels On LOWER-column for the results for frequency above1MHz from channel-edge.	☐	☒	☐	passed

Remark: *1.) Please see test measurement in annex 4 - diagrams and values for detailed overview of the tested operating mode.

Dia-gram no.	Carrier Channel		Measured frequency range	OP-mode no.*1.)	Remark	Used detector			Result
	Range	No.				PK	AV	QP	
50.703 a	Middle	21100 (2535.0MHz)	9kHz to 30MHz	1	QPSK modulation	☒	☐	☐	passed
50.704 a	Middle		30 MHz to 19.5GHz		Carrier uplink (2535MHz) and downlink (2652MHz) visible on diagram, not relevant for results, QPSK modulation	☒	☐	☐	passed
50.703 b	Middle		9kHz to 30MHz		QAM modulation	☒	☐	☐	passed
50.704 b	Middle		30 MHz to 19.5GHz		Carrier uplink (2535MHz) and downlink (2652MHz) visible on diagram, not relevant for results, QAM modulation	☒	☐	☐	passed
50.705 a	High		9kHz to 30MHz		QPSK Modulation	☒	☐	☐	passed
50.706 a	High		30 MHz to 19.5GHz		Carrier uplink (2565MHz) and downlink (2688MHz) visible on diagram, not relevant for results, QPSK modulation	☒	☐	☐	passed
50.705 b	High		9kHz to 30MHz		QAM modulation	☒	☐	☐	passed
50.706 b	High		30 MHz to 19.5GHz		Carrier uplink (2565MHz) and downlink (2688MHz) visible on diagram, not relevant for results, QAM modulation	☒	☐	☐	passed
37.766 37.767 37.768 37.769 37.770 37.771 37.772 37.773	High		2570 -2576 MHz		Band-Edge compliance QPSK modulation, an integrated bandwidth method was used for measurement. Consult TX-channel value for first 1MHz near band-edge as well as Adjacent/alternate channels On UPPER-column for the results for frequency above1MHz from channel-edge.	☐	☒	☐	passed
37.774 37.775 37.776 37.777 37.778 37.779 37.780 37.781	High		2570 -2576 MHz		Band-Edge compliance QAM modulation, an integrated bandwidth method was used for measurement. Consult TX-channel value for first 1MHz near band-edge as well as Adjacent/alternate channels On UPPER-column for the results for frequency above1MHz from channel-edge.	☐	☒	☐	passed

Remark: *1.) Please see test measurement in annex 4 - diagrams and values for detailed overview of the tested operating mode.

5.6. RF-Parameter - Occupied bandwidth and emission bandwidth

5.6.1. Test location and equipments (for reference numbers please see chapter 'List of test equipment')

test site	☐ 347 Radio.lab. 1	☒ Radio.lab. 2				
spectr. analys.	☐ 584 FSU8	☐ 489 ESU	☒ 620 ESU26	☐ 264 FSEK		
attenuator	☒ 530 10 dB	☐	☐			
signaling	☐ 392 MT8820A	☐ 436 CMU	☐ 547 CMU	☒ 594 CMW500		
DC Power	☒ 611 E3632A	☐ 087 EA3013	☐ 354 NGPE 40	☐ 086 LNG50-10	☒ 611 E3632A	
otherwise	☒ 529 6dB divider					
line voltage	☐ 230 V 50 Hz via public mains		☐ 060 110 V/ 60 Hz via PAS 5000			

5.6.2. Requirements and Limits

FCC	CFR47, §2.202(a), §2.1049, §27.53(m)(6)	„the **occupied bandwidth** is the frequency bandwidth, such that, below it lower and above it upper frequency limits, the mean powers radiated are each equal to 0.5 percent of the total mean power radiated"
ANSI	C63.10-2009	

5.6.3. Test condition and test set-up

Climatic conditions		Temperature: (22±3°C)	Rel. humidity: (40±20)%
Test system set-up		Please see chapter "Test system set-up for conducted measurements at antenna port"	
Spectrum Analyzer Settings	Parameter	Occupied bandwidth:	Emission bandwidth
	Scan Mode	Spectrum analyser mode	Spectrum analyser mode
	Span	1.8MHz/4MHz/6MHz /12MHz/17MHz/22MHz	2MHz/4MHz/7MHz /12MHz/17MHz/22MHz
	RBW	30kHz/50kHz/100kHz/	30kHz/50kHz/100kHz/
	VBW	500kHz/1MHz/	300 kHz/500kHz/1MHz/
	Sweep time	60 Sec	Coupled
	Sweep mode	Single max-hold	Repetitive, max-hold
	Detector	RMS	PK
Measurement method		The used spectrum analyzer FSE or ESU from Rohde & Schwarz contains an integrated function to calculate the occupied bandwidth automatically. From left and right display margin, the upper and lower frequency points where the accumulated power becomes 0.5% of the total power, are calculated. Subtracting the previous determined two frequency points, yields the occupied bandwidth.	Bandwidth defined between 2 markers with are 26dBc compared to highest In-Band Peak Emission.
EUT settings		A call was established with a suitable communication test unit (CMW500). The EUT is set TX mode, highest transmit power conditions (RMC-mode), power saving techniques have been disabled. All RBs as possible per EUT signal bandwidth have been allocated. The measurements were made at the low, middle and high carrier frequencies of each of the supported operating band. Choosing three TX-carrier frequencies of the EUT, should be sufficient to demonstrate compliance.	

5.6.4. Results
5.6.4.1. LTE Band 7: Op. Mode 1, Set-up 4

Test are performed at 100% resource blocks allocation as per bandwidth

Operational Band	Modulation	Signal bandwidth [MHz]	Channel no.		99%-Occupied bandwidth*1)		26 dBc Emission Bandwidth	
			Range	Channel no. (Frequency [MHz])	Diagram no.	Value [MHz]	Diagram no.	Value [MHz]
Band 7	QPSK	5	Low	**Ch20775** (2502.5)	35.701	--	34.701	4.9807
			Mid	**Ch21100** (2535)	35.702	4.4615	34.702	5.0961
			High	**Ch21425** (2567.5)	35.703	--	34.703	4.9711
		10	Low	**Ch20800** (2505)	35.704	--	34.704	9.8269
			Mid	**Ch21100** (2535)	35.705	--	34.705	9.8269
			High	**Ch21400** (2565)	35.706	8.9423	34.706	9.8653
		15	Low	**Ch20825** (2507.5)	35.707	13.3766	34.707	14.5753
			Mid	**Ch21100** (2535)	35.708	--	34.708	14.5480
			High	**Ch21375** 2562.5	35.709	--	34.709	14.5208
		20	low	**Ch20850** (2510)	35.710	--	34.710	19.0384
			Mid	**Ch21100** (2535)	35.711	--	34.711	19.1794
			High	**Ch21350** (2560)	35.712	17.8397	34.712	19.3910

Remark: see extract of diagrams with max. values in annex 4
*1) measured only in the worst case settings of 26 dBc Emission Bandwidth

Test are performed at 100% resource blocks allocation as per bandwidth

Operational Band	Modulation	Signal bandwidth [MHz]	Channel no.		99%-Occupied bandwidth*1)		26 dBc Emission Bandwidth	
			Range	Channel no. (Frequency [MHz])	Diagram no.	Value [MHz]	Diagram no.	Value [MHz]
Band 7	16-QAM	5	Low	**Ch20775** (2502.5)	35.713	--	34.713	5.0192
			Mid	**Ch21100** (2535)	35.714	4.4711	34.714	5.0673
			High	**Ch21425** (2567.5)	35.715	--	34.715	4.9807
		10	Low	**Ch20800** (2505)	35.716	--	34.716	9.7115
			Mid	**Ch21100** (2535)	35.717	--	34.717	9.8076
			High	**Ch21400** (2565)	35.718	8.9423	34.718	9.8269
		15	Low	**Ch20825** (2507.5)	35.719	13.3766	34.719	14.5480
			Mid	**Ch21100** (2535)	35.720	--	34.720	14.5208
			High	**Ch21375** (2562.5)	35.721	--	34.721	14.5480
		20	low	**Ch20850** (2510)	35.722	--	34.722	19.1442
			Mid	**Ch21100** (2535)	35.723	17.8397	34.723	19.2500
			High	**Ch21350** (2560)	35.724	--	34.724	19.0032

Remark: see extract of diagrams with max. values in annex 4

*1) measured only in the worst case settings of 26 dBc Emission Bandwidth

5.7. RF-Parameter - Frequency stability on temperature and voltage variations

5.7.1. Test location and equipments (for reference numbers please see chapter 'List of test equipment')

test location	☒ CETECOM Essen (Chapter. 2.2.1)		☐ Please see Chapter. 2.2.2		☐ Please see Chapter. 2.2.3	
test site	☐ 347 Radio.lab.1	☒ Radio.lab.2			☐	☐
spectr. analys.	☐ 584 FSU	☐ 489 ESU 40	☐ 264 FSEK	☐ 620 ESU 26	☐	☐
signaling	☐ 392 MT8820A	☐ 436 CMU	☐ 547 CMU	☒ 594 CMW500	☐	
DC power	☐ 611 E3632A	☐ 457 EA 3013A	☐ 459 EA 2032-50	☐ 268 EA- 3050	☒ 494 AG6632A	☐ 498 NGPE 40
otherwise	☒ 529 6dB divider	☒ 530 10dB Att.	☐ 431 Near field			
Climatic test chamber	☒ 331 HC 4055					
line voltage	☐ 230 V 50 Hz via public mains		☐ 060 110 V/ 60 Hz via PAS 5000			

5.7.2. Requirements and limits

FCC	§2.1055(a)(1) , §27.54
Limit	*"The frequency stability shall be sufficient to ensure that the fundamental emission stays within the authorized frequency block"*

5.7.3. Test condition and test set-up

Test system set-up	Please see chapter "Test system set-up for conducted measurements on antenna port" In order to maintain the voltage constant over the time period of the tests, a dummy battery was connected to a laboratory power supply if applicable for battery powered equipment. The power supply voltage was controlled on the input of the power supply terminals of the EUT during transmission mode.
Measurement method	The RF Channel spacing is 100 kHz according LTE-Spec, with a guard band depending of the TX signal bandwidth. Details can be found in standard 3GPP36.521. The aim of the EUT is to function under all extreme conditions within authorized sub-bands in regard to temperature and voltage variations. The frequency deviation was recorded with base station's build in capability. (CMW500) for both modulations possible: QPSK and 16-QAM As the standard requires that the fundamental emissions stays within the authorized band, a limit of ±0.1ppm is considered low enough to ensure this. However the standard required a more relaxed limit of ±2.5ppm
EUT settings	EUT is set TX mode, highest transmit power conditions (RMC-mode), power saving techniques have been disabled Tests have been done in RMC operating mode ,maximum power at lowest per bandwidth allowed TX signal bandwidth: 5MHz. Both modulations have been tested: QPSK and 16-QAM.

5.7.3.1. Frequency shift of carrier against a voltage range at constant nominal temperature of 20° Celsius

1.) determine the carrier frequency for middle channel at room temperature and nominal voltage [20°C]
2.) The voltage was reduced in absolute Volt steps to 85% of Vmin declared. (this shall be specified by the manufacturer) Record the carrier frequency shift within 2 minutes after powering on the EUT, to prevent for self heating effects.
3.) The voltage was increased in absolute Volt steps 115% of Vmax declared voltage. Record the carrier frequency shift within 2 minutes after powering on the EUT, to prevent for self heating effects.

5.7.3.2. Measurement Results LTE Band 7

Voltage [V]	Maximum frequency error				Verdict
	Channel 21100 (2535MHz) / BW = 5MHz / Full RB				
	QPSK Modulation [Hz]	16-QAM Modulation [Hz]	QPSK Modulation [ppm]	16-QAM Modulation [ppm]	Limit=±0.1ppm
3.825	-30.57	-30.57	-0.012	-0.012	passed
4.50	-30.36	-30.36	-0.012	-0.012	
14.00	-30.36	-30.36	-0.012	-0.012	
18.00	-33.62	-30.64	-0.013	-0.012	
20.70	-28.54	-31.01	-0.011	-0.012	

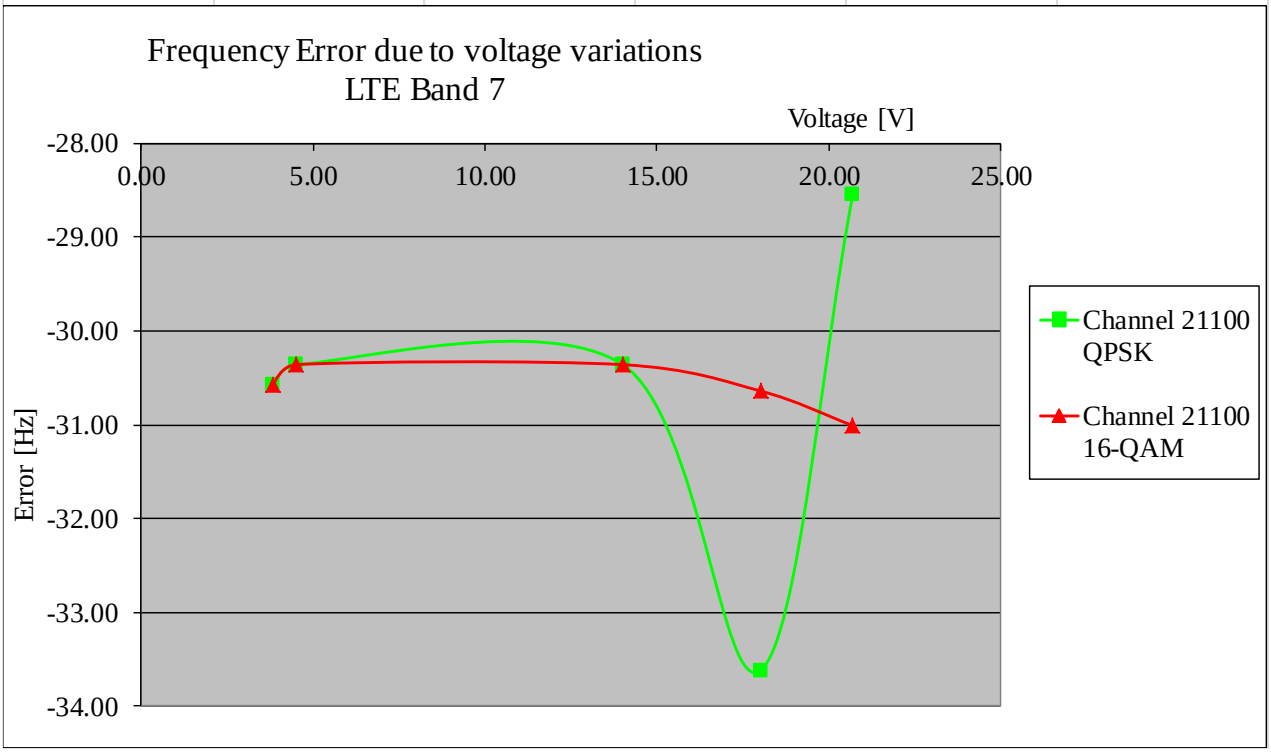

Remark: For voltage steps 85% of minimum, minimum, nominal, maximum and 115% of maximum were used.

5.7.3.3. Frequency shift of carrier against temperature at constant power supply voltage

1.) Determine the carrier frequency for middle channel at room temperature [20°C] and nominal voltage as stated by the applicant.
2.) Expose the mobile station to –30°C, wait sufficient time to have constant temperature.
3.) Perform the carrier frequencies measurements in 10°C increments from –30°C to +50°C. For about half hour at the specified temperature the mobile was powered-off. After powering-on, the measurements were made within 2 minute for the channel, in order to prevent self-warming of the mobile.

5.7.3.4. Measurements results LTE Band 7

Temperature [°C]	Maximum frequency error				Verdict
	Channel 21100 (2535MHz) / BW = 5MHz / Full RB				
	QPSK Modulation [Hz]	16-QAM Modulation [Hz]	QPSK Modulation [ppm]	16-QAM Modulation [ppm]	Limit=±0.1ppm
-30	-26.91	-26.26	-0.011	-0.010	Passed
-20	-27.38	-27.25	-0.011	-0.011	
-10	-30.68	33.66	-0.012	0.013	
0	-29.21	37.92	-0.012	0.015	
10	-30.98	-28.47	-0.012	-0.011	
20	-29.33	-30.03	-0.012	-0.012	
30	-28.07	-32.44	-0.011	-0.013	
40	-30.37	-30.71	-0.012	-0.012	
50	-34	-31.63	-0.013	-0.012	

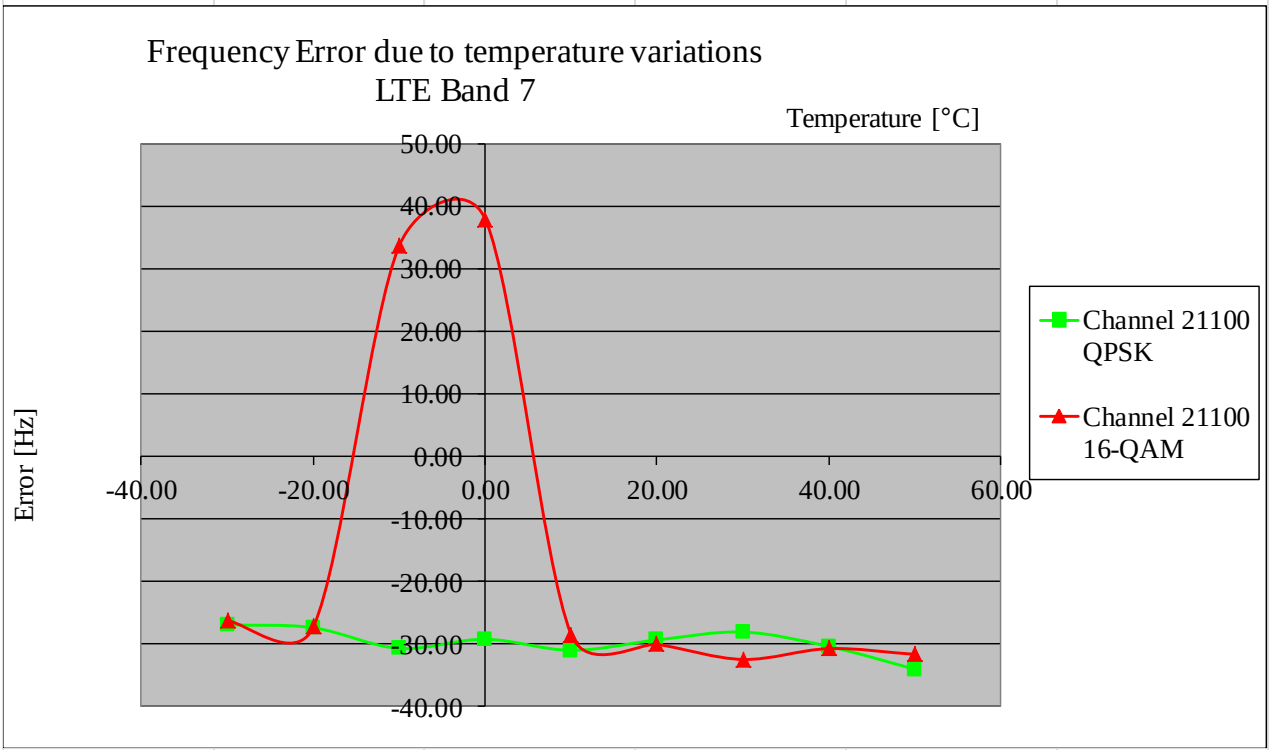

5.8. Measurement uncertainties

The reported uncertainties are calculated based on the standard uncertainty multiplied with the appropriate coverage factor **k**, such that a confidence level of approximately 95% is achieved.
For uncertainty determination, each component used in the concrete measurement set-up was taken in account and it's contribution to the overall uncertainty according it's statistical distribution calculated.

Following table shows expectable uncertainties for each measurement type performed.

RF-Measurement	Frequency range	Calculated uncertainty based on a confidence level of 95%	Remarks:
Power Output conducted	9 kHz .. 20 GHz	1.0 dB	--
Power Output radiated	30 MHz .. 4 GHz	3.17 dB	Substitution method
Conducted emissions on antenna ports	9 kHz .. 20 GHz	1.0 dB	--
Radiated emissions enclosure	150 kHz .. 30 MHz	5.0 dB	Magnetic field
	30 MHz .. 1 GHz	4.2 dB	E-Field
	1 GHz .. 20 GHz	3.17 dB	Substitution method
Occupied bandwidth	9 kHz .. 4 GHz	0.1272 ppm (Delta Marker)	Frequency error
		1.0 dB	Power
Emission bandwidth	9 kHz .. 4 GHz	0.1272 ppm (Delta Marker)	Frequency error
		1.0 dB	Power
Frequency stability	9 kHz .. 20 GHz	0.0636 ppm	--
Conducted emissions on AC-mains port (U_{CISPR})	9 kHz .. 150 kHz	4.0 dB	--
	150 kHz .. 30 MHz	3.6 dB	

Table: measurement uncertainties, valid for conducted/radiated measurements

6. Abbreviations used in this report

The abbreviations	
ANSI	American National Standards Institute
AV , AVG, CAV	Average detector
EIRP	Equivalent isotropically radiated power, determined within a separate measurement
EGPRS	Enhanced General Packet Radio Service
EUT	Equipment Under Test
FCC	Federal Communications Commission, USA
IC	Industry Canada
n.a.	not applicable
Op-Mode	Operating mode of the equipment
PK	Peak
RBW	resolution bandwidth
RF	Radio frequency
RSS	Radio Standards Specification, Dokuments from Industry Canada
Rx	Receiver
TCH	Traffic channel
Tx	Transmitter
QP	Quasi peak detector
VBW	Video bandwidth
ERP	Effective radiated power

7. Accreditation details of CETECOM's laboratories and test sites

Ref.-No.	Accreditation Certificate	Valid for laboratory area or test site	Accreditation Body
-	D-PL-12047-01-01	All laboratories and test sites of CETECOM GmbH, Essen	DAkkS, Deutsche Akkreditierungsstelle GmbH
337 487 558 348 348	736496	Radiated Measurements 30 MHz to 1 GHz, 3 m / 10 m (OATS) Radiated Measurements 30 MHz to 1 GHz, 3 m (SAR) Radiated Measurements above 1 GHz, 3 m (FAR) Mains Ports Conducted Interference Measurements Telecommunication Ports Conducted Interference Measurem.	FCC, Federal Communications Commission Laboratory Division, USA (MRA US-EU 0003)
337 487 550 558	3462D-1 3462D-2 3462D-2 3462D-3	Radiated Measurements 30 MHz to 1 GHz, 3 m / 10 m (OATS) Radiated Measurements 30 MHz to 1 GHz, 3 m (SAR) Radiated Measurements 1 GHz to 6 GHz, 3 m (SAR) Radiated Measurements above 1 GHz, 3 m (FAR)	IC, Industry Canada Certification and Engineering Bureau
487 550 348 348	R-2666 G-301 C-2914 T-1967	Radiated Measurements 30 MHz to 1 GHz, 3 m (SAR) Radiated Measurements 1 GHz to 6 GHz, 3 m (SAR) Mains Ports Conducted Interference Measurements Telecommunication Ports Conducted Interference Measurem.	VCCI, Voluntary Control Council for Interference by Information Technology Equipment, Japan
OATS = Open Area Test Site, SAR = Semi Anechoic Room, FAR = Fully Anechoic Room			

8. Instruments and Ancillary

8.1. Used equipment "CTC"

The "Ref.-No" in the left column of the following tables allows the clear identification of the laboratory equipment.

8.1.1. Test software and firmware of equipment

Ref.-No.	Equipment	Type	Serial-No.	Version of Firmware or Software during the test
001	EMI Test Receiver	ESS	825132/017	Firm.= 1.21 , OTP=2.0, GRA=2.0
012	Signal Generator (EMS-cond.)	SMY 01	839069/027	Firm.= V 2.02
013	Power Meter (EMS cond.)	NRVD	839111/003	Firm.= V 1.51
017	Digital Radiocommunication Tester	CMD 60 M	844365/014	Firmware = V 3.52 .22.01.99, DECT = D2.87 13.01.99
053	Audio Analyzer	UPA3	860612/022	Firm. V 4.3
119	RT Harmonics Analyzer dig. Flickermeter	B10	G60547	Firm.= V 3.1DHG
140	Signal Generator	SMHU	831314/006	Firm.= 3.21
261	Thermal Power Sensor	NRV-Z55	825083/0008	EPROM-Datum 02.12.04, SE EE 1 B
262	Power Meter	NRV-S	825770/0010	Firm.= 2.6
263	Signal Generator	SMP 04	826190/0007	Firm.=3.21
264	Spectrum Analyzer	FSEK 30	826939/005	Bios=2.1, Analyzer= 3.20
295	Racal Digital Radio Test Set	6103	1572	UNIT Firmware= 4.04, SW-Main=4.04, SW-BBP=1.04, SW-DSP=1.02, Hardboot=1.02, Softboot=2.02
298	Univ. Radio Communication Tester	CMU 200	832221/091	R&S Test Firmware =3.53 /3.54 (current Testsoftw. f. all band used
323	Digital Radiocommunication Tester	CMD 55	825878/0034	Firm.= 3.52 .22.01.99
331	Climatic Test Chamber -40/+80 Grad	HC 4055	43146	TSI 1.53
335	CTC-EMS-Conducted	System EMS Conducted	-	EMC 32 V 8.52
340	Digital Radiocommunication Tester	CMD 55	849709/037	Firm.= 3.52 .22.01.99
355	Power Meter	URV 5	891310/027	Firm.= 1.31
365	10V Insertion Unit 50 Ohm	URV5-Z2	100880	Eprom Data = 31.03.08
366	Ultra Compact Simulator	UCS 500 M4	V0531100594	Firm. UCS 500=001925/3.06a02, rc=ISMIEC 4.10
371	Bluetooth Tester	CBT32	100153	CBT V5,30+ SW-Option K55, K57
377	EMI Test Receiver	ESCS 30	100160	Firm.= 2.30, OTP= 02.01, GRA= 02.36
378	Broadband RF Field Monitor	RadiSense III	03D00013SNO-08	Firm.= V.03D13
383	Signal Generator	SME 03	842 828 /034	Firm.= 4.61
389	Digital Multimeter	Keithley 2000	0583926	Firm. = A13 (Mainboard) A02 (Display)
392	Radio Communication Tester	MT8820A	6K00000788	Firm.= 4.50 #005, IPL=4.01#001,OS=4.02#001, GSM=4.41#013, W-CDMA= 4.54#004, scenario= 4.52#002
436	Univ. Radio Communication Tester	CMU 200	103083	R&S Test Firmware Base=5.14, Mess-Software= GSM:5.14 WCDMA:5.14 (current Testsoftw. F. all band
441	CTC-SAR-EMI Cable Loss	System EMI field (SAR)	-	EMC 32 Version 8.52
442	CTC-SAR-EMS	System EMS field (SAR)	-	EMC 32 Version 8.40
443	CTC-FAR-EMI-RSE	System CTC-FAR-EMI-RSE	-	Spuri 7.2.5 or EMC 32 Ver. 8.53
444	CTC-FAR-EMS field	System-EMS-Field (FAR)	-	EMC 32 Version 8.40
460	Univ. Radio Communication Tester	CMU 200	108901	R&S Test Firmware Base=5.14, GSM=5.14 WCDMA=5.14 (current Testsoftw.,f. all band to be used,
489	EMI Test Receiver	ESU40	1000-30	Firmware=4.43 SP3, Bios=V5.1-16-3, Spec. =01.00
491	ESD Simulator dito	ESD dito	dito307022	V 2.30
524	Voltage Drop Simulator	VDS 200	0196-16	Software Nr: 000037 Version V4.20a01
526	Burst Generator	EFT 200 A	0496-06	Software Nr. 000034 Version V2.32
527	Micro Pulse Generator	MPG 200 B	0496-05	Software-Nr. 000030 Version V2.43
528	Load Dump Simulator	LD 200B	0496-06	Software-Nr. 000031 Version V2.35a01
546	Univ. Radio Communication Tester	CMU 200	106436	R&S Test Firmware Base=5.14, GSM=5.14 WCDMA=5.14 (current Testsoftw.,f. all band to be used
547	Univ. Radio Communication Tester	CMU 200	835390/014	R&S Test Firmware Base=V5.1403 (current Testsoftw., f. all band used, GSM = 5.14 WCDMA: = 5.14
584	Spectrum Analyzer	FSU 8	100248	2.82_SP3
597	Univ. Radio Communication Tester	CMU 200	100347	R&S Test Firmware Base=5.01, GSM=5.02 WCDMA= not installed, Mainboard= µP1=V.850
598	Spectrum Analyzer	FSEM 30 (Reserve)	831259/013	Firmware Bios 3.40 , Analyzer 3.40 Sp 2
620	EMI Test Receiver	ESU 26	100362	4.43_SP3
642	Wideband Radio Communication Tester	CMW 500	126089	Setup V03.26, Test programm component V03.02.20
692	Bluetooth Tester	CBT 32	100236	CBT V 5.40, FW: V.2.41 (FPGA Digital, V. 3.09 FPGA RF)

8.1.2. Single instruments and test systems

Ref.-No.	Equipment	Type	Serial-No.	Manufacturer	Interval of calibration	Remark	Cal due
001	EMI Test Receiver	ESS	825132/017	Rohde & Schwarz	12 M	-	31.03.2015
005	AC - LISN (50 Ohm/50µH, test site 1)	ESH2-Z5	861741/005	Rohde & Schwarz	12 M	-	31.03.2015
007	Single-Line V-Network (50 Ohm/5µH)	ESH3-Z6	892563/002	Rohde & Schwarz	12 M	-	31.03.2015
009	Power Meter (EMS-radiated)	NRV	863056/017	Rohde & Schwarz	24 M	-	31.03.2015
016	Line Impedance Simulating Network	Op. 24-D	B6366	Spitzenberger+Spies	36 M	-	31.03.2016
020	Horn Antenna 18 GHz (Subst 1)	3115	9107-3699	EMCO	36/12 M	-	31.03.2017
021	Loop Antenna (H-Field)	6502	9206-2770	EMCO	36 M	-	31.03.2015
030	Loop Antenna (H-field)	HFH-Z2	879604/026	Rohde & Schwarz	36 M	-	31.03.2015
033	RF-current probe (100kHz-30MHz)	ESH2-Z1	879581/18	Rohde & Schwarz	24 M	-	31.03.2015
057	relay-switch-unit (EMS system)	RSU	494440/002	Rohde & Schwarz	pre-m	1a	
060	power amplifier (DC-2kHz)	PAS 5000	B6363	Spitzenberger+Spies	-	3	
066	notch filter (WCDMA; FDD1)	WRCT 1900/2200-5/40-10EEK	5	Wainwright GmbH	12 M	1g	30.06.2015
086	DC - power supply, 0 -10 A	LNG 50-10	-	Heinzinger Electronic	pre-m	2	
087	DC - power supply, 0 -5 A	EA-3013 S	-	Elektro Automatik	pre-m	2	
090	Helmholtz coil: 2x10 coils in series	Helmholtz coil: 2x10 coils in	-	RWTÜV	12 M	4	31.03.2015
091	USB-LWL-Converter	OLS-1	007/2006	Ing. Büro Scheiba	-	4	
099	passive voltage probe	ESH2-Z3	299.7810.52	Rohde & Schwarz	36 M	-	31.03.2015
100	passive voltage probe	Probe TK 9416	without	Schwarzbeck	36 M	-	31.03.2015
110	USB-LWL-Converter	OLS-1	-	Ing. Büro Scheiba	-	4	
119	RT Harmonics Analyzer dig. Flickermeter	B10	G60547	BOCONSULT	36 M	-	31.03.2016
136	adjustable dipole antenna (Dipole 1)	3121C-DB4	9105-0697	EMCO	36 M	-	31.03.2015
140	Signal Generator	SMHU	831314/006	Rohde & Schwarz	24 M	-	31.03.2016
248	attenuator	SMA 6dB 2W	-	Radiall	pre-m	2	
249	attenuator	SMA 10dB 10W	-	Radiall	pre-m	2	
252	attenuator	N 6dB 12W	-	Radiall	pre-m	2	
256	attenuator	SMA 3dB 2W	-	Radiall	pre-m	2	
257	hybrid	4031C	04491	Narda	pre-m	2	
260	hybrid coupler	4032C	11342	Narda	pre-m	2	
261	Thermal Power Sensor	NRV-Z55	825083/0008	Rohde & Schwarz	24 M	-	31.03.2016
262	Power Meter	NRV-S	825770/0010	Rohde & Schwarz	24 M	-	31.03.2016
263	Signal Generator	SMP 04	826190/0007	Rohde & Schwarz	36 M	-	31.03.2016
264	Spectrum Analyzer	FSEK 30	826939/005	Rohde & Schwarz	12 M	-	31.03.2015
265	peak power sensor	NRV-Z33, Model 04	840414/009	Rohde & Schwarz	24 M	-	31.03.2016
266	Peak Power Sensor	NRV-Z31, Model 04	843383/016	Rohde & Schwarz	24 M	-	31.03.2016
267	notch filter GSM 850	WRCA 800/960-6EEK	9	Wainwright GmbH	pre-m	2	
270	termination	1418 N	BB6935	Weinschel	pre-m	2	
271	termination	1418 N	BE6384	Weinschel	pre-m	2	
272	attenuator (20 dB) 50 W	Model 47	BF6239	Weinschel	pre-m	2	
273	attenuator (10 dB) 100 W	Model 48	BF9229	Weinschel	pre-m	2	
274	attenuator (10 dB) 50 W	Model 47 (10 dB) 50 W	BG0321	Weinschel	pre-m	2	
275	DC-Block	Model 7003 (N)	C5129	Weinschel	pre-m	2	
276	DC-Block	Model 7006 (SMA)	C7061	Weinschel	pre-m	2	
279	power divider	1515 (SMA)	LH855	Weinschel	pre-m	2	
287	pre-amplifier 25MHz - 4GHz	AMF-2D-100M4G-35-10P	379418	Miteq	12 M	1c	30.06.2015
291	high pass filter GSM 850/900	WHJ 2200-4EE	14	Wainwright GmbH	12 M	1c	30.06.2015
298	Univ. Radio Communication Tester	CMU 200	832221/091	Rohde & Schwarz	pre-m	3	
300	AC LISN (50 Ohm/50µH, 1-phase)	ESH3-Z5	892 239/020	Rohde & Schwarz	12 M	-	31.03.2015
301	attenuator (20 dB) 50W, 18GHz	47-20-33	AW0272	Lucas Weinschel	pre-m	2	
302	horn antenna 40 GHz (Meas 1)	BBHA9170	155	Schwarzbeck	36 M	-	31.03.2017
303	horn antenna 40 GHz (Subst 1)	BBHA9170	156	Schwarzbeck	36 M	-	31.03.2017
331	Climatic Test Chamber -40/+80 Grad	HC 4055	43146	Heraeus Vötsch	24 M	-	30.11.2014
341	Digital Multimeter	Fluke 112	81650455	Fluke	24 M	-	31.03.2016
342	Digital Multimeter	Voltcraft M-4660A	IB 255466	Voltcraft	24 M	-	31.03.2015
347	laboratory site	radio lab.	-	-	-	5	
348	laboratory site	EMI conducted	-	-	-	5	
354	DC - Power Supply 40A	NGPE 40/40	448	Rohde & Schwarz	pre-m	2	
355	Power Meter	URV 5	891310/027	Rohde & Schwarz	24 M	-	31.03.2016
356	power sensor	NRV-Z1	882322/014	Rohde & Schwarz	24 M	-	31.03.2015
357	power sensor	NRV-Z1	861761/002	Rohde & Schwarz	24 M	-	31.03.2015
371	Bluetooth Tester	CBT32	100153	R&S	24 M	-	31.03.2016
373	Single-Line V-Network (50 Ohm/5µH)	ESH3-Z6	100535	Rohde & Schwarz	24 M	-	31.03.2016
376	Horn Antenna 6 GHz	BBHA9120 E	BBHA 9120 E 179	Schwarzbeck	12 M	-	31.03.2015
377	EMI Test Receiver	ESCS 30	100160	Rohde & Schwarz	12 M	-	31.03.2015
389	Digital Multimeter	Keithley 2000	0583926	Keithley	24 M	-	31.03.2015
392	Radio Communication Tester	MT8820A	6K00000788	Anritsu	12 M	-	31.03.2015
431	Model 7405	Near-Field Probe Set	9305-2457	EMCO	-	4	
436	Univ. Radio Communication Tester	CMU 200	103083	Rohde & Schwarz	12 M	-	31.03.2015
439	UltraLog-Antenna	HL 562	100248	Rohde & Schwarz	36 M	-	31.03.2017
441	CTC-SAR-EMI Cable Loss	System EMI field (SAR) Cable	-	CETECOM	12 M	5	31.10.2015

Ref.-No.	Equipment	Type	Serial-No.	Manufacturer	Interval of calibration	Remark	Cal due
443	CTC-FAR-EMI-RSE	System CTC-FAR-EMI-RSE	-	ETS-Lindgren / CETECOM	12 M	5	15.07.2015
448	notch filter WCDMA_FDD II	WRCT 1850.0/2170.0-5/40-	5	Wainwright Instruments GmbH	12 M	1c	30.06.2015
449	notch filter WCDMA FDD V	WRCT 824.0/894.0-5/40-8SSK	1	Wainwright	12 M	1c	30.06.2015
454	Oscilloscope	HM 205-3	9210 P 29661	Hameg	-	4	
456	DC-Power supply 0-5 A	EA 3013 S	207810	Elektro Automatik	pre-m	2	
459	DC -Power supply 0-5 A , 0-32 V	EA-PS 2032-50	910722	Elektro Automatik	pre-m	2	
460	Univ. Radio Communication Tester	CMU 200	108901	Rohde & Schwarz	12 M	-	31.03.2015
463	Universal source	HP3245A	2831A03472	Agilent	-	4	
466	Digital Multimeter	Fluke 112	89210157	Fluke USA	24 M	-	31.03.2016
467	Digital Multimeter	Fluke 112	89680306	Fluke USA	36 M	-	31.03.2015
468	Digital Multimeter	Fluke 112	90090455	Fluke USA	36 M	-	31.03.2015
477	ReRadiating GPS-System	AS-47	-	Automotive Cons. Fink	-	3	
480	power meter (Fula)	NRVS	838392/031	Rohde & Schwarz	24 M	-	31.03.2015
482	filter matrix	Filter matrix SAR 1	-	CETECOM (Brl)	-	1d	
484	pre-amplifier 2,5 - 18 GHz	AMF-5D-02501800-25-10P	1244554	Miteq	12 M	-	30.06.2015
487	System CTC NSA-Verification SAR-EMI	System EMI field (SAR) NSA	-	ETS Lindgren / CETECOM	24 M	-	30.06.2015
489	EMI Test Receiver	ESU40	1000-30	Rohde & Schwarz	12 M	-	31.03.2015
502	band reject filter	WRCG 1709/1786-1699/1796-	SN 9	Wainwright	pre-m	2	
503	band reject filter	WRCG 824/849-814/859-	SN 5	Wainwright	pre-m	2	
512	notch filter GSM 850	WRCA 800/960-02/40-6EEK	SN 24	Wainwrght	12 M	1c	30.06.2015
517	relais switch matrix	HF Relais Box Keithley	SE 04	Keithley	pre-m	2	
523	Digital Multimeter	L4411A	MY46000154	Agilent	24 M	-	31.03.2015
529	6 dB Broadband resistive power divider	Model 1515	LH 855	Weinschel	pre-m	2	
530	10 dB Broadband resistive power divider	R 416110000	LOT 9828	-	pre-m	2	
546	Univ. Radio Communication Tester	CMU 200	106436	R&S	12 M	-	12.02.2015
547	Univ. Radio Communication Tester	CMU 200	835390/014	Rohde & Schwarz	12 M	-	31.03.2015
548	Digital-Barometer	GBP 2300	without	Greisinger GmbH	36 M	-	30.06.2015
549	Log.Per-Antenna	HL025	1000060	Rohde & Schwarz	36/12 M	-	31.03.2015
552	high pass filter 2,8-18GHz	WHKX 2.8/18G-10SS	4	Wainwright	12 M	1c	30.06.2015
558	System CTC FAR S-VSWR	System CTC FAR S-VSWR	-	CTC	24 M	-	31.07.2015
574	Biconilog Hybrid Antenna	BTA-L	980026L	Frankonia	36/12 M	-	31.03.2016
584	Spectrum Analyzer	FSU 8	100248	Rohde & Schwarz	pre-m	-	
594	Wideband Radio Communication Tester	CMW 500	101757	Rohde & Schwarz	12 M	-	31.03.2015
597	Univ. Radio Communication Tester	CMU 200	100347	Rohde & Schwarz	36 M	-	31.03.2016
598	Spectrum Analyzer	FSEM 30 (Reserve)	831259/013	Rohde & Schwarz	24 M	-	13.01.2015
600	power meter	NRVD (Reserve)	834501/018	Rohde & Schwarz	24 M	-	31.03.2015
601	medium-sensitivity diode sensor	NRV-Z5 (Reserve)	8435323/003	Rohde & Schwarz	24 M	-	31.03.2015
602	peak power sensor	NRV-Z32 (Reserve)	835080	Rohde & Schwarz	24 M	-	31.03.2015
611	DC power supply	E3632A	KR 75305854	Agilent	pre-m	2	
612	DC power supply	E3632A	MY 40001321	Agilent	pre-m	2	
613	Attenuator	R416120000 20dB 10W	Lot. 9828	Radiall	pre-m	2	
616	Digitalmultimeter	Fluke 177	88900339	Fluke	24 M	-	31.03.2016
617	Power Splitter/Combiner	ZFSC-2-2-S+	S F987001108	Mini Circuits	-	2	
618	Power Splitter/Combiner	50PD-634	600994	JFW Industries USA	-	2	
619	Power Splitter/Combiner	50PD-634	600995	JFW Industries, USA	-	3	
620	EMI Test Receiver	ESU 26	100362	Rohde-Schwarz	12 M	-	31.03.2015
621	Step Attenuator 0-139 dB	RSP	100017	Rohde & Schwarz	pre-m	2	
625	Generic Test Load USB	Generic Test Load USB	-	CETECOM	-	2	
634	Spectrum Analyzer	FSM (HF-Unit)	826188/010	Rohde & Schwarz	pre-m	2	
637	High Speed HDMI with Ethernet 1m	HDMI cable with Ethernet 1m	-	KogiLink	-	2	
638	HDMI Kabel with Ethernet 1,5 m flach	HDMI cable with Ethernet	-	Reichelt	-	2	
640	HDMI cable 2m rund	HDMI cable 2m rund	-	Reichelt	-	2	
641	HDMI cable with Ethernet	Certified HDMI cable with	-	PureLink	-	2	
642	Wideband Radio Communication Tester	CMW 500	126089	Rohde&Schwarz	12 M	-	31.03.2015
644	Amplifierer	ZX60-2534M+	SN865701299	Mini-Circuits	-	-	
670	Univ. Radio Communication Tester	CMU 200	106833	Rohde & Schwarz	12 M	-	31.03.2015
671	DC-power supply 0-5 A	EA-3013S	-	Elektro Automatik	pre-m	2	
678	Power Meter	NRP	101638	Rohde&Schwarz	pre-m	-	
683	Spectrum Analyzer	FSU 26	200571	Rohde & Schwarz	12 M	-	26.11.2014
686	Field Analyzer	EHP-200A	160WX30702	Narda Safety Test Solutions	24 M	-	18.07.2015
687	Signal Generator	SMF 100A	102073	Rohde&Schwarz	12 M	-	27.11.2014
688	Pre Amp	JS-18004000-40-8P	1750117	Miteq	pre-m	-	
692	Bluetooth Tester	CBT 32	100236	Rohde & Schwarz	12 M	-	31.03.2015
693	TS8997	CTC-Radio Lab 1_TS8997	-	Rohde&Schwarz	12 M	5	30.11.2014

8.1.3. Legend

Note / remarks		Calibrated during system calibration:
	1a	System CTC-SAR-EMS (Ref.-No. 442)
	1b	System-CTC-EMS-Conducted (Ref.-No. 335)
	1c	System CTC-FAR-EMI-RSE (Ref.-No . 443)
	1d	System CTC-SAR-EMI (Ref.-No . 441)
	1e	System CTC-OATS (EMI radiated) (Ref.-No. 337)
	1 f	System CTC-CTIA-OTA (Ref.-No . 420)
	1 g	System CTC-FAR-EMS (Ref.-No . 444)
	2	Calibration or equipment check immediately before measurement
	3	Regulatory maintained equipment for functional check or support purpose
	4	Ancillary equipment without calibration e.g. mechanical equipment or monitoring equipment
	5	Test System

Interval of calibration	12 M	12 month
	24 M	24 month
	36 M	36 month
	24/12 M	Calibration every 24 months, between this every 12 months internal validation
	36/12 M	Calibration every 36 months, between this every 12 months internal validation
	Pre-m	Check before starting the measurement
	-	Without calibration

9. Versions of test reports (change history)

Name of report	Date	Remarks:
TR6-0491-14-1-23d	2014-09-11	First version
--	--	--
--	--	--