# TEST REPORT
No.: 6-0491-14-1-23b

According to:
**FCC Regulations**
Part 22

**IC-Regulations**
RSS-132, Issue 3
RSS-Gen, Issue 3

for

## peiker acustic GmbH & Co. KG

## GSM/W-CDMA/LTE Device
## ATM-01 T1-RoW-4G
(W-CDMA Technology FDD Band 5)

FCC-ID: QWY-ATM-T-132
IC: 6588A-ATMT132

| Laboratory Accreditation and Listings | | | |
|---|---|---|---|
| DAkkS Deutsche Akkreditierungsstelle D-PL-12047-01-01 | Reg. No.: 736496<br>MRA US-EU 0003 | Industry Canada<br>Reg. No.: 3462D-1<br>Reg. No.: 3462D-2<br>Reg. No.: 3462D-3 | Voluntary Controls for Electromagnetic Emissions<br>Reg. No.:<br>R-2666 C-2914,<br>T-1967, G-301 |
| WiFi ALLIANCE AUTHORIZED RF LABORATORY | CTIA Authorized Test Lab<br>LAB CODE 20011130-00 | | |
| accredited according to DIN EN ISO/IEC 17025 | | | |

**CETECOM GmbH**
Laboratory Radio Communications & Electromagnetic Compatibility
Im Teelbruch 116 • 45219 Essen • Germany
Registered in Essen, Germany, Reg. No.: HRB Essen 8984
Tel.: + 49 (0) 20 54 / 95 19-954 • Fax: + 49 (0) 20 54 / 95 19-964
E-mail: info@cetecom.com • Internet: www.cetecom.com


The test results relate only to the individual items which have been tested. This report shall not be reproduced in parts without the written approval of the testing laboratory © Copyright: All rights reserved by CETECOM

# Table of contents

**1. SUMMARY OF TEST RESULTS....3**

1.1. TX mode, Test overview of FCC and Canada IC (RSS) Standards....3
1.2. Attestation:....4

**2. ADMINISTRATIVE DATA....5**

2.1. Identification of the testing laboratory....5
2.2. Test location....5
2.3. Organizational items....5
2.4. Applicant's details....5
2.5. Manufacturer's details....5

**3. EQUIPMENT UNDER TEST (EUT)....6**

3.1. SUMMARY OF RESULTS AND TECHNICAL DATA OF MAIN EUT DECLARED BY APPLICANT .6
3.2. EUT: Type, S/N etc. and short descriptions used in this test report....7
3.3. Auxiliary Equipment (AE): Type, S/N etc. and short descriptions....7
3.4. EUT set-ups....7
3.5. EUT operating modes....8
3.6. Configuration of cables used for testing....8

**4. DESCRIPTION OF TEST SYSTEM SET-UP'S....9**

4.1. Test system set-up for conducted measurements on antenna port....9
4.2. Test system set-up for radiated magnetic field measurements below 30 MHz....10
4.3. Test system set-up for radiated spurious emission measurements....11

**5. MEASUREMENTS....12**

5.1. General Limit - Radiated field strength emissions below 30 MHz....12
5.2. **RF-Parameter - Radiated out of Band RF emissions and Band Edge**....14
5.3. RF-Parameter - RF Peak power output radiated....16
5.4. RF-Parameter - RF Peak power output conducted....18
5.5. **RF-Parameter - Conducted out of Band RF emissions and Band Edge**....20
5.6. RF-Parameter - Occupied bandwidth and emission bandwidth....22
5.7. **RF-Parameter - Frequency stability on temperature and voltage variations**....23
5.8. Measurement uncertainties....26

**6. ABBREVIATIONS USED IN THIS REPORT....26**

**7. ACCREDITATION DETAILS OF CETECOM'S LABORATORIES AND TEST SITES....27**

**8. INSTRUMENTS AND ANCILLARY....28**

8.1. Used equipment "CTC"....28

**9. VERSIONS OF TEST REPORTS (CHANGE HISTORY)....31**

# Table of annex

| | Total pages |
|---|---|
| Annex 1: External photographs of EUT - separate document TR6-0491-14-1-23-A1 | 7 |
| Annex 2: Internal photographs - separate document TR6-0491-14-1-23-A2 | 4 |
| Annex 3: Test set-up photographs - separate document TR6-0491-14-1-23-A3 | 4 |
| Annex 4: Measurement diagrams - separate document TR6-0491-14-1-23b-A4 | 24 |

The listed attachments are an integral part of this report.

# 1. Summary of test results

The test results apply exclusively to the test samples as presented in this Report. The CETECOM GmbH does not assume responsibility for any conclusions and generalizations taken in conjunction with other specimens or samples of the type of the item presented to tests.

The Equipment Under Test (in this report, hereinafter referred as EUT) supports radio frequency technologies. **This test report shows results for W-CDMA Band 5 only.** Other implemented wireless technologies were not considered within this test report.

Following tests have been performed to show compliance with applicable FCC Part 2, Part 22 of the FCC CFR 47 Rules, Edition 4th November 2013 and Canada RSS-132 Issue 3and RSS-Gen Issue 3 standards.

## 1.1. TX mode, Test overview of FCC and Canada IC (RSS) Standards

| No. of Diagram group | Test case | Port | References & Limits | | | EUT set-up | EUT op-mode | Result |
|---|---|---|---|---|---|---|---|---|
| | | | FCC Standard | RSS Section | Test limit | | | |
| 1 | AC-Power Lines Emissions Conducted<br><br>(0,15 - 30 MHz) | AC-Power lines<br><br>(conducted) | §15.207 | RSS-Gen, Issue 3: Chapter 7.2.4 | §15.207 limits<br><br>IC: Table 4, Chapter 7.2.4 | -- | -- | Remark 1.) |
| 2 | General field strength emissions (9 kHz - 30 MHz) | Cabinet + inter-connecting cables<br><br>(radiated) | §15.209(a) | RSS-Gen, Issue 3: Chapter 4.11 Chapter 7.2.5, Table 5+6 | 2400/F(kHz) µV/m<br>24000/F(kHz) µV/m<br>30 µV/m | 1 | 1 | Passed |
| 7 | RF-Power (ERP/EIRP) | | §2.1046<br>§22.913(a)(2) | RSS-132: 5.4<br>SRSP-503: 5.1.3 | < 11.5 Watt (EIRP)<br><br>< 2 Watt (EIRP) | 1 | 1 | passed |
| 8 | Spurious emissions | | §2.1053(a)<br>§2.1057<br>§22.917(a)(b) | RSS-132: 5.5(i)(ii) | Required attenuation below P(dBW): 43+10log(P) dBc | 1 | 1 | passed |
| 9 | Band-Edge compliance | | | | | 1 | 1 | passed |

| No. of Diagram group | Test case | Port | FCC Standard | | | EUT set-up | EUT op-mode | Result |
|---|---|---|---|---|---|---|---|---|
| | | | FCC Standard | RSS Section | Test limit | | | |
| 30 | RF Power | Antenna terminal (conducted) | §2.1046 | RSS-132: 5.4<br>SRSP-503: 5.1.3 | < 11.5 Watt (EIRP | 2 | 1 | passed |
| 34 | 26dB Emission bandwidth | | §2.202<br>§2.1049<br>§22.917(a) | RSS-Gen:4.6.1 | 99% Power | 2 | 1 | passed |
| 35 | 99% Occupied bandwidth | | | | | 2 | 1 | |
| 36 | Spurious emissions | | §2.1051<br>§2.1057<br>§22.917(a)(b) | RSS-132:<br>5.5(i)(ii) | Required attenuation below P(dBW):<br>43+10log(P) dBc | 2 | 1 | passed |
| 37 | Band-Edge compliance | | | | | 2 | 1 | |
| 38 | Frequency stability | | §22.355,<br>table C-1 | RSS-132: 5.3 | < ±2.5ppm | 2 | 1 | passed |

Remarks: 1.) car build in device, not applicable

## 1.2. Attestation:

I declare that all measurements were performed by me or under my supervision and that all measurements have been performed and are correct to my best knowledge and belief to Industry Canada standards. All requirements as shown in above table are met in accordance with enumerated standards.

D. Franke
Responsible for test section

CETECOM™ GmbH
Im Teelbruch 116
45219 Essen
Tel.: + 49 (0) 20 54 / 95 19 - 0
Fax: + 49 (0) 20 54 / 95 19 - 997

Dipl.-Ing. C. Lorenz
Responsible for test report

# 2. Administrative Data

## 2.1. Identification of the testing laboratory

| | |
|---|---|
| Company name: | CETECOM GmbH |
| Address: | Im Teelbruch 116<br>45219 Essen - Kettwig<br>Germany |
| Responsible for testing laboratory: | Dipl.-Ing. Niels Jeß |
| Deputy: | Dipl.-Ing. Rachid Acharkaoui |

## 2.2. Test location

### 2.2.1. Test laboratory "CTC"

| | |
|---|---|
| Company name: | see chapter 2.1. Identification of the testing laboratory |

## 2.3. Organizational items

| | |
|---|---|
| Responsible for test report: | Martin Nunier |
| Responsible project leader: | Dipl.-Ing. C. Lorenz |
| Receipt of EUT: | 2014-06-30 |
| Date(s) of test: | 2014-07-09 - 2014-08-22 |
| Date of report: | 2014-09-15 |
| Version of template: 13.02 Lorenz | |

## 2.4. Applicant's details

| | |
|---|---|
| Applicant's name: | peiker acustic GmbH & Co. KG |
| Address: | Max-Planck-Straße 28-32<br>61381 Friedrichsdorf/Ts.<br><br>GERMANY |
| Contact person: | Mr. Philippe Seguret |

## 2.5. Manufacturer's details

| | |
|---|---|
| Manufacturer's name: | please see Applicant's details |
| Address: | please see Applicant's details |

# 3. Equipment under test (EUT)

## 3.1. SUMMARY OF RESULTS AND TECHNICAL DATA OF MAIN EUT DECLARED BY APPLICANT

| | | | |
|---|---|---|---|
| Main function | GSM/W-CDMA/LTE Device | | |
| Type | ATM-01 T1-RoW-4G | | |
| TX-frequency range | FDD Band 5: 826.4-846.6 MHz (Uplink), 869-894 MHz (Downlink) | | |
| Type of modulation | FDD-Mode Release99: QPSK<br>FDD Mode Release 5+6: 16QAM additional | | |
| Number of channels | FDD Band 5: UARFCN range 4132 – 4183 – 4233 | | |
| UMTS-HSPA connectivity | ☒ Uplink speed: 5.76 Mb/s (category 6)<br>☐ Uplink speed: | | |
| Test Channel frequencies | Channel 4132: 826.4 MHz<br>Channel 4183: 836.6 MHz<br>Channel 4233: 846.6 MHz | | |
| Emission designator(s) | 4M17F9W | | |
| Antenna Type | ☐ Integrated<br>☐ External, no RF- connector<br>☒ External, separate RF-connector TX-Main + Secondary | | |
| Antenna Gain Tx (main) | ☒ Value: +1dBi (Data sheet_KSV_9308114)<br>☐ No information from customer | | |
| Antenna Gain Dx (diversity) | ☒ Value: -2dBi (Data sheet_Tel1_9273669)<br>☐ No information from customer | | |
| MAX PEAK Output Power: Radiated FDD-Mode 5 | 27.9 dBm (PK) | | |
| MAX PEAK Output Power: Conducted FDD-Mode 5 | 26.62 dBm (PK) | | |
| FCC-ID | QWY-ATM-T-132 | | |
| IC | 6588A°-ATMT132 | | |
| Power supply | ☒ DC power only: 14V DC Nominal $V_{MIN}$=4.5V, $V_{MAX}$=18V | | |
| Special EMI components | -- | | |
| Does EUT contain devices susceptible to magnetic fields, e.g. Hall elements, electrodynamics microphones, etc.? | ☐ yes<br>☒ no | | |
| EUT sample type | ☐ Production | ☒ Pre-Production | ☐ Engineering |
| FCC label attached | ☐ yes | ☒ no | |

## 3.2. EUT: Type, S/N etc. and short descriptions used in this test report

| Short descrip-tion*) | EUT | Type | S/N serial number (IMEI) | HW hardware status | SW software status |
|---|---|---|---|---|---|
| EUT A | GSM/W-CDMA/LTE Device | ATM-01 T1-RoW-4G | 0000500312 (IMEI: 35190606-000078-6) | 202.005.005 | 001.014.004 |
| EUT B | GSM/W-CDMA/LTE Device | ATM-01 T1-RoW-4G | 0000500309 (IMEI: 35190606-000068-7) | 202.005.005 | 001.014.004 |

*) EUT short description is used to simplify the identification of the EUT in this test report.

## 3.3. Auxiliary Equipment (AE): Type, S/N etc. and short descriptions

| AE short descrip-tion *) | Auxiliary Equipment | Type | S/N serial number | HW hardware status | SW software status |
|---|---|---|---|---|---|
| AE 1 | Loudspeaker | KL3 / 4-Ohm | -- | -- | -- |
| AE 2 | Microphone | ME 39 | -- | -- | -- |
| AE 3 | Antenna TRX mounted on a ground plane | Fender antenna from *Hirschmann* 920325-102 | -- | -- | -- |
| AE 4 | Antenna DRX mounted on a ground plane | Bumper telephone antenna from *Hirschmann* 920337-101 | -- | -- | -- |
| AE 5 | Antenna GPS mounted on a ground plane | Navilock NL-69AT | -- | -- | -- |

*) AE short description is used to simplify the identification of the auxiliary equipment in this test report.

## 3.4. EUT set-ups

| EUT set-up no.*) | Combination of EUT and AE | Remarks |
|---|---|---|
| set. 1 | EUT A + AE 1 + AE 2+ AE 3+ AE 4 + AE 5 | Used for radiated tests |
| set. 2 | EUT B + AE 1 + AE 2 | Used for conducted tests |

*) EUT set-up no. is used to simplify the identification of the EUT set-up in this test report.

## 3.5. EUT operating modes

| EUT operating mode no.*) | Description of operating modes | Additional information |
|---|---|---|
| 1 | FDD-Band 5<br><br>12.2 kbps RMC | A communication link is established between the mobile station (UE) and the test simulator. The transmitter is operated on its maximum rated output power class: 21 dBm or 24dBm nominal.<br>The input signal to the receiver is modulated with normal test modulation.<br>The wanted RF input signal level to the receiver of the mobile station is set to a level to provide a stable communication link according Table E5.1/Table E5.1A as described in 3GPP TS34.121, Annex E. |

*) EUT operating mode no. is used to simplify the test report.

## 3.6. Configuration of cables used for testing

| Cable number | Item | Type | S/N serial number | HW hardware status | Cable length |
|---|---|---|---|---|---|
| Cable 1 | Antenna line TRX | -- | -- | -- | 2.70 m |
| Cable 2 | Antenna line DRX | -- | -- | -- | 4.00 m |
| Cable 3 | Reduced cable harness | -- | -- | -- | 1,80 m |

# 4. Description of test system set-up's

## 4.1. Test system set-up for conducted measurements on antenna port

**Specification:** ANSI 63.10:2009

**General Description:** The EUT's RF-signal is coupled out by a suitable antenna coupling connector (1). The signal is first attenuated (2) before it is 0° divided by a power divider (3). One of the signal path is connected to the radio communication tester (4), other branch is connected to the spectrum – analyzer (5). The specific attenuation losses for both signal paths/branches are determined prior to the measurement within a set-up calibration. These are then taken into account by correcting the measurement readings on the spectrum-analyzer.

**Schematic:**

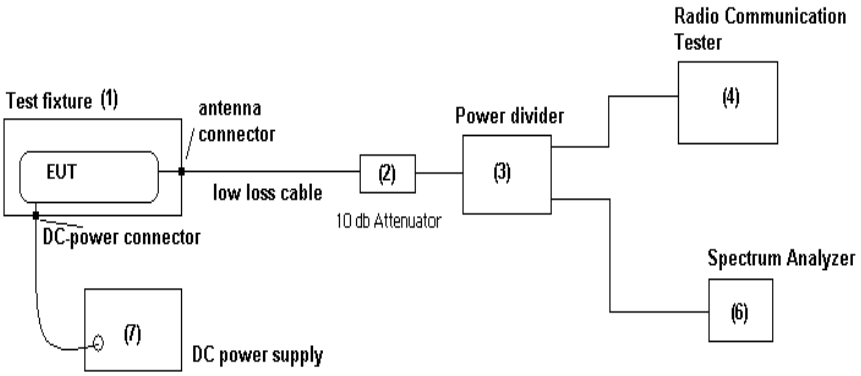


**Testing method:** ANSI 63.10:2009

## 4.2. Test system set-up for radiated magnetic field measurements below 30 MHz

**Specification:** ANSI C63.4-2009 chapter 8.2.1, ANSI C63.10-2009 chapter 6.4

**General Description:** Evaluating the radiated field emissions are done first by an exploratory emission measurement and a final measurement for most critical frequencies determined.

The loop antenna was placed at 1 m height above ground plane and 3 m measurement distance from set-up for investigations. Because of reduced measurement distance, correction data were applied, as stated in chapter "General Limit - Radiated field strength emissions below 30 MHz". The tests are performed in the semi anechoic room recognized by the regulatory commission.

**Schematic:**

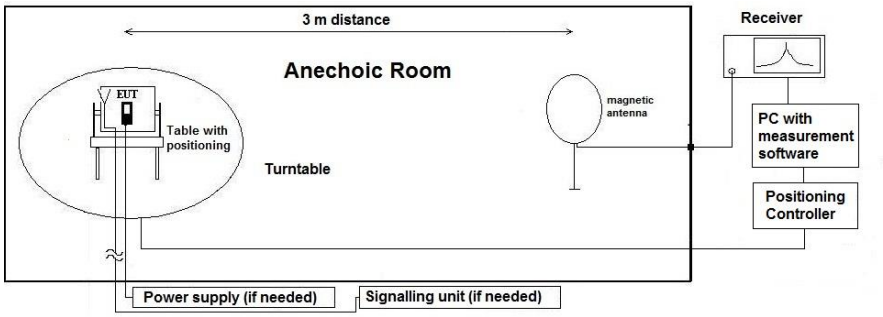


**Testing method:**

**Exploratory, preliminary measurement**
The EUT and it's associated accessories are placed on a non-conductive position manipulator (tipping device) of 0.8 m height which is placed on the turntable. By rotating the turntable (step 90°, range 0°to 360°) and the EUT itself either on 3-orthogonal axis (portable equipment) or 2-orthogonal axis (defined operational position of EUT), the emission spectrum was recorded. The loop antenna was moved at least to 2-perpendicular axes (antenna vector in direction of EUT and parallel to EUT) in order to maximize the emissions. The results are documented in a diagram. Critical frequencies (low margin to limit) are saved within a data reduction table for further investigations. If various operating modes are supported, further investigations are made to find the worst-case. Also the interconnection cables and equipment position were varied in order to maximize the emissions.

**Final measurement on critical frequencies**
Based on the exploratory measurements, the most critical frequencies are re-measured by maintaining the EUT's worst-case operation mode, cable position, etc.

First a frequency zoom around the critical frequency is done to locate the frequency more precisely. After this step, for all identified critical frequencies, the maximum peak was determined.

Following parameters were varied: the turntable angle continuously in the range 0 to 360 degree, the EUT itself either over 3-orthogonal axis (not defined usage position) or 2-orthogonal axis (defined usage position).

On the determined worst-case position, a final measurement with necessary bandwidth and detector according standard has been carried out.

**Formula:**

$E_C = E_R + AF + C_L + D_F - G_A$

$M = L_T - E_C$

AF =Antenna factor
$C_L$ = Cable loss
$D_F$= Distance correction factor
$E_C$ = Electrical field – corrected value
$E_R$ = Receiver reading
$G_A$= Gain of pre-amplifier (if used)
$L_T$ = Limit
M = Margin

All units are dB-units, positive margin means value is below limit.

**Distance correction:** Reference for applied correction (extrapolating) factors:
IEEC Transaction EMC, Vol. 47, No. 3 , Aug. 2005, Journal Paper
"*Extrapolating Near-field emissions of low frequency loop transmitters*".

## 4.3. Test system set-up for radiated spurious emission measurements

**Specification:** ANSI C63.4-2009 chapter 8, ANSI C63.10-2009 chapter 6.5&6.6

**General Description:** Evaluating the field emissions have to be done first by an exploratory emissions measurement and a final measurement for most critical frequencies. The tests are performed in a CISPR 16-4 compliant fully anechoic room (FAR) recognized by the regulatory commission. The measurement distance was set to 3 meter for frequencies up to 20 GHz and 1 meter above 20 GHz. A logarithmic periodic antenna is used for the frequency range 30 MHz to 1 GHz. The horn antenna is used for frequency range 1 GHz to 40 GHz. Due to use of a fully anechoic room the measurement antennas are set to fixed antenna height of 1.55 m (no height scan necessary) and the site validation criteria accord. ANSI63.10:2009 is fulfilled. The EUT is aligned within 3 dB beam width of the measurement antenna, on big EUTs several surface measurements are performed.

**Schematic:**

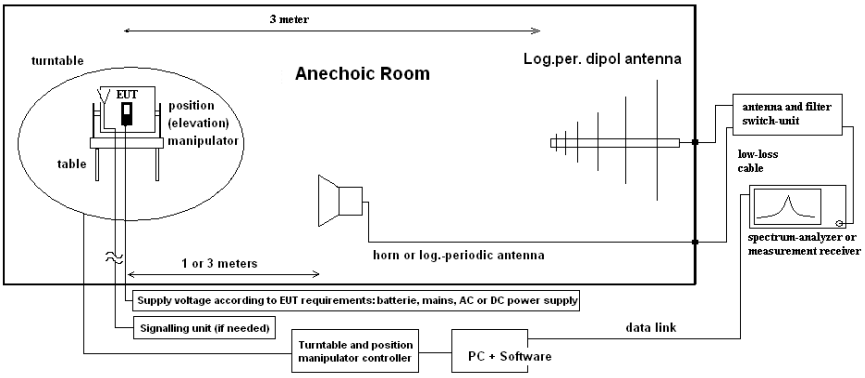


**Testing method:**

**Exploratory, preliminary measurements**
The EUT and its associated accessories are placed on a non-conductive position manipulator (tipping device) of 1.55 m height which is placed on the turntable. By rotating the turntable (range 0° to 360°, step 45°) and the EUT itself either on 3-orthogonal axis (portable equipment) or 2-orthogonal axis (defined operational position of EUT) the emission spectrum and it's characteristics was recorded with an EMI-receiver, broadband antenna and software.
The measurements are performed in horizontal and vertical polarization of the measurement antennas. The results are documented in a diagram. Critical frequencies (low margin to limit) are saved within a table for further investigations. If various operating modes are supported, further investigations are made to find the worst-case of them. Also the interconnection cables and equipment position were varied in order to maximize the emissions.

**Final measurement on critical frequencies**
Based on the exploratory measurements, the most critical frequencies are re-measured by maintaining the EUT's worst-case operation mode, cable position, etc.
First a frequency zoom around the critical frequency is done to locate the frequency more precisely. After this step, for all identified critical frequencies, the maximum peak was determined.
Following parameters were varied: the turntable angle continuously in the range 0 to 360 degree, the EUT itself either over 3-orthogonal axis (not defined usage position) or 2-orthogonal axis (defined usage position). The measurement antenna height is fixed to 1.55 m.
On the determined worst-case position, a final measurement with necessary bandwidth and detector according standard has been carried out.
The readings on the spectrum analyzer are corrected with conversion value between field strength and E(I)RP, so the readings shown are equivalent to ERP/EIRP values. Critical measurements near the limit are re-measured with a substitution method accord. ANSI/TIA/EIA 603 C/D

**Formula:**

$E_C = E_R + AF + C_L + D_F - G_A$ (1)

$Ec_{E(I)RP} = Ec - 95.2$ dB

$M = L_T - Ec_{E(I)RP}$

$E_C$ = Electrical field – corrected value
$E_R$ = Receiver reading
M = Margin
$L_T$ = Limit
AF = Antenna factor
$C_L$ = Cable loss
$D_F$ = Distance correction factor (if used)
$G_A$ = Gain of pre-amplifier (if used)
$Ec_{E(I)RP}$ = Electrical field corrected for E(I)RP

All units are dB-units, positive margin means value is below limit.

# 5. Measurements

## 5.1. General Limit - Radiated field strength emissions below 30 MHz

### 5.1.1. Test location and equipment

| | | | | | | |
|---|---|---|---|---|---|---|
| test location | ☒ CETECOM Essen (Chapter. 2.2.1) | | ☐ Please see Chapter. 2.2.2 | | ☐ Please see Chapter. 2.2.3 | |
| test site | ☒ 441 EMI SAR | ☐ 487 SAR NSA | ☐ 347 Radio.lab. | | ☐ | ☐ |
| receiver | ☐ 377 ESCS30 | ☒ 001 ESS | ☐ | ☐ | ☐ | ☐ |
| spectr. analys. | ☐ 584 FSU | ☐ 120 FSEM | ☐ 264 FSEK | ☐ | ☐ | ☐ |
| antenna | ☐ 574 BTA-L | ☐ 133 EMCO3115 | ☐ 302 BBHA9170 | ☐ 289 CBL 6141 | ☒ 030 HFH-Z2 | ☐ 477 GPS |
| signaling | ☐ 392 MT8820A | ☐ 371 CBT32 | ☒ 547 CMU | ☐ 594 CMW | | |
| otherwise | ☐ 400 FTC40x15E | ☐ 401 FTC40x15E | ☐ 110 USB LWL | ☐ 482 Filter Matrix | ☐ 378 RadiSense | |
| DC power | ☒ 456 EA 3013A | ☐ 457 EA 3013A | ☐ 459 EA 2032-50 | ☐ 268 EA- 3050 | ☐ 494 AG6632A | ☐ 498 NGPE 40 |
| line voltage | ☐ 230 V 50 Hz via public mains | | ☐ 060 120 V 60 Hz via PAS 5000 | | | |

### 5.1.2. Requirements

| | | | | |
|---|---|---|---|---|
| **FCC** | Part 15, Subpart C, §15.205 & §15.209 | | | |
| **IC** | RSS-Gen., Issue 3 | | | |
| **ANSI** | C63.10-2009 | | | |
| Frequency [MHz] | Field strength limit [µV/m] | [dBµV/m] | Distance [m] | Remarks |
| 0.009 – 0.490 | 2400/f (kHz) | 67.6 – 20Log(f) (kHz) | 300 | Correction factor used due to measurement distance of 3 m |
| 0.490 – 1.705 | 24000/f (kHz) | 87.6 – 20Log(f) (kHz) | 30 | Correction factor used due to measurement distance of 3 m |
| 1.705 – 30 | 30 | 29.5 | 30 | Correction factor used due to measurement distance of 3 m |

### 5.1.3. Test condition and test set-up

| | | | | |
|---|---|---|---|---|
| Signal link to test system (if used): | | ☒ air link | ☐ cable connection | ☐ none |
| EUT-grounding | | ☒ none | ☐ with power supply | ☐ additional connection |
| Equipment set up | | ☒ table top | | ☐ floor standing |
| Climatic conditions | | Temperature: (22±3°C) | | Rel. humidity: (40±20)% |
| EMI-Receiver or Analyzer Settings | Scan data | ☒ 9 – 150 kHz RBW/VBW = 200 Hz Scan step = 80 Hz<br>☒ 150 kHz – 30 MHz RBW/VBW = 9 kHz Scan step = 4 kHz<br>☐ other: | | |
| | Scan-Mode<br>Detector<br>Mode:<br>Sweep-Time | ☒ 6 dB EMI-Receiver Mode ☐ 3dB Spectrum analyser Mode<br>Peak (pre-measurement) and Quasi-PK/Average (final if applicable)<br>Repetitive-Scan, max-hold<br>Coupled – calibrated display if continuous signal otherwise adapted to EUT's individual transmission duty-cycle | | |
| General measurement procedures | | Please see chapter "Test system set-up radiated magnetic field measurements below 30 MHz" | | |

### 5.1.4. Measurement Results

The results are presented below in summary form only. The EUT is put on operation on middle channel only. If critical peaks are found (Margin <10 dB) the lowest and highest channels will be performed too.For more information please see the diagrams.

**Table of measurement results:**

| Diagram No. | Carrier Channel | | Frequency range | Set-up no. | OP-mode no. | Remark | Used detector | | | Result |
|---|---|---|---|---|---|---|---|---|---|---|
| | Range | No. | | | | | PK | AV | QP | |
| -- | Low | -- | 9 kHz-30 MHz | -- | -- | no critical peaks found on middle channel, low channel not tested | ☐ | ☐ | ☐ | -- |
| 2.13 | Middle | 4182 | 9 kHz-30 MHz | 1 | 1 | -- | ☒ | ☐ | ☐ | passed |
| -- | High | -- | 9 kHz-30 MHz | -- | -- | no critical peaks found on middle channel, high channel not tested | ☐ | ☐ | ☐ | -- |

### 5.1.5. Correction factors due to reduced meas. distance (f< 30 MHz)

The used correction factors when the measurement distance is reduced, are taken from IEEC Transaction EMC, Vol 47, No.3, Aug. 2005, Journal Paper *"EXTRAPOLATING NEAR-FIELD EMISSIONS OF LOW-FREQUENCY LOOP TRANSMITTERS"*.

| Used Transducer factors (f < 30 MHz) | | | | | |
|---|---|---|---|---|---|
| | | | | | |
| 1 | 2 | 3 | 4 | 5 | 6 |
| | | | | | =2+3+4+5 |
| Frequency | Antenna factor | Corection factor | | Cable loss | Transducer factor |
| | | 300m to 3m | 30m to 3m | | |
| kHz | dB µV/m | dB | dB | dB | dB µV/m |
| 9,0 | 20,0 | -116,7 | | 0,0 | -96,7 |
| 10,6 | 20,0 | -116,7 | | 0,0 | -96,7 |
| 12,6 | 20,0 | -116,7 | | 0,0 | -96,7 |
| 14,8 | 20,0 | -116,7 | | 0,0 | -96,7 |
| 17,5 | 20,0 | -116,6 | | 0,0 | -96,6 |
| 20,7 | 20,0 | -116,6 | | 0,0 | -96,6 |
| 24,4 | 20,0 | -116,6 | | 0,0 | -96,6 |
| 28,9 | 20,0 | -116,6 | | 0,0 | -96,6 |
| 34,1 | 20,0 | -116,5 | | 0,0 | -96,5 |
| 40,3 | 20,0 | -116,4 | | 0,0 | -96,4 |
| 47,6 | 20,0 | -116,3 | | 0,0 | -96,3 |
| 56,2 | 20,0 | -116,2 | | 0,0 | -96,2 |
| 66,4 | 20,0 | -116,0 | | 0,0 | -96,0 |
| 78,4 | 20,0 | -115,8 | | 0,0 | -95,8 |
| 92,7 | 20,0 | -115,4 | | 0,0 | -95,4 |
| 109,4 | 20,0 | -115,0 | | 0,0 | -95,0 |
| 129,3 | 20,0 | -114,5 | | 0,0 | -94,5 |
| 152,7 | 20,0 | -113,9 | | 0,0 | -93,9 |
| 180,4 | 20,0 | -113,1 | | 0,0 | -93,1 |
| 213,1 | 20,0 | -112,2 | | 0,0 | -92,2 |
| 251,7 | 20,0 | -111,3 | | 0,0 | -91,3 |
| 297,3 | 20,0 | -108,3 | | 0,0 | -88,3 |
| 351,2 | 20,0 | -105,2 | | 0,0 | -85,2 |
| 414,8 | 20,0 | -102,1 | | 0,0 | -82,1 |
| 490,0 | 20,0 | -99,1 | | 0,0 | -79,1 |
| 490,0 | 20,0 | | -56,4 | 0,1 | -36,3 |
| 582,0 | 20,0 | | -56,2 | 0,1 | -36,1 |
| 690,0 | 20,0 | | -56,0 | 0,2 | -35,8 |
| 820,0 | 20,0 | | -55,7 | 0,2 | -35,5 |
| 973,0 | 20,0 | | -55,4 | 0,2 | -35,2 |
| 1.155,0 | 20,0 | | -54,9 | 0,3 | -34,6 |
| 1.371,0 | 20,0 | | -54,4 | 0,3 | -34,1 |
| 1.627,0 | 20,0 | | -53,7 | 0,3 | -33,4 |
| 1.931,0 | 20,0 | | -52,9 | 0,4 | -32,5 |
| 2.292,0 | 20,0 | | -52,0 | 0,4 | -31,6 |
| 2.721,0 | 20,0 | | -49,8 | 0,5 | -29,3 |
| 3.230,0 | 20,0 | | -46,6 | 0,5 | -26,1 |
| 3.834,0 | 20,0 | | -43,3 | 0,6 | -22,7 |
| 4.551,0 | 20,0 | | -40,1 | 0,6 | -19,5 |
| 5.402,0 | 20,0 | | -36,8 | 0,7 | -16,1 |
| 6.412,0 | 20,0 | | -33,5 | 0,7 | -12,8 |
| 7.612,0 | 20,0 | | -30,3 | 0,8 | -9,5 |
| 9.035,0 | 20,0 | | -27,0 | 0,8 | -6,2 |
| 10.725,0 | 20,0 | | -23,9 | 0,9 | -3,0 |
| 12.730,0 | 20,0 | | -21,2 | 0,9 | -0,3 |
| 15.111,0 | 20,0 | | -19,3 | 1,0 | 1,7 |
| 17.937,0 | 20,0 | | -18,4 | 1,0 | 2,6 |
| 21.292,0 | 20,0 | | -18,2 | 1,1 | 2,9 |
| 25.274,0 | 20,0 | | -18,3 | 1,1 | 2,8 |
| 30.000,0 | 20,0 | | -18,4 | 1,2 | 2,8 |

## 5.2. RF-Parameter - Radiated out of Band RF emissions and Band Edge

### 5.2.1. Test location and equipments (for reference numbers please see chapter 'List of test equipment')

| | | | | | | |
|---|---|---|---|---|---|---|
| test location | ☒ CETECOM Essen (Chapter. 2.2.1) | | ☐ Please see Chapter. 2.2.2 | | ☐ Please see Chapter. 2.2.3 | |
| test site | ☐ 441 EMI SAR | ☐ 487 SAR NSA | ☒ 443 FAR | ☐ 347 Radio.lab.1 | ☐ 347 Radio.lab.2 | |
| receiver | ☐ 377 ESCS30 | ☐ 001 ESS | ☐ 489 ESU 40 | ☐ ESU 26 | | |
| spectr. analys. | ☐ 584 FSU | ☐ 120 FSEM | ☒ 264 FSEK | | | |
| antenna | ☒ 439 HL 562 | ☒ 549 HL 025 | ☐ 302 BBHA9170 | ☐ 289 CBL 6141 | ☐ 030 HFH-Z2 | ☐ 477 GPS |
| signaling | ☐ 017 CMD 65 | ☐ 323 CMD 55 | ☐ 340 CMD 55 | | | |
| signaling | ☐ 392 MT8820A | ☒ 546 CMU | ☐ 547 CMU | | | |
| power supply | ☒ 611 E3636A | ☐ 457 EA 3013A | ☐ 459 EA 2032-50 | ☐ 268 EA- 3050 | ☐ 494 AG6632A | ☐ 498 NGPE 40 |
| otherwise | ☐ 529 6dB divider | ☐ 530 6dB Att. | ☐ 110 USB LWL | ☐ 482 Filter Matrix | ☐ 431 Near field | |
| line voltage | ☐ 230 V 50 Hz via public mains | | ☐ 060 110 V/ 60 Hz via PAS 5000 | | | |

### 5.2.2. Requirements and limits

| | |
|---|---|
| **FCC** | §2.1053(a)-radiated , §2.1057(a)(a) , §22.917(a)(b) ; |
| **IC** | RSS-132, Issue 3: 5.5(i)(ii) |
| **Limit** | „the power of emissions shall be attenuated below the transmitter output power (P) by at least 43+10Log(P) dB“<br>-> Resulting limit for all power levels of the Mobile Phone: -13dBm |

### 5.2.3. Test condition and test set-up

| | | | |
|---|---|---|---|
| link to test system (if used): | ☒ air link | ☐ cable connection | ☐ |
| EUT-grounding | ☒ none | ☐ with power supply | ☐ additional connection |
| Equipment set up | ☒ table top | | ☐ floor standing |
| Climatic conditions | Temperature: (22±3°C) | | Rel. humidity: (40±20)% |
| Test system set-up | Please see chapter “Test system set-up for radiated spurious emission measurements up to 20 GHz” | | |
| Measurement method | The spectrum was scanned from 9 kHz to the 10th harmonic of the highest frequency generated within the equipment. A PEAK detector was used except measurements near the block-edge where a AVERAGE detector applied for critical measurements.<br><br>According chapter 4.2<br><br>Valid for band-edge compliance: 1% RBW was used due regulations on band edge on first 1MHz near band-edges. | | |
| EUT settings | A call was established on highest power transmit conditions in RMC99 mode.<br><br>The measurements were made at the low, middle and high carrier frequencies of each of the supported operating band. Choosing three TX-carrier frequencies of the wireless device, should be sufficient to demonstrate compliance. | | |

## Spectrum-analyzer settings for FDD Band 5

| | Start freq. MHz | Stop freq. MHz | R-BW MHz | V-BW MHz | Sweep time sec. | Att. | Detector |
|---|---|---|---|---|---|---|---|
| Sweep 1 (subrange 1) | 30 | 1000 | 1 | 1 | 10 | 10 | MaxH-PK |
| Sweep 1 (subrange 2) | 1000 | 2800 | 1 | 1 | 15 | 0 | MaxH-PK |
| Sweep 1 (subrange 3) | 2800 | 12000 | 1 | 1 | 160 | 10 | MaxH-PK |
| Sweep 2a (Band-Edge) | 823 | 824 | 0.05 1.) | 0.5 | 30 | 35 | MaxH-PK |
| Sweep 2b (Band-Edge) | 823 | 824 | 0.05 1.) | 0.5 | 30 | 35 | MaxH-AV |
| Sweep 3a (Band-Edge) | 850 | 851 | 0.05 1.) | 0.5 | 30 | 35 | MaxH-PK |
| Sweep 3b (Band-Edge) | 850 | 851 | 0.05 1.) | 0.5 | 30 | 35 | MaxH-AV |

**Remark:** 1% of EBW used for measurements

### 5.2.4. Results

The results are presented below in summary form only. For more information please see each diagramm enclosed in annex 4.

#### 5.2.4.1. FDD Band 5: Op. Mode 1, Set-up 1

| Dia-gram no. | Carrier Channel | | Frequency range | OP-mode no. | Remark | Used detector | | | Result |
|---|---|---|---|---|---|---|---|---|---|
| | Range | No. | | | | PK | AV | QP | |
| 8.50a 8.50b | Low | 4132 (826.4MHz) | 30 MHz to 9 (12) GHz | 1 | Carrier visible on diagram, 825.05MHz, not relevant for results | ☒ | ☐ | ☐ | pass |
| 9.50a 9.50b | Low | | 823 – 824 MHz | | Band Edge Compliance | ☐ | ☒ | ☐ | pass |
| 8.51a 8.51b | Middle | 4183 (836.6MHz) | 30 MHz to 9 (12) GHz | | Carrier visible on diagram on 836.71MHz, not relevant for results | ☒ | ☐ | ☐ | pass |
| 8.52a 8.52b | High | 4233 (846.6MHz) | 30 MHz to 12 GHz | | Carrier visible on diagram on 846.4MHz, not relevant for results | ☒ | ☐ | ☐ | pass |
| 9.51a 9.51b | High | | 849 – 850 MHz | | Band-Edge compliance | ☐ | ☒ | ☐ | pass |

Remark: some frequency sweeps have been performed up to 12GHz, due software settings

## 5.3. RF-Parameter - RF Peak power output radiated

### 5.3.1. Test location and equipment (for reference numbers please see chapter 'List of test equipment')

| | | | | | | |
|---|---|---|---|---|---|---|
| test location | ☒ CETECOM Essen (Chapter. 2.2.1) | | ☐ Please see Chapter. 2.2.2 | | ☐ Please see Chapter. 2.2.3 | |
| test site | ☐ 441 EMI SAR | ☐ 487 SAR NSA | ☒ 443 FAR | | ☐ | ☐ |
| receiver | ☐ 377 ESCS30 | ☐ 001 ESS | ☐ 489 ESU 40 | ☐ 620 ESU 26 | ☐ | ☐ |
| spectr. analys. | ☐ 584 FSU | ☐ 120 FSEM | ☒ 264 FSEK | ☐ | ☐ | ☐ |
| antenna | ☐ 574 BTA-L | ☐ 133 EMCO3115 | ☐ 302 BBHA9170 | ☒ 439 HL 562 | ☒ 549 HL025 | |
| signalling | ☐ 392 MT8820A | ☐ 436 CMU | ☒ 546 CMU | | | |
| otherwise | ☐ 400 FTC40x15E | ☐ 401 FTC40x15E | ☐ 110 USB LWL | ☐ 482 Filter Matrix | ☐ 378 RadiSense | |
| DC power | ☒ 611 E3636A | ☐ 463 HP3245A | ☐ 459 EA 2032-50 | ☐ 268 EA- 3050 | ☐ 494 AG6632A | ☐ 498 NGPE 40 |
| line voltage | ☐ 230 V 50 Hz via public mains | | ☐ 060 110 V/ 60 Hz via PAS 5000 | | | |

### 5.3.2. Requirements and limits

| | |
|---|---|
| **FCC** | §2.1046(a), §22.913 |
| **IC** | RSS-132:5.4 + SRSP 503:5.1.3 for FDD Band 5+ PAR PK-AV ≤ 13 dB |
| **Limit** | Maximum Power Output of the wireless device should be determined while measured radiated E(I)RP. |
| | Limit FDD Band 5: 7 Watt ERP (38.4 dBm) |

### 5.3.3. Test condition and test set-up

| | | | | |
|---|---|---|---|---|
| link to test system (if used): | | ☒ air link | ☐ cable connection | ☐ |
| EUT-grounding | | ☒ none | ☐ with power supply | ☐ additional connection |
| Equipment set up | | ☒ table top | | ☐ floor standing |
| Climatic conditions | | Temperature: (22±3°C) | | Rel. humidity: (40±20)% |
| Test system set-up | | Please see chapter "Test system set-up for radiated spurious emission measurements up to 20 GHz" | | |
| Spectrum Analyzer Settings | **Parameter:**<br><br>Scan Mode<br>Span<br>RBW<br>VBW<br>Sweep time<br>Sweep mode<br>Detector | Spectrum analyser mode<br>100 MHz<br>10 MHz<br>10 MHz<br>Coupled<br>repetitive<br>Peak | | |
| Measurement method | | The measurements were performed by using the **substitution method** (ANSI/TIA/EIA 603C/D) with a spectrum-analyzer. This method can be described like follows:<br>1. choosing of suitable spectrum-analyzer settings for performing the measurements. This settings of the spectrum analyzer must be maintained for both stages of the measurements: EUT emission measurements and also for measurements of the substituted level.<br>2. The maximum level of the peak power was recorded, while the emissions were maximized by rotating the EUT in three orthogonal axes, which was situated on a non-conductive turntable of 1.55 m height ($P_{MEAS,1}$). This was performed for both measuring antenna polarisations (vertical/horizontal), the maximum of both values is used for further measurements and final substitution ($P_{MEAS,\,1,\,MAX}$).<br>3. As the maximum emission is recorded, the EUT is replaced by a frequency dependant suitable antenna, which is connected to a RF-signal generator, which is transmitting on the determined worst-case frequency as determined in step 2.<br>4. The RF-signal level of the signal generator is adjusted as long the same worst-case level determined first step is measured at the spectrum analyzer ($P_{SMHU}=P_{MEAS,1,\,MAX}$)<br>5. Than the RF-signal cable is disconnected from the antenna and connected to a power-level meter. The level is determined ($P_{MEAS,2}$).<br>6. The final result is calculated by adding the ERP/EIRP gain of the antenna which substitutes the EUT. $P_{EUT,SUBST} = P_{MEAS,2} + G_{ANTENNA}$ | | |
| EUT settings | | A call was established on highest power transmit conditions in RMC99 mode.<br><br>The measurements were made at the low, middle and high carrier frequencies of each of the supported operating band. Choosing three TX-carrier frequencies of the wireless device, should be sufficient to demonstrate compliance. | | |

### 5.3.4. Results

| EUT | | | | Set-up 1, Op.Mode 1 | | | | |
|---|---|---|---|---|---|---|---|---|
| Operating Mode | Channel | | | Peak Output Power [dBm] | | | Antenna Polarisations | Result |
| | Range | No. | Nominal Frequency [MHz] | PK | AV | | | |
| FDD Band 5 | Low | 4132 | 826.4 | 27.6 | 1.) | ERP-Value | H and V | passed |
| | Middle | 4183 | 836.6 | 27.9 | | | | |
| | High | 4233 | 846.6 | 26.6 | | | | |

Remark: 1.) see conducted measurements for PAR factor

## 5.4. RF-Parameter - RF Peak power output conducted

### 5.4.1. Test location and equipments (for reference numbers please see chapter 'List of test equipment')

| | | | | | | |
|---|---|---|---|---|---|---|
| test location | ☒ CETECOM Essen (Chapter. 2.2.1) | | ☐ Please see Chapter. 2.2.2 | | | |
| test site | ☐ 347 Radio.lab. 1 | ☒ Radio.lab. 2 | | | | |
| spectr. analys. | ☐ 584 FSU | ☐ 489 ESU 40 | ☐ 264 FSEK | ☐ 620 ESU 26 | | |
| signaling | ☐ 392 MT8820A | ☒ 436 CMU | ☐ 547 CMU | ☐ 460 CMU | | |
| otherwise | ☐ 400 FTC40x15E | ☐ 401 FTC40x15E | ☐ 110 USB LWL | ☐ 482 Filter Matrix | ☐ 378 RadiSense | |
| DC power | ☐ 611 E3636A | ☐ 463 HP3245A | ☐ 459 EA 2032-50 | ☐ 268 EA- 3050 | ☐ 494 AG6632A | ☒ 498 NGPE 40 |
| otherwise | ☒ 530 10 dB Attn | ☐ 248 6 dB Att. | ☐ 529 Power div. | ☐ - cable OTA20 | | |
| line voltage | ☐ 230 V 50 Hz via public mains | | ☐ 060 110 V/ 60 Hz via PAS 5000 | | | |

### 5.4.2. Requirements and limits

| | |
|---|---|
| **FCC** | ☒ §2.1046<br>☒ §22.913(a)(2)<br>☐ § 24.232(c)<br>☐ § 27.50(4) |
| **IC** | ☒ RSS-132:4.4 + SRSP 503:5.1.3<br>☐ RSS-133:4.1/6.4 + SRSP-510:5.1.2<br>☐ RSS-139: 6.4 |
| **Limit** | Maximum Power Output of the mobile phone should be determined while measured radiated E(I)RP. |
| | ☒ Limit FDD Band 5: 7 Watt ERP / 11.5 dBm EIRP (38.4 dBm ERP / 40.6 dBm EIRP) |
| | ☐ Limit FDD Band 2: 2 Watt EIRP (33.0 dBm) |
| | ☐ Limit FDD Band 4: 1 Watt EIRP (30.0 dBm) |

### 5.4.3. Test condition and test set-up

| | | |
|---|---|---|
| Climatic conditions | Temperature: (22±3°C) | Rel. humidity: (40±20)% |
| Test system set-up | Please see chapter “Test system set-up for conducted measurements on antenna port” ANRITSU | |
| Measurement method | The measurements were performed with the integrated power measurement function of the „radio communication tester CMU200 from Rohde&Schwarz company. In this way spectrum-analyzers instrument limitations can be avoided or minimized. Instead, CMU manufacturers declared measurement error can be considered for this measurement.<br><br>The attenuation (insertion loss) at the RF Inputs/Outputs of CMU were set according the path loss of the test set-up, determined in a step before starting the measurements. A suitable artificial antenna or RF-connector is provided by the applicant in order to perform the conducted measurements. Any data provided with the artificial antenna or connector, have been taken in account in order to correct the measurement data. (typical 0.3dB for attenuation of antenna connector)<br><br>Peak and Average Values have been recorded for each channel and band. | |
| EUT settings | A call was established on highest power transmit conditions in GMSK and RMC99 mode.<br><br>UE is set TX mode, highest transmit power conditions, DTX, MPR or other power saving techniques have been disabled<br><br>The measurements were made at the low, middle and high carrier frequencies of each of the supported operating band. Choosing three TX-carrier frequencies of the mobile phone, should be sufficient to demonstrate compliance. | |

### 5.4.4. Measurement results

| FDD Band 5 | | | | | | | | |
|---|---|---|---|---|---|---|---|---|
| EUT | Set-up 4, Op. Mode 1 | | | | | | | |
| **Test case** | **Power value [dBm]** | | | | | | Limit [dBm] | Result |
| | **UARFCN no. 4132 (826.4MHz)** | | **UARFCN no. 4183 (836.6MHz)** | | **UARFCN no. 4233 (846.6MHz)** | | | |
| | PK | AV | PK | AV | PK | AV | | |
| Release 99 12.2kbps RMC | 26.53 | 22.80 | 26.62 | 22.95 | 26.46 | 22.74 | 38.4 | Pass |

**Remark:**
1.) values within applicant's declared power range (tune-up range info)
2.) Maximum PAR-Faktor 3.7 dB < 13dB

## 5.5. RF-Parameter - Conducted out of Band RF emissions and Band Edge

### 5.5.1. Test location and equipments (for reference numbers please see chapter 'List of test equipment')

| | | | | | | |
|---|---|---|---|---|---|---|
| test location | ☒ CETECOM Essen (Chapter. 2.2.1) | | ☐ Please see Chapter. 2.2.2 | | ☐ Please see Chapter. 2.2.3 | |
| test site | ☐ 347 Radio.lab. 1 | ☒ Radio.lab. 2 | | | | |
| spectr. analys. | ☐ 584 FSU | ☐ 120 FSEM | ☐ 264 FSEK | ☒ 489 ESU | | |
| signaling | ☐ 017 CMD 65 | ☐ 323 CMD 55 | ☐ 340 CMD 55 | | | |
| signaling | ☐ 392 MT8820A | ☐ 436 CMU | ☒ 670 CMU | | | |
| power supply | ☐ 611 E3636A | ☐ 457 EA 3013A | ☐ 459 EA 2032-50 | ☐ 268 EA- 3050 | ☐ 494 AG6632A | ☒ 498 NGPE 40 |
| otherwise | ☒ 529 6dB divider | ☒ 530 10dB Attn. | ☐ 431 Near field | | | |
| line voltage | ☐ 230 V 50 Hz via public mains | | ☐ 060 110 V/ 60 Hz via PAS 5000 | | | |

### 5.5.2. Requirements and limits

| | |
|---|---|
| **FCC** | §2.1051-conducted, §2.1057, §22.917(a)(b) |
| **IC** | RSS-132, Issue 3: 5.5(i)(ii) |
| **Limit** | „the power of emissions shall be attenuated below the transmitter output power (p) by at least 43+10Log(P) dB“ |

### 5.5.3. Test condition and test set-up

| | | |
|---|---|---|
| Climatic conditions | Temperature: (22±3°C) | Rel. humidity: (40±20)% |
| Test system set-up | Please see chapter “Test system set-up for conducted measurements on antenna port” | |
| Measurement method | The spectrum was scanned from 9 kHz to the 10th harmonic of the highest frequency generated within the equipment. A PEAK detector was used except measurements near the block-edge where a AVERAGE detector applied.<br><br>A suitable artificial antenna or RF-connector is provided by the applicant in order to perform the conducted measurements. Any data provided with the artificial antenna or connector, have been taken in account in order to correct the measurement data. (typical 0.3dB for attenuation of antenna connector) | |
| Spectrum-Analyzer settings | See below tables | |
| EUT settings | A call was established on highest power transmit conditions in RMC99 mode.<br><br>The measurements were made at the low, middle and high carrier frequencies of each of the supported operating band. Choosing three TX-carrier frequencies of the wireless device, should be sufficient to demonstrate compliance. | |

## Spectrum-Analyzer Settings FDD Band 5

| | Start freq. MHz | Stop freq. MHz | R-BW MHz | V-BW MHz | Sweep time sec. | Att. | Detector |
|---|---|---|---|---|---|---|---|
| Sweep 1 (subrange 1) | 0.009 | 0.150 | 0.0001 | --[1.)] | 10 | 25 | MaxH-PK |
| Sweep 1 (subrange 2) | 0.150 | 1 | 0.009 | --[1.)] | 10 | 25 | MaxH-PK |
| Sweep 1 (subrange 3) | 1 | 30 | 0.1 | --[1.)] | 5 | 25 | MaxH-PK |
| Sweep 2 (subrange 1) | 30 | 9000 | 1 | --[1.)] | >60 | 35 | MaxH-PK |
| Sweep 3a (Band-Edge) | 823 | 824 | 0.05 [2.)] | --[1.)] | 30 | 35 | MaxH-PK |
| Sweep 3b (Band-Edge) | 823 | 824 | 0.05 [2.)] | --[1.)] | 30 | 35 | MaxH-AV |
| Sweep 4a (Band-Edge) | 850 | 851 | 0.05 [2.)] | --[1.)] | 30 | 35 | MaxH-PK |
| Sweep 4b (Band-Edge) | 850 | 851 | 0.05 [2.)] | --[1.)] | 30 | 35 | MaxH-AV |

Remark:
1.) EMI 6dB receiver mode used
2.) 1% of EBW used for measurements

### 5.5.4. Results

The results are presented below in summary form only. For more information please see each diagramm enclosed in annex 4.

#### 5.5.4.1. FDD Band 5: Op. Mode 1, Set-up 2

| Dia-gram no. | Carrier Channel | | Frequency range | OP-mode no. | Remark | Used detector | | | Result |
|---|---|---|---|---|---|---|---|---|---|
| | Range | No. | | | | PK | AV | QP | |
| 36.40 | Low | 4132 (826.4MHz) | 9kHz to 30MHz | 1 | -- | ☒ | ☐ | ☐ | passed |
| 36.41 | Low | | 30 MHz to 9GHz | | Carrier visible on diagram on 827.6MHz, not relevant for results | ☒ | ☐ | ☐ | passed |
| 37.40 | Low | | 823 – 824 MHz | | Band Edge Compliance | ☒ | ☐ | ☐ | passed |
| 36.42 | Middle | 4183 (836.6MHz) | 9kHz to 30MHz | | -- | ☒ | ☐ | ☐ | passed |
| 36.43 | Middle | | 30 MHz to 9GHz | | Carrier visible on diagram on 836MHz, not relevant for results | ☒ | ☐ | ☐ | passed |
| 36.44 | High | 4233 (846.6MHz) | 9kHz to 30MHz | | -- | ☒ | ☐ | ☐ | passed |
| 36.45 | High | | 30 MHz to 9GHz | | Carrier visible on diagram on 845.6MHz, not relevant for results | ☒ | ☐ | ☐ | passed |
| 37.41 | High | | 849 – 850 MHz | | Band-Edge compliance | ☒ | ☐ | ☐ | passed |

Remark: --

## 5.6. RF-Parameter - Occupied bandwidth and emission bandwidth

### 5.6.1. Test location and equipments (for reference numbers please see chapter 'List of test equipment')

| | | | | | | |
|---|---|---|---|---|---|---|
| test site | ☐ 347 Radio.lab. 1 | ☒ Radio.lab. 2 | | | | |
| spectr. analys. | ☐ 584 FSU | ☐ 489 ESU | ☐ 264 FSEK | ☒ 620 ESU26 | | |
| attenuator | ☒ 530 10 dB | ☐ | ☐ | | | |
| signaling | ☐ 392 MT8820A | ☐ 436 CMU | ☒ 547 CMU | | | |
| DC Power | ☐ 611 E3636A | ☐ 087 EA3013 | ☒ 354 NGPE 40 | ☐ 086 LNG50-10 | | |
| otherwise | ☒ 529 6dB divider | ☒ 530 10dB Attn. | | | | |
| line voltage | ☐ 230 V 50 Hz via public mains | | ☐ 060 110 V/ 60 Hz via PAS 5000 | | | |

### 5.6.2. Requirements and Limits

| | | |
|---|---|---|
| FCC | CFR47, §2.202(a), §2.1049, §22.917(b) | „the **occupied bandwidth** is the frequency bandwidth, such that, below it lower and above it upper frequency limits, the mean powers radiated are each equal to 0.5 percent of the total mean power radiated" |
| IC | RSS-Gen, Issue 3: §4.6.1 | |
| ANSI | C63.10-2009 | |

### 5.6.3. Test condition and test set-up

| | | | |
|---|---|---|---|
| Climatic conditions | | Temperature: (22±3°C) | Rel. humidity: (40±20)% |
| Test system set-up | | Please see chapter "Test system set-up for conducted measurements at antenna port" | |
| Spectrum Analyzer Settings | Parameter | Occupied bandwidth: | Emission bandwidth |
| | Scan Mode<br>Span<br>RBW<br>VBW<br>Sweep time<br>Sweep mode<br>Detector | Spectrum analyser mode<br>6 MHz<br>50 kHz<br>300 kHz<br>60 Sec<br>Single max-hold<br>RMS | Spectrum analyser mode<br>6 MHz<br>50 kHz<br>300 kHz<br>Coupled<br>Repetitive, max-hold<br>PK |
| Measurement method | | The used spectrum analyzer FSE or ESU from Rohde & Schwarz contains an integrated function to calculate the occupied bandwidth automatically. From left and right display margin, the upper and lower frequency points where the accumulated power becomes 0.5% of the total power, are calculated. Subtracting the previous determined two frequency points, yields the occupied bandwidth. | Bandwidth defined between 2 markers with are 26dBc compared to highest In-Band Peak Emission. |
| EUT settings | | A call was established on highest power transmit conditions in RMC99 mode.<br><br>The measurements were made at the low, middle and high carrier frequencies of each of the supported operating band. Choosing three TX-carrier frequencies of the wireless device, should be sufficient to demonstrate compliance. | |

### 5.6.4. Results

| Operating mode/band | Channel no. | | Occupied 99% bandwidth [MHz] | 26 dBc Emission bandwidth [MHz] |
|---|---|---|---|---|
| | Channel-Range | Channel No. | | |
| Set-up 2, Op-Mode 1 | | | | |
| FDD Band 5 | Channel low (826.4 MHz) | 4132 | 4.1730 | 4.6346 |
| | Channel Middle (836.6 MHz) | 4183 | 4.1634 | 4.6346 |
| | Channel High (846.6 MHz) | 4233 | 4.1634 | 4.6250 |

Remarks: see diagrams in separate annex 4

## 5.7. RF-Parameter - Frequency stability on temperature and voltage variations

### 5.7.1. Test location and equipments (for reference numbers please see chapter 'List of test equipment')

| | | | | | | |
|---|---|---|---|---|---|---|
| test location | ☒ CETECOM Essen (Chapter. 2.2.1) | | ☐ Please see Chapter. 2.2.2 | | ☐ Please see Chapter. 2.2.3 | |
| test site | ☒ 347 Radio.lab.1 | ☐ Radio.lab.2 | | | ☐ | ☐ |
| spectr. analys. | ☐ 584 FSU | ☐ 489 ESU 40 | ☐ 264 FSEK | ☐ 620 ESU 26 | ☐ | ☐ |
| signaling | ☐ 392 MT8820A | ☐ 436 CMU | ☒ 547 CMU | | | |
| DC power | ☐ 456 EA 3013A | ☐ 457 EA 3013A | ☐ 459 EA 2032-50 | ☐ 268 EA- 3050 | ☐ 494 AG6632A | ☐ 498 NGPE 40 |
| otherwise | ☒ 529 6dB divider | ☒ 530 10dB Att. | ☐ 431 Near field | | | |
| Climatic test chamber | ☒ 331 HC 4055 | | | | | |
| line voltage | ☐ 230 V 50 Hz via public mains | | ☐ 060 110 V/ 60 Hz via PAS 5000 | | | |

### 5.7.2. Requirements and limits

| | |
|---|---|
| **FCC** | §2.1055(a)(1) , §22.355 |
| **IC** | RSS-132, Issue 3: 5.3 |
| **Limit** | *"The frequency stability shall be sufficient to ensure that the fundamental emission stays within the authorized frequency block"* |

### 5.7.3. Test condition and test set-up

| | |
|---|---|
| Test system set-up | Please see chapter "Test system set-up for conducted measurements on antenna port"<br><br>In order to maintain the voltage constant over the time period of the tests, a dummy battery was connected to a laboratory power supply. The power supply voltage was controlled on the input of the power supply terminals of the EUT. |
| Measurement method | The RF Channel spacing is 200 kHz according W-CDMA-Spec, with a guard band. The aim of the EUT is to function under all extreme conditions within authorized sub-bands in regard to temperature and voltage variations. The frequency deviation was recorded with base station's build in capability. (CMU)<br><br>As the standard requires that the fundamental emissions stays within the authorized band, a limit of 0.1ppm is considered low enough to ensure this. |
| EUT settings | A call was established on highest power transmit conditions in RMC99 mode.<br><br>The measurements were made at the low, middle and high carrier frequencies of each of the supported operating band for frequency shifts due temperature range or middle channel for frequency shifts due voltage range.<br><br>Tests have been done in Rel99, 12.2 kbps RMC operating mode. |

#### 5.7.3.1. Frequency shift of carrier against a voltage range at constant nominal temperature of 20° Celsius

1.) determine the carrier frequency for the middle channel at room temperature and nominal voltage [20°C]
2.) The voltage was reduced in absolute Volt steps to 85% of Vmin declared. (this shall be specified by the manufacturer) Record the carrier frequency shift within 2 minutes after powering on the EUT, to prevent for self heating effects
3.) The voltage was increased in absolute Volt steps 115% of Vmax declared voltage. Record the carrier frequency shift within 2 minutes after powering on the EUT, to prevent for self heating effects

### 5.7.4. Measurement results FDD Band 5:

| Channel 4183 (=836.6MHz) | | | | |
|---|---|---|---|---|
| Voltage [V] | Nominal Frequency [MHz] | Maximum frequency error | | Verdict |
| | | [Hz] | [ppm] | Limit=0.1ppm |
| 3,825 | 836,6 | 5 | 0,006 | pass |
| 4,500 | | 5 | 0,006 | |
| 14,000 | | -5 | -0,006 | |
| 18,000 | | 6 | 0,007 | |
| 20,700 | | -8 | -0,010 | |

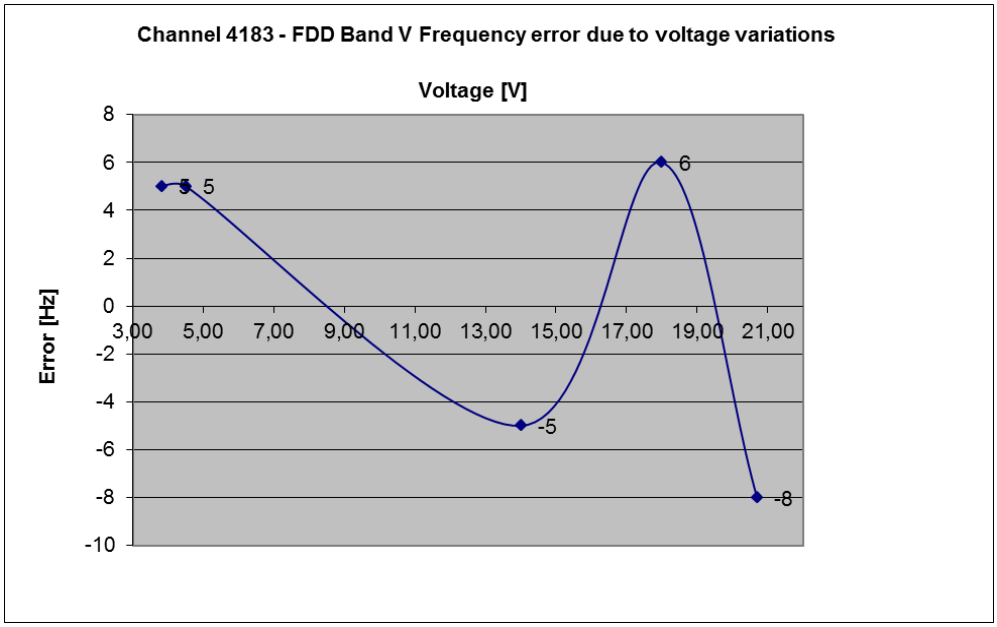

### 5.7.4.1. Frequency shift of carrier against temperature at constant power supply voltage

1.) determine the carrier frequency for the lowest, middle and highest channel at room temperature and nominal voltage [20°C]
2.) expose the mobile station to –30°C, wait sufficient time to have constant temperature.
3.) Perform the carrier frequencies measurements in 10°C increments from –30°C to +50°C. For about half hour at the specified temperature the mobile was powered-off. After powering-on, the measurements were made within 2 minute for the channel lower channel, in order to prevent self-warming of the mobile.

### 5.7.4.2. FDD Band 5

| Temperature | Maximum frequency error | | | | | | Verdict |
|---|---|---|---|---|---|---|---|
| | Channel 4132 | Channel 4183 | Channel 4233 | Channel 4132 | Channel 4183 | Channel 4233 | Limit=±0.1ppm |
| | [Hz] | | | [ppm] | | | |
| -30 | -7 | 5 | 7 | -0,008 | 0,006 | 0,008 | Pass |
| -20 | -6 | 5 | 8 | -0,007 | 0,006 | 0,009 | |
| -10 | -7 | 4 | 7 | -0,008 | 0,005 | 0,008 | |
| 0 | 8 | -6 | 8 | 0,010 | -0,007 | 0,009 | |
| 10 | 7 | 5 | 5 | 0,008 | 0,006 | 0,006 | |
| 20 | 6 | 6 | -7 | 0,007 | 0,007 | -0,008 | |
| 30 | 7 | -5 | -10 | 0,008 | -0,006 | -0,012 | |
| 40 | 8 | 5 | -8 | 0,010 | 0,006 | -0,009 | |
| 50 | 10 | -8 | -8 | 0,012 | -0,010 | -0,009 | |

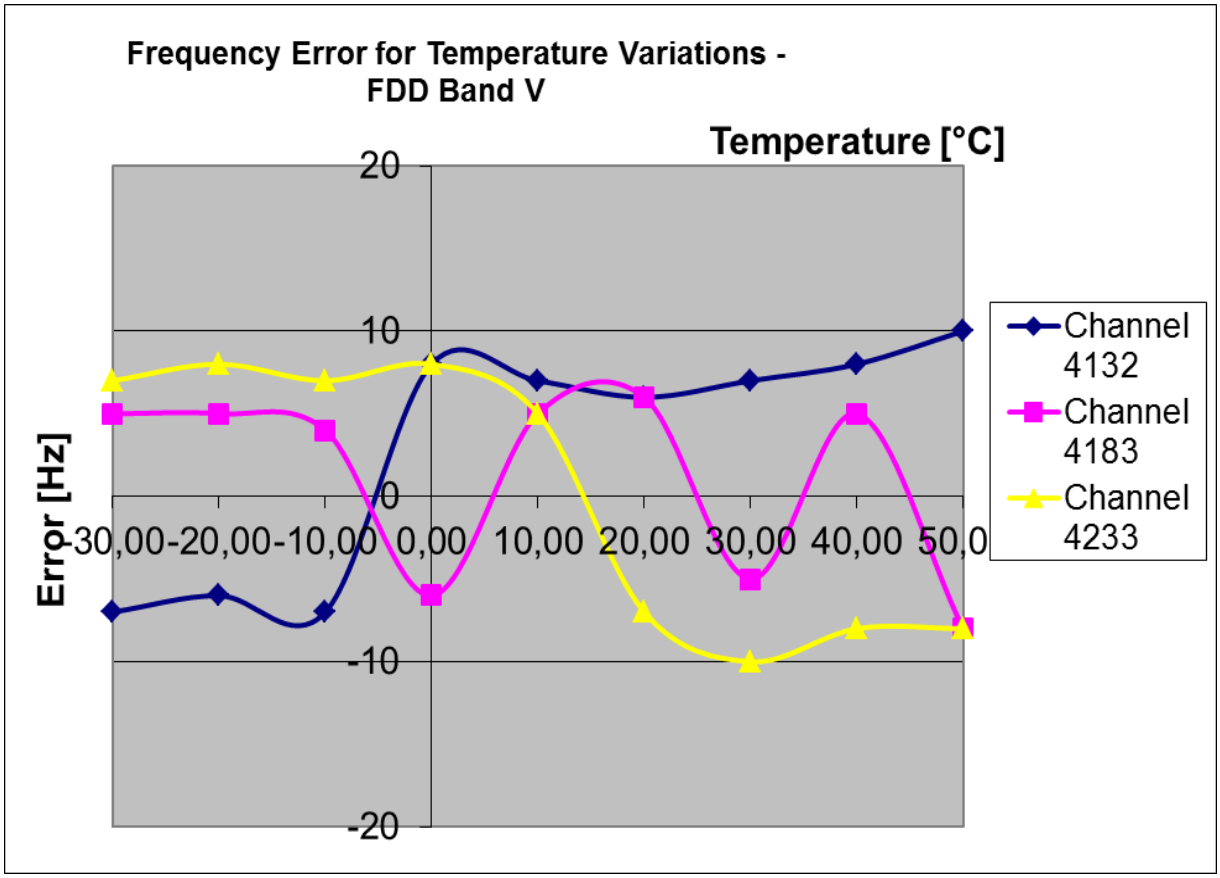

## 5.8. Measurement uncertainties

The reported uncertainties are calculated based on the standard uncertainty multiplied with the appropriate coverage factor **k**, such that a confidence level of approximately 95% is achieved.
For uncertainty determination, each component used in the concrete measurement set-up was taken in account and it's contribution to the overall uncertainty according it's statistical distribution calculated.

Following table shows expectable uncertainties for each measurement type performed.

| RF-Measurement | Frequency range | Calculated uncertainty based on a confidence level of 95% | Remarks: |
|---|---|---|---|
| Power Output conducted | 9 kHz .. 20 GHz | 1.0 dB | -- |
| Power Output radiated | 30 MHz .. 4 GHz | 3.17 dB | Substitution method |
| Conducted emissions on antenna ports | 9 kHz .. 20 GHz | 1.0 dB | -- |
| Radiated emissions enclosure | 150 kHz .. 30 MHz | 5.0 dB | Magnetic field |
| | 30 MHz .. 1 GHz | 4.2 dB | E-Field |
| | 1 GHz .. 20 GHz | 3.17 dB | Substitution method |
| Occupied bandwidth | 9 kHz .. 4 GHz | 0.1272 ppm (Delta Marker ) | Frequency error |
| | | 1.0 dB | Power |
| Emission bandwidth | 9 kHz .. 4 GHz | 0.1272 ppm (Delta Marker) | Frequency error |
| | | 1.0 dB | Power |
| Frequency stability | 9 kHz .. 20 GHz | 0.0636 ppm | -- |
| Conducted emissions on AC-mains port ($U_{CISPR}$) | 9 kHz .. 150 kHz | 4.0 dB | -- |
| | 150 kHz .. 30 MHz | 3.6 dB | |

**Table: measurement uncertainties, valid for conducted/radiated measurements**

# 6. Abbreviations used in this report

| The abbreviations | |
|---|---|
| ANSI | American National Standards Institute |
| AV , AVG, CAV | Average detector |
| EIRP | Equivalent isotropically radiated power, determined within a separate measurement |
| EGPRS | Enhanced General Packet Radio Service |
| EUT | Equipment Under Test |
| FCC | Federal Communications Commission, USA |
| IC | Industry Canada |
| n.a. | not applicable |
| Op-Mode | Operating mode of the equipment |
| PK | Peak |
| RBW | resolution bandwidth |
| RF | Radio frequency |
| RSS | Radio Standards Specification, Dokuments from Industry Canada |
| Rx | Receiver |
| TCH | Traffic channel |
| Tx | Transmitter |
| QP | Quasi peak detector |
| VBW | Video bandwidth |
| ERP | Effective radiated power |

# 7. Accreditation details of CETECOM's laboratories and test sites

| Ref.-No. | Accreditation Certificate | Valid for laboratory area or test site | Accreditation Body |
|---|---|---|---|
| - | D-PL-12047-01-01 | All laboratories and test sites of CETECOM GmbH, Essen | DAkkS, Deutsche Akkreditierungsstelle GmbH |
| 337<br>487<br>558<br>348<br>348 | 736496 | Radiated Measurements 30 MHz to 1 GHz, 3 m / 10 m (OATS)<br>Radiated Measurements 30 MHz to 1 GHz, 3 m (SAR)<br>Radiated Measurements above 1 GHz, 3 m (FAR)<br>Mains Ports Conducted Interference Measurements<br>Telecommunication Ports Conducted Interference Measurem. | FCC, Federal Communications Commission<br>Laboratory Division, USA<br>(MRA US-EU 0003) |
| 337<br>487<br>550<br>558 | 3462D-1<br>3462D-2<br>3462D-2<br>3462D-3 | Radiated Measurements 30 MHz to 1 GHz, 3 m / 10 m (OATS)<br>Radiated Measurements 30 MHz to 1 GHz, 3 m (SAR)<br>Radiated Measurements 1 GHz to 6 GHz, 3 m (SAR)<br>Radiated Measurements above 1 GHz, 3 m (FAR) | IC, Industry Canada Certification and Engineering Bureau |
| 487<br>550<br>348<br>348 | R-2666<br>G-301<br>C-2914<br>T-1967 | Radiated Measurements 30 MHz to 1 GHz, 3 m (SAR)<br>Radiated Measurements 1 GHz to 6 GHz, 3 m (SAR)<br>Mains Ports Conducted Interference Measurements<br>Telecommunication Ports Conducted Interference Measurem. | VCCI, Voluntary Control Council for Interference by Information Technology Equipment, Japan |
| OATS = Open Area Test Site, SAR = Semi Anechoic Room, FAR = Fully Anechoic Room | | | |

# 8. Instruments and Ancillary

## 8.1. Used equipment "CTC"

The "Ref.-No" in the left column of the following tables allows the clear identification of the laboratory equipment.

### 8.1.1. Test software and firmware of equipment

| Ref.-No. | Equipment | Type | Serial-No. | Version of Firmware or Software during the test |
|---|---|---|---|---|
| 001 | EMI Test Receiver | ESS | 825132/017 | Firm.= 1.21 , OTP=2.0, GRA=2.0 |
| 012 | Signal Generator (EMS-cond.) | SMY 01 | 839069/027 | Firm.= V 2.02 |
| 013 | Power Meter (EMS cond.) | NRVD | 839111/003 | Firm.= V 1.51 |
| 017 | Digital Radiocommunication Tester | CMD 60 M | 844365/014 | Firmware = V 3.52 .22.01.99, DECT = D2.87 13.01.99 |
| 053 | Audio Analyzer | UPA3 | 860612/022 | Firm. V 4.3 |
| 119 | RT Harmonics Analyzer dig. Flickermeter | B10 | G60547 | Firm.= V 3.1DHG |
| 140 | Signal Generator | SMHU | 831314/006 | Firm.= 3.21 |
| 261 | Thermal Power Sensor | NRV-Z55 | 825083/0008 | EPROM-Datum 02.12.04, SE EE 1 B |
| 262 | Power Meter | NRV-S | 825770/0010 | Firm.= 2.6 |
| 263 | Signal Generator | SMP 04 | 826190/0007 | Firm.=3.21 |
| 264 | Spectrum Analyzer | FSEK 30 | 826939/005 | Bios=2.1, Analyzer= 3.20 |
| 295 | Racal Digital Radio Test Set | 6103 | 1572 | UNIT Firmware= 4.04, SW-Main=4.04, SW-BBP=1.04, SW-DSP=1.02, Hardboot=1.02, Softboot=2.02 |
| 298 | Univ. Radio Communication Tester | CMU 200 | 832221/091 | R&S Test Firmware =3.53 /3.54 (current Testsoftw. f. all band used |
| 323 | Digital Radiocommunication Tester | CMD 55 | 825878/0034 | Firm.= 3.52 .22.01.99 |
| 331 | Climatic Test Chamber -40/+80 Grad | HC 4055 | 43146 | TSI 1.53 |
| 335 | CTC-EMS-Conducted | System EMS Conducted | - | EMC 32 V 8.52 |
| 340 | Digital Radiocommunication Tester | CMD 55 | 849709/037 | Firm.= 3.52 .22.01.99 |
| 355 | Power Meter | URV 5 | 891310/027 | Firm.= 1.31 |
| 365 | 10V Insertion Unit 50 Ohm | URV5-Z2 | 100880 | Eprom Data = 31.03.08 |
| 366 | Ultra Compact Simulator | UCS 500 M4 | V0531100594 | Firm. UCS 500=001925/3.06a02, rc=ISMIEC 4.10 |
| 371 | Bluetooth Tester | CBT32 | 100153 | CBT V5,30+ SW-Option K55, K57 |
| 377 | EMI Test Receiver | ESCS 30 | 100160 | Firm.= 2.30, OTP= 02.01, GRA= 02.36 |
| 378 | Broadband RF Field Monitor | RadiSense III | 03D00013SNO-08 | Firm.= V.03D13 |
| 383 | Signal Generator | SME 03 | 842 828 /034 | Firm.= 4.61 |
| 389 | Digital Multimeter | Keithley 2000 | 0583926 | Firm. = A13 (Mainboard) A02 (Display) |
| 392 | Radio Communication Tester | MT8820A | 6K00000788 | Firm.= 4.50 #005, IPL=4.01#001,OS=4.02#001, GSM=4.41#013, W-CDMA= 4.54#004, scenario= 4.52#002 |
| 436 | Univ. Radio Communication Tester | CMU 200 | 103083 | R&S Test Firmware Base=5.14, Mess-Software= GSM:5.14 WCDMA:5.14 (current Testsoftw. F. all band |
| 441 | CTC-SAR-EMI Cable Loss | System EMI field (SAR) | - | EMC 32 Version 8.52 |
| 442 | CTC-SAR-EMS | System EMS field (SAR) | - | EMC 32 Version 8.40 |
| 443 | CTC-FAR-EMI-RSE | System CTC-FAR-EMI-RSE | - | Spuri 7.2.5 or EMC 32 Ver. 8.53 |
| 444 | CTC-FAR-EMS field | System-EMS-Field (FAR) | - | EMC 32 Version 8.40 |
| 460 | Univ. Radio Communication Tester | CMU 200 | 108901 | R&S Test Firmware Base=5.14, GSM=5.14 WCDMA=5.14 (current Testsoftw.,f. all band to be used, |
| 489 | EMI Test Receiver | ESU40 | 1000-30 | Firmware=4.43 SP3, Bios=V5.1-16-3, Spec. =01.00 |
| 491 | ESD Simulator dito | ESD dito | dito307022 | V 2.30 |
| 524 | Voltage Drop Simulator | VDS 200 | 0196-16 | Software Nr: 000037 Version V4.20a01 |
| 526 | Burst Generator | EFT 200 A | 0496-06 | Software Nr. 000034 Version V2.32 |
| 527 | Micro Pulse Generator | MPG 200 B | 0496-05 | Software-Nr. 000030 Version V2.43 |
| 528 | Load Dump Simulator | LD 200B | 0496-06 | Software-Nr. 000031 Version V2.35a01 |
| 546 | Univ. Radio Communication Tester | CMU 200 | 106436 | R&S Test Firmware Base=5.14, GSM=5.14 WCDMA=5.14 (current Testsoftw.,f. all band to be used |
| 547 | Univ. Radio Communication Tester | CMU 200 | 835390/014 | R&S Test Firmware Base=V5.1403 (current Testsoftw., f. all band used, GSM = 5.14 WCDMA: = 5.14 |
| 584 | Spectrum Analyzer | FSU 8 | 100248 | 2.82_SP3 |
| 597 | Univ. Radio Communication Tester | CMU 200 | 100347 | R&S Test Firmware Base=5.01, GSM=5.02 WCDMA= not installed, Mainboard= µP1=V.850 |
| 598 | Spectrum Analyzer | FSEM 30 (Reserve) | 831259/013 | Firmware Bios 3.40 , Analyzer 3.40 Sp 2 |
| 620 | EMI Test Receiver | ESU 26 | 100362 | 4.43_SP3 |
| 642 | Wideband Radio Communication Tester | CMW 500 | 126089 | Setup V03.26, Test programm component V03.02.20 |
| 692 | Bluetooth Tester | CBT 32 | 100236 | CBT V 5.40, FW: V.2.41 (FPGA Digital, V. 3.09 FPGA RF) |
| | | | | |

## 8.1.2. Single instruments and test systems

| Ref.-No. | Equipment | Type | Serial-No. | Manufacturer | Interval of calibration | Remark | Cal due |
|---|---|---|---|---|---|---|---|
| 001 | EMI Test Receiver | ESS | 825132/017 | Rohde & Schwarz | 12 M | - | 31.03.2015 |
| 005 | AC - LISN (50 Ohm/50µH, test site 1) | ESH2-Z5 | 861741/005 | Rohde & Schwarz | 12 M | - | 31.03.2015 |
| 007 | Single-Line V-Network (50 Ohm/5µH) | ESH3-Z6 | 892563/002 | Rohde & Schwarz | 12 M | - | 31.03.2015 |
| 009 | Power Meter (EMS-radiated) | NRV | 863056/017 | Rohde & Schwarz | 24 M | - | 31.03.2015 |
| 016 | Line Impedance Simulating Network | Op. 24-D | B6366 | Spitzenberger+Spies | 36 M | - | 31.03.2016 |
| 020 | Horn Antenna 18 GHz (Subst 1) | 3115 | 9107-3699 | EMCO | 36/12 M | - | 31.03.2017 |
| 021 | Loop Antenna (H-Field) | 6502 | 9206-2770 | EMCO | 36 M | - | 31.03.2015 |
| 030 | Loop Antenna (H-field) | HFH-Z2 | 879604/026 | Rohde & Schwarz | 36 M | - | 31.03.2015 |
| 033 | RF-current probe (100kHz-30MHz) | ESH2-Z1 | 879581/18 | Rohde & Schwarz | 24 M | - | 31.03.2015 |
| 057 | relay-switch-unit (EMS system) | RSU | 494440/002 | Rohde & Schwarz | pre-m | 1a | |
| 060 | power amplifier (DC-2kHz) | PAS 5000 | B6363 | Spitzenberger+Spies | - | 3 | |
| 066 | notch filter (WCDMA; FDD1) | WRCT 1900/2200-5/40-10EEK | 5 | Wainwright GmbH | 12 M | 1g | 30.06.2015 |
| 086 | DC - power supply, 0 -10 A | LNG 50-10 | - | Heinzinger Electronic | pre-m | 2 | |
| 087 | DC - power supply, 0 -5 A | EA-3013 S | - | Elektro Automatik | pre-m | 2 | |
| 090 | Helmholtz coil: 2x10 coils in series | Helmholtz coil: 2x10 coils in | - | RWTÜV | 12 M | 4 | 31.03.2015 |
| 091 | USB-LWL-Converter | OLS-1 | 007/2006 | Ing. Büro Scheiba | - | 4 | |
| 099 | passive voltage probe | ESH2-Z3 | 299.7810.52 | Rohde & Schwarz | 36 M | - | 31.03.2015 |
| 100 | passive voltage probe | Probe TK 9416 | without | Schwarzbeck | 36 M | - | 31.03.2015 |
| 110 | USB-LWL-Converter | OLS-1 | - | Ing. Büro Scheiba | - | 4 | |
| 119 | RT Harmonics Analyzer dig. Flickermeter | B10 | G60547 | BOCONSULT | 36 M | - | 31.03.2016 |
| 136 | adjustable dipole antenna (Dipole 1) | 3121C-DB4 | 9105-0697 | EMCO | 36 M | - | 31.03.2015 |
| 140 | Signal Generator | SMHU | 831314/006 | Rohde & Schwarz | 24 M | - | 31.03.2016 |
| 248 | attenuator | SMA 6dB 2W | - | Radiall | pre-m | 2 | |
| 249 | attenuator | SMA 10dB 10W | - | Radiall | pre-m | 2 | |
| 252 | attenuator | N 6dB 12W | - | Radiall | pre-m | 2 | |
| 256 | attenuator | SMA 3dB 2W | - | Radiall | pre-m | 2 | |
| 257 | hybrid | 4031C | 04491 | Narda | pre-m | 2 | |
| 260 | hybrid coupler | 4032C | 11342 | Narda | pre-m | 2 | |
| 261 | Thermal Power Sensor | NRV-Z55 | 825083/0008 | Rohde & Schwarz | 24 M | - | 31.03.2016 |
| 262 | Power Meter | NRV-S | 825770/0010 | Rohde & Schwarz | 24 M | - | 31.03.2016 |
| 263 | Signal Generator | SMP 04 | 826190/0007 | Rohde & Schwarz | 36 M | - | 31.03.2016 |
| 264 | Spectrum Analyzer | FSEK 30 | 826939/005 | Rohde & Schwarz | 12 M | - | 31.03.2015 |
| 265 | peak power sensor | NRV-Z33, Model 04 | 840414/009 | Rohde & Schwarz | 24 M | - | 31.03.2016 |
| 266 | Peak Power Sensor | NRV-Z31, Model 04 | 843383/016 | Rohde & Schwarz | 24 M | - | 31.03.2016 |
| 267 | notch filter GSM 850 | WRCA 800/960-6EEK | 9 | Wainwright GmbH | pre-m | 2 | |
| 270 | termination | 1418 N | BB6935 | Weinschel | pre-m | 2 | |
| 271 | termination | 1418 N | BE6384 | Weinschel | pre-m | 2 | |
| 272 | attenuator (20 dB) 50 W | Model 47 | BF6239 | Weinschel | pre-m | 2 | |
| 273 | attenuator (10 dB) 100 W | Model 48 | BF9229 | Weinschel | pre-m | 2 | |
| 274 | attenuator (10 dB) 50 W | Model 47 (10 dB) 50 W | BG0321 | Weinschel | pre-m | 2 | |
| 275 | DC-Block | Model 7003 (N) | C5129 | Weinschel | pre-m | 2 | |
| 276 | DC-Block | Model 7006 (SMA) | C7061 | Weinschel | pre-m | 2 | |
| 279 | power divider | 1515 (SMA) | LH855 | Weinschel | pre-m | 2 | |
| 287 | pre-amplifier 25MHz - 4GHz | AMF-2D-100M4G-35-10P | 379418 | Miteq | 12 M | 1c | 30.06.2015 |
| 291 | high pass filter GSM 850/900 | WHJ 2200-4EE | 14 | Wainwright GmbH | 12 M | 1c | 30.06.2015 |
| 298 | Univ. Radio Communication Tester | CMU 200 | 832221/091 | Rohde & Schwarz | pre-m | 3 | |
| 300 | AC LISN (50 Ohm/50µH, 1-phase) | ESH3-Z5 | 892 239/020 | Rohde & Schwarz | 12 M | - | 31.03.2015 |
| 301 | attenuator (20 dB) 50W, 18GHz | 47-20-33 | AW0272 | Lucas Weinschel | pre-m | 2 | |
| 302 | horn antenna 40 GHz (Meas 1) | BBHA9170 | 155 | Schwarzbeck | 36 M | - | 31.03.2017 |
| 303 | horn antenna 40 GHz (Subst 1) | BBHA9170 | 156 | Schwarzbeck | 36 M | - | 31.03.2017 |
| 331 | Climatic Test Chamber -40/+80 Grad | HC 4055 | 43146 | Heraeus Vötsch | 24 M | - | 30.11.2014 |
| 341 | Digital Multimeter | Fluke 112 | 81650455 | Fluke | 24 M | - | 31.03.2016 |
| 342 | Digital Multimeter | Voltcraft M-4660A | IB 255466 | Voltcraft | 24 M | - | 31.03.2015 |
| 347 | laboratory site | radio lab. | - | - | - | 5 | |
| 348 | laboratory site | EMI conducted | - | - | - | 5 | |
| 354 | DC - Power Supply 40A | NGPE 40/40 | 448 | Rohde & Schwarz | pre-m | 2 | |
| 355 | Power Meter | URV 5 | 891310/027 | Rohde & Schwarz | 24 M | - | 31.03.2016 |
| 356 | power sensor | NRV-Z1 | 882322/014 | Rohde & Schwarz | 24 M | - | 31.03.2015 |
| 357 | power sensor | NRV-Z1 | 861761/002 | Rohde & Schwarz | 24 M | - | 31.03.2015 |
| 371 | Bluetooth Tester | CBT32 | 100153 | R&S | 24 M | - | 31.03.2016 |
| 373 | Single-Line V-Network (50 Ohm/5µH) | ESH3-Z6 | 100535 | Rohde & Schwarz | 24 M | - | 31.03.2016 |
| 376 | Horn Antenna 6 GHz | BBHA9120 E | BBHA 9120 E 179 | Schwarzbeck | 12 M | - | 31.03.2015 |
| 377 | EMI Test Receiver | ESCS 30 | 100160 | Rohde & Schwarz | 12 M | - | 31.03.2015 |
| 389 | Digital Multimeter | Keithley 2000 | 0583926 | Keithley | 24 M | - | 31.03.2015 |
| 392 | Radio Communication Tester | MT8820A | 6K00000788 | Anritsu | 12 M | - | 31.03.2015 |
| 431 | Model 7405 | Near-Field Probe Set | 9305-2457 | EMCO | - | 4 | |
| 436 | Univ. Radio Communication Tester | CMU 200 | 103083 | Rohde & Schwarz | 12 M | - | 31.03.2015 |
| 439 | UltraLog-Antenna | HL 562 | 100248 | Rohde & Schwarz | 36 M | - | 31.03.2017 |
| 441 | CTC-SAR-EMI Cable Loss | System EMI field (SAR) Cable | - | CETECOM | 12 M | 5 | 31.10.2015 |

| Ref.-No. | Equipment | Type | Serial-No. | Manufacturer | Interval of calibration | Remark | Cal due |
|---|---|---|---|---|---|---|---|
| 443 | CTC-FAR-EMI-RSE | System CTC-FAR-EMI-RSE | - | ETS-Lindgren / CETECOM | 12 M | 5 | 15.07.2015 |
| 448 | notch filter WCDMA_FDD II | WRCT 1850.0/2170.0-5/40- | 5 | Wainwright Instruments GmbH | 12 M | 1c | 30.06.2015 |
| 449 | notch filter WCDMA FDD V | WRCT 824.0/894.0-5/40-8SSK | 1 | Wainwright | 12 M | 1c | 30.06.2015 |
| 454 | Oscilloscope | HM 205-3 | 9210 P 29661 | Hameg | - | 4 | |
| 456 | DC-Power supply 0-5 A | EA 3013 S | 207810 | Elektro Automatik | pre-m | 2 | |
| 459 | DC -Power supply 0-5 A , 0-32 V | EA-PS 2032-50 | 910722 | Elektro Automatik | pre-m | 2 | |
| 460 | Univ. Radio Communication Tester | CMU 200 | 108901 | Rohde & Schwarz | 12 M | - | 31.03.2015 |
| 463 | Universal source | HP3245A | 2831A03472 | Agilent | - | 4 | |
| 466 | Digital Multimeter | Fluke 112 | 89210157 | Fluke USA | 24 M | - | 31.03.2016 |
| 467 | Digital Multimeter | Fluke 112 | 89680306 | Fluke USA | 36 M | - | 31.03.2015 |
| 468 | Digital Multimeter | Fluke 112 | 90090455 | Fluke USA | 36 M | - | 31.03.2015 |
| 477 | ReRadiating GPS-System | AS-47 | - | Automotive Cons. Fink | - | 3 | |
| 480 | power meter (Fula) | NRVS | 838392/031 | Rohde & Schwarz | 24 M | - | 31.03.2015 |
| 482 | filter matrix | Filter matrix SAR 1 | - | CETECOM (Brl) | - | 1d | |
| 484 | pre-amplifier 2,5 - 18 GHz | AMF-5D-02501800-25-10P | 1244554 | Miteq | 12 M | - | 30.06.2015 |
| 487 | System CTC NSA-Verification SAR-EMI | System EMI field (SAR) NSA | - | ETS Lindgren / CETECOM | 24 M | - | 30.06.2015 |
| 489 | EMI Test Receiver | ESU40 | 1000-30 | Rohde & Schwarz | 12 M | - | 31.03.2015 |
| 502 | band reject filter | WRCG 1709/1786-1699/1796- | SN 9 | Wainwright | pre-m | 2 | |
| 503 | band reject filter | WRCG 824/849-814/859- | SN 5 | Wainwright | pre-m | 2 | |
| 512 | notch filter GSM 850 | WRCA 800/960-02/40-6EEK | SN 24 | Wainwrght | 12 M | 1c | 30.06.2015 |
| 517 | relais switch matrix | HF Relais Box Keithley | SE 04 | Keithley | pre-m | 2 | |
| 523 | Digital Multimeter | L4411A | MY46000154 | Agilent | 24 M | - | 31.03.2015 |
| 529 | 6 dB Broadband resistive power divider | Model 1515 | LH 855 | Weinschel | pre-m | 2 | |
| 530 | 10 dB Broadband resistive power divider | R 416110000 | LOT 9828 | - | pre-m | 2 | |
| 546 | Univ. Radio Communication Tester | CMU 200 | 106436 | R&S | 12 M | - | 12.02.2015 |
| 547 | Univ. Radio Communication Tester | CMU 200 | 835390/014 | Rohde & Schwarz | 12 M | - | 31.03.2015 |
| 548 | Digital-Barometer | GBP 2300 | without | Greisinger GmbH | 36 M | - | 30.06.2015 |
| 549 | Log.Per-Antenna | HL025 | 1000060 | Rohde & Schwarz | 36/12 M | - | 31.03.2015 |
| 552 | high pass filter 2,8-18GHz | WHKX 2.8/18G-10SS | 4 | Wainwright | 12 M | 1c | 30.06.2015 |
| 558 | System CTC FAR S-VSWR | System CTC FAR S-VSWR | - | CTC | 24 M | - | 31.07.2015 |
| 574 | Biconilog Hybrid Antenna | BTA-L | 980026L | Frankonia | 36/12 M | - | 31.03.2016 |
| 584 | Spectrum Analyzer | FSU 8 | 100248 | Rohde & Schwarz | pre-m | - | |
| 594 | Wideband Radio Communication Tester | CMW 500 | 101757 | Rohde & Schwarz | 12 M | - | 31.03.2015 |
| 597 | Univ. Radio Communication Tester | CMU 200 | 100347 | Rohde & Schwarz | 36 M | - | 31.03.2016 |
| 598 | Spectrum Analyzer | FSEM 30 (Reserve) | 831259/013 | Rohde & Schwarz | 24 M | - | 13.01.2015 |
| 600 | power meter | NRVD (Reserve) | 834501/018 | Rohde & Schwarz | 24 M | - | 31.03.2015 |
| 601 | medium-sensitivity diode sensor | NRV-Z5 (Reserve) | 8435323/003 | Rohde & Schwarz | 24 M | - | 31.03.2015 |
| 602 | peak power sensor | NRV-Z32 (Reserve) | 835080 | Rohde & Schwarz | 24 M | - | 31.03.2015 |
| 611 | DC power supply | E3632A | KR 75305854 | Agilent | pre-m | 2 | |
| 612 | DC power supply | E3632A | MY 40001321 | Agilent | pre-m | 2 | |
| 613 | Attenuator | R416120000 20dB 10W | Lot. 9828 | Radiall | pre-m | 2 | |
| 616 | Digitalmultimeter | Fluke 177 | 88900339 | Fluke | 24 M | - | 31.03.2016 |
| 617 | Power Splitter/Combiner | ZFSC-2-2-S+ | S F987001108 | Mini Circuits | - | 2 | |
| 618 | Power Splitter/Combiner | 50PD-634 | 600994 | JFW Industries USA | - | 2 | |
| 619 | Power Splitter/Combiner | 50PD-634 | 600995 | JFW Industries, USA | - | 3 | |
| 620 | EMI Test Receiver | ESU 26 | 100362 | Rohde-Schwarz | 12 M | - | 31.03.2015 |
| 621 | Step Attenuator 0-139 dB | RSP | 100017 | Rohde & Schwarz | pre-m | 2 | |
| 625 | Generic Test Load USB | Generic Test Load USB | - | CETECOM | - | 2 | |
| 634 | Spectrum Analyzer | FSM (HF-Unit) | 826188/010 | Rohde & Schwarz | pre-m | 2 | |
| 637 | High Speed HDMI with Ethernet 1m | HDMI cable with Ethernet 1m | - | KogiLink | - | 2 | |
| 638 | HDMI Kabel with Ethernet 1,5 m flach | HDMI cable with Ethernet | - | Reichelt | - | 2 | |
| 640 | HDMI cable 2m rund | HDMI cable 2m rund | - | Reichelt | - | 2 | |
| 641 | HDMI cable with Ethernet | Certified HDMI cable with | - | PureLink | - | 2 | |
| 642 | Wideband Radio Communication Tester | CMW 500 | 126089 | Rohde&Schwarz | 12 M | - | 31.03.2015 |
| 644 | Amplifierer | ZX60-2534M+ | SN865701299 | Mini-Circuits | - | - | |
| 670 | Univ. Radio Communication Tester | CMU 200 | 106833 | Rohde & Schwarz | 12 M | - | 31.03.2015 |
| 671 | DC-power supply 0-5 A | EA-3013S | - | Elektro Automatik | pre-m | 2 | |
| 678 | Power Meter | NRP | 101638 | Rohde&Schwarz | pre-m | - | |
| 683 | Spectrum Analyzer | FSU 26 | 200571 | Rohde & Schwarz | 12 M | - | 26.11.2014 |
| 686 | Field Analyzer | EHP-200A | 160WX30702 | Narda Safety Test Solutions | 24 M | - | 18.07.2015 |
| 687 | Signal Generator | SMF 100A | 102073 | Rohde&Schwarz | 12 M | - | 27.11.2014 |
| 688 | Pre Amp | JS-18004000-40-8P | 1750117 | Miteq | pre-m | - | |
| 692 | Bluetooth Tester | CBT 32 | 100236 | Rohde & Schwarz | 12 M | - | 31.03.2015 |
| 693 | TS8997 | CTC-Radio Lab 1_TS8997 | - | Rohde&Schwarz | 12 M | 5 | 30.11.2014 |

### 8.1.3. Legend

| | | |
|---|---|---|
| Note / remarks | | Calibrated during system calibration: |
| | 1a | System CTC-SAR-EMS (Ref.-No. 442) |
| | 1b | System-CTC-EMS-Conducted (Ref.-No. 335) |
| | 1c | System CTC-FAR-EMI-RSE (Ref.-No . 443) |
| | 1d | System CTC-SAR-EMI (Ref.-No . 441) |
| | 1e | System CTC-OATS (EMI radiated) (Ref.-No. 337) |
| | 1 f | System CTC-CTIA-OTA (Ref.-No . 420) |
| | 1 g | System CTC-FAR-EMS (Ref.-No . 444) |
| | 2 | Calibration or equipment check immediately before measurement |
| | 3 | Regulatory maintained equipment for functional check or support purpose |
| | 4 | Ancillary equipment without calibration e.g. mechanical equipment or monitoring equipment |
| | 5 | Test System |

| | | |
|---|---|---|
| Interval of calibration | 12 M | 12 month |
| | 24 M | 24 month |
| | 36 M | 36 month |
| | 24/12 M | Calibration every 24 months, between this every 12 months internal validation |
| | 36/12 M | Calibration every 36 months, between this every 12 months internal validation |
| | Pre-m | Check before starting the measurement |
| | - | Without calibration |

# 9. Versions of test reports (change history)

| Name of report | Date | Author | Remarks: |
|---|---|---|---|
| TR6-0491-14-1-23b | 2014-09-11 | Lor | First version |
| -- | -- | -- | |