MARINE DATA SYSTEMS

Innovation for Life

# AIMS MIV

***AIS 1371-1 Technology***

## TECHNICAL USER MANUAL

**Revision 01**

# IMPORTANT WARNINGS

**DANGER: HIGH VOLTAGE!**

**RISK OF ELECTRICAL SHOCK!**

**This unit has a high voltage source inside.**
**Disconnect from the power before opening.**
**DO NOT remove the covers while the unit is switched on.**
**5 Volt electrical power on GPS and DBR (when fitted) antenna ports.**

## NOTICE

**Compass safe distance is 1 meter.**

## NOTICE

**No user serviceable parts inside, servicing only by properly qualified and certified technical staff.**

## NOTICE

**The GPS module uses a back-up battery to ensure quick start-up of the GPS unit. This battery must be replaced every 5 years.**

## NOTICE

This manual is for informational use only, and may be changed without notice. This manual should not be construed as a commitment of Marine Data Systems. Under no circumstances does Marine Data Systems assume any responsibility or liability for any errors or inaccuracies that may appear in this document. The equipment should only be used for the purposes intended by the manufacturer; any deviation from this will void the warranty of the product.

Document No. 1101-0010-AA-00-TM

Issue: 10

© Marine Data Systems (Pty.) Ltd.

## TABLE OF CONTENTS


1. INTRODUCTION ..... 7
1.1. Automatic Identification System (AIS) Overview ..... 7
1.2. AIS Unit Overview ..... 7
1.2.1. Data Interfaces ..... 7
1.2.2. RF Interfaces ..... 8
1.2.3. Technical data ..... 8
1.2.4. Dimensions And Weights ..... 8
1.2.5. Receiver Default Frequencies ..... 9
1.2.6. AIS Receivers ..... 9
1.2.7. AIS Transmitter ..... 9
1.2.8. DSC Receiver ..... 9
1.2.9. Alarm Relay ..... 10
1.2.10. Compass Safe Distance ..... 10
1.2.11. Navigation Specifications (Internal Sensors) ..... 10
1.2.12. Listener and Talker Specifications ..... 11
2. INSTALLATION ..... 13
2.1. Unpacking the Unit ..... 13
2.2. Mounting the Unit ..... 13
2.3. External Interfaces ..... 15
2.4. Grounding the AIS unit ..... 16
2.5. AIS VHF Antenna installation ..... 17
2.5.1 Alternative VHF antenna installation options ..... 18
2.5.1.1. Option 1 ..... 18
2.5.1.2. Option 2 ..... 19
2.5.2. Minimising Interference: Additional Guidelines ..... 19
2.6. AIS GPS Antenna Installation ..... 19
2.7. Cable and Plug Connection Specifications ..... 20
2.7.1. RF Cables ..... 20
2.7.1.1. GPS Antenna (Cable type E) ..... 20
2.7.1.2. VHF Antenna (Cable type F) ..... 21
2.7.1.3. DBR Antenna (Cable Type L) ..... 21
2.7.2. Data Interface Connections ..... 21
2.7.2.1. Presentation Interface ..... 21
2.7.2.2. Pilot Port ..... 23
2.7.2.3. KDU (Keyboard Display Unit) ..... 23
2.7.2.4. Long-Range Communication Port (L/RANGE I/O) ..... 24
2.7.2.5. Sensor Input Ports (SENS 1, SENS 2, SENS 3) ..... 24
2.7.2.6. DGNSS Port ..... 25
2.7.2.7. Service Port ..... 26
2.7.3. Power Supply Input ..... 27
2.7.4. Alarm Relay Connection ..... 27
2.7.5. Cable Assemblies ..... 28
2.7.5.1. Cable Types A, B, C, D ..... 28
2.7.5.2. Cable Type G Assembly – Power cable ..... 29

2.7.5.3. Cable Type H Assembly – Alarm cable ..... 29
2.7.5.4. Cable Type J Assembly ..... 30
2.7.5.5. Cable Type E, F and L Assembly ..... 31
2.8. Installation Check ..... 32
**3. TECHNICAL DESCRIPTION ..... 33**
3.1. AIS unit Overview ..... 33
3.2. System Modes of Operation ..... 34
3.2.1. Mobile Station ..... 34
3.3. Serial Communications ..... 34
3.3.1. Presentation, Pilot and KDU ports ..... 34
3.3.2. Sensor ports (input sentences only) ..... 38
3.3.2.1. Position and Time: ..... 38
3.3.2.2. Speed over ground: ..... 39
3.3.2.3. Course over ground: ..... 40
3.3.2.4. Heading: ..... 40
3.3.2.5. RAIM indicator: ..... 40
3.3.2.6. Rate of turn: ..... 40
3.3.3. Service port ..... 41
3.3.4. Long Range port ..... 41
3.4. Alarm messages ..... 41
3.5. Status messages ..... 44
3.6. AIS Receiver Module (RCM 1 or 2) ..... 44
3.7. Usage of NMEA sentences ..... 44
**4. SERVICE ..... 49**
4.1. Explanation of the LEDs ..... 49
4.2. System Indicators (additional information) ..... 50
4.2.1. DIFF. FIX ..... 50
4.2.2. Receiver failure ..... 50
4.3. Alarm relay ..... 50
4.4. Troubleshooting ..... 50
4.5. Security log retreival ..... 50
4.6. Replacing the Modules ..... 52
**5. APPENDICES ..... 54**
5.1. Abbreviations ..... 54
5.2. Reference Documents ..... 56
5.2.1. List of standards and specifications: ..... 56
5.2.2. List of Related Software and Manuals: ..... 57
5.3. AIMS Serial interface “Listener” and “Talker” circuit diagrams ..... 58

**LIST OF FIGURES**

Figure 1: AIS Unit Dimensions ..... 14

Figure 2: Mounting the AIS Unit ..... 14
Figure 3: External Interface Block Diagram ..... 15
Figure 4: External Interfaces on the rear panel of the AIS unit ..... 15
Figure 5: Grounding the AIS unit ..... 17
Figure 6: AIS Antenna and Ship's VHF Placement ..... 18
Figure 7: Alternative AIS Antenna and Ship's VHF Placement ..... 19
Figure 8: Data Cable Terminations (AIS unit Side) ..... 28
Figure 9: Cable Type G Assembly (AIS unit Side) ..... 29
Figure 10: Cable Type H Assembly (AIS unit Side) ..... 29
Figure 11: Cable Type J Assembly ..... 30
Figure 12: Cable type E, F and L Assembly ..... 31
Figure 13: AIS unit Block Schematic ..... 33
Figure 14: Ship dimensions and related fields ..... 38
Figure 15: AIS unit Module Layout (bottom view) ..... 52
Figure 16: AIS unit Module Layout (top view) ..... 52
Figure 17. RS422 General "Listener" circuit diagram ..... 58
Figure 18. RS422 General "Talker" circuit diagram ..... 58

**LIST OF TABLES**

Table 1: Presentation Interface Messages ..... 36
Table 2: Vessel and Cargo type ..... 37
Table 3: Position Sensor Precedence ..... 39
Table 4: Rate of Turn Sensor Precedence ..... 40
Table 5: AIS Standard alarm messages ..... 42
Table 6: Proprietary alarm definitions ..... 43
Table 7: Proprietary status messages ..... 44
Table 8 : NMEA message usage ..... 48
Table 9: LED Operation ..... 49

***Marine Data Systems*** would like to take this opportunity to congratulate you on the purchase of your AIS unit. We want to assure you that this product is manufactured from only the highest quality components and thoroughly tested to ensure your complete satisfaction.

If you have any questions, or queries related to this product, please do not hesitate to contact us:

**Physical Address:**
580 Kyalami Boulevard
Kyalami Business Park
Kyalami
Midrand
South Africa

**Postal Address:**
PostNet Suite #4
Private Bag X11
Halfway House
1685
South Africa

**Email:** support@marinedata.co.za

**Website:**
www.marinedata.co.za

**Telephone:**
+27 11 549 1800

**Fax:**
+27 11 549 1867

Thanking you,

***THE MDS TEAM***

# 1. INTRODUCTION

## *1.1. Automatic Identification System (AIS) Overview*

AIS is a radio data system where two or more stations operate on one or more radio channels using Time Division Multiple Access (TDMA). These units can be mobile, base or repeater stations. Mobile stations are installed onboard vessels and integrated to the vessel's sensors and display systems. Base stations, on the other hand, are installed on the shore side and allow remote monitoring of vessel traffic within the VHF coverage area of the base station. Base stations can be interconnected via an AIS Network to cover a larger area. Repeater stations can be used to extend the required coverage area, preferably where the traffic load is low and there is a lack of suitable communications infrastructure.

The main objective of the system is to assist in safer navigation; that is, sharing ship-to-ship, positional information, speed over ground, course over ground, heading, rate of turn, static and voyage information, as well as safety-related messages.

The Automatic Identification System (AIS Class A) is defined by the IMO and has been made a carriage requirement by the latest revision of SOLAS Chapter V. This does not only require the AIS to be installed, but also to provide information used for ship navigation.

The AIS has been standardised by the ITU and IEC and is subject to type approval. In order to fulfil the reliability requirements of information exchange, care **must** be taken to ensure the AIS unit is correctly installed.

## *1.2. AIS Unit Overview*

The AIS Unit operates in the VHF Maritime Mobile Band and, according to its programmed mode, operates:

- Ship to ship,
- Ship to shore,
- Shore to ship.

The AIS Unit operates autonomously with minimum user intervention and has a built-in display that monitors system health and activity. It is made up of a set of easily removable modules that can be replaced without any system adjustment or calibration.

It also incorporates those features of Digital Selective Calling (DSC) required by the AIS specifications. This means that the AIS Unit transmits and receives specified AIS related DSC messages on the maritime VHF DSC channel 70.

### 1.2.1. Data Interfaces

The AIS Unit is equipped with external interfaces that allow connection to:

- Keyboard Display Unit (KDU)
- Pilot's Display Unit (PDU)
- 3 Ship's Sensors Inputs (Typically Gyro, GPS and ROT Sensor)
- Ship's ARPA Radar

- Ship's ECDIS/ECS
- Other NMEA-compliant ship's navigation equipment

Displaying of incoming messages requires the connection of an external terminal to at least one of the specified interfaces, such as a Keyboard Display Unit.

### 1.2.2. RF Interfaces

The AIS Unit has three RF interfaces:

- VHF Antenna
- GPS Antenna
- Differential Beacon Receiver Antenna (DBR port) for optional internal DBR

### 1.2.3. Technical data

| | |
|---|---|
| Classification | Class A shipborne equipment of the Universal Automatic Identification system (AIS). Complies with recommendation ITU.R M.1371-1, IEC 61993-2, IEC 61162-2, IEC 60945 and IMO resolution MSC.74 (69) Annex 3. |
| AIS Unit Presentation Interface | According to Specification IEC 61993-2, IEC 61162-1, IEC 61162-2*. |
| RS422 interface | 2 pair cable (shielded) up to 100m carrying TX/RX data |
| | **Or** |
| RS232 interface | Multi-conductor cable (shielded) up to 15m carrying TX/RX data. |
| Services | • GPS Position reporting<br>• Short message services.<br>• BIT display.<br>• AIS related DSC |
| AIS Modulation | TX/RX 9.6kbits/s GMSK |
| AIS Coding | HDLC with bit stuffing |
| Supply Voltage | 24VDC (+30% to -10%) |
| Supply | Switched mode with Galvanic Isolation |
| Power consumption | Maximum 4A at 24VDC in transmit; Nominal 2A at 24V |
| Operating Temperature range | -15 to +55°C. |
| Heat Dissipation | 100W (during transmit) |
| Power Fuse | 6.3A |

* The AIS unit is compliant with IEC 61162-1 and available in IEC 61162-2 on the physical level at customer request for early versions of this product. Later versions of the product are IEC 61162-2 compliant by default.

**NOTE:** The input power to the AIS unit has reverse and over-voltage protection. If the polarity of the input power is incorrect, the unit will not switch on. Correct the polarity to restore operation. If the voltage to the AIS unit goes over 32V to 35V, the unit will protect it by blowing the fuse on the rear panel of the unit. Correct the voltage and replace the fuse to restore operation.

### 1.2.4. Dimensions And Weights

| | |
|---|---|
| Width | 445mm |
| Height | 80mm |
| Depth | 360mm |
| Weight | 8.5kg |

### 1.2.5. Receiver Default Frequencies

| Designation | Channel | Frequency (MHz) |
|---|---|---|
| AIS1 | 87B | 161.975 |
| AIS2 | 88B | 162.025 |
| DSC | 70 | 156.525 |

### 1.2.6. AIS Receivers

| | |
|---|---|
| Frequency range | 156.025MHz to 162.025MHz |
| Channel spacing | 12.5kHz and 25kHz |
| AIS Modulation | 25kHz Channels: GMSK |
| AIS Modulation | 12.5kHz Channels: GMSK |
| AIS Data Rate | 9,600bits/s |
| Packet Error Rate (PER) | 10% or better at -107dBm (25kHz) |
| | 20% or better at -98dBm (12.5kHz) |
| Adjacent Channel Rejection | 70dB (25kHz) |
| | 50dB (12.5kHz) |
| Blocking and Intermodulation | PER 20% for 1 tone -15dBm at $F_o$ ±5.725MHz and<br>2 tones of -27dBm at $F_o$ +500kHz and $F_o$ +1MHz. |
| Large Signal PER (-7dBm) | 1% or better |
| Image Rejection | ≥ 70dB for 20% PER |
| IF Rejection | ≥ 70dB for 20% PER |
| Spurious Rejection | ≥ 70dB for 20% PER |
| Frequency Stability | ±1ppm |

### 1.2.7. AIS Transmitter

| | |
|---|---|
| Frequency Range | 156.025MHz to 162.025MHz |
| Output Power | 12.5W or 2W |
| Harmonic Emission | ≤ -77dBc (≤ 0.25µW) |
| Spurious Emission | ≤ -77dBc (≤ 0.25µW) |
| Ramp Up | ≤ 1ms |
| Ramp Down | ≤ 1ms |
| Antenna Output Impedance | 50Ω |
| Channel Protection | 1 second max on air |
| Frequency Accuracy | ±0.5kHz (Normal temperature conditions 15°C to 35°C)<br>±1kHz (Extreme temperature conditions –15°C to15°C and 35°C to 55°C) |

### 1.2.8. DSC Receiver

| | |
|---|---|
| Frequency Range | Always fixed to Channel 70 |
| Channel Spacing | 25kHz |
| Modulation | 1300Hz/2100Hz 2 Tone FSK |
| Data Rate | 1,200bits/s |
| BER | ≤ $10^{-4}$ at –107dBm |

| | |
|---|---|
| Adjacent Channel Rejection | 70dB (25kHz) |
| Blocking | ≥ 84dB |
| Image Rejection | ≥ 70dB |
| IF Rejection | ≥ 70dB |
| Frequency Stability | ±1ppm |

**NOTE:** When required, the AIS Unit may be equipped with a 4th receiver. This can be used where it is required to receive additional data such as radar footprint broadcasts from a shore station without interfering with normal AIS operation. It is also possible to replace the DSC receiver with another AIS receiver when DSC is not required. Contact your distributor for more details.

### 1.2.9. Alarm Relay

The AIS unit has an alarm relay built-in as a standard feature. It is accessible using the alarm interface connector, located on the rear panel.

| **Contact rating** | |
|---|---|
| Voltage (Average) | 24VDC |
| Current (Maximum) | 1A |

### 1.2.10. Compass Safe Distance

Compass Safe measurements, in accordance with IEC 60945, are given below in metres:

| Distance from Compass (m) | Compass Reading (Degrees) | Compass Deviation (Reading-Background) (Degrees) |
|---|---|---|
| Background (No EUT Present) | 270.00 | - |
| 0.1 | 276.7 | 6.7 |
| 0.2 | 271.1 | 1.1 |
| 0.3 | 270.2 | 0.2 |
| 0.4 | 270.0 | 0.0 |
| 0.5 | 270.0 | 0.0 |
| 0.6 | 270.0 | 0.0 |

It is recommended to mount the AIS unit more than 1m from the compass to prevent any interference.

### 1.2.11. Navigation Specifications (Internal Sensors)

8/12 Channel Internal Global Positioning System (GPS) [Standard].
Internal Differential Beacon Receiver (DBR) [Optional].

**NOTE:** The ship's GPS/DGPS NMEA sensor will normally be connected to any of the three sensor input ports (Sensor 1, Sensor 2 or Sensor 3). The internal GPS is always present but is only used for acquiring position data when it is differentially corrected and an external differentially corrected GPS is not available. Refer to Table 3: Position Sensor Precedence, on page 39, for a full position sensor precedence listing.

### 1.2.12. Listener and Talker Specifications

| Listener load | |
|---|---|
| $V_{in}$ = +10V, other input = GND | 1.8mA (typical) |
| $V_{in}$ = -10V, other input = GND | -2.7mA (typical) |
| Differential input voltage sensitivity | 200mV (typical) |
| **Talker drive capability** | |
| **Current drawn** | **Differential Output Voltage** |
| 25mA (typical) | 3V differential output |
| 48mA (typical) | 2V differential output |
| 58mA (typical) | 1.5V differential output |

# 2. INSTALLATION

Since the installation of an AIS unit is complex, an initial installation configuration report, made during installation, should be kept on board the vessel. This should include at least the following:

- AIS configuration data (i.e. MMSI, ship name, etc.)
- Antenna layout
- AIS arrangement drawing
- Interconnection diagram

## *2.1. Unpacking the Unit*

The AIS Unit package includes the following:

- AIS Unit
- Power connector
- Mounting bracket set with mounting screws
- 2 x Spare fuses
- This technical manual
- Alarm output connector
- Declaration of Conformance
- Factory test result sheet
- CD with AIMS utility and manual (Optional)

## *2.2. Mounting the Unit*

The AIS Unit should be mounted to a bulkhead, either on the bridge, in the chart room or the radio room. It may also be mounted to any suitable flat surface, where the unit will not be exposed to the elements and with access to all the relevant sensors and interfaces. AIS equipment is categorised as “Protected Equipment” under IEC 60945 (an environmental standard for equipment).

To prevent the build-up of heat, the AIS Unit should be mounted in a space with good ventilation.

Care must be taken when mounting the AIS Unit to ensure that there is sufficient space for the cables and connectors. In particular, sharp bending of the RF cables must be avoided.

- Attach the bracket assemblies to the unit, using the screws supplied, see Figure 2: Mounting the AIS Unit.
- Mount the unit to a suitable surface (as explained above), using the mounting brackets and some mounting screws.
- Ensure that the unit is mounted so that the display can easily be read for diagnostic and maintenance purposes.

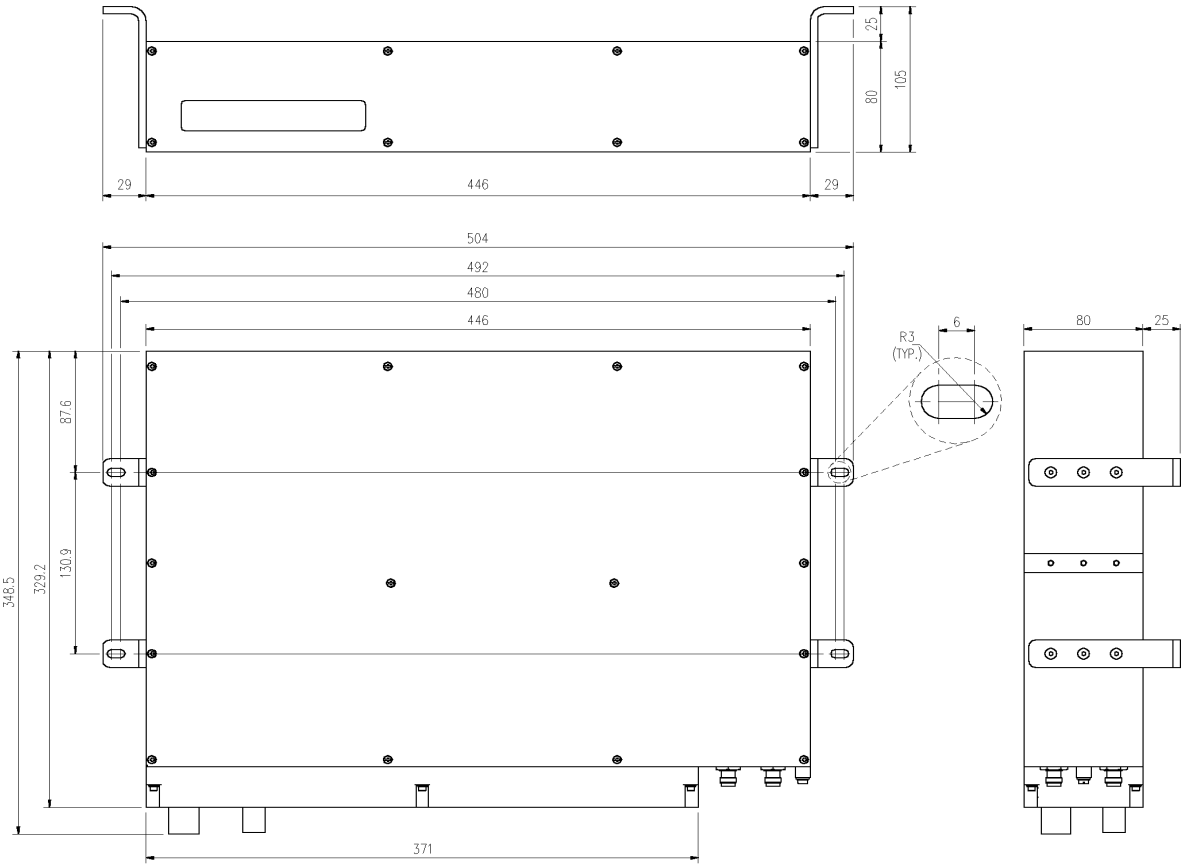


**Figure 1: AIS Unit Dimensions**

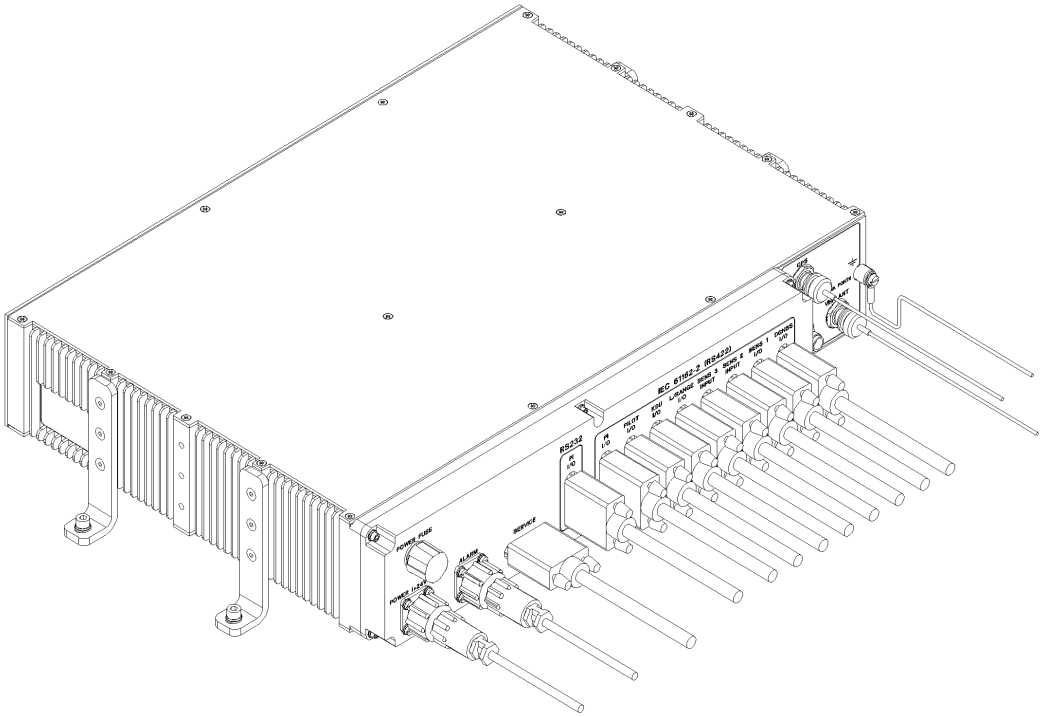


**Figure 2: Mounting the AIS Unit**

## 2.3. External Interfaces

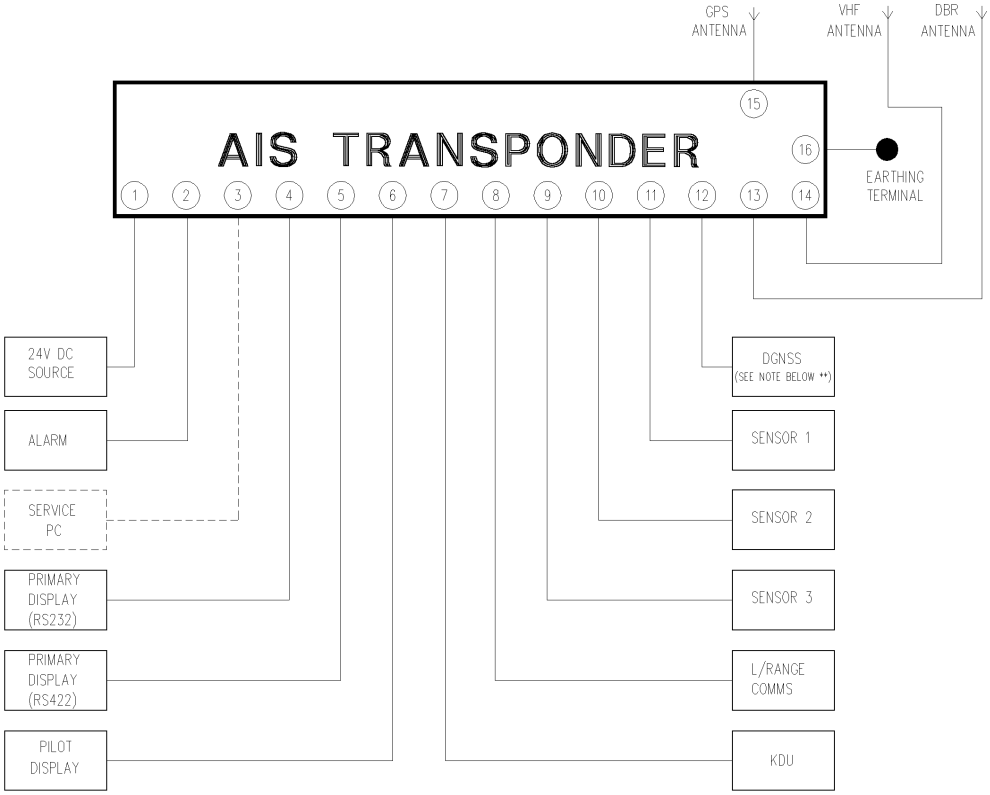


**Figure 3: External Interface Block Diagram**

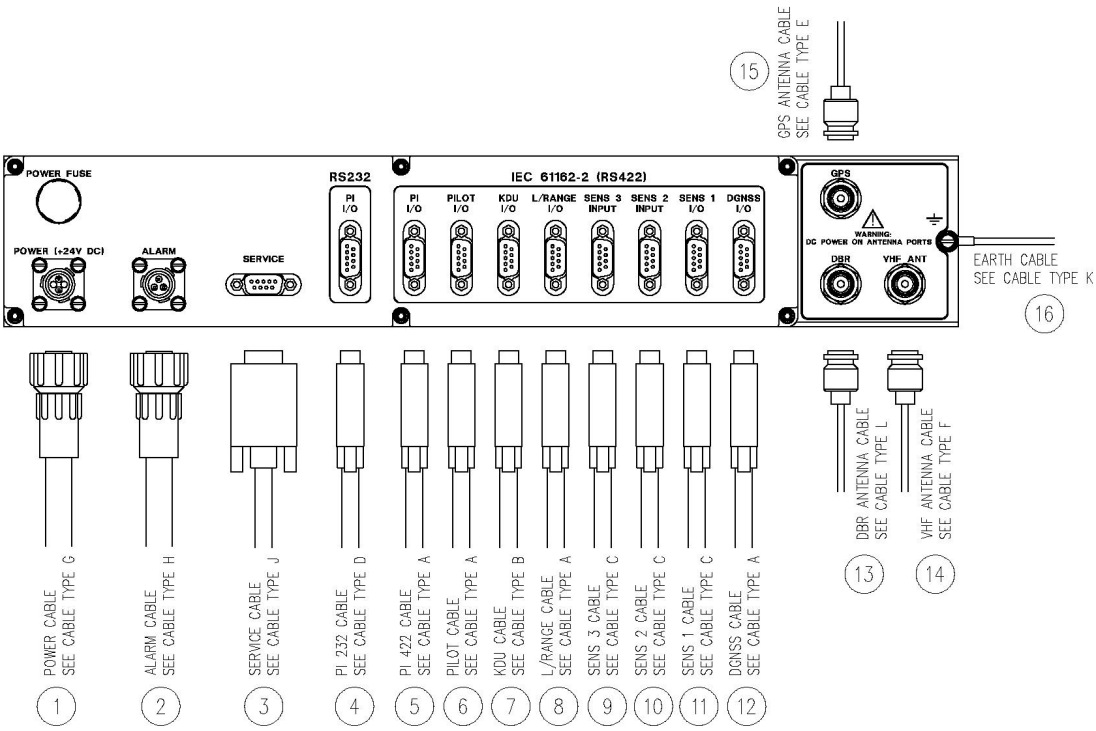


**Figure 4: External Interfaces on the rear panel of the AIS unit**

External Interface Legend (refers to Figure 3 and Figure 4)

| Interface Reference | Designation | Details |
|---|---|---|
| 1 | Power | +24VDC Input. Connector Type G |
| 2 | Alarm | Alarm Relay Output. Connector Type H |
| 3 | Service Port | For download of software upgrades. Cable Type J. Only used by service personnel. |
| 4,5 | Presentation Port (Primary Display) | Primary Display port. Cable Type D or A (*) |
| 6 | Pilot Port | Pilot's Display Port. Cable Type A. |
| 7 | KDU | Keyboard Display Unit. Cable Type B. |
| 8 | Long Range Port | For Log Range Communications Terminal. Cable Type A. |
| 9 | Sensor 3 | For Navigation Sensor Input. Cable Type C. |
| 10 | Sensor 2 | For Navigation Sensor Input. Cable Type C. |
| 11 | Sensor 1 | For Navigation Sensor Input. Cable Type C. |
| 12 | DGNSS | Output of GPS Differential Correction Data (when Beacon Receiver fitted as option or differential data is received on VDL). Input of externally derived Differential Correction Data. Cable Type A.<br><br>Otherwise unused) (**). |
| 13 | DBR Antenna | TNC DBR Antenna Port. Cable type L. |
| 14 | VHF Antenna | TNC VHF Antenna Port. Cable Type F. |
| 15 | GPS Antenna | TNC GPS Antenna Port. Cable Type E. |
| 16 | Earth | Chassis Earthing Terminal. Cable Type K. |

For cable type definitions, refer to section 2.7

**NOTES:**

* The RS232 port may not be used on ship installations, because it will cause currents to flow through the ship's hull and cause corrosion. RS232 ports also causes unwanted electromagnetic emissions.

** This is a non-mandatory port to provide for situations where an external differential data source is available and GPS Differential correction data can be fed to the GPS in the AIS unit. Also, when the AIS unit is fitted with the optional internal Differential Beacon Receiver, the Differential Correction Data from that Beacon Receiver will be output from this port for application to an external GPS. This port may only be used with the correct software options. Consult your supplier.

## *2.4. Grounding the AIS unit*

Using a crimp lug and 2.5mm x 2.5mm copper earth strap, the AIS unit should be connected to the ship's ground directly with an earth strap as shown below. The earth strap should not be more than 1m. If a longer earth strap is required, thicker wire should be used.

The copper earth strap and the steel bulkhead connection should be brazed soldered (i.e. hard solder), for vibration and anti-corrosion purposes. Protective paint can be applied over the earth lug to prevent any degradation in connectivity due to salt corrosion.

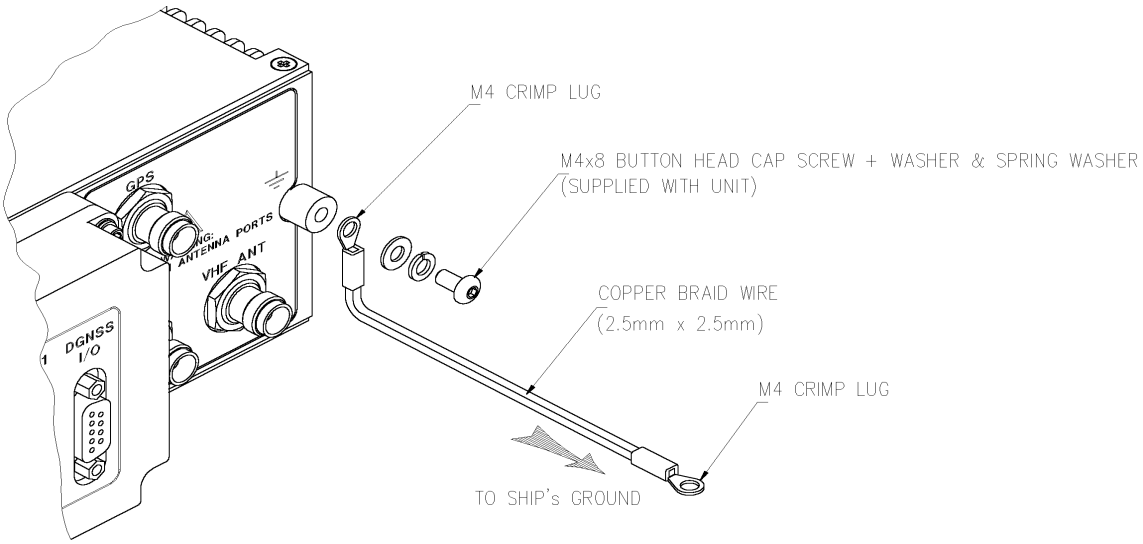


**Figure 5: Grounding the AIS unit**

## *2.5. AIS VHF Antenna installation*

The AIS unit is a low-noise device, but as it transmits short bursts of energy on a continuous basis, the possibility of interference with other VHF radios must be minimised by following the guidelines provided below. The interference will be heard as a periodic soft clicking noise on the VHF radiotelephone. This effect may become more noticeable when the radiotelephone is operating on channels near the AIS operating channels.

Location of the mandatory AIS VHF antenna should have first priority, since digital communications are more sensitive than analogue voice radios to interference created by reflections from obstructions such as masts and booms. To minimise interference, the following guidelines should apply:

- The AIS VHF antenna should have omni-directional vertical polarisation.
- The AIS VHF antenna should be placed in an elevated position that is as free as possible from constructions made of conductive materials, with a minimum of 2 metres in horizontal direction. The antenna should not be installed close to any large vertical obstruction. The objective is for the AIS VHF antenna to see the horizon freely through 360 degrees.
- The AIS VHF antenna should be installed safely away from interfering high-power energy sources such as radar and other transmitting radio antennas - preferably at least 3 meters away from, and outside of the transmitting beam.
- There should not be more than one antenna on the same level. The AIS VHF antenna should be mounted directly above or below the ship's primary VHF radiotelephone antenna, with no horizontal separation and with a minimum of 5 metres vertical separation. If it is located on the same level as other antennas, the distance apart should be at least 10 metres.

### 2.5.1 Alternative VHF antenna installation options

#### *2.5.1.1. Option 1*

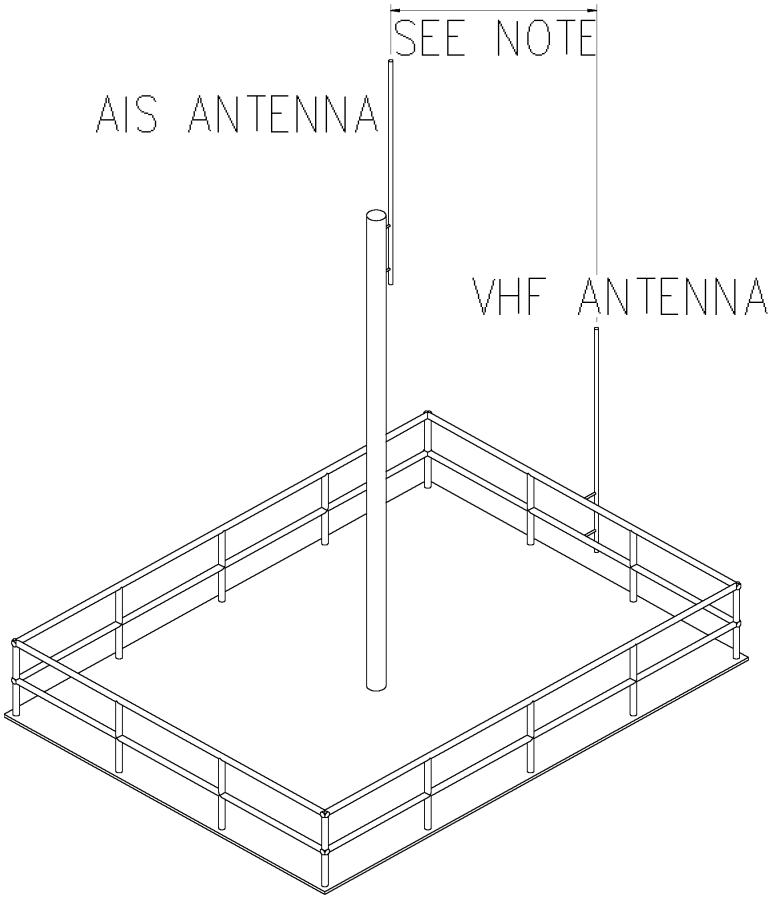


**Figure 6: AIS Antenna and Ship's VHF Placement**

**NOTES:**

- This arrangement should only be used when it is not possible to mount the antenna on a mast with suitable vertical antenna separation. **Maximum separation of the antennas is essential.**
- When this arrangement is used, great care must be taken to ensure that minimum interference is caused to other VHF equipment.

#### *2.5.1.2. Option 2*

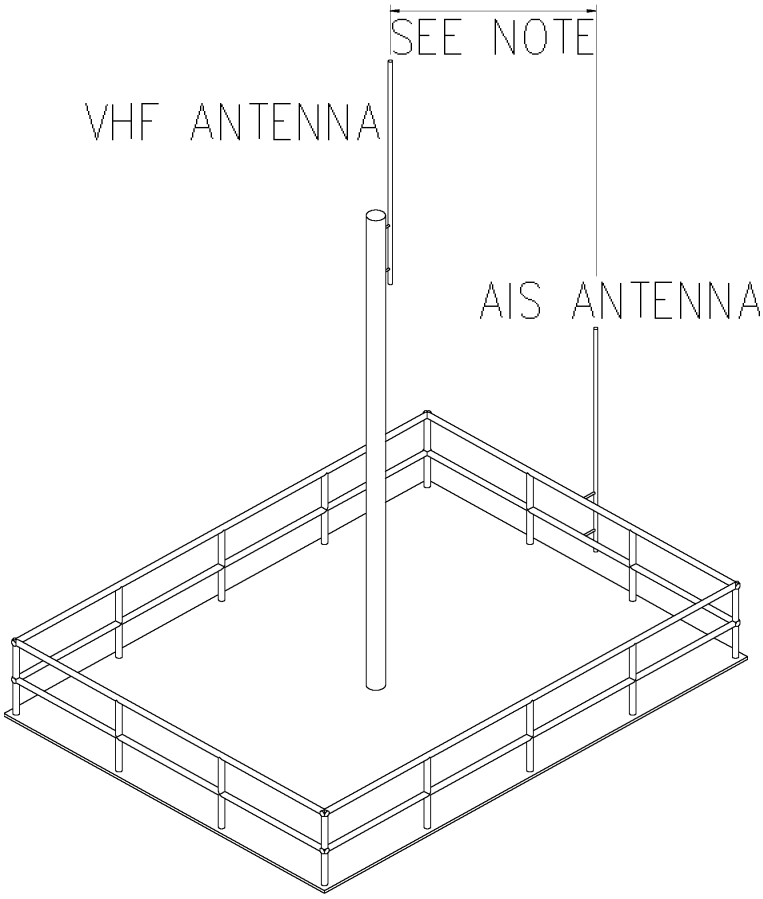


**Figure 7: Alternative AIS Antenna and Ship's VHF Placement**

**NOTES:**

- This arrangement should only be used when it is not possible to mount the AIS antenna on the highest possible position with suitable vertical antenna separation. **Maximum separation of the antennas is essential.**
- When this arrangement is used, great care must be taken to ensure that minimum interference is caused to other VHF equipment.

### 2.5.2. Minimising Interference: Additional Guidelines

When mounting the AIS antenna away from a mast that carries ship's VHF Antennas, always keep the AIS antenna as far away from the other VHF Antennas as possible

After installing and commissioning the AIS unit, remember to listen to the ship's VHF radios while the AIS unit is operating. In the unlikely event of interference, you will have to make changes to the antenna installation.

## *2.6. AIS GPS Antenna Installation*

The AIS GPS antenna installation position is critical to the working of the AIS system. The AIS GPS antenna must be installed so that it has a clear view of the sky. The antenna must see the horizon through 360 degrees, horizontally, and 5 to 90 degrees, vertically, above the horizon. Small diameter obstructions, such as masts and booms, will not seriously affect

GPS working. Such objects should not obstruct more than a few degrees of the sky for any given bearing.

The AIS GPS antenna should be at least 3 meters away from high power transmitters, and out of their transmitting beam. Such transmitters include the AIS VHF antenna, S-Band radars and Inmarsat-C.

If a DGNSS system is part of the AIS system, the installations shall be in accordance with IEC 61108-4 Ed1, Annex D.

To overcome the losses due to antenna cables, the GPS antenna pre-amplifier should be 0dB to 10dB more than the antenna cable loss.

## *2.7. Cable and Plug Connection Specifications*

### 2.7.1. RF Cables

All outdoor-installed coaxial cable connectors should be fitted with preventative insulation such as shrink-stocking with silicone to protect against penetration of water into the antenna cable.

Coaxial cables should be installed in separate cable channels, at least 100mm away from power cables. Where cables cross each other, this should be done at right angles (90°). The installation of RF cables should take into account that RF-cables' impedance may change if subjected to sharp turns. As a rule of thumb, coaxial cables should not turn with a radius of less than 5 times the cable outside diameter.

**NOTE:**

- Coaxial antennas and cables should be properly earthed.

#### *2.7.1.1. GPS Antenna (Cable type E)*

The cable between the GNSS antenna and the AIS unit should be routed directly to reduce electromagnetic interference effects. The RF cable should not be installed close to high-power lines, such as radar or radio-transmitter lines or the AIS VHF antenna cable. A separation of one meter or more is recommended to avoid degradation due to RF-coupling. Crossing of antenna cables should be done at 90 degrees to minimise magnetic field coupling.

| | |
|---|---|
| Cable: | RG213 is recommended |
| Maximum recommended cable length: | 20m (with an active GPS antenna) |
| Cable connector: | TNC male connector at AIS unit side. |

**NOTE:**

- An excessively long cable will degrade AIS unit performance and possibly cause the GPS to not lock onto GPS satellites.
- The GPS antenna centre conductor carries a 5VDC output for powering an active GPS antenna. The maximum current driving capability of this 5V output is 150mA

#### *2.7.1.2. VHF Antenna (Cable type F)*

| | |
|---|---|
| Cable: | RG214 is recommended. |
| Maximum cable length: | The cable should be kept as short as possible to minimise attenuation of the signals. An attenuation of 0.8dB per 10 meter is normal for RG214 at 160MHz. Thus, for 50m, the attenuation will be 4dB. |
| Cable connector: | TNC male connector at AIS unit side. |

**NOTE:**

- An excessively long cable will degrade AIS unit performance and result in reduced range of operation.

#### *2.7.1.3. DBR Antenna (Cable Type L)*

| | |
|---|---|
| Cable: | RG 213 is recommended |
| Maximum recommended cable length: | 75m |
| Cable connector: | TNC male connector at AIS unit side. |

**NOTE:**

- An excessively long cable will degrade AIS unit performance and possibly cause the DBR to not lock onto beacon transmitters.
- The DBR antenna centre conductor carries a 5VDC output on the centre conductor for powering an active GPS antenna when a DBR is fitted and a combined GPS/DBR antenna is used. The maximum current driving capability of this 5V output is 150mA

### 2.7.2. Data Interface Connections

#### *2.7.2.1. Presentation Interface*

There are two physical connector ports: RS232 or RS422. The RS232 and RS422 ports cannot be used simultaneously. The RS232 port may not be used for ship installations. This port is used to connect the primary AIS display unit. All received messages (AIS) are sent out via this port; there is also a software user interface on this port. The data rate for this port is 38,400 bits/s. It operates on a protocol compliant with IEC 61162-2.

IEC 61162 places certain constraints on the shielding and isolation requirements with regards to the termination of the duplex Presentation Interface, Pilot, KDU and Long Range ports. The transmit and receive portions of the IEC 61162 ports must have separate shields. For this reason, it is recommended to use two separate shielded cables - one for the transmit section of the port and one for the receive section. For the transmit portion of the port, the shield of the cable must be connected to the connector shell. The shield for the receive portion of the port may not be connected at the AIS unit side.

The following general configuration must be followed:

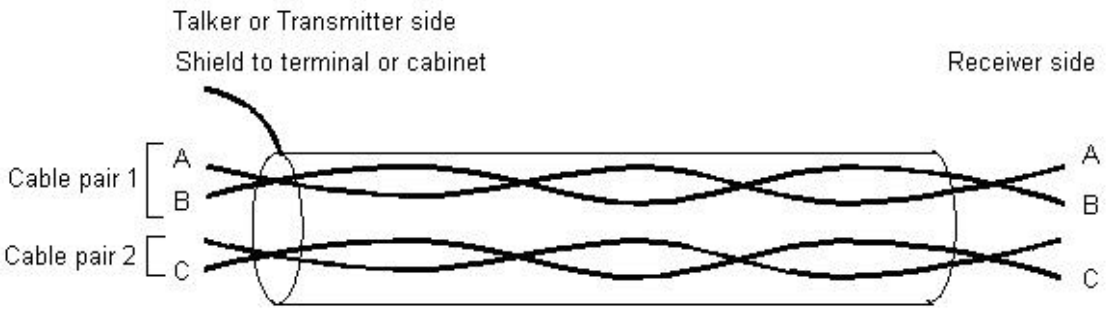


## Connections to the Presentation Interface

### Cable type A

| | |
|---|---|
| Cable: | Two Shielded twisted-cable 2 x 2 pair 0.5mm$^2$. |
| Maximum cable length: | 100m |
| Cable connector: | 9 way D-sub male. |

| PIN | Description | TX Cable pair | RX Cable pair |
|---|---|---|---|
| 1 | | | |
| 2 | | | |
| 3 | Input Line A (RX A) | | 1 |
| 4 | Output Line A (TX A) | 1 | |
| 5 | Output ground (TX C) | 2 | |
| 6 | Output Line B (TX B) | 1 | |
| 7 | | | |
| 8 | Input Ground (RX C) | | 2 (Can also be the shield of the cable if no Common is available) |
| 9 | Input Line B (RX B) | | 1 |
| Shell | Shielding | Shield of cable | Not connected |

### Cable type D for RS232 connection

| | |
|---|---|
| Cable: | Multi-cable 3 x 0.5mm$^2$ shielded. |
| Maximum cable length: | 15m |
| Cable connector: | 9 way D-sub male. |

| PIN (AIS unit) | Description | PC (DTE device) |
|---|---|---|
| 1 | | No Connection |
| 2 | Receive Data | 2 |
| 3 | Transmit Data | 3 |
| 4 | | No Connection |
| 5 | Signal Ground | 5 |
| 6 | | No Connection |

| PIN (AIS unit) | Description | PC (DTE device) |
|---|---|---|
| 7 | | No Connection |
| 8 | | No Connection |
| 9 | | No Connection |
| Shell of connector | Shield | Shell of connector |

Connect the shield of the cable to the shell of the connector at both sides.

#### *2.7.2.2. Pilot Port*

The Pilot Port is electrically identical to the RS 422 Presentation Port. The default data rate is 38,400 bits/s. It operates on a protocol compliant with IEC 61162-2.

**Connections to the Pilot Port**

Use Cable type A as described under the Presentation port.

In accordance with the document "Guidelines relating to SOLAS chapter V: Guidelines for installation of Shipborne Automatic Identification System (AIS)", the Pilot port shall be installed on the bridge near the pilot's operating position, so that the Pilot can connect his Personal Pilot Unit (PPU) to this point.

This Pilot plug must have the following characteristics:

- Type of plug: AMP/Receptacle. It can be made up to be mounted permanently to a position or it can be free-hanging.
- The shell size must be 11, 9-pin, Std. Sex 206486-1/2 or equivalent.

The cable connection is as follows:

| Pin (AIS DB 9 connector) | Connection | Pin (AMP Pilot plug) |
|---|---|---|
| 1 | | |
| 2 | | |
| 3 | RX A (Input line A) | 5 |
| 4 | TX A (Output line A) | 1 |
| 5 | | |
| 6 | TX B (Output line B) | 4 |
| 7 | | |
| 8 | | |
| 9 | RX B (Input line B) | 6 |
| NC | Shield of cable | NC |

#### *2.7.2.3. KDU (Keyboard Display Unit)*

The KDU port is electrically identical to the RS 422 Presentation Port and the Pilot Port as described above. The default data rate is 38,400 bits/s. It operates on a protocol compliant with IEC 61162-2.

For the layout of the connection at the KDU side, it is advised that the user/installer refer to the KDU manual (AIMS K1).

**Connections to the KDU Port**

Use Cable type A as detailed above under Presentation Interface. The cable for connecting the AIMS M4 to the AIMS K1 would be as follows:

| PIN (AIS DE 9 connector) | Description | TX Cable pair | RX Cable pair | PIN (AIMS K1 – KDU) |
|---|---|---|---|---|
| 1 | | | | |
| 2 | | | | |
| 3 | Input Line A (RX A) | | 1 | 9 |
| 4 | Output Line A (TX A) | 1 | | 4 |
| 5 | Output ground (TX C) | 2 | | 8 |
| 6 | Output Line B (TX B) | 1 | | 6 |
| 7 | | | | |
| 8 | Input Ground (RX C) | | 2 | 5 |
| 9 | Input Line B (RX B) | | 1 | 3 |
| Shell of DE9 | Shield | Shield of cable | | NC |
| NC | | | Shield | Shell of connector |

### *2.7.2.4. Long-Range Communication Port (L/RANGE I/O)*

The port is used for connection to a long-range communications terminal, for example Inmarsat-C. The protocol is according to IEC 61162-2. A conversion may be required between the Inmarsat C terminal and the AIS unit, depending on the interfaces required.

The port is configured to work at 38,400 bits/s.

**Connections to the Long-Range Port**

Use Cable type A as detailed above under Presentation Interface.

### *2.7.2.5. Sensor Input Ports (SENS 1, SENS 2, SENS 3)*

The AIS unit is equipped with sensor inputs for position, speed, heading and rate-of-turn. These ports are input ports only. They are RS 422 IEC 61162-2 protocol and operate at a default data rate of 4,800 bits/s, but will also auto configure to 38,400 bits/s if equipment that is connected to these ports has that bit rate. Sensors installed on board the ship for SOLAS Chapter V shall be connected to the AIS unit. The information that the AIS must transmit should be the information used for the navigation of the ship. When these sensors do not have outputs that comply with IEC 61162, the installer will experience interfacing problems.

The ports are used for connecting navigation sensors in accordance with NMEA 0183 standards.

Normally, one of the ports will be connected to the ship's GPS or other position-fixing system. The other two sensor ports will normally be connected to the ship's gyro and ROT sensor. The sensor ports are interchangeable.

**Connections to the Sensor Ports**

**Cable type C**

| | |
|---|---|
| Cable: | Multi-cable 2 x 2 x 0.5mm$^2$ shielded. |
| Twisted pairs: | 3 and 9, 8 and spare |
| Maximum cable length: | 100m |
| Cable connector: | 9 way D-sub male. |

| PIN | Description | Cable pair |
|---|---|---|
| 1 | | |
| 2 | | |
| 3 | Input Line A (RX A) | 1 |
| 4 | | |
| 5 | | |
| 6 | | |
| 7 | | |
| 8 | Input Ground (RX C) | 2 |
| 9 | Input Line B (RX B) | 1 |
| Shell of connector | Shield of cable | NC |

**IMPORTANT NOTE:** Do **not** connect the shield of the cable to any pin on the connector or to the backshell of the connector. Where a common is not available in the cable, the shield of the cable may be connected to pin 8 of the connector on the AIMS MIV.

### *2.7.2.6. DGNSS Port*

This is a non-mandatory port provided on the AIS unit that can provide GPS differential correction data output where an internal Beacon Receiver is fitted (as an option) as well as providing for an input when an external correction source is available. If will also output differential data to this port when a differential correction message (message 17) is received on the VDL.

The default data rate for this port is 4,800 bits/s. The port will operate to recommendation ITU R.M 823-3 protocol.

**Connections to the DGNSS Port**

Connection to this port is per Cable Type A.

### *2.7.2.7. Service Port*

The service serial port is used to upload software upgrades to the AIS unit. It is a RS232 level three-wire connection operating on a proprietary protocol at various data rates, as it is driven from the external application.
Refer to Figure 11: Cable Type J Assembly for connector assembly details.

WARNING: This port may only be used by qualified personnel. Permanent connection to this port is not allowed. The pin assignments on this port is not according to the RS232 specification, since there is a custom pin assignment made.

**Connections to the Service Port**

**Cable type J**

| | |
|---|---|
| Cable: | 2 x Multi-cable 5 x 0.5mm$^2$ shielded. |
| Maximum cable length: | 2m |
| Cable connector: | 9 way D-sub male at AIS unit. 2 x 9 way D-sub female at PC side. |

Uploading new software to the AIS unit requires that the connector cable has two multi-core terminations for programming different sections of the system (the MCM and the SCM) as illustrated in Figure 11. The two cable terminations are therefore described separately as follows:

**SCM Termination:**

| AIS unit PIN | Description | PC PIN |
|---|---|---|
| 1 | DSR | 4 |
| 2 | Transmit | 2 |
| 3 | Receive | 3 |
| 4 | CTS | 7 |
| 5 | Signal Ground | 5 |
| 6 | | No Connection |
| 7 | | No Connection |
| 8 | | No Connection |
| 9 | | No Connection |

**MCM Termination:**

| AIS unit PIN | Description | PC PIN |
|---|---|---|
| 1 | | No Connection |
| 2 | | No Connection |
| 3 | | No Connection |
| 4 | | No Connection |
| 5 | Signal ground | 5 |
| 6 | DSR | 4 |
| 7 | Transmit | 2 |

| AIS unit PIN | Description | PC PIN |
|---|---|---|
| 8 | Receive | 3 |
| 9 | CTS | 7 |

### 2.7.3. Power Supply Input

The power port will accept a +24VDC supply input. It is internally fused with a 6.3A fuse.
It is recommended that the cable length should not exceed 3m.

**Cable type G**

A twin core cable with a rated capacity of 10A should be used. The cable must have an outer diameter of either 5mm or 8mm to fit the power plug supplied with the AIS unit.

| 24V Power Supply Input Cable | |
|---|---|
| Cable Type | Suggested Maximum Length (m) |
| 2 x 0.75mm$^2$ | 3 |
| 2 x 1.5mm$^2$ | 10 |
| 2 x 2.5mm$^2$ | 15 |

**Power Supply Connector**
The connector is a FCI (full plastic Bantam) UTP6104S female. The connector has 4 pins, of which 2 are used as shown in Figure 9. The supply is galvanically isolated.

Supply Voltage: +24VDC

Fuse: 6.3A.

### 2.7.4. Alarm Relay Connection

The connector is a FCI (full plastic Bantam) UTP6103S female. The connector has three pins: 1, 2 and Common as shown in Figure 10. The Common pin is the common connection for normally open and normally closed connections and the “No Alarm” condition shall be:

- Normally open to pin 1
- Normally closed to pin 2

**IMPORTANT NOTE!** **The common connection must not be connected to the unit’s ground.**

**Alarm Relay characteristics**
The Alarm changes from “No Alarm” to “Alarm” on the malfunction of any part of the unit. This alarm connection is designed to be “failsafe”; that is, to activate whenever it is not

updated with a “no alarm” for more than 1 minute. The alarm relay will also report an “Alarm” condition then the AIS unit is powered down.

The relay contacts are rated at 24V, 1A. The relay contacts are galvanically isolated from the AIS unit housing.

**Cable Type H**

| PIN | Description |
|---|---|
| 1 | Normally Open |
| 2 | Normally Closed |
| Ground | Common |

## 2.7.5. Cable Assemblies

### *2.7.5.1. Cable Types A, B, C, D*

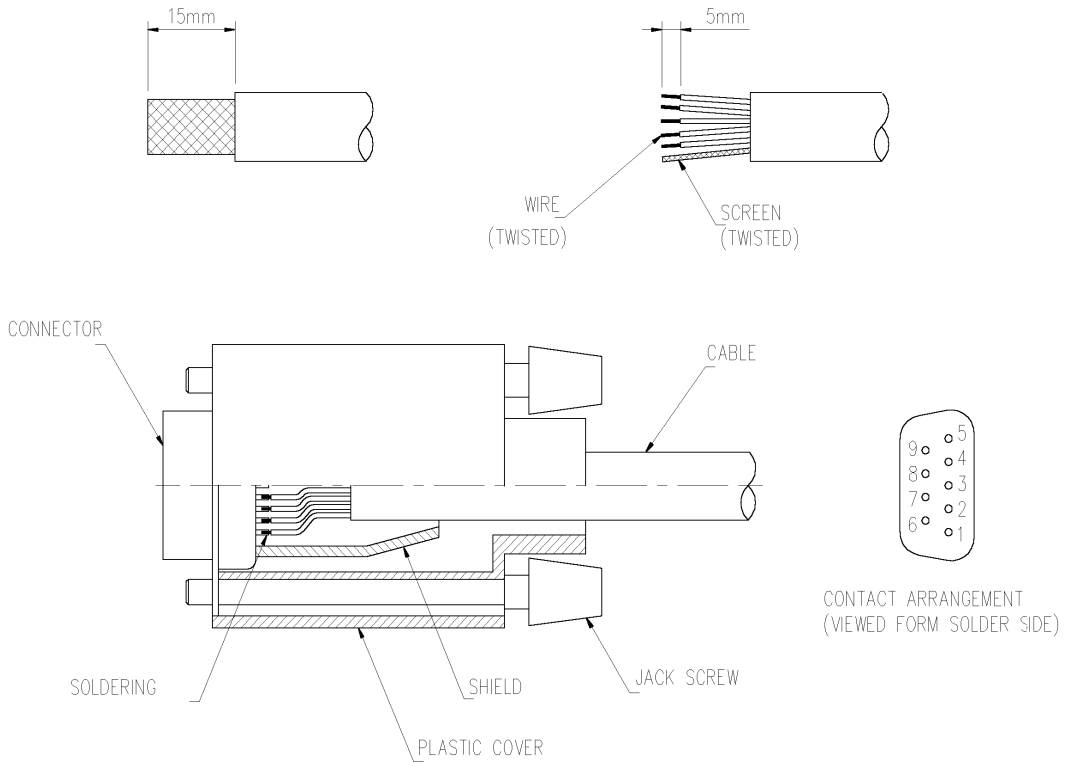


**Figure 8: Data Cable Terminations (AIS unit Side)**

**IMPORTANT:** Do not connect the shield of the cable to the shell of the connector for any receiving circuits.

### *2.7.5.2. Cable Type G Assembly – Power cable*

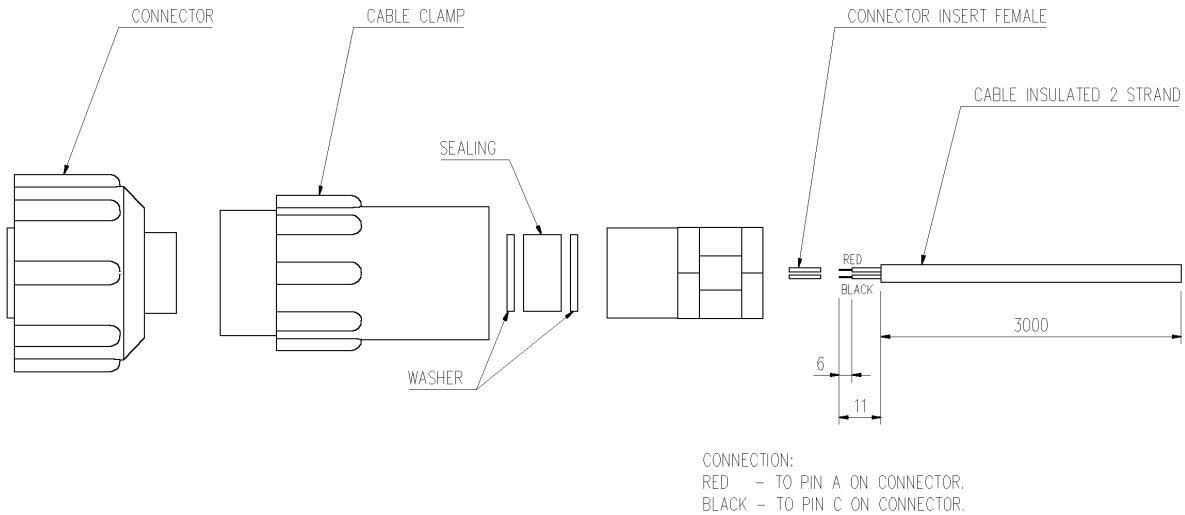


**Figure 9: Cable Type G Assembly (AIS unit Side)**

### *2.7.5.3. Cable Type H Assembly – Alarm cable*

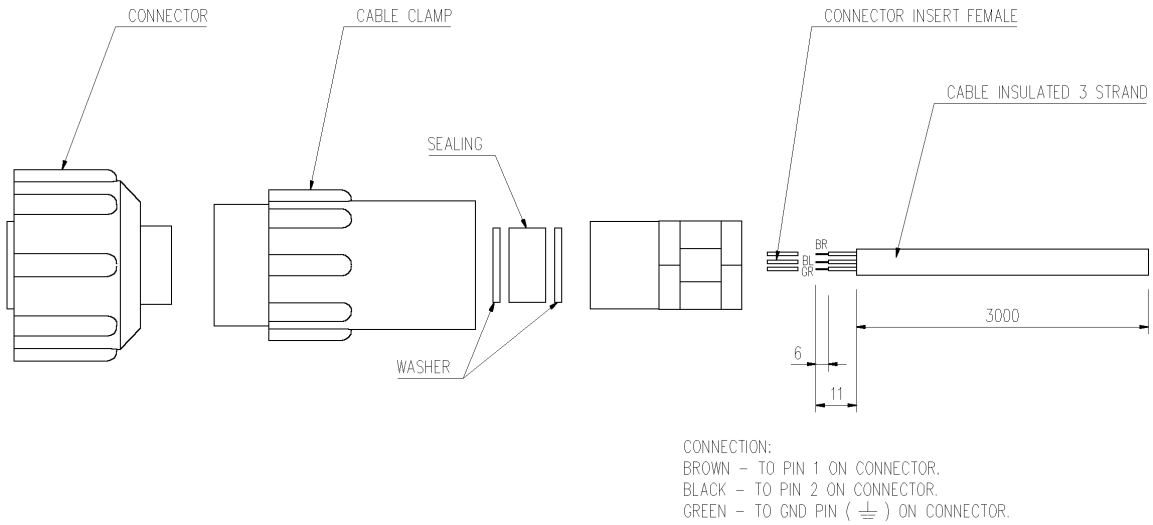


**Figure 10: Cable Type H Assembly (AIS unit Side)**

**IMPORTANT NOTE:** Slide the cable clamps, metal washers and sealing washer over the cable before pushing the pins into the connector socket portion. The connector inserts can only be removed from the connector socket with a special tool.

### 2.7.5.4. Cable Type J Assembly

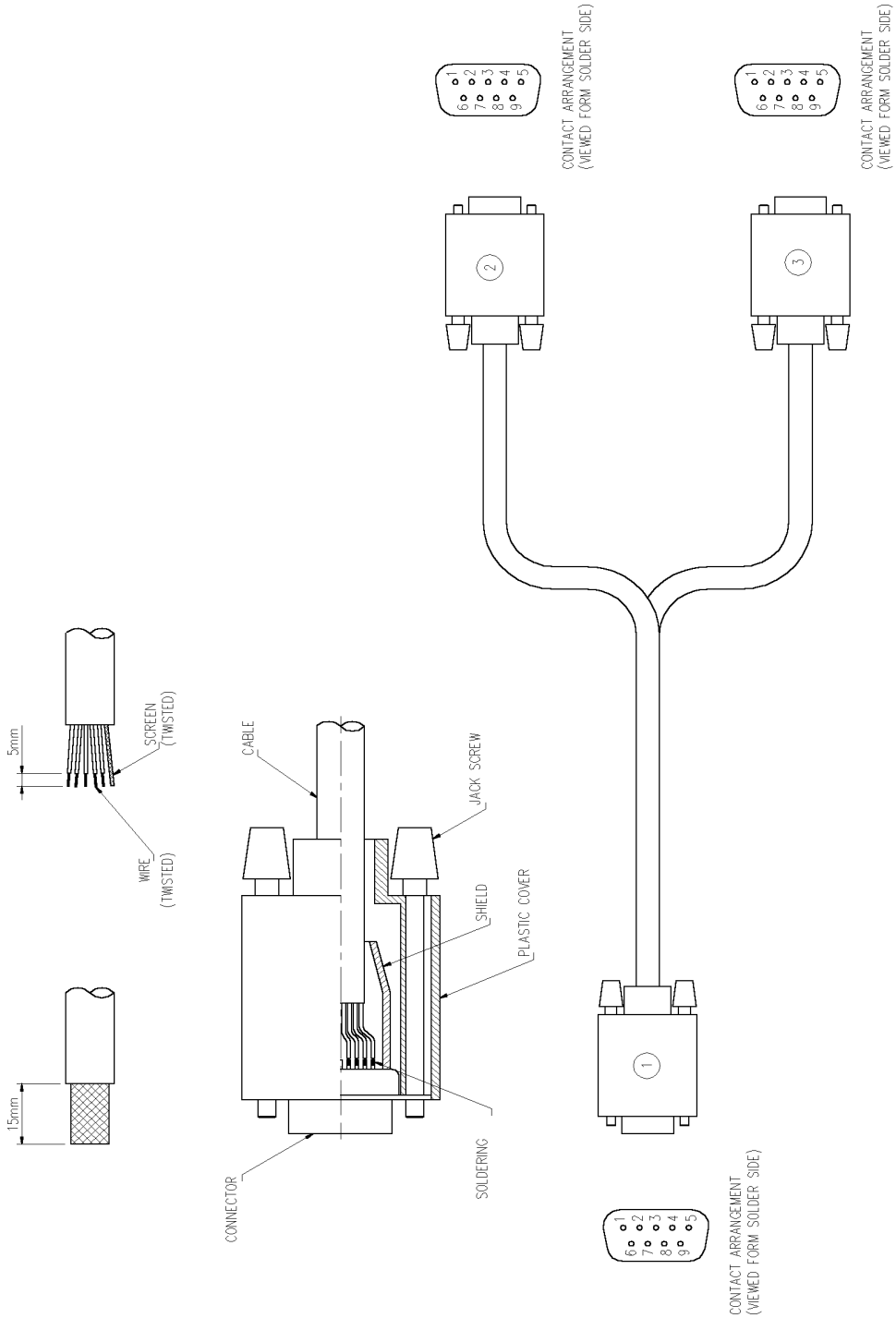


**Figure 11: Cable Type J Assembly**

### *2.7.5.5. Cable Type E, F and L Assembly*

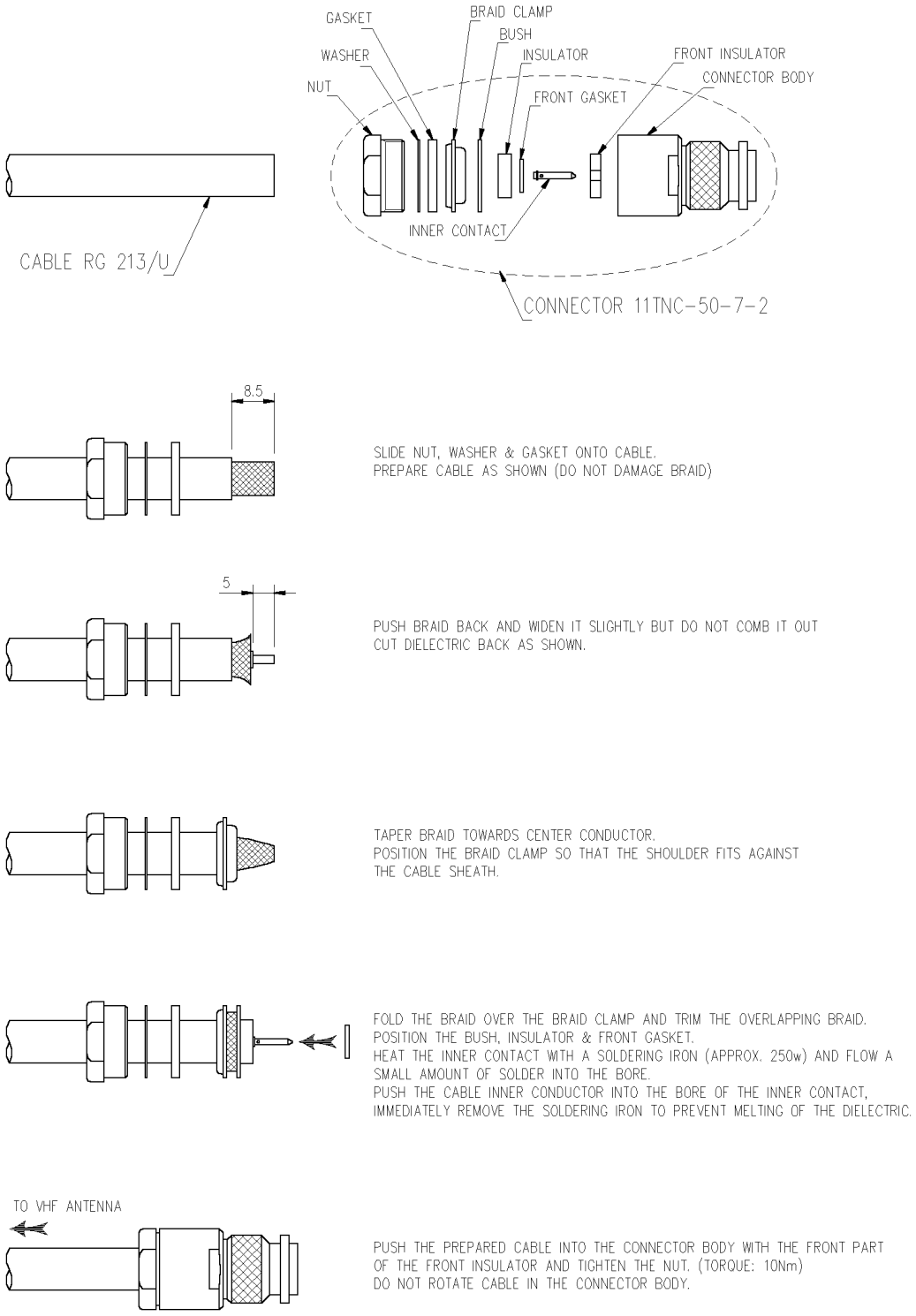


**Figure 12: Cable type E, F and L Assembly**

The drawing shows the fitting of RG 213, but is also valid for RG 214.

### *2.8. Installation Check*

Before powering on the AIS unit, the alarm relay must indicate an “Alarm” condition. Connect the 24 VDC source to the unit. Power on the unit.

The unit will be operational within 2 minutes after switch-on. Sensors will be allowed their permissible start-up time, that is, 30 minutes for GPS when there is no almanac data available; this is usually on first time power-up, or power-up in a different geographical region to that from which the system was shipped.

On boot-up, the system receivers and transmitter are set up for the default AIS and DSC frequencies.

All LEDs will illuminate when switched on, and the unit will run a self-test. Faults will be displayed on the LEDs. During the self test, all LED’s (except RS4 if not fitted) will illuminate red for 2 seconds, then Green for 2 seconds, then the normal status indication will start.

During normal operation, the SCM and MCM LED’s will blink on and off continuously to indicate normal operation.

Check that the LEDs illuminate in green, and that the alarm does not sound (refer to section 4.1 on page 49).

The alarm relay must have changed to the “No Alarm” condition by now.

# 3. TECHNICAL DESCRIPTION

## *3.1. AIS unit Overview*

Each AIS unit consist of:

- Two AIS radio receivers (RCM1 and RCM2)
- One Digital Selective Calling radio receiver (RCM3)
- A Radio Frequency Module (RFM)
- A Power Amplifier Module (PA)
- A Modulator Module (MOD)
- A Power Supply Module (PSM)
- A Main Controller Module (MCM)
- A Serial Communications Module (SCM)
- A Navigation Module with GPS and (optional) Differential Beacon Receiver
- A Motherboard
- A Connector Panel Module,
- A Display Module.

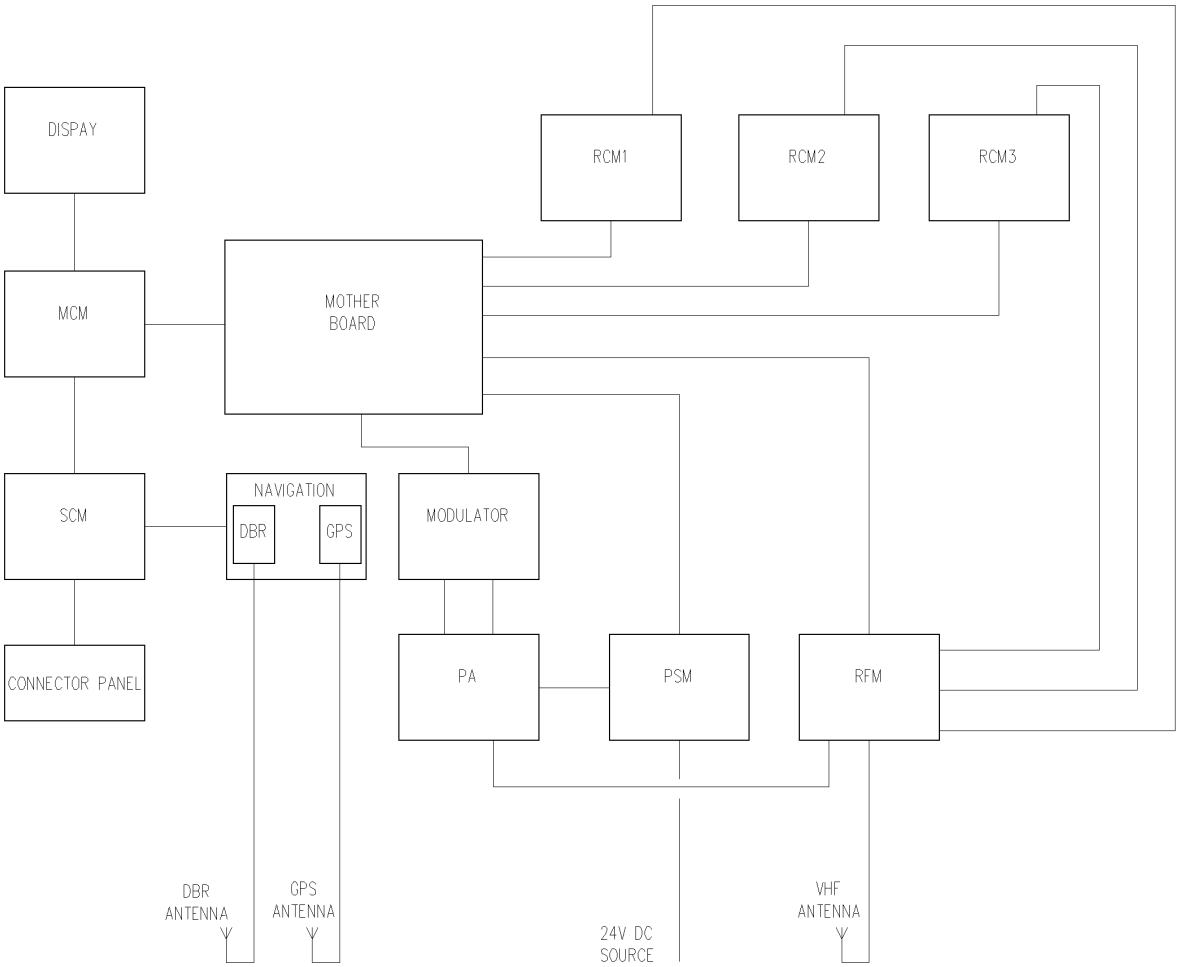


**Figure 13: AIS unit Block Schematic**

## *3.2. System Modes of Operation*

### 3.2.1. Mobile Station

In this mode, the AIS unit automatically sends out position reports at intervals determined by the ship's navigational status and speed. It can send/receive text and binary messages to/from other AIS units and operates on the AIS and DSC frequencies.

## *3.3. Serial Communications*

### 3.3.1. Presentation, Pilot and KDU ports

These ports represent 3 different types of display systems that can be used for displaying AIS target information. The information transmitted by the AIS to external interfaces, will be available on each of these ports. The roles of the three are as follows:

- Presentation port (RS422 or RS232 ports): Mainly used for connection to display systems onboard the vessel, such as ECDIS or ECS type systems. It's also used in the process of configuring the AIS unit.
- Pilot port (RS422 only): An additional port reserved for use by pilots. This can also be used to configure the AIS unit.
- KDU port (RS422 only): This port is dedicated for connection of a Keyboard Display Unit (AIMS K1), as dictated by the AIS specifications. This port can be used to configure the AIS unit.

Configuration of the AIS unit will require the use of passwords to "unlock" certain areas for configuration. The correct password will only "unlock" the specified area for 10 seconds, after which it will return to the "locked" state.

**NOTE:** All the password values are set to "00000" upon release from the factory. They must be set to other values by the installer.

The following is a table of all the international and proprietary sentences that you can expect to "send to" and "receive from" these 3 ports. Additional information on these messages can be found on the MDS website.

| Message header | Message description | Reaction of the system | Message direction |
|---|---|---|---|
| **International Sentences** | | | |
| $--VSD | Voyage static data<br>• Type of ship and cargo<br>• Maximum present draught<br>• Persons on board<br>• Destination<br>• ETA<br>• Navigational status<br>• Regional application flags | Re-program configuration.<br><br>Send updated VDL Message 5 and generate VDO message. | Input and Output on Query |

| Message header | Message description | Reaction of the system | Message direction |
|---|---|---|---|
| $--SSD | Ship static data<br>• Ship's name<br>• Call sign<br>• External GPS source antenna position<br>• DTE connected flag<br><br>SEE ALSO $PMDSSSD for internal GPS source antenna position | Re-program configuration<br><br>Send updated VDL Message 5 and generate VDO message | Input<br>Output on Query |
| !--ABM | Addressed Binary Message | Send either VDL message 6 or 12, depending on type requested | Input |
| !--BBM | Broadcast Binary Message | Send either VDL message 8 or 14, depending on type requested | Input |
| $--AIR | Interrogation message for mobile stations | Send VDL message 15 | Input |
| $--ACK | AIS acknowledge message | | Input |
| $--ACS | Channel Management Information source | | Output |
| $--ACA | Channel management message | | Input<br>Output on region change |
| $AIABK | Addressed binary VDL acknowledgement | | Output |
| !AIVDO | Output VDL messages broadcast by local station | Output every one second | Output |
| $AIALR | Alarm status | | Output |
| $AITXT | Sensor and alarm status | | Output |
| !AIVDM | Output VDL messages received by local station | | Output |
| $--AIQ | System information request message | | Input |
| **Proprietary Sentences** | | | |
| $PMDSACK | Proprietary acknowledge message | | Output |
| $PMDSCFI | Program IMO number | | Input / Output |
| $PMDSCFM | Program MMSI number | | Input / Output |
| $PMDSKDU | Input by KDU to indicate it is present every 10 sec. | Used by AIS unit to automatically set the DTE flag in ship static data if so configured | Input |
| $PMDSLED | Input to the AIS unit to adjust LED brightness on display panel. | AIS unit adjust LED brightness to the value in message | Input / Output |
| $PMDSLRC | Configure Long-range response. | | Input / Output |
| $PMDSLRM | Long range manual response. | | Input |
| $PMDSLRP | Long range poll notification. | Initiated from AIS Unit | Output |
| $PMDSMOD | Range, model and serial number request | Send in response to RQS | Output |
| $PMDSPRP | Output by AIS unit in response to $PMDSPWD. | Output only message, cannot be queried for | Output |

| Message header | Message description | Reaction of the system | Message direction |
|---|---|---|---|
| $PMDSPUP | Output by AIS unit after power up | Automatically output after power up | Output |
| $PMDSPWD | Input into AIS unit to open security system or update passwords | AIS unit responds with $PMDSPRP message | Input |
| $PMDSRQS | System information request message More information on retrieval of the security log in section 4.5. | Requested information via the PI | Input |
| $PMDSSEN | Output on query by the AIS unit to indicate the current sensors in use, also sent out on change of used sensors. | An external unit queries for this message. Also output when change of sensors in use occur. | Output |
| $PMDSSLI | Security log information | Sent on request by $PMDSRQS | Output |
| $PMDSSMC | Static Main Controller Module Configuration | | Input / Output |
| $PMDSSSD | Ship static data containing the internal GPS's antenna position | | Input / Output |
| $PMDSTST | Input into the AIS unit to switch on/off output of sensor data | Unit output all sensor data on PI port. | Input |
| $PMDSVDL | Used to program default channel parameters | When input, send proprietary ACK | Input / Output |
| $PMDSVER | Output on request, module software version and serial numbers | Output one message per module with the appropriate information | Output |
| $PMDSZDA | Output current time and date to KDU | Automatically output by AIS unit every 1 minute during second 0 or when polled for. | Output |

**Table 1: Presentation Interface Messages**

During commissioning of the AIS unit, the unit will need to be configured with the ship's MMSI and IMO numbers, static and voyage information and other related data. This is done via the AIMS Utility software or the Keyboard Display Unit (KDU). Only a reduced number of parameters can be changed via the KDU. Refer to the KDU and Utility Software manuals for this information. A number of these messages are proprietary see Table 1, for a list of all the messages.

For the output drive capability and input load see Section 1.2.12. The block diagrams for the input/output circuits can be found in Figure 17 and Figure 18 on page 58.

The security information can be accessed using the AIMS Utility software supplied with every unit. Please see the AIMS Utility documentation for more information. The security log can also be retrieved using a text terminal. Refer to section 4.5 for more details.

If you do not have this software please contact MDS, your local MDS agent or see our website.

The ship type, as found in the $--VSD message, must be set according to the following table:

| Identifiers to be used by ships to report their type | |
|---|---|
| **Identifier No.** | **Special craft** |

| | |
|---|---|
| 50 | Pilot vessel |
| 51 | Search and rescue vessels |
| 52 | Tugs |
| 53 | Port tenders |
| 54 | Vessels with anti-pollution facilities or equipment |
| 55 | Law enforcement vessels |
| 56 | Spare – for assignments to local vessels |
| 57 | Spare – for assignments to local vessels |
| 58 | Medical transports (as defined in the 1949 Geneva Conventions and Additional Protocols) |
| 59 | Ships according to Resolution No 18 (Mob-83) |

| **Other ships** | | | |
|---|---|---|---|
| **First digit (*)** | **Second digit (*)** | **First digit (*)** | **Second digit (*)** |
| 1 - reserved for future use | 0 - All ships of this type | - | 0 - Fishing |
| 2 - WIG | 1 - Carrying DG, HS, or MP IMO hazard or pollutant category A | - | 1 - Towing |
| 3 - see right column | 2 - Carrying DG, HS, or MP IMO hazard or pollutant category B | 3 - Vessel | 2 - Towing and length of the tow exceeds 200 m or breadth exceeds 25 m |
| 4 - HSC | 3 - Carrying DG, HS, or MP IMO hazard or pollutant category C | - | 3 - Engaged in dredging or underwater operations |
| 5 - see above | 4 - Carrying DG, HS, or MP IMO hazard or pollutant category D | - | 4 - Engaged in diving operations |
| - | 5 - reserved for future use | - | 5 - Engaged in military operations |
| 6 - Passenger ships | 6 - reserved for future use | - | 6 - Sailing |
| 7 - Cargo ships | 7 - reserved for future use | - | 7 - Pleasure Craft |
| 8 - Tanker(s) | 8 - reserved for future use | - | 8 - reserved for future use |
| 9 - Other types of ship | 9 - No additional information | - | 9 - reserved for future use |

**Table 2: Vessel and Cargo type**

**NOTES:**

DG: Dangerous Goods

HS: Harmful Substances.

MP: Marine Pollutants.

* The identifier should be constructed by selecting the appropriate first and second digits.

The following figure describes how the position of the EPFS / GPS antenna must be entered.

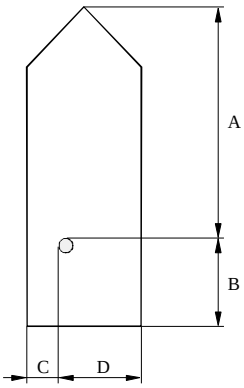


| | Distance (m) |
|---|---|
| A | 0-511 |
| B | 0-511 |
| C | 0-63;<br>63 = 63 m or greater |
| D | 0-63;<br>63 = 63 m or greater |

[redacted]

**Figure 14: Ship dimensions and related fields**

### 3.3.2. Sensor ports (input sentences only)

The AIS Unit must be able to accept various NMEA type sentences from a number of sensors onboard the vessel. The following section gives detail on how the AIS unit handles these messages. The AIMS MIV AIS Unit can accept the following messages:

| | Message Content | | | | | | |
|---|---|---|---|---|---|---|---|
| **Sensor** | **Position** | **SOG** | **COG** | **Heading** | **Rate of Turn** | **RAIM Indicator** | **Reference Datum** |
| **GPS** | GNS | | | | | | |
| | GLL | | | | | | |
| | GGA | | | | | | |
| | RMC | RMC | RMC | | | | |
| | | VTG | VTG | | | | |
| | | | | | | GBS | |
| | | | | | | | DTM |
| **Gyro** | | | | HDT | | | |
| **Rate of turn** | | | | | ROT | | |
| **Radar** | | OSD | OSD | OSD | | | |
| **Log** | | VBW | | | | | |

When any of the above messages are used, it must be input to the AIS unit at intervals of 1 second.

#### *3.3.2.1. Position and Time:*

For position and time information, the GNS and GLL sentences should be used. Optionally GGA and RMC may be used. All four of these sentences are implemented.

The priority for these sensors is tabulated below:

| Priority | Position Sensor Status | | Affected data in message 1,2 and 3 | | | |
|---|---|---|---|---|---|---|
| | | | Position accuracy flag | Time stamp | RAIM-flag | Position Longitude/Latitude |
| 1 | external DGNSS in use (corrected) | | 1 | UTC-sec | 1/0 | Lat/Lon (external) |
| 2 | internal DGNSS in use (corrected over air: msg 17) | | 1 | UTC-sec | 1/0 | Lat/Lon (internal) |
| 3 | internal DGNSS in use (corrected; beacon) | | 1 | UTC-sec | 1/0 | Lat/Lon (internal) |
| 4 a | external GPS in use (uncorrected) | | 0 | UTC-sec | 1/0 | Lat/Lon (external) |
| 4 b | external non-GPS EPFS in use | | | | | |
| 5 | internal GNSS in use (uncorrected) | | 0 | UTC-sec | 1/0 | Lat/Lon (internal) |
| 6 | no sensor position in use | manual pos. input | 0 | 61 | 0 | Lat/Lon (manual) |
| | | dead reckoning pos. | | 62 | | Lat/Lon (dead-reckoning) |
| | | no position | | 63 | | not available=181/91 |

**Table 3: Position Sensor Precedence**

**NOTE:** * See description of RAIM flag in section RAIM indicator:on page 40

When configuring the position sensor, it must be kept in mind that the Geodatic Datum of the data transmitted by the sensor is switched to WGS84 and the IEC 61162 DTM sentence is configured. The AIS assumes WGS84 format if no DTM message is received.

Since AIS is able to process two reference points for the antenna position, one for external and one for internal, both of them must be configured during installation. If more than one external reference point is used, the appropriate information must be transmitted to the AIS unit to adjust the external reference point. This must be done manually via the Presentation Interface, Pilot Port or KDU port. The $--SSD message must be used for the external reference point and the proprietary $PMDSSSD message must be used for the internal reference point.

More than one external GPS (NMEA source with ID = GP, GN or GL) may not be connected to the AIS unit at the same time. The AIS unit will not be able to distinguish between them and will assume that they are the same GPS, and use all of them for position fixing. Since their antennas will probably be at different positions on the ship, it will look to other ships as if the ship is “jumping around”. There may, however, be one GPS source and one non-GPS source connected at the same time. This non-GPS source will be used for positioning according to the priority table, Table 3: Position Sensor Precedence.

**NOTE:** If a NMEA sentence from a position sensor does not have a checksum, it will be accepted regardless. If, however the checksum is included, it has to be correct for the message to be used.

#### *3.3.2.2. Speed over ground:*

The VBW, VTG, OSD or RMC NMEA sentences are implemented. The Sensor precedence will give priority to the external sensor for SOG information. Thereafter it will use the active GPS as source.

#### *3.3.2.3. Course over ground:*

For COG the RMC, VTG or OSD NMEA sentences are implemented.

#### *3.3.2.4. Heading:*

The HDT and OSD NMEA sentences are implemented. A gyrocompass providing heading information is a mandatory sensor input to the AIS. A converter unit (e.g. stepper to NMEA) will be needed to connect to the AIS unit if the ship's gyrocompass does not provide an IEC 61162 output. Only 1 source for heading (HDT) information may be connected to the AIS unit, e.g. TIHDT or HEHDT. If more than one source is connected it may supply different information, which will cause the heading information to seem erratic.

#### *3.3.2.5. RAIM indicator:*

The GBS NMEA sentence is implemented for this. The error fields indicated are checked to be non-zero before RAIM active flag is set.

#### *3.3.2.6. Rate of turn:*

Some ships do not carry a Rate-Of-Turn (ROT) Indicator according to IMO A.526. However, if a rate-of-turn indicator is available and it includes an IEC 61162 interface, it shall be connected to the AIS.

The ROT sentence is implemented for this. ROT is also calculated from heading when ROT is not available. Refer to Table 4 for an explanation of the precedence used.

| Priority | Affected data in msg 1, 2, 3 Þ / Position Sensor status | contents of ROT field |
|---|---|---|
| 1. | Rate of Turn Indicator in use [1] | 0…+ 126 = turning right at up to 708 degrees per minute or higher;<br>0…- 126 = turning left at up to 708 degrees per minute or higher<br>Values between 0 and 708 degrees/min shall be coded by<br>$ROT_{AIS}$=4.733 SQRT($ROT_{sensor}$) degrees/min<br>where $ROT_{sensor}$ is the Rate of Turn as input by the external Rate of Turn Indicator (TI).<br>Values of 709 degrees per minute and above shall be cut to 708 degrees per minute . |
| 2. | other ROT source in use [2] | + 127 = turning right at more than $5^0$/30s (No TI available)<br>0 = no turn<br>- 127 = turning Left at more than $5^0$/30s (No TI available) |
| 3. | no valid ROT information available | –128 (80 hex) indicates no turn information available (default) |

**Table 4: Rate of Turn Sensor Precedence**

[1] Rate of Turn Indicator according to IMO A.526(13); determined by talker ID
[2] i.e. based on HDG information

### 3.3.3. Service port

Only service personnel may use this port. It is used for uploading new software to the unit and for diagnostic purposes.

### 3.3.4. Long Range port

| Message header | Message description | Reaction of the system | Message direction |
|---|---|---|---|
| **International Sentences** | | | |
| $--LRF | Long range function message | | Input/Output |
| $--LRI | Long range interrogation | | Input |
| $AILR1, $AILR2 and $AILR3 | Long range responses | | Output |

## *3.4. Alarm messages*

The AIS specification has various standard alarm messages that have been defined. The AIS unit use all these alarms as well as a number of proprietary alarms.

These alarms and indicators will give the operator a basic idea of what is happening with the unit itself, as well as with the sensors that are connected to the unit. These messages are made available on the following interfaces:

- Presentation port,
- Pilot port,
- KDU port.

When using a Terminal emulator the messages would typically be in the following format:

**$AIALR,000000,4,V,V,AIS:Rx channel 2 malfunction*37**

The alarm ID and description can be found in the following table.

| Alarm's description text | Alarm condition threshold exceeded | Alarm condition not exceeded | Alarm ID or Text Identifier | Reaction of the system to the alarm condition threshold exceeded |
|---|---|---|---|---|
| AIS: Tx malfunction | A | V | 001 | Stop transmission |
| AIS: Antenna VSWR exceeds limit | A | V | 002 | Continue operation |
| AIS: Rx channel 1 malfunction | A | V | 003 | Stop transmission on affected channel |
| AIS: Rx channel 2 malfunction | A | V | 004 | Stop transmission on affected channel |
| AIS: Rx channel 70 malfunction | A | V | 005 | Stop transmission on affected channel |
| AIS: General failure | A | V | 006 | Stop transmission |
| AIS: MKD connection lost | A | V | 008 | Continue operation with "DTE" set to "1" |
| AIS: External EPFS lost | A | V | 025 | Continue operation (see Table 3: Position Sensor Precedence on page 39) |
| AIS: no sensor position in use | A | V | 026 | Continue operation (see Table 3: Position Sensor Precedence on page 39) |
| AIS: no valid SOG information | A | V | 029 | Continue operation using default data |
| AIS: no valid COG information | A | V | 030 | Continue operation using default data |
| AIS: Heading lost/invalid | A | V | 032 | Continue operation using default data |
| AIS: no valid ROT information | A | V | 035 | Continue operation using default data |

**Table 5: AIS Standard alarm messages**

These standard alarm messages does not provide all the information necessary for technical staff to assess the problem, so a proprietary set of Alarms were defined.

Proprietary alarm numbers are reported by using the international NMEA alarm message with alarm ID's in the range 51 to 99 as defined below.

| Alarm's description text | Alarm or text message | Message ID | Reaction of the system |
|---|---|---|---|
| AIS: Power supply BIT failure | ALR | 51 | Stop transmission |
| AIS: SCM BIT failure | ALR | 52 | Stop transmission |

| Alarm's description text | Alarm or text message | Message ID | Reaction of the system |
|---|---|---|---|
| AIS: MCM BIT failure | ALR | 53 | Stop transmission |
| | | | |
| AIS: RCMx GMSK modem faulty | TXT | 60 | Stop transmission on this channel |
| AIS: RCMx FSK modem faulty | TXT | 61 | Stop transmission on this channel |
| AIS: RCMx correlator faulty | TXT | 62 | Stop transmission on this channel |
| AIS: RCMx Lock detect 1 faulty | TXT | 63 | Stop transmission on this channel |
| AIS: RCMx Lock detect 2 faulty | TXT | 64 | Stop transmission on this channel |
| AIS: RCMx modem in wrong slot | TXT | 65 | Stop transmission on this channel |
| AIS: RCMx slot clock absent | TXT | 66 | Stop transmission on this channel |
| AIS: RCMx code checksum failed | TXT | 67 | Stop transmission on this channel |
| | | | |
| AIS: TCM GMSK modem faulty | TXT | 76 | Stop transmission |
| AIS: TCM FSK modem faulty | TXT | 77 | Stop transmission |
| AIS: TCM PA is shut down | TXT | 78 | Stop transmission |
| AIS: TCM lock detect 2 faulty | TXT | 79 | Stop transmission |
| AIS: TCM forward power over threshold | TXT | 80 | Continue operation |
| AIS: TCM reflected power over threshold | TXT | 81 | Continue operation |
| AIS: TCM PA temperature shutdown | TXT | 82 | Stop transmission |
| AIS: TCM PA temperature forced low power | TXT | 83 | Continue operation |
| AIS: TCM slot clock absent | TXT | 84 | Stop transmission |
| AIS: TCM code checksum failed | TXT | 86 | Stop transmission |

**Table 6: Proprietary alarm definitions**

**NOTES:**

- For alarm numbers 60 to 67 valid values for RCMx are x=1 to x=4. When a message is output for alarm 60 to 67, the text string will indicate from which RCM the alarm originated. I.e. an alarm for RCM 1 will show the alarm string "AIS: RCM1 GMSK modem faulty". These text string are output to give additional information on ALR id's 003 to 005.
- Text messages 80 and 81 above are output together with ALR 002.
- Text messages 76 to 79, 82, 84 and 86 are output as additional info with ALR 001.
- Text id 83 is output by itself – cause no ALR message.
- On alarm event - an ALR sentence will be output with 'Alarm condition' set to 'A' and 'Alarm ack state' set to 'V' indicating alarm activated - not acknowledged. When the ACK message is used to acknowledge and alarm (with corresponding ID) the alarm output every 30 sec will change to 'Alarm condition' set to 'A' and 'Alarm ack state' set to 'A' indicating alarm and acknowledged. When the alarm condition is cleared an ALR sentence will be output once with 'Alarm condition' set to 'V' to

indicate that the alarm condition is cleared. The 'Alarm acknowledge state' will be set to it's current condition and can be ignored.

All text messages in the table above will be output once, when the alarm activates – they will not be output every 30 seconds with the alarm.

### *3.5. Status messages*

| Alarm's description text | Alarm or text message | Message ID | Reaction of the system |
|---|---|---|---|
| System status | TXT | 90 | Outputs system status |
| Channel settings | TXT | 91 | Outputs VDL channel settings |

**Table 7: Proprietary status messages**

These messages are output to the Presentation ports once every 10 seconds. The information on these messages can be requested from MDS or refer to the MDS website.

### *3.6. AIS Receiver Module (RCM 1 or 2)*

The AIS receiver modules receive the VDL transmissions from other AIS units. These modules form an integral and important part of the operation of an AIS unit. It is therefore important that these units perform self-testing procedures in order to ensure proper functionality.

An alarm message relating to the specific receiver will be generated as follows:

- Receiver 1 failed – ALR with ID 3
- Receiver 2 failed – ALR with ID 4
- Receiver channel 70 failed – ALR with ID 5

For more detail about the additional information that is supplied also see Table 6 on page 43.

### *3.7. Usage of NMEA sentences*

The following table describes the NMEA sentences as implemented in the AIMS MIV unit:

| Message Header | Message Field | Not Used / Used | Description |
|---|---|---|---|
| $--DTM, ccc, a, x.x, a, x.x, a, x.x, ccc, | | | Datum Reference |

| Message Header | Message Field | Not Used / Used | Description |
|---|---|---|---|
| | ccc, | Not Used | Local datum code<br>WGS84=W84<br>WGS72=W72<br>SGS85=S85<br>PE90=P90<br>User defined=999<br>IHO datum code |
| | a, | Not Used | Local datum subdivision code |
| | x.x,a, | Not Used | Latitude offset (minutes) |
| | x.x,a, | Not Used | Longitude offset (minutes) |
| | x.x, | Not Used | Altitude offset (meters) |
| | ccc, | Used | Reference datum code<br>WGS84=W84<br>WGS72=W72<br>SGS85=S85<br>PE90=P90 |
| | | | |
| $--GNS, hhmmss.ss, llll.ll, a, yyyyy.yy, a, c--c, xx, x.x, x.x, x.x, x.x, x.x, | | | GNSS Fix Data |
| | hhmmss.ss | Not Used | UTC |
| | llll.ll,a | Used | Latitude |
| | yyyyy.yy,a | Used | Longitude |
| | c--c, | Used | Mode indicator |
| | xx, | Not Used | Nr of satellites in use |
| | xx, | Not Used | HDOP |
| | x.x, | Not Used | Antenna altitude (meters) |
| | x.x, | Not Used | Geoidal separation (meters) |
| | x.x, | Not Used | Age of differential data |
| | x.x | Not Used | Diff reference station ID |
| | | | |
| $--GLL, lll.ll, a, yyyyy, a, hhmmss.ss, A, a, | | | Geographic Position - Latitude / Longitude |
| | llll.ll,a | Used | Latitude |
| | yyyyy,yy,a | Used | Longitude |
| | hhmmss.ss<br>, | Used | UTC of position |
| | A, | Used | Status |
| | a, | Used | Mode |

| Message Header | Message Field | Not Used / Used | Description |
|---|---|---|---|
| | | | |
| $--GGA, hhmmss.ss, llll.ll, a, yyyyy.yy, a, x, xx, x.x, x.x, M, x.x, M, x.x, xxxx | | | Global Positioning System Fix Data |
| | hhmmss.ss | Used | UTC of position |
| | llll.ll,a | Used | Latitude |
| | yyyyy.yy,a | Used | Longitude |
| | x, | Used | GPS quality indicator |
| | xx | Not Used | Number of satellites in use |
| | x.x, | Not Used | Horizontal dilution of precision |
| | x.x,M, | Not Used | Altitude (meters) |
| | x.x,M, | Not Used | Geoidal separation (meters) |
| | x.x, | Not Used | Age of differential GPS data |
| | xxxx, | Not Used | Differential reference station ID |
| | | | |
| $--RMC, hhmmss.ss, A, llll.ll, a, yyyyy, a, x.x, x.x, xxxxxx, x.x, a, a, | | | Recommended Minimum Specific GNSS Data |
| | hhmmss.ss , | Used | UTC (used to sync 1PPS time - odd even second) |
| | A, | Used | status |
| | llll.ll,a, | Used | Latitude |
| | yyyyy.yy,a, | Used | Longitude |
| | x.x, | Used | Speed Over Ground |
| | x.x, | Used | Course Over Ground |
| | xxxxxx, | Used | Date ddmmyy |
| | x.x,a, | Not Used | Magnetic variation (degrees) |
| | a, | Used | Mode indicator |
| | | | |

| Message Header | Message Field | Not Used / Used | Description |
|---|---|---|---|
| $--VBW, x.x, x.x, A, x.x, x.x, A, x.x, A, x.x, A, | | | Dual Ground/Water Speed |
| | x.x, | Not Used | Longitudinal water speed (knots) |
| | x.x, | Not Used | Transverse water speed (knots) |
| | A, | Not Used | Status, water speed |
| | x.x, | Used | Longitudinal ground speed (knots) |
| | x.x, | Used | Transverse ground speed (knots) |
| | A, | Used | Status, ground speed |
| | x.x, | Not Used | Stern transverse water speed (knots) |
| | A, | Not Used | Status stern water speed |
| | x.x, | Not Used | Stern transverse ground speed (knots) |
| | A, | Not Used | Status stern ground speed |
| | | | |
| $--VTG x.x, T, x.x, M, x.x, N, x.x, K, a, | | | Course Over Ground and Ground Speed |
| | x.x,T, | Used | Course over ground, degrees True |
| | x.x,M, | Not Used | Course over ground, degrees Magnetic |
| | x.x,N, | Used | Speed over ground (knots) |
| | x.x,K, | Used | Speed over ground (km/hr) |
| | a, | Used | Mode indicator |
| | | | |
| $--OSD, x.x, A, x.x, a, x.x, a, x.x, x.x, a, | | | Own Ship Data |
| | x.x, | Used | Heading, degrees True |
| | A, | Used | Heading status |
| | x.x, | Used | Vessel course, degrees True |
| | a, | Used | Course reference |
| | x.x, | Used | Vessel speed |
| | a, | Used | Speed reference |
| | x.x, | Not Used | Vessel set, degrees True |
| | x.x, | Not Used | Vessel drift (speed) |
| | a, | Used | Speed units, K/N/S |
| | | | |
| $--HDT, x.x, T | | | Heading, True |
| | x.x,T | Used | Heading, degrees True |
| | | | |

| Message Header | Message Field | Not Used / Used | Description |
|---|---|---|---|
| $--GBS, hhmmss.ss, x.x, x.x, x.x, xx, x.x, x.x, x.x, | | | Global Satellite Fault Detection |
| | hhmmss.ss , | Not Used | UTC time of GGA or GNS fix associated with this sentence |
| | x.x, | Used | Expected error in Latitude |
| | x.x, | Used | Expected error in Longitude |
| | x.x, | Not Used | Expected error in altitude |
| | xx, | Not Used | ID nimber of most likely failed satellite |
| | x.x, | Not Used | Probability of missed detection of most likely failed satellite |
| | x.x, | Not Used | Estimate of bias in meters of most likely failed satellite |
| | x.x, | Not Used | Standard deviation of bias estimate |
| | | | |
| $--ROT,x.x,A | | | Rate Of Turn |
| | x.x, | Used | Rate of turn |
| | A, | Used | Status |

**Table 8 : NMEA message usage**

# 4. SERVICE

## 4.1. Explanation of the LEDs

The status LED's are located on the front panel of the AIS unit. This gives the operator or user a basic indication of the status of each of the modules within the unit. Use the following table as a guide to understanding what each LED indication means.

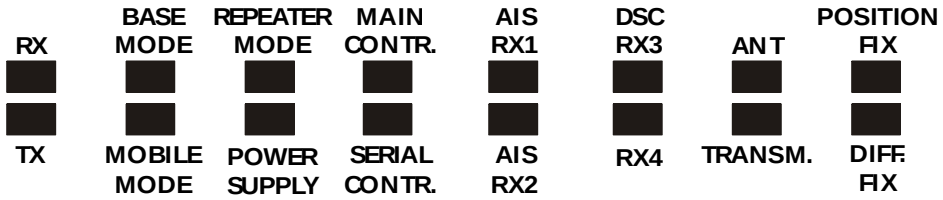


**Figure 7: AIS unit Front Panel LEDs**

| Function Indicators | | | |
|---|---|---|---|
| **LED** | **Explanation** | | |
| RX | This LED flashes Green when a message is received | | |
| TX | This LED flashes Green when a message is transmitted | | |
| Base Mode | This LED is illuminated when the AIS unit is operated as a base unit | | |
| Mobile Mode | This LED is illuminated when the AIS unit is operated as a mobile unit, that is, on a ship | | |
| Repeater Mode | This LED is illuminated when the AIS unit is operated as a repeater unit | | |
| **System Indicators** | | | |
| **LED** | **Description** | **Normal operation** | **Fault condition** |
| Power Supply | This LED is illuminated when the AIS unit is switched on and Power Supply is working. | | |
| Main Contr | Main Controller | Flashing green | Fixed red |
| Serial Contr | Serial Controller | Flashing green | Fixed red |
| AIS RX1 | AIS Receiver number 1 | Fixed green | Fixed red |
| AIS RX2 | AIS Receiver number 2 | Fixed green | Fixed red |
| DSC RX3 | DSC Receiver | Fixed green | Fixed red |
| RX4 (*) | Optional AIS Receiver | Fixed green (*) | Fixed red (*) |
| TRANSM | Transmitter | Fixed green | Fixed red |
| ANT | Antenna (VSWR indicator) | Fixed green | Fixed red |
| POSITION FIX | Internal GPS receiver | Fixed green while in GPS lock | Fixed red when no GPS lock |
| DIFF. FIX (*) | Optional Internal DBR receiver | Fixed green (*) | Fixed red (*) |

**Table 9: LED Operation**

**NOTES:** * When this option is not fitted, the LED will be off.

## *4.2. System Indicators (additional information)*

### 4.2.1. DIFF. FIX

If the AIS unit is functioning with differentially corrected data from an internal or external sourse, this LED will be green, otherwise it will be red.

### 4.2.2. Receiver failure

The AIS unit can detect a receiver failure using the methods described in section 3.6 on page 44.

Once the AIS unit has determined that there has been a receiver failure, it will raise an alarm. The type of alarm will relate to the specific receiver that has failed (please see section 3.4 on page 41 for more detail of the various alarm messages.

## *4.3. Alarm relay*

The alarm output is a double throw relay contact. This can be used to activate an external alarm when the unit malfunctions. The alarm can be de-activated by user intervention on the Keyboard Display Unit or Primary Display Unit.

The alarm will sound if there is:

- no GPS lock,
- a faulty module,
- a faulty antenna,
- a power failure,
- loss of sensor data,
- no communication with KDU.

See Table 5 in Section 3.4 on page 41 for more detail of the various alarm messages.

## *4.4. Troubleshooting*

**IMPORTANT NOTE:** The unit should only be opened by qualified personnel.

When a fault occurs, switch off the unit and have the faulty module replaced by a suitably qualified technician.

## *4.5. Security log retreival*

The AIMS MIV unit keeps track of how often the unit has been switched off for more than10 minutes. This log can be retrieved from the AIS unit using a text terminal or the AIMS utility software.

To retrieve the message using a text terminal, a serial cable must be connected to the Presentation , KDU or Pilot Port. The following message is sent into the port to activate the retrieval:
$PMDSRQS,5000,MDSSLI

There must be a <cr><lf> at the end of the line above. (Entered by pressing ENTER on a PC)

The output data from the port will look like this:

```
$PMDSSLI,5000,02,11,05,111821,02,11,05,133644,2559.8425,S,02803.6809,E*50
$PMDSSLI,5000,02,11,08,094409,02,11,08,100058,2559.8446,S,02803.6901,E*5D
$PMDSSLI,5000,02,11,08,133327,02,11,11,121708,5330.7792,N,01000.9818,E*4B
$PMDSSLI,5000,02,11,14,112833,02,11,14,115441,2559.8464,S,02803.6901,E*5F
$PMDSSLI,5000,02,11,18,100628,02,11,18,120032,9100.0000,N,18100.0000,E*41
$PMDSSLI,5000,02,11,22,093855,02,11,22,095852,2550.7792,S,02814.9818,E*5C
$PMDSSLI,5000,02,11,22,150124,02,11,26,123426,2550.7792,S,02814.9818,E*5A
```

There is one line for every entry in the security log. As an example, the first line is explained below:

| | |
|---|---|
| 5000 | - Message sequence number |
| 02 | - Number of years since the year 2000 at power off for this data entry |
| 11 | - Month at power off for this entry |
| 05 | - Day at power off for this entry |
| 111821 | - UTC time at power off for this data entry |
| 02 | - Years since year 2000 at power on for this entry |
| 11 | - Month at power on for this entry |
| 05 | - Day at power on for this entry |
| 133644 | - UTC time at power on for this entry |
| 2559.8425,S | - Switch off Latitude if available for this entry |
| 02803.6809.E | - Switch off Longitude if available for this entry |

## 4.6. Replacing the Modules

Modules may be replaced by removing the top or bottom cover and unplugging the module from its position after removal of the fixing screws and washers.

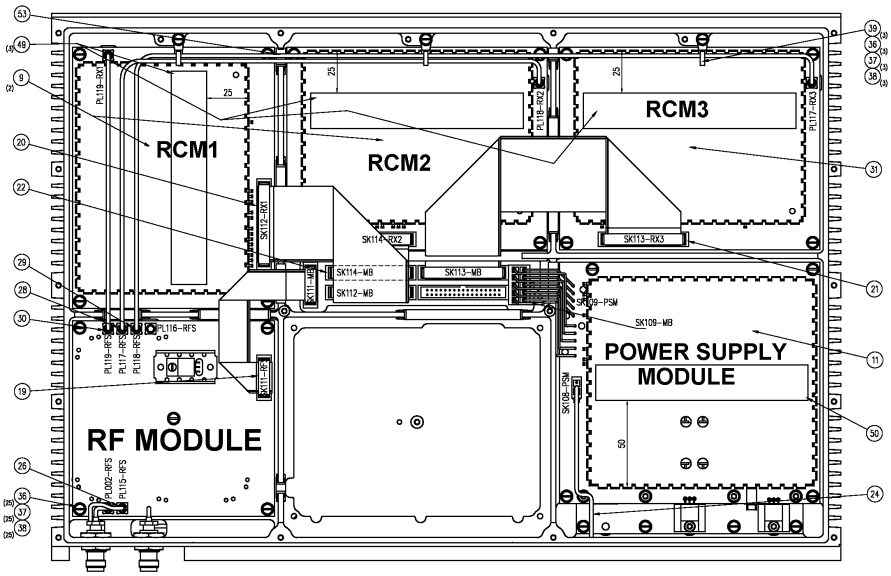


**Figure 15: AIS unit Module Layout (bottom view)**

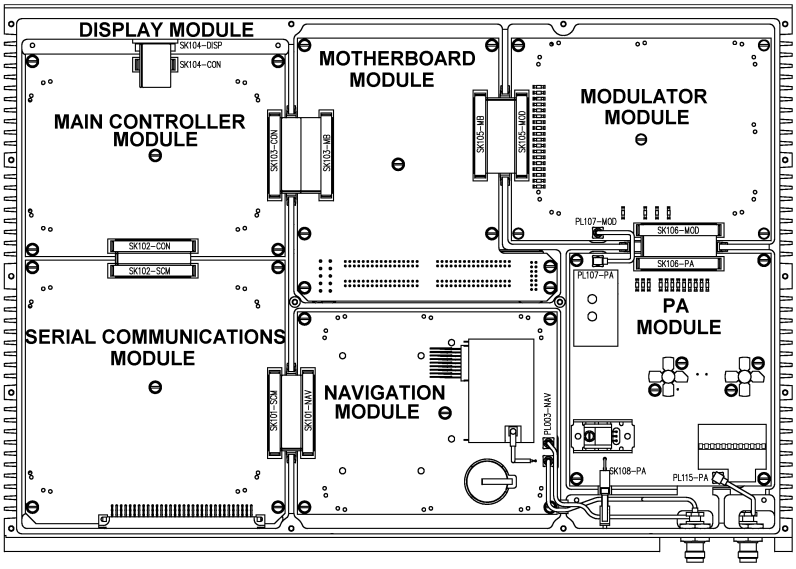


**Figure 16: AIS unit Module Layout (top view)**

**IMPORTANT NOTICE:**

If modules have been changed, please observe the following:

- If the MCM has to be replaced, the module will need to be reprogrammed with the ship's static, voyage and other configuration data.
- If the NAV module has to be replaced, there will be a waiting period of up to 30 minutes for the GPS to lock onto the satellites.
- The SCM and MCM modules can only be replaced if the replacement modules have software preloaded, otherwise new software must be uploaded via the Service Port using the 'AMDT AIS unit Flash Utility'.

# 5. APPENDICES

## 5.1. *Abbreviations*

The following is a list of abbreviations use in this technical manual:

| | |
|---|---|
| 1pps | 1 pulse per second |
| ACK | Acknowledge |
| AIMS | Automatic Identification and Data Management System |
| AIS | Automatic Identification System |
| AIS1 | Automatic Identification System channel 1 (161.975 MHz) |
| AIS2 | Automatic Identification System channel 2 (162.025 MHz) |
| ANT | Antenna |
| BER | Bit Error Rate |
| BIT | Built In Self Test |
| BS | Base Station |
| BSM | Base Station Mode |
| BT | Bandwidth Time product |
| COG | Course over Ground |
| DBR | Differential Beacon Receiver |
| DSC | Digital Selective-Calling |
| DTE | Data Terminal Equipment |
| ECDIS | Electronic Chart Display and Information System |
| ECS | Electronic Chart System |
| EPFS | Electronic Position Fixing System |
| ETA | Estimated Time of Arrival |
| GPS | Global Positioning System |
| HDLC | High-level Data Link Control |
| HSC | High Speed Craft |
| IEC | International Electro-technical Commission |
| IO | Input-Output |
| ISO | International Organisation for Standardisation |

| | |
|---|---|
| ITU | International Telecommunication Union |
| KDU | Keyboard Display Unit |
| LR | Long Range |
| MCM | Main Controller Module |
| MDS | Marine Data Systems |
| MMSI | Maritime Mobile Service Identities |
| NU | Not Used |
| PA | Power Amplifier |
| PC | Personal Computer |
| PER | Packet Error Rate |
| PI | Presentation Interface |
| PSM | Power Supply Module |
| RCM | Receive Channel Module |
| RF | Radio Frequency |
| RFM | Radio Frequency Module |
| ROT | Rate of Turn |
| RX | Receive |
| SCM | Serial Communications Module |
| SOG | Speed over Ground |
| TCM | Transmit Channel Module |
| TDMA | Time Division Multiple Access |
| TX | Transmit |
| UTC | Coordinated Universal Time |
| VDL | VHF Data Link |
| VHF | Very High Frequency |
| VSWR | Voltage Standing Wave Ratio |

## 5.2. Reference Documents

### 5.2.1. List of standards and specifications:

| Document Number | Title |
|---|---|
| IEC 61162-1 | Maritime Navigation and Radio Communication Equipment and Systems - Digital Interfaces: Part 1 - Single Talker and Multiple Listeners. |
| IEC 61162-2 | Maritime Navigation and Radio Communication Equipment and Systems - Digital Interfaces: Part 2 - Single Talker and Multiple Listeners High Speed Transmission. |
| IEC 61993-2 IS | Universal Shipborne Automatic Identification System (AIS). |
| ISO/IEC 3309, 1993 | Information Technology telecommunication and informational exchange between systems - HDLC procedures - Frame Structure. |
| ITU-R M.1084-2 | Interim solutions for improved efficiency in the use of Band 156-174 MH by stations in the Maritime Mobile Service. |
| ITU-R M.1371-1 | Technical characteristics for a universal ship-borne automatic identification system using time division multiple access in the maritime mobile band. |
| ITU-R M.493 | Digital Selective Calling (DSC) system for use in the Maritime Mobile Service. |
| ITU-R M.823-2 | Technical characteristics of differential transmissions for global navigation satellite systems from maritime radio beacons in the frequency band 283.5 - 315 kHz in region 1 and 285-325 kHz in regions 2 and 3. |
| ITU-R M.825-3 | Characteristics of a transponder system using DSC techniques for use with vessel traffic services and ship-to-ship identification. |
| ITU Manual | ITU Manual for use by the Maritime mobile and Maritime Mobile-Satellite Services. |
| IEC 61108-1 | Global navigation satellite systems (GNSS) - Part 1: Global positioning system (GPS) - Receiver equipment - Performance standards, methods of testing and required test results. |
| ISO 9000-3 | Guidelines for the development, supply, installation and maintenance of computer software. |
| IEC/EN 60945 | Maritime Navigation and Radiocommunication equipment and systems – General requirements-methods of testing and required results |

### 5.2.2. List of Related Software and Manuals:

| Module | Description | Part number |
|---|---|---|
| AIMS Utility Software for Windows | A Windows based utility for configuring and testing the AIMS range of products. Various levels of user access available. | |
| AIMS Utility Software User Manual | User Manual | |
| AIMS Utility for PalmOS | A PalmOS based utility for configuring the AIMS range of products | |
| AIMS Utility for PocketPC 2002 | A PocketPC based utility for configuring the AIMS range of products | |
| AIMS Utility for PDA User Manual | User Manual | |
| AIMS K1 User Manual | A Keyboard Display Unit that conforms to the requirements as laid out by the IMO | |
| AMDT AIS Unit Flash Utility | A utility for upgrading the AIMS MIV unit software | |

### 5.3. AIMS Serial interface "Listener" and "Talker" circuit diagrams

This section will give a basic circuit diagram of the RS422 input and output circuits of the AIS Unit.

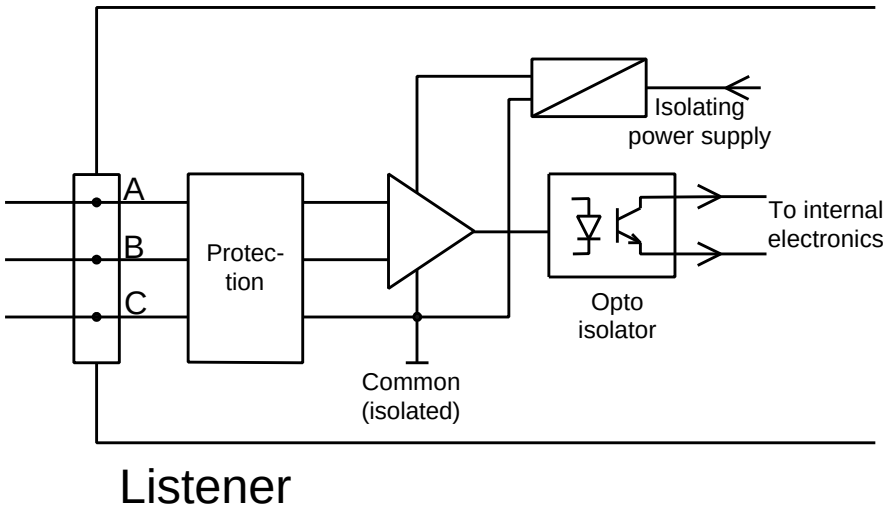


**Figure 17. RS422 General "Listener" circuit diagram**

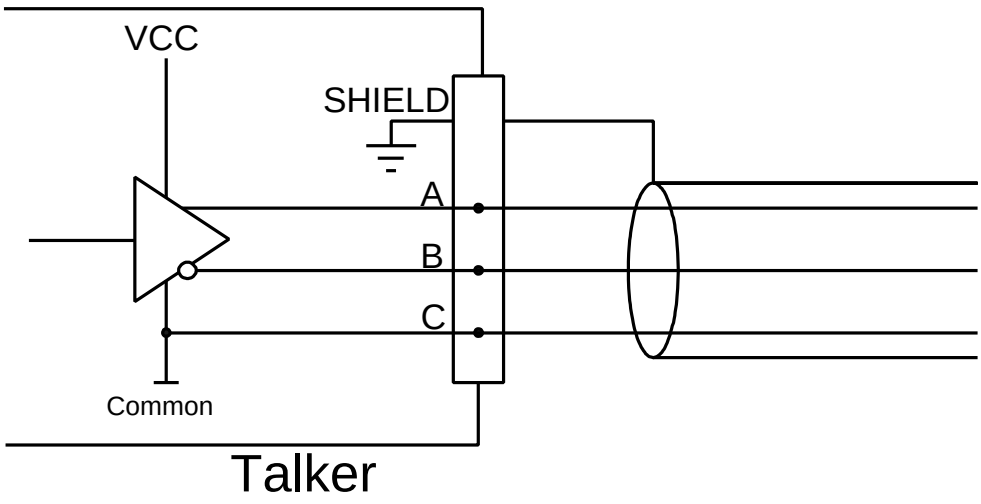


**Figure 18. RS422 General "Talker" circuit diagram**

**NOTES:**

MARINE DATA SYSTEMS

Innovation for Life

580 Kyalami Boulevard
Kyalami Business Park
Kyalami
Midrand
South Africa
Tel: +27 11 549 1800
www.marinedata.co.za
email: support@marinedata.co.za