AP460C Hardware User Guide

Read about and view specifications and compliance information for the AP460C devices in this topic. Install the AP460C devices using this topic.

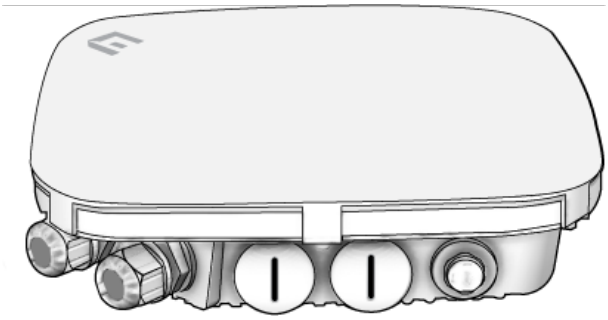

The AP460C is a Tri Radio 802.11ax access point based on advanced radio technology and is IP67 rated for harsh and extreme outdoor environments, with an extended temperature range (-40 C - +60 C). The AP460C tri-radio design delivers 802.11ax 2x2:2 and 4x4:4 data rates concurrently on the 2.4 and 5 GHz radios, and has a third radio for a dedicated dual-band sensor.

For regulatory and compliance information, see "Regulatory Compliance Statements".

Important! Change the Country Code

If your access point is configured for the World Regulatory Domain, it is important to set the country code to the country in which the AP will be deployed to meet regulatory requirements and for optimal wireless operation. To do this, follow these steps:

The country code selection is for World models only and is not available to FCC, CAN, and other country-specific models. Per FCC regulations, all Wi-Fi products marketed in the United States must be set to U.S. channels only.

1. Power on the AP and allow it to find and connect to ExtremeCloud IQ. Once the AP is connected it appears in the table of devices on the *Manage > Devices* page.
2. Select the check box next to the AP, and then choose **Assign Country Code** from the *Actions* drop-down list. In the dialog box, select the appropriate country from the drop-down list, and then click **Save**.
3. Upload your changes to the device.

Safety Guidelines

Safety Guidelines

The information in this section applies to AP460C devices.
The following safety icons are used in these guidelines to identify the type of precaution:

	To meet Canadian radiation exposure requirements, these devices should be installed at aminimum distance of 14" (35 cm) from people or animals.
	This icon indicates a general caution. Failure to comply with a caution notification can result in damage to equipment.
	This icon indicates an electrical caution. Failure to comply with an electrical notification can result in serious injury or death, and extensive damage to equipment.
	This icon indicates a laser caution. Failure to comply with a laser caution can result in serious injury.
The following table lists the safety precautions you should follow when installing your AP460C devices.	
	Extreme Networks devices must be installed by a professional installer who is certified to install these types of devices and to ensure that they are properly grounded and meet applicable local and national electrical codes.
	These devices are intended for indoor use only.
	Warning: This is a Class A product. In a domestic environment this product may cause radio interference in which case the user may be required to take adequate measures.
	Do not install the device in an environment where the operating ambient temperature might exceed the recommended ranges.
	For products available in the USA/Canada market, for the 2.4 GHz band, only channels 1-11 can be operated. Selection of other channels is not possible.
	Changes or modifications made to this device that are not expressly approved by the party responsible for compliance could void the user's authority to operate the equipment.
	Use only attachments and accessories specified by Extreme Networks.
	These devices are not intended for use by persons (including children) with reduced physical, sensory, or mental capabilities, or with lack of experience of knowledge unless they are given supervision or instruction concerning use of the devices by a person who is responsible for their safety. Children should be supervised to ensure that they do not play with the devices.
	Electrostatic discharge (ESD) can damage equipment and impair electrical circuitry. ESD damage occurs when electronic components are improperly handled and can result in complete or intermittent failures. Be sure to follow ESD-prevention procedures when handling electronic components and equipment.
	During operation, the surfaces of the AP460C device can become hot. Use caution when handling.
	To meet federal radiation exposure requirements, these devices should be installed at a minimum distance of 12" (30 cm) from people or animals.

Install the AP

The following sections describe how to mount your AP in an outdoor location on a pole or flat surface.

Shipping Carton Contents

The AP460C shipping cartons contain the following items:

- AP460C chassis with two installed M20 cable gland assemblies and plugs, two installed M25 seal caps.
- Hardware bag containing grounding hardware (M4 screw, split washer, and lock washer)
- Read Me card.

Install the AP

Mount the AP460C horizontally or vertically on a pole using the built-in brackets on the hardware, or on a solid flat surface using an accessory bracket (see "Accessories"). These devices can be installed in even the most extreme outdoor environments. The following sections describe the installation process.

Required Tools

To install your AP460C device horizontally or vertically on a pole, you will need the following items:

- Two hose clamps that accommodate the diameter of the pole to which you are mounting the device.
- A slotted screwdriver to tighten the hose clamps.

Install the Device

Before you install the device, make sure that you have all the materials and tools necessary, and familiarize yourself with the safety and site hazard warnings.

For best performance, deploy AP460C devices in relatively open areas at least 100' (30.5 m) apart from each other.

Install the Device on a Vertical or Horizontal Pole

Use the following steps to install the device on a vertical or horizontal pole.

1. Thread two hose straps of the correct diameter for the pole through the slots in on the back of the device and around the pole. Hose straps should be 1/2" (12 or 13 mm) wide and made of stainless steel.

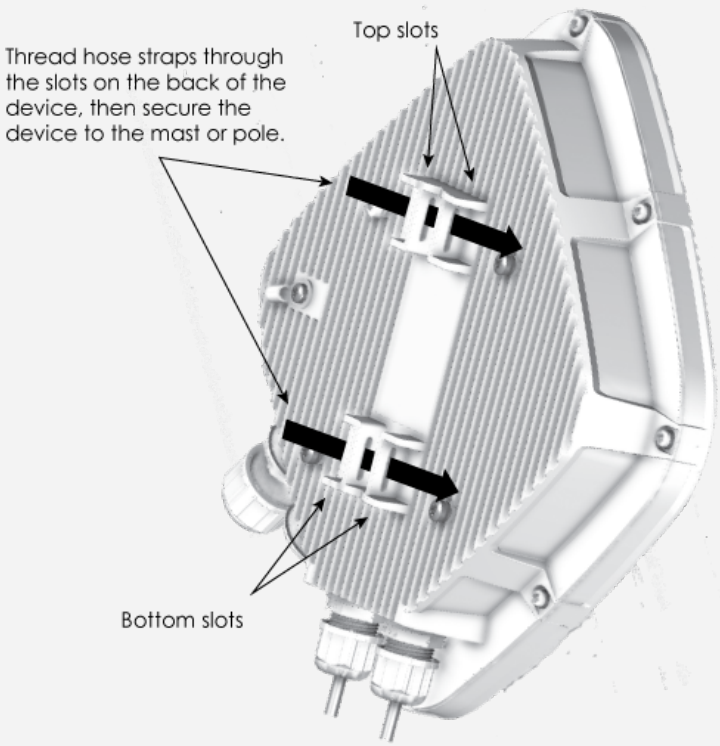

2. While holding the device against the pole, use a slotted screwdriver to tighten first the top and then the bottom hose straps until the device is secure. Make sure that the LAN glands are facing down (earth) to eliminate the chance of water entering the chassis. If you are installing the device to sit on top of a horizontal pole, make sure the top of the device faces up (sky) with the LAN glands are protected by the top.

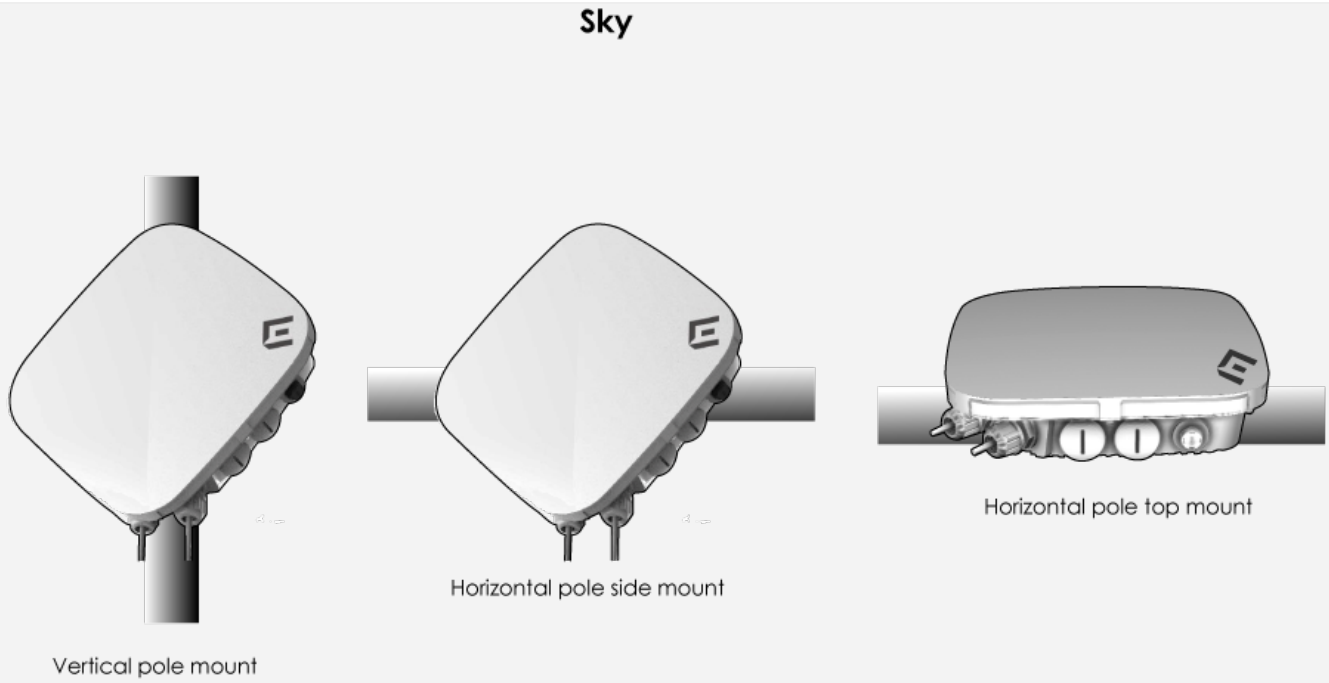

Install the Device on a Flat Surface

You can Install the device on a vertical or horizontal solid flat surface using the accessory wall bracket (AH-ACC-BKT-ASM). This kit contains the mounting bracket and four bolts without washers in the plastic bag labeled "*Wall Mount*". You will need to provide four mounting bolts or screws and wall mount anchors that are appropriate for the wall type where you are installing the device.

1. Insert the four M5 bolts that come in the bracket accessory kit into the holes on the bottom of the AP and torque each bolt to 16 inch-lbs.

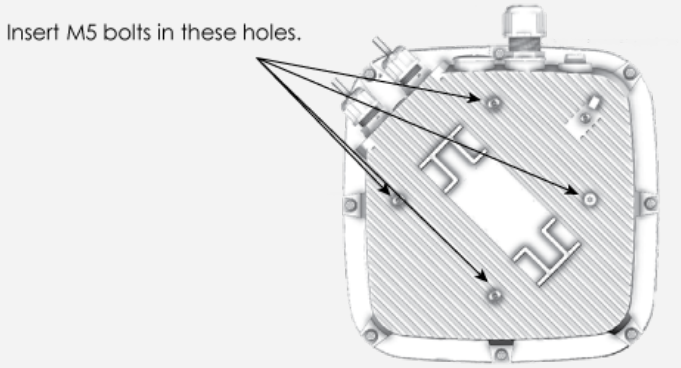

1. Use the bracket as a template to mark the location of the mounting holes in the wall. Use the holes indicted by the blue arrows in the illustration below.

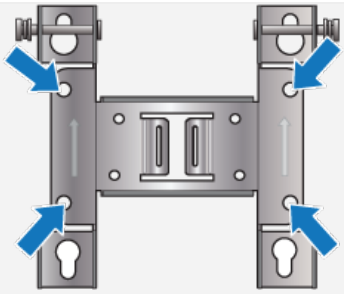

2. Drill a hole in the wall at each mark using a drill bit that is slightly smaller than the diameter of the screws so the screw threads will grip the wall securely.

If you are not installing the device on a concrete wall, you can use threaded screws and plastic wall anchors (not supplied) to mount the device.

3. Attach the bracket to the wall using the appropriate mounting screws for the wall type.
4. Insert the heads of the bolts on the device into the large end of the bracket keyholes and slide the device down until the bolts rest in the narrow end of the keyholes.
5. Tighten the locking screws on the bracket to secure the device.
6. Ground the device as shown below.

For horizontal mounts, be sure that the ports are facing earth to reduce the chance of water entering the chassis. As an added security measure, you can thread a safety strap through one of the cable strap slots in addition to the hose strap. Connect the other end of the strap to a secure object.

Ground the Device

Use the following steps to properly ground the AP460C.

1. Crimp the ground terminal onto a 10 AWG ground wire.
2. Insert the terminal on to the M4 screw, followed by the star washer.
3. insert the screw into the AP and torque it to 12 inch-lbs.
4. Connect the other end of the ground wire to an appropriate earthing location.

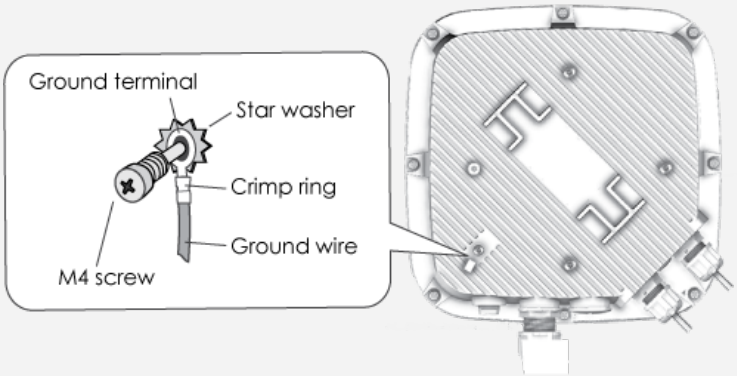

Install the Waterproof Ethernet Cable Housing

Use the waterproof Ethernet cable housing to ensure a weatherproof seal for the Ethernet cable. Use the following procedures to install the housing.

1. Disassemble the waterproof housing. There are four pieces: the sealing nut, the claw, a waterproof 2-part seal, and a threaded main housing body. Assemble these pieces around the Ethernet cable in the order shown here:

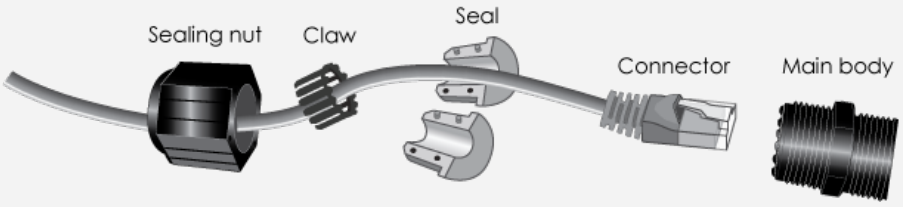

2. Insert the Ethernet cable through the sealing nut and claw.
3. Take the seal apart, insert the cable between the two halves and reassemble the seal.
4. Insert the seal into the claw.
5. Insert the Ethernet connector into the main body until the seal and claw fit snugly. Make sure that the small tabs on the claw fit into their counterparts on the main body.
6. Screw the threaded nut onto the threaded housing until it is tight.
7. Insert the Ethernet cable into the female connector on the chassis. Rotate the head of the threaded housing clockwise until it locks into place.
8. Connect the other end of the Ethernet cable to a PoE injector or PoE-enabled switch.

Accessories

The following accessories are available for the AP460C:

- **AH-ACC-PW-CBL-US**: 6' 18 AWG universal power cord with US plug
- **AH-ACC-PW-CBL-UK**: 6' universal power cord with UK plug
- **AH-ACC-PW-CBL-EU**: 6' universal power cord with EU plug
- **AH-ACC-PW-CBL-AU**: 6' universal power cord with AU plug
- **AH-ACC-PW-CBL-JP**: 6' universal power cord with Japan plug
- **AH-ACC-PW-CBL- KR**: 6' universal power cord with Korea plug
- **AH-ACC-BKT-ASM**: Mounting bracket assembly for wall mounts. Attach this bracket to the back of the unit using the four holes in the chassis.

Remove the RJ45 Cable Safely

If you need to uninstall the device for any reason, for example for troubleshooting, you will need to remove the RJ45 cable. Use the following steps:

1. For GE1 or GE2, loosen the gland sealing nut.
2. Move the gland cap, claw and seal down the cable at least 6 inches from the LAN connector.
3. Use a thin, strong non-conductive tool, such as a flat wooden stick to reach into the main gland body and depress the plastic locking latch on the RJ45 connector.

Make sure not to touch any components of the PCBA board near the gland area.

5. While pressing down on the latch, gently pull on and remove the cable.
6. Remove the sealing nut, claw, and seal from the cable.

Hardware Components

You can see the hardware components of the AP460C in the illustration below and read about them in the sections that follow.

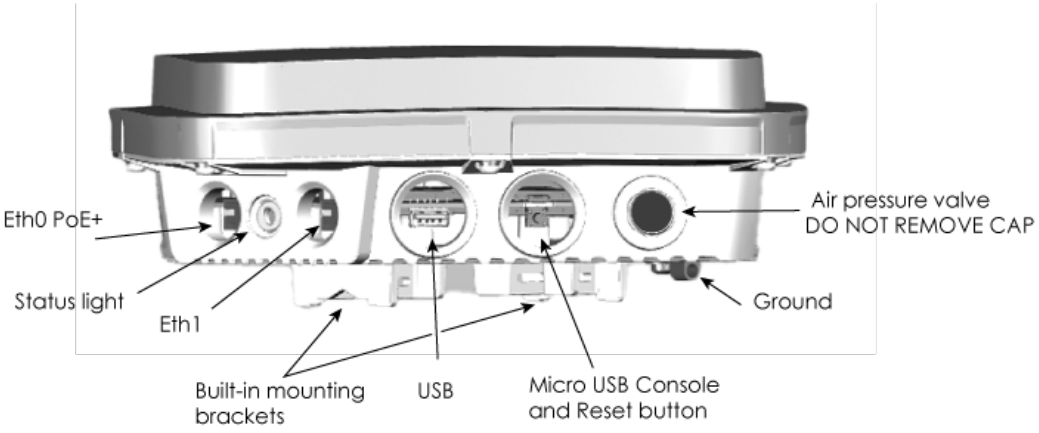

Component Descriptions

Status Light

The status light, located between the two Ethernet ports, conveys operational states for system power, firmware updates, Ethernet and wireless interface activity, and major alarms. At setup, this light cycles through the following sequence:

- **Solid White**: The power is on and the device is operational.
- **Solid Amber**: The device is on and is booting..
- **Blinking Amber**: The device is performing a firmware upgrade.
- **Dark**: The power is off.

Ethernet Ports

AP460C devices have two RJ45 Ethernet ports (Eth0 and Eth1) that automatically negotiate half- and full-duplex connections with the connecting device. The ports are autosensing and adjust to straight-through and crossover standard Cat2, Cat5, Cat5e, or Cat6 Ethernet cables automatically. The AP receives power through an Ethernet connection to the ETH0 port from PSE (power sourcing equipment) that is compatible with the 802.3at and 802.3at standards.

Micro USB Console Port

Remove the waterproof screw cap to access the micro USB port and the Reset button. Through the micro USB Console port you can make a serial connection between your management system and the AP. When you connect to the device using the micro USB Console port, the management station from which you connect to the device must have a VT100 emulation program, such as Tera Term Pro© (a free terminal emulator) or Hilgraeve HyperTerminal® (provided with Windows® operating systems from XP forward). The serial connection settings are: 9600 bits per second, 8 data bits, no parity, 1 stop bit, no flow control.
You can order a micro USB console adapter cable for this AP here.

To troubleshoot an AP460C, you must first uninstall it from the outdoor location.

This illustration shows the USB, Micro USB and Reset buttons, which are located behind waterproof screw caps.

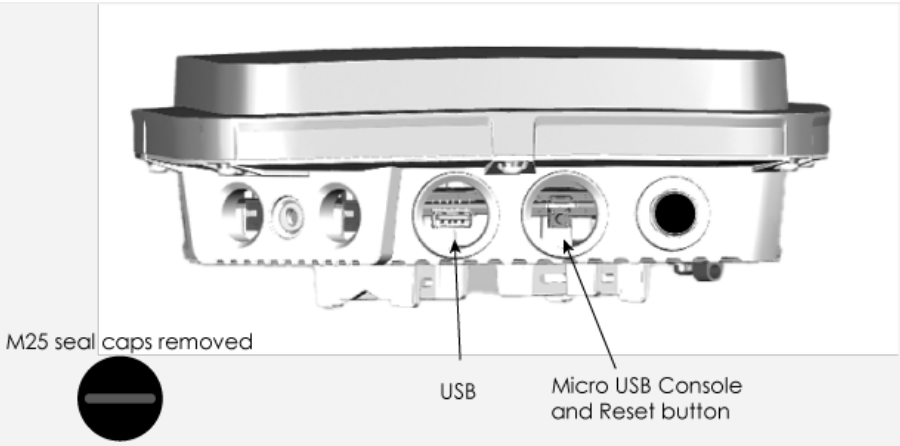

The pin-to-signal mapping for the Console port is shown below:

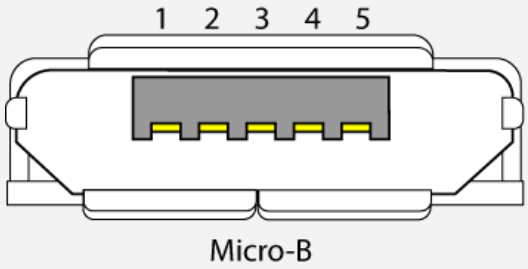

Pin	Definition
1	NC
2	RxD (input to AP)
3	TxD (output to terminal)
4	Signal (GND)
5	Signal (GND)

USB Port

AP460C devices have a standard USB port that you can use to connect USB-based beacons (iBeacon, for example) and IoT (Internet of Things) devices. To access the port, remove the gland cap screw.

Reset Button

The Reset button is located behind the same waterproof screw cap as the micro USB port. Use the Reset button to reset the device or restore the factory default settings.
To prevent the reset button from resetting the configuration, enter this command:
`no reset-button reset-config-enable`
When this command is enabled, pressing the button for 5 seconds will still reboot the AP, but pressing it for more than 10 seconds will not reset its configuration.

Hardware Specifications

The following sections list radio, device, power, and environmental specifications for the AP460C.

Interfaces

- 100/1000/2500 Mbps auto-negotiation RJ45 Ethernet PoE port
- 10/100/1000 Mbps auto-negotiation RJ45 Ethernet port

- BLE Bluetooth Low Energy
- IEEE 802.11a/b/g/n/ac/ax 4x4
- IEEE 802.11a/b/g/n/ac/ax 2x2
- IEEE 802.11a/b/g/n/ac/ax 1x1 scanner

Radio Specifications

802.11a

- 5.150-5.350, 5.470 - 5.850 GHz operating frequency
- Orthogonal Frequency Division Multiplexing (OFDM) modulation
- Rates (Mbps): 54, 48, 36, 24, 18, 12, 9, 6 with auto fallback

802.11b

- 2.4-2.5 GHz operating frequency
- Direct-Sequence Spread-Spectrum (DSSS) modulation
- Rates (Mbps): 11, 5.5, 2,1 with auto fallback

802.11g

- 2.4-2.5 GHz operating frequency
- Orthogonal Frequency Division Multiplexing (OFDM) modulation
- Rates (Mbps): 54, 48, 36, 24, 18, 12, 9, 6 with auto fallback

802.11n

- 2.4-2.48 and 5.150-5.350, 5.470 - 5.850 GHz operating frequency
- 802.11n modulation
- Rates: MCS0 - MCS7 (6.5 MBps- 600Mbps)
- 1x1, 2x2,4x4 MIMO radio
- HT20/HT40 support
- A-MPDU and A-MSDU frame aggregation

802.11ac

- 5.150-5.350, 5.470 - 5.850 GHz operating frequency
- 802.11ac modulation (256-QAM)
- Rates: VHT_MCS0 - MCS9, (6.5-3467 Mbps), NSS = 1-4
- 1x1, 2x2,4x4 MIMO radio
- VHT20/VHT40/VHT80 support
- TxBF (transmit beamforming)

802.11ax

- 5.150-5.350, 5.470 - 5.850 GHz operating frequency
- 802.11ax modulation (1024-QAM)
- Dual-band OFDMA
- Rates (Mbps): HE0-HE1 (8 Mbps - 1200 Mbps), NSS = 1-2
- 1x1, 2x2,4x4 MIMO radio
- VHT20/VHT40/VHT80/VHT160 support
- TxBF (transmit beamforming)

802.11ax (for 5 GHz sensor)

- 2.4-2.48, 5.150-5.350, 5.470 - 5.850 GHz operating frequency
- 802.11ax modulation (1024-QAM)
- Dual-band OFDMA
- Rates (Mbps): HE_MCS0-11 (8 Mbps - 1200 Mbps), NSS = 1-4

- 1x1, 2x2,4x4 MIMO radio
- I VHT20/VHT40/VHT80/VHT160 support
- TxBF (Transmit beamforming)

Transmit Power and Sensitivity Specifications

Output power may be limited by regulatory requirements.

2.4 G: Reviewers -
Tolerance +2/-2 dB @25°C

Mode	Data Rate	Power	Unit
11b	1,2,5.5,11	18	dBm
11g	54 Mbps	15	dBm
	48 Mbps	16	dBm
	36 Mbps	17	dBm
	6 Mbps	18	dBm
HE20	MCS 0,1,2	18	dBm
	MCS 3	17	dBm
	MCS 4, 5	16	dBm
	MCS 6,7	15	dBm
	MCS 8,9	14	dBm
	MCS 10,11	12	dBm
2.4 G Sensitivity			
11b	1 Mbps	-99	dB
	11 Mbps	-90	dB
11g	6 Mpbs	-96	dB
	36 Mpbs	-84	dB
	48 Mbps	-80	dB
	54 Mbps	-78	dB
HE20	MCS 0	-95	dB
	MCS 1	-91	dB
	MCS 2	-89	dB
	MCS 3	-86	dB
	MCS 4	-83	dB
	MCS 5	-79	dB
	MCS 6	-77	dB
	MCS 7	-76	dB
	MCS 8	-72	dB
	MCS 9	-70	dB
	MCS 10	-67	dB
	MCS 11	-64	dB

5 G:
Tolerance +2/-2 dB @25°C

Mode	Data Rate	Power	Unit
11a	54 Mbps	18	dBm
	48 Mbps	18	dBm
	36 Mbps	19	dBm
	6 Mbps	20	dBm
HE20	MCS 0,1,2	20	dBm
	MCS 3,4	19	dBm
	MCS 5,6	18	dBm
	MCS 7,8	17	dBm
	MCS 9	16	dBm
	MCS 10	15	dBm
	MCS 11	14	dBm
HE40	MCS 0,1,2	19	dBm
	MCS 3,4,5	18	dBm
	MCS 6,7,8	17	dBm
	MCS 9	16	dBm
	MCS 10	15	dBm
	MCS 11	14	dBm
HE80	MCS 0,1,2	19	dBm
	MCS 3,4,5	18	dBm
	MCS 6,7,8	17	dBm
	MCS 9	16	dBm
	MCS 10	15	dBm
	MCS 11	14	dBm
HE160	MCS 0,1,2	19	dBm
	MCS 3,4,5	18	dBm
	MCS 6,7,8	17	dBm
	MCS 9	16	dBm
	MCS 10	15	dBm
	MCS 11	14	dBm
5 G Sensitivity			
11a	6 Mbps	-94	db
	36 Mbps	-83	db
	48 Mbps	-79	db
	54 Mbps	-77	db
HE20	MCS 0	-94	db
	MCS 1	-91	db
	MCS 2	-88	db
	MCS 3	-86	db

Mode	Data Rate	Power	Unit
	MCS 4	-82	db
	MCS 5	-78	db
	MCS 6	-77	db
	MCS 7	-75	db
	MCS 8	-71	db
	MCS 9	-69	db
	MCS 10	-66	db
	MCS 11	-63	db
HE40	MCS 0	-92	db
	MCS 1	-88	db
	MCS 2	-86	db
	MCS 3	-83	db
	MCS 4	-80	db
	MCS 5	-76	db
	MCS 6	-74	db
	MCS 7	-73	db
	MCS 8	-69	db
	MCS 9	-67	db
	MCS 10	-63	db
	MCS 11	-60	db
HE80	MCS 0	-88	db
	MCS 1	-85	db
	MCS 2	-83	db
	MCS 3	-80	db
	MCS 4	-77	db
	MCS 5	-73	db
	MCS 6	-71	db
	MCS 7	-69	db
	MCS 8	-66	db
	MCS 9	-64	db
	MCS 10	-60	db
	MCS 11	-57	db
HE160	MCS 0	-85	db
	MCS 1	-82	db
	MCS 2	-80	db
	MCS 3	-77	db
	MCS 4	-74	db
	MCS 5	-70	db

Mode	Data Rate	Power	Unit
	MCS 6	-68	db
	MCS 7	-66	db
	MCS 8	-63	db
	MCS 9	-61	db
	MCS 10	-57	db
	MCS 11	-54	db

Device Specifications

- Chassis dimensions: 9.4" W 9.4.1" H 2.9" D (237.6 mm x 237.6 mm x 57 mm)
- Weight: 4 pounds (1 .8 kilograms)
- Four dual-band internal WiFi antennas and one BLE internal antenna
- Eth0 Ethernet port: autosensing 10/100/1000Base-T/TX Mbps, with 802.3at-compliant PoE
- Eth1 Ethernet port: autosensing 10/100/1000Base-T/TX Mbps

Antennas

- 3 integrated single-band 5.1-5.8 GHz omnidirectional antennas
- 4 integrated dual band 2.4-1.5 GHz and 5.1-5.8 GHz omnidirectional antennas

Antenna Gain

AP460C:

Software Mode	2x2 Radio	4x4 Radio	Scanner	IoT Radio	Azimuth Beamwidth	Elevation Beamwidth
Dual band	2.4 GHz 3.24 dBi	5 GHz 4.21 dBi	2.4 GHz 3.74 dBi/ 5 GHz 3.42 dBi	3.2 dBi	360	150
Dual 5G	5 GHz 3.56 dBi	5 GHz 4.21 dBi	2.4 GHz 3.74 dBi/ 5 GHz 3.42 dBi	3,2 dBi	360	150

Antenna Plots

The antenna plots for the AP460C are available below. The Ethernet port location is noted on each chart.

Antenna 1

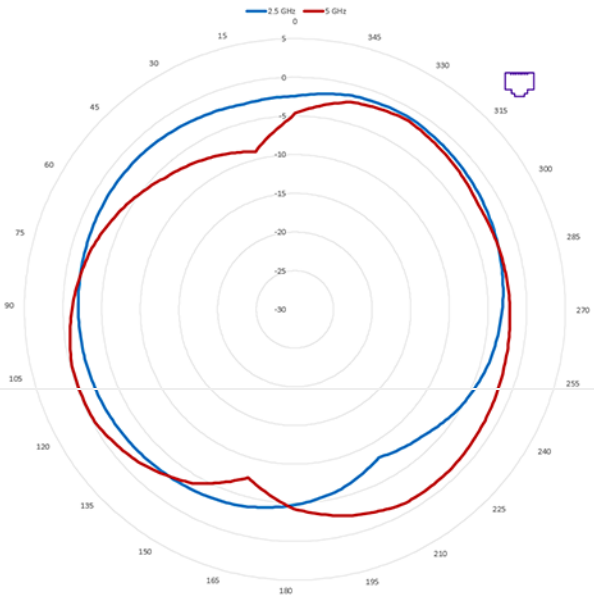

Antenna 2

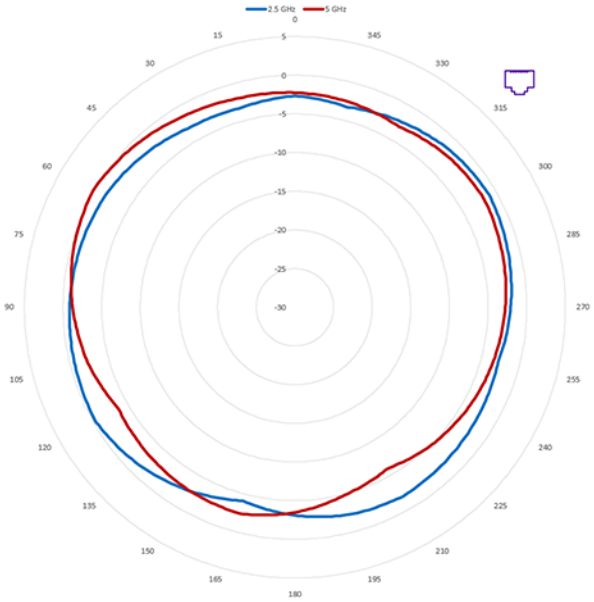

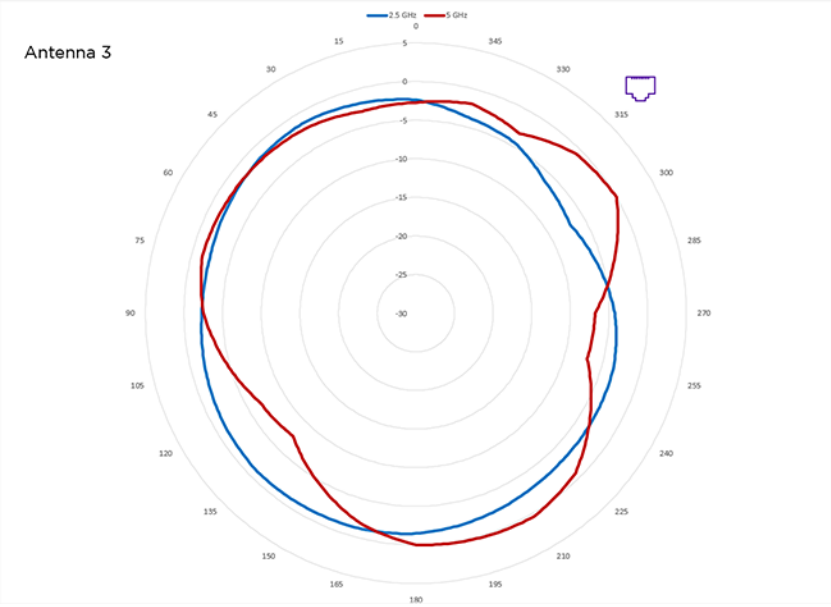
2.5 GHz
5 GHz
Antenna 3
0
15
30
45
60
75
90
105
120
135
150
165
180
195
210
225
240
255
270
285
300
315
330
345
5
0
-5
-10
-15
-20
-25
-30

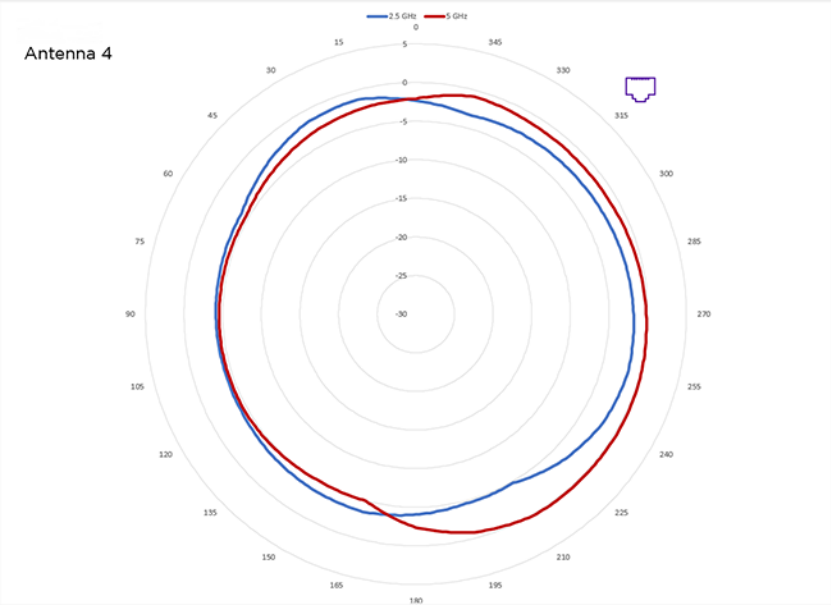
2.5 GHz
5 GHz
Antenna 4
0
15
30
45
60
75
90
105
120
135
150
165
180
195
210
225
240
255
270
285
300
315
330
345
5
0
-5
-10
-15
-20
-25
-30

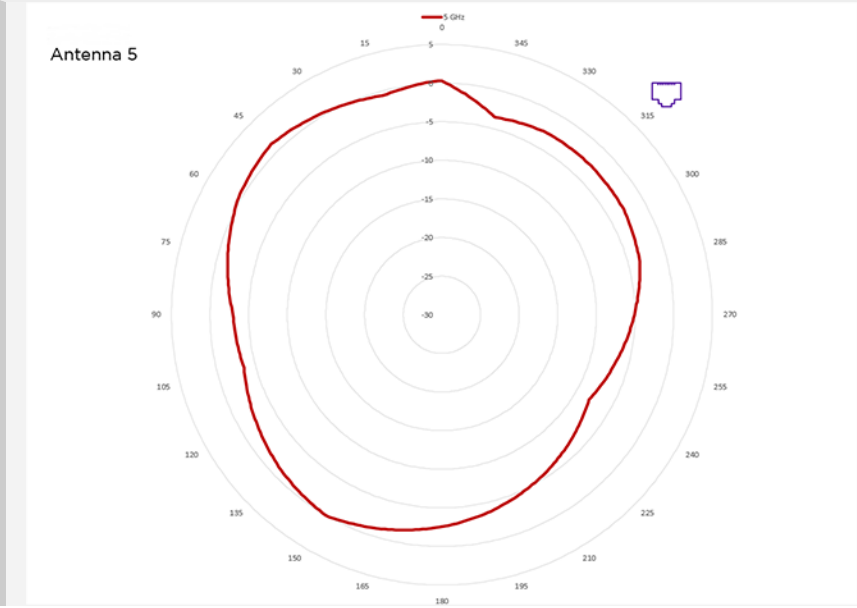
Antenna 5
5 GHz
0
15
345
30
330
45
315
60
300
75
285
90
270
105
255
120
240
135
225
150
210
165
195
180
5
0
-5
-10
-15
-20
-25
-30

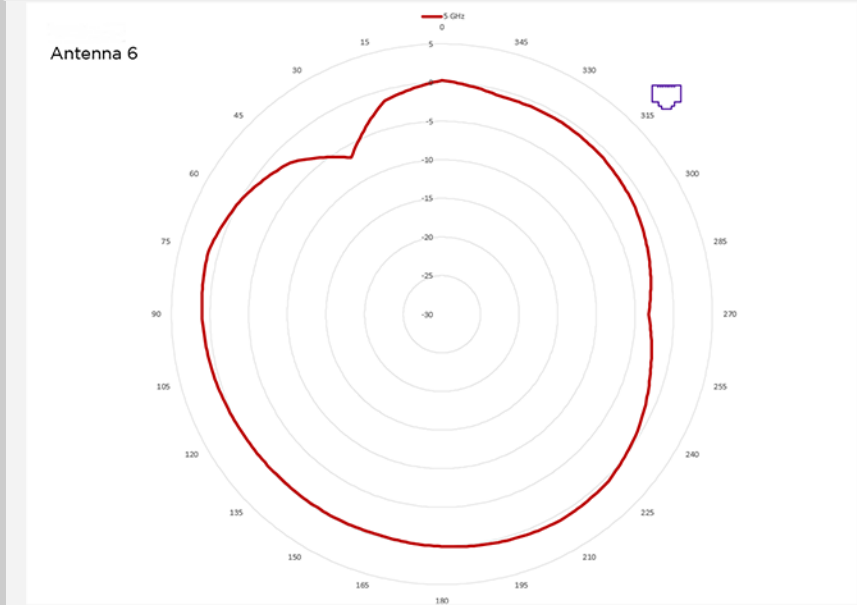
Antenna 6
5 GHz
0
15
345
30
330
45
315
60
300
75
285
90
270
105
255
120
240
135
225
150
210
165
195
180
5
0
-5
-10
-15
-20
-25
-30

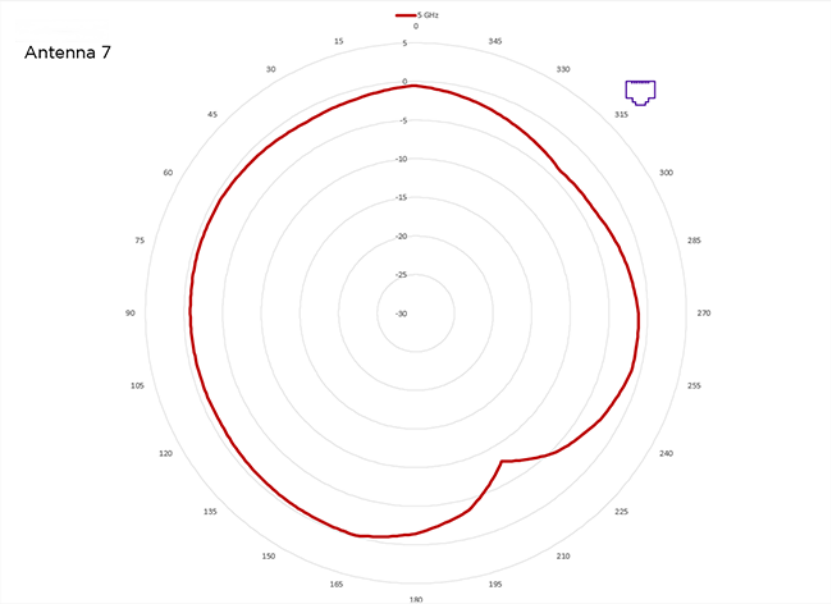

Power Specifications

- IEEE 802.3af PoE (Power over Ethernet)

Power Options

- Power draw w/o USB: typical 19.2 W, maximum 20.8 W
- 802.3at PoE capable Gigabit Ethernet port (RJ45 power input pins: wires 4, 5, 7, 8 or 1, 2, 3, 6)
- 802.3af and 802.3at PoE injector

PoE input:

Typical:

- 54V DC, 0.40A 21.7W Max. PoE with USB 2.5W (IEEE 802.3at only 42.5-57VDC, USB 0.5A)
- 54V DC, 0.45A 19.2W Max. PoE without USB (IEEE 802.3af 37-42.5VDC)

Maximum:

- 54V DC, 0.43A 23.3W Max. PoE with USB 2.5W (IEEE 802.3at only 42.5-57VDC, USB 0.5A)
- 42.5V DC, 0.49A 20.8W Max. PoE without USB (IEEE 802.3af 37-42.5VDC)

- **ESD Protection**: 8 kV contact discharge / 15 kV air discharge

Power Profile

AP460C	802.3af	802.3at
2.4 G Radio	2x2 (14 dBm)	2x2 (18 dbm)
5 G Radio	2x2 (17 dBm)	4x4 (18 dBm)
Sensor Radio	2.4 G and 5 G (15 dBm)	2.4 G and 5 G (18 dBm)
BLE	Enabled	Enabled
USB	No	Yes
2.5 G Ethernet	Yes	Yes
1 G Ethernet	No	Yes

Environmental Specifications

- Operating temperature: -40° to 131° F (-40° to 55° C)
- Storage temperature: -40° to 158° F (-40° to 70° C)
- Relative Humidity: 0 to 95% RH (noncondensing)
- Environmental discharge: +/- 8KV contact and +/- 15 KV air
- Housing: IP67 rated outdoor use

Regulatory Compliance Statements

The regulatory compliance statements in this section apply to Extreme Networks AP460C devices.

Japan Indoor Use

For Japan, the AP460C is restricted for indoor use in the 5150-5350 MHz band only.

Japan Equipment VCCI-B Statement

この装置は，クラスB情報技術装置です。この装置は，家庭環境で使用することを目的としていますが，この装置がラジオやテレビジョン受信機に近接して使用されると，受信障害を引き起こすことがあります。
取扱説明書に従って正しい取り扱いをして下さい。 VCCI－B

Compliance Statement - Europe

EU Declaration of Conformity
View full CE Declaration of Compliance and this information online at www.aerohive.com/support/regulatory-compliance
Extreme Networks, Inc. declares that this device complies with the essential requirements of the Radio Eqiupment Directive 2014/53/EU.

- **Bulgarian [български]:** [Extreme Networks] С настоящото [Extreme Networks] декларира, че този тип радиосъоръжение [AP460C] е в съответствие с Директива 2014/53/EU.
- **Croatian [hrvatski]**: [Extreme Networks] ovime izjavljuje da je radijska oprema tipa [AP460C] u skladu s Direktivom 2014/53/EU.
- **Czech [Česky]:** [Extreme Networks] Tímto [jméno výrobce] prohlašuje, že typ rádiového zařízení [AP460C] je v souladu se směrnicí 2014/53/EU.
- **Danish [Dansk]**: Hermed erklærer [Extreme Networks], at radioudstyrstypen [AP460C] er i overensstemmelse med direktiv 2014/53/EU.
- **Dutch [Nederland]**Hierbij verklaar ik, [Extreme Networks], dat het type radioapparatuur [AP460C] conform is met Richtlijn 2014/53/EU.
- **English**: Hereby, [Extreme Networks], declares that this [[[[Undefined variable Primary.AP640]]]] is in compliance with the essential requirements and other relevant provisions of Directive 2014/53/EU.
- **Estonian [Eesti]**: Käesolevaga deklareerib [Extreme Networks], et käesolev raadioseadme tüüp [AP460C] vastab direktiivi 2014/53/EL nõuetele.
- **Finnish [Suomi]**: [Extreme Networks] vakuuttaa, että radiolaitetyyppi [AP460C] on direktiivin 2014/53/EU mukainen..
- **French [Français]**: Le soussigné, [Extreme Networks], déclare que l'équipement radioélectrique du type [AP460C] est conforme à la directive 2014/53/UE.
- **German [Deutsch]**: Hiermit erklärt [Extreme Networks], dass der Funkanlagentyp [AP460C] der Richtlinie 2014/53/EU entspricht.
- **Greek [Ελληνική]**: ΜΕ ΤΗΝ ΠΑΡΟΥΣΑ [Extreme Networks] ΔΗΛΩΝΕΙ ΟΤΙ [AP460C] ΣΥΜΜΟΡΦΩΝΕΤΑΙ ΠΡΟΣ ΤΙΣ ΟΥΣΙΩΔΕΙΣ ΑΠΑΙΤΗΣΕΙΣ ΚΑΙ ΤΙΣ ΛΟΙΠΕΣ ΣΧΕΤΙΚΕΣ ΔΙΑΤΑΞΕΙΣ ΤΗΣ ΟΔΗΓΙΑΣ 2014/53/EU.
- **Hungarian [Magyar]**: [Extreme Networks] igazolja, hogy a [AP460C] típusú rádióberendezés megfelel a 2014/53/EU irányelvnek.
- **Italian [Italiano]**: Il fabbricante, [Extreme Networks], dichiara che il tipo di apparecchiatura radio [AP460C] è conforme alla direttiva 2014/53/UE.
- **Latvian [Latviski]**: Ar šo [Extreme Networkss] deklarē, ka radioiekārta [AP460C] atbilst Direktīvai 2014/53/ES.
- **Lithuanian [Lietuvių]**: Aš, [Extreme Networks], patvirtinu, kad radijo įrenginių tipas [AP460Cs] atitinka Direktyvą 2014/53/ES.
- **Maltese [Malti]**: B'dan, [Extreme Networks], niddikjara li dan it-tip ta' tagħmir tar-radju [AP460C] huwa konformi mad-Direttiva 2014/53/UE.
- **Polish [Polski]**: [Extreme Networks] niniejszym oświadcza, że typ urządzenia radiowego [AP460C] jest zgodny z dyrektywą 2014/53/UE.

- **Portuguese [Português]**: O(a) abaixo assinado(a) [Extreme Networks] declara que o presente tipo de equipamento de rádio [AP460C] está em conformidade com a Diretiva 2014/53/UE.
- **Romanian [Romania]**: Prin prezenta, [Extreme Networks] declară că tipul de echipamente radio [AP460C] este în conformitate cu Directiva 2014/53/UE.
- **Slovak [Slovensky]**: [Extreme Networks] týmto vyhlasuje, že rádiové zariadenie typu [AP460C] je v súlade so smernicou 2014/53/EÚ.
- **Slovenian [Slovenija]**: [Extreme Networks] potrjuje, da je tip radijske opreme [AP460C] skladen z Direktivo 2014/53/EU.
- **Spanish [Español]**: Por la presente, [Extreme Networks] declara que el tipo de equipo radioeléctrico [AP460C] es conforme con la Directiva 2014/53/UE.
- **Swedish [Sverige]**: Härmed försäkrar [Extreme Networks] att denna typ av radioutrustning [AP460C] överensstämmer med direktiv 2014/53/EU.

Radio Specifications

Bluetooth BLE Beacon

- 2402 - 2480 MHz
- Frequency Hopping Spread-Spectrum (FHSS)

USA, Canada, and Taiwan Radio Frequency Bands

a. USA

- 802.11b/g/n/ac: 2.4 GHz band: 2400-2483 MHz
- 802.11a/n/ac/ax: 5 GHz band: 5150-5350, 5470-5850 MHz
- BLE: 2402-2480 MHz

b. Canada

- 802.11b/g/n/ac: 2.4 GHz band: 2400-2483 MHz
- Indoor: 802.11a/n/ac/ax: 5 GHz band: 5150-5350, 5470-5600, 5650-5850 MHz
- I Outdoor: 802.11a/n/ac/ax: 5 GHz band: 5250-5350, 5470-5600, 5650-5850 MHz
- BLE: 2402-2480 MHz

c. Taiwan

- I802.11b/g/n/ac: 2.4 GHz band: 2412-2462 MHz
- I802.11a/n/ac/ax: 5 GHz band: 5180-5320, 5500-5825 MHz
- I BLE: 2412-2462 MHz

EU Radio Frequency and Power Levels

This product supports the following radio frequencies and power levels in the EU version:

- 802.11b/g/n/ac, 2.4 GHz band: 2400-2483 MHz EIRP<20 dBm
- 802.11a/ac/n/ax: 5 GHz band: 5150-5350 MHz EIRP<23 dBm (indoor only), 5470-5850 MHz EIRP<30 dBm, 5725-5850 MHz<14 dBm
- BLE: 2402-2480 MHz EIRP<8 dBm

Bulgarian [български]: Този продукт поддържа следните радиочестоти и нива на мощност във версията на ЕС:

- 802.11b/g/n/ac, 2.4 GHz band: 2400-2483 MHz EIRP<20 dBm
- 802.11a/ac/n/ax: 5 GHz band: 5150-5350 MHz EIRP<23 dBm (indoor only), 5470-5850 MHz EIRP<30 dBm, 5725-5850 MHz<14 dBm
- BLE: 2402-2480 MHz EIRP<8 dBm

Croatian [hrvatski]: Ovaj proizvod podržava sljedeće radijske frekvencije i razinu snage u verziji EU:

- 802.11b/g/n/ac, 2.4 GHz band: 2400-2483 MHz EIRP<20 dBm
- 802.11a/ac/n/ax: 5 GHz band: 5150-5350 MHz EIRP<23 dBm, 5470-5850 MHz EIRP<30 dBm, 5725-5850 MHz<14 dBm
- BLE: 2402-2480 MHz EIRP<8 dBm

Česky [Czech]: [Tento produkt podporuje následující rádiové frekvence a úrovně výkonu ve verzi EU:

- 802.11b/g/n/ac, 2.4 GHz band: 2400-2483 MHz EIRP<20 dBm
- 802.11a/ac/n/ax: 5 GHz band: 5150-5350 MHz EIRP<23 dBm, 5470-5850 MHz EIRP<30 dBm, 5725-5850 MHz<14 dBm
- BLE: 2402-2480 MHz EIRP<8 dBm

Danish [Dansk]: Dette produkt understøtter følgende radiofrekvenser og strømniveauer i EU-versionen:

- 802.11b/g/n/ac, 2.4 GHz band: 2400-2483 MHz EIRP<20 dBm
- 802.11a/ac/n/ax: 5 GHz band: 5150-5350 MHz EIRP<23 dBm, 5470-5850 MHz EIRP<30 dBm, 5725-5850 MHz<14 dBm
- BLE: 2402-2480 MHz EIRP<8 dBm

Dutch [Nederland]: Dit product ondersteunt de volgende radiofrequenties en vermogensniveaus in de EU-versie:

- 802.11b/g/n/ac, 2.4 GHz band: 2400-2483 MHz EIRP<20 dBm
- 802.11a/ac/n/ax: 5 GHz band: 5150-5350 MHz EIRP<23 dBm, 5470-5850 MHz EIRP<30 dBm, 5725-5850 MHz<14 dBm
- BLE: 2402-2480 MHz EIRP<8 dBm

English: This product supports the following radio frequencies and power levels in the EU version:

- 802.11b/g/n/ac, 2.4 GHz band: 2400-2483 MHz EIRP<20 dBm
- 802.11a/ac/n/ax: 5 GHz band: 5150-5350 MHz EIRP<23 dBm (indoor only), 5470-5850 MHz EIRP<30 dBm, 5725-5850 MHz<14 dBm
- BLE: 2402-2480 MHz EIRP<8 dBm

Estonian [Eesti]: See toode toetab järgmisi raadiosagedusi ja võimsuse taseme ELis versioon:

- 802.11b/g/n/ac, 2.4 GHz band: 2400-2483 MHz EIRP<20 dBm
- 802.11a/ac/n/ax: 5 GHz band: 5150-5350 MHz EIRP<23 dBm (indoor only), 5470-5850 MHz EIRP<30 dBm, 5725-5850 MHz<14 dBm
- BLE: 2402-2480 MHz EIRP<8 dBm

Finnish [Suomi]: Tämä tuote tukee seuraavia radiotaajuuksia ja tehoja EU-versiossa:

- 802.11a/b/g/n, 2.4 GHz band: 2412-2472 MHz EIRP<20 dBm
- 802.11 a/ac/n/ax: 5 GHz band: 5150-5350 MHz EIRP<23 dBm, 5500-5720 MHz EIRP<30 dBm
- BLE: 2402-2480 MHz EIRP<8 dBm

French [Français]: Ce produit prend en charge les fréquences radio et les niveaux de puissance suivants dans la version EU:

- 802.11b/g/n/ac, 2.4 GHz band: 2400-2483 MHz EIRP<20 dBm
- 802.11a/ac/n/ax: 5 GHz band: 5150-5350 MHz EIRP<23 dBm, 5470-5850 MHz EIRP<30 dBm, 5725-5850 MHz<14 dBm
- BLE: 2402-2480 MHz EIRP<8 dBm

German [Deutsch]: Dieses Produkt unterstützt die folgenden Funkfrequenzen und Leistungsstufen in der EU-Version:

- 802.11b/g/n/ac, 2.4 GHz band: 2400-2483 MHz EIRP<20 dBm
- 802.11a/ac/n/ax: 5 GHz band: 5150-5350 MHz EIRP<23 dBm, 5470-5850 MHz EIRP<30 dBm, 5725-5850 MHz<14 dBm
- BLE: 2402-2480 MHz EIRP<8 dBm

Greek [Ελληνική] Αυτό το προϊόν υποστηρίζει τις ακόλουθες ραδιοσυχνότητες και επίπεδα ισχύος στην έκδοση της ΕΕ:

- 802.11b/g/n/ac, 2.4 GHz band: 2400-2483 MHz EIRP<20 dBm
- 802.11a/ac/n/ax: 5 GHz band: 5150-5350 MHz EIRP<23 dBm, 5470-5850 MHz EIRP<30 dBm, 5725-5850 MHz<14 dBm
- BLE: 2402-2480 MHz EIRP<8 dBm

Hungarian [Magyar]: Ez a termék a következő rádiófrekvenciákat és teljesítményszinteket támogatja az EU verziójában :

- 802.11b/g/n/ac, 2.4 GHz band: 2412-2472 MHz EIRP<20 dBm
- 802.11 a/ac/n/ax: 5 GHz band: 5150-5350 MHz EIRP<23 dBm, 5500-5720 MHz EIRP<30 dBm
- BLE: 2402-2480 MHz EIRP<8 dBm

Italian [Italiano]: Questo prodotto supporta le seguenti frequenze radio e livelli di potenza nella versione UE:

- 802.11b/g/n/ac, 2.4 GHz band: 2400-2483 MHz EIRP<20 dBm
- 802.11a/ac/n/ax: 5 GHz band: 5150-5350 MHz EIRP<23 dBm, 5470-5850 MHz EIRP<30 dBm, 5725-5850 MHz<14 dBm
- BLE: 2402-2480 MHz EIRP<8 dBm

Latvian [Latviski]: Šis produkts atbalsta šādus radio frekvences un jaudas līmeni ES versiju:

- 802.11b/g/n/ac, 2.4 GHz band: 2400-2483 MHz EIRP<20 dBm
- 802.11a/ac/n/ax: 5 GHz band: 5150-5350 MHz EIRP<23 dBm, 5470-5850 MHz EIRP<30 dBm, 5725-5850 MHz<14 dBm
- BLE: 2402-2480 MHz EIRP<8 dBm

Lithuanian [Lietuvių]: Šis produktas palaiko šiuos radijo dažnius ir galios lygį ES versija:

- 802.11b/g/n/ac, 2.4 GHz band: 2412-2472 MHz EIRP<20 dBm
- 802.11 a/ac/n/ax: 5 GHz band: 5150-5350 MHz EIRP<23 dBm, 5500-5720 MHz EIRP<30 dBm

- BLE: 2402-2480 MHz EIRP<8 dBm

Maltese [Malti]: Dan il-prodott jappoġġja l-frekwenzi tar-radju li ġejjin u l-livelli ta 'enerġija fil-verżjoni UE:

- 802.11b/g/n/ac, 2.4 GHz band: 2400-2483 MHz EIRP<20 dBm
- 802.11a/ac/n/ax: 5 GHz band: 5150-5350 MHz EIRP<23 dBm, 5470-5850 MHz EIRP<30 dBm, 5725-5850 MHz<14 dBm
- BLE: 2402-2480 MHz EIRP<8 dBm

Pollish [Polski]: Ten produkt obsługuje następujące częstotliwości radiowe i poziomy mocy w wersji unijnej:

- 802.11b/g/n/ac, 2.4 GHz band: 2400-2483 MHz EIRP<20 dBm
- 802.11a/ac/n/ax: 5 GHz band: 5150-5350 MHz EIRP<23 dBm, 5470-5850 MHz EIRP<30 dBm, 5725-5850 MHz<14 dBm
- BLE: 2402-2480 MHz EIRP<8 dBm

Portuguese [Português]: Este produto suporta as seguintes frequências de rádio e níveis de potência na versão UE:

- 802.11b/g/n/ac, 2.4 GHz band: 2400-2483 MHz EIRP<20 dBm
- 802.11a/ac/n/ax : 5 GHz band: 5150-5350 MHz EIRP<23 dBm, 5470-5850 MHz EIRP<30 dBm, 5725-5850 MHz<14 dBm
- BLE: 2402-2480 MHz EIRP<8 dBm

Romanian [Romania]: This product supports the following radio frequencies and power levels in the EU version

- 802.11b/g/n/ac, 2.4 GHz band: 2400-2483 MHz EIRP<20 dBm
- 802.11a/ac/n/ax: 5 GHz band: 5150-5350 MHz EIRP<23 dBm, 5470-5850 MHz EIRP<30 dBm, 5725-5850 MHz<14 dBm
- BLE: 2402-2480 MHz EIRP<8 dBm

Slovak [Slovensky]:Tento produkt podporuje nasledujúce rádiové frekvencie a úrovne napájania vo verzii EÚ:

- 802.11b/g/n/ac, 2.4 GHz band: 2400-2483 MHz EIRP<20 dBm
- 802.11a/ac/n/ax: 5 GHz band: 5150-5350 MHz EIRP<23 dBm, 5470-5850 MHz EIRP<30 dBm, 5725-5850 MHz<14 dBm
- BLE: 2402-2480 MHz EIRP<8 dBm

Slovenian [Slovenija]: Ta izdelek podpira te radijske frekvence in ravni moči v različici EU:

- 802.11b/g/n/ac, 2.4 GHz band: 2412-2472 MHz EIRP<20 dBm
- 802.11 a/ac/n/ax: 5 GHz band: 5150-5350 MHz EIRP<23 dBm, 5500-5720 MHz EIRP<30 dBm
- BLE: 2402-2480 MHz EIRP<8 dBm

Spanish [Español]: Este producto admite las siguientes frecuencias de radio y niveles de potencia en la versión de la UE:

- 802.11b/g/n/ac, 2.4 GHz band: 2400-2483 MHz EIRP<20 dBm
- 802.11a/ac/n/ax: 5 GHz band: 5150-5350 MHz EIRP<23 dBm, 5470-5850 MHz EIRP<30 dBm, 5725-5850 MHz<14 dBm
- BLE: 2402-2480 MHz EIRP<8 dBm

Swedish [Sverige]: Denna produkt stöder följande radiofrekvenser och effektnivåer i EU-versionen:

- 802.11b/g/n/ac, 2.4 GHz band: 2400-2483 MHz EIRP<20 dBm
- 802.11a/ac/n/ax: 5 GHz band: 5150-5350 MHz EIRP<23 dBm, 5470-5850 MHz EIRP<30 dBm, 5725-5850 MHz<14 dBm
- BLE: 2402-2480 MHz EIRP<8 dBm

UK: This product supports the following radio frequencies and power levels in the EU version:

- 802.11b/g/n/ac, 2.4 GHz band: 2400-2483.5 MHz EIRP<20 dBm
- 802.11a/ac/n/ax: 5 GHz band: 5150-5350 MHz EIRP<23 dBm (indoor only), 5500-5730 MHz EIRP<30 dBm, 5730-5850 MHz<23dBm (indoor only)
- BLE: 2402-2480 MHz EIRP<8 dBm

EU Radiation Warning Statement

AT	BE	BG	CH	CY	CZ	DE	DK	EE	EL	ES
FI	FR	HR	HU	IE	IS	IT	LI	LT	LU	LV
MT	NL	NO	PL	PT	RO	SE	SI	SK	TR	UK

To meet radiation exposure requirements, these devices should be installed at a minimum distance of 12" (30 cm) from people or animals.

Restrictions: 5150-5350 MHz for indoor use only.
Bulgarian [български]: За да отговарят на изискванията за излагане на радиация, тези устройства трябва да бъдат инсталирани на минимално разстояние от 20 см от хората или животните.
Ограничения: 5150-5350 MHz само за вътрешна употреба.
Croatian [hrvatski]: Da bi zadovoljili zahtjeve izloženosti zračenju, ti uređaji trebaju biti instalirani na minimalnoj udaljenosti od 20 cm od ljudi ili život-inja.
Ograničenja: 5150-5350 MHz samo za unutarnju uporabu.
Czech [Česky]: Aby byly splněny požadavky na ozáření, měly by být tato zařízení instalována v minimální vzdálenosti 20 cm od lidí nebo zvířat. Omezení: 5150-5350 MHz pouze pro vnitřní použití.
Danish [Dansk]: For at opfylde kravene til strålingseksponering skal disse enheder installeres i mindst 20 cm afstand fra mennesker eller dyr.
Restriktioner: 5150-5350 MHz kun til indendørs brug.
Dutch [Nederland]: Om aan stralingsblootstelling te voldoen, dienen deze apparaten op een minimumafstand van 20 cm van mensen of dieren te worden geïnstalleerd.
Beperkingen: 5150-5350 MHz alleen voor gebruik binnenshuis.
English: To meet radiation exposure requirements, these devices should be installed at a minimum distance of 20 cm from people or animals.
Restrictions: 5150-5350 MHz for indoor use only.
Estonian [Eesti]: Et rahuldada kiirituse nõuetele, need seadmed tuleb paigaldada minimaalselt 20 cm inimestelt või loomadelt.
Piirangud: 5150-5350 MHz sisetingimustele.
Finnish [Suomi]: Säteilytysvaatimusten täyttämiseksi nämä laitteet on asennettava vähintään 20 cm etäisyydelle ihmisistä tai eläimistä.
Rajoitukset: 5150-5350 MHz vain sisäkäyttöön.
French [Français]: Pour répondre aux exigences d'exposition aux rayonnements, ces appareils devraient être installés à une distance minimale de 20 cm des personnes ou des animaux.
Restrictions: 5150-5350 MHz pour usage intérieur seulement.
German [Deutsch]: Um die Anforderungen an die Strahlenbelastung zu erfüllen, sollten diese Geräte in einem Abstand von 20 cm von Per-sonen oder Tieren installiert werden.
Einschränkungen: 5150-5350 MHz nur für den Innenbereich.
Greek [Ελληνική]: Για την κάλυψη των απαιτήσεων έκθεσης σε ακτινοβολία, οι συσκευές αυτές πρέπει να τοποθετούνται σε απόσταση τουλάχιστον 20 cm από ανθρώπους ή ζώα.
Περιορισμοί: 5150-5350 MHz μόνο για εσωτερική χρήση.
Hungarian [Magyar]: A sugárterhelési követelmények teljesítése érdekében ezeket az eszközöket legalább 20 cm távolságra kell felszerelni az emberek vagy az állatoktól.
Korlátozások: 5150-5350 MHz csak beltéri használatra.
Italian [Italiano]: Per soddisfare i requisiti di esposizione alle radiazioni, questi dispositivi devono essere installati ad una distanza minima di 20 cm da persone o animali.
Restrizioni: 5150-5350 MHz solo per uso interno.
Latvian [Latviski]: Lai apmierinātu starojuma iedarbības prasībām, šīs ierīces ir uzstādītas pie minimālo attālumu 20 cm no cilvēkiem vai dzīvniekiem.
Ierobežojumi: 5150-53250 MHz izmantot tikai telpās.
Lithuanian [Lietuvių]: Siekiant patenkinti SPINDULIAVIMĄ reikalavimus, šie įtaisai turi būti įrengiami ne arčiau kaip 20 cm nuo žmonių ar gyvūnų.
Apribojimai: 5150-5350 MHz naudoti tik patalpose.
Maltese [Malti]: Biex jilħqu l-ħtiġiet ta 'espożizzjoni tar-radjazzjoni, dawn il-mezzi għandhom jiġu installati f'distanza minima ta' 20 ċm minn nies jew annimali.
Restrizzjonijiet: MHz 5150-5350 għall-użu fuq ġewwa biss.
Polish [Polski]: Aby spełnić wymagania dotyczące narażenia na promieniowanie, urządzenia te powinny być instalowane w odległości min-imum 20 cm od ludzi lub zwierząt.
Ograniczenia: 5150-5350 MHz tylko do użytku wewnętrznego.
Portuguese [Português]: Para atender aos requisitos de exposição à radiação, esses dispositivos devem ser instalados a uma distância mínima de 20 cm de pessoas ou animais.
Restrições: 5150-5350 MHz para uso interno apenas.
Romanian [Romania]: Pentru a îndeplini cerințele de expunere la radiații, aceste dispozitive ar trebui instalate la o distanță minimă de 20 cm de la oameni sau animale.
Restricții: 5150-5350 MHz numai pentru uz intern.
Slovak [Slovensky]: Ak chcete splniť požiadavky na vystavenie žiareniu, mali by byť tieto zariadenia inštalované v minimálnej vzdialenosti od ľudí alebo zvierat od minimálnej vzdialenosti 20 cm.
Obmedzenia: 5150-5350 MHz iba pre vnútorné použitie.
Slovenian [Slovenija]: Da bi zadovoljili zahteve izpostavljenosti sevanja, morajo biti te naprave nameščene na razdalji najmanj 20 cm iz ljudi ali živali.
Omejitve: 5150-5350 MHz samo za uporabo v zaprtih prostorih.

Spanish [Español]: Para cumplir con los requisitos de exposición a la radiación, estos dispositivos deben instalarse a una distancia mínima de 20 cm de personas o animales.
Restricciones: 5150-5350 MHz sólo para uso en interiores.
Swedish [Sverige]: För att uppfylla kraven på strålningsexponering bör dessa enheter installeras på minst 20 cm från människor eller djur.
Restriktioner: 5150-5350 MHz endast för inomhusbruk.

Federal Communication Commission Interference Statement

This equipment has been tested and found to comply with the limits for a Class B digital device, pursuant to Part 15 of the FCC Rules. These limits are designed to provide reasonable protection against harmful interference in a residential installation. This equipment generates, uses and can radiate radio frequency energy and, if not installed and used in accordance with the instructions, may cause harmful interference to radio communications. However, there is no guarantee that interference will not occur in a particular installation. If this equipment does cause harmful interference to radio or television reception, which can be determined by turning the equipment off and on, the user is encouraged to try to correct the interference by one of the following measures:

- Reorient or relocate the antenna of the receiving devices.
- Increase the separation between this equipment and receiving equipment.
- Connect this equipment into an outlet on a circuit different from that to which the receiving equipment is connected.
- Consult the dealer or an experienced radio or TV technician for help.

FCC Caution: Any changes or modifications not expressly approved by the party responsible for compliance could void the user's authority to operate this equipment.
This device complies with Part 15 of the FCC Rules. Operation is subject to the following two conditions: (1) This device may not cause harmful interference, and (2) this device must accept any interference received, including interference that may cause undesired operation.
IMPORTANT NOTE:
Radiation Exposure Statement:
This equipment complies with FCC radiation exposure limits set forth for an uncontrolled environment. This equipment should be installed and operated with minimum distance of 12" (30 cm) between the radiator and people or animals.
This transmitter must not be co-located or operating in conjunction with any other antenna or transmitter.
Country Code selection feature to be disabled for products marketed to the US/CANADA.

Warning: This is a Class A product. In a domestic environment this product may cause radio interference in which case the user may be required to take adequate measures.

Brazil Statement

Este equipamento não tem direito à proteção contra inteferência prejudicial e não pode causar interferência em sistemas devidamente autorizados.

Mexico Statement

La operación de este equipo está sujeta a las siguientes dos condiciones
(1) es posible que este equipo o dispositivo no cause interferencia perjudicial y
(2) este equipo o dispositivo debe aceptar cualquier interferencia, incluyendo la que pueda causar su operación no deseada.
The operation of this equipment is subject to the following two conditions:
(1) it is possible that this equipment or device does not cause disruptive interference and
(2) this equipment or device must accept any interference, including interference that may cause undesired operation).

Industry Canada Statement:

This device complies with Industry Canada license-exempt RSS standards. Operation is subject to the following two conditions:

- This device may not cause interference, and
- This device must accept any interference, including interference that may cause undesired operation of the device.

Le présent appareil est conforme aux CNR d'Industrie Canada applicables aux appareils radio exempts de licence. L'exploitation est autorisée aux deux conditions suivantes :

- l'appareil ne doit pas produire de brouillage, et
- l'utilisateur de l'appareil doit accepter tout brouillage radioélectrique subi, même si le brouillage est susceptible d'en compromettre le fonctionnement.

Caution:
(i) the device for operation in the band 5150-5250 MHz is only for indoor use to reduce the potential for harmful interference to co-channel mobile satellite systems;
Avertissement:

(i) les dispositifs fonctionnant dans la bande 5150-5250 MHz sont réservés uniquement pour une utilisation à l'intérieur afin de réduire les risques de brouillage préjudiciable aux systèmes de satellites mobiles utilisant les mêmes canaux;

Radiation Exposure Statement:

This equipment complies with IC radiation exposure limits set forth for an uncontrolled environment. This equipment should be installed and operated with minimum distance 35 cm between the radiator and people or animals.

Dclaration d'exposition aux radiations:

Cet équipement est conforme aux limites d'exposition aux rayonnements IC établies pour un environnement non contrôlé. Cet équipement doit être installé et utilisé avec un minimum de 35 cm de distance entre la source de rayonnement et des personnes ou des animaux.

(missing or bad snippet)

Taiwan Compliance Information

Extreme Networks AP460C

第十二條→經型式認證合格之低功率射頻電機，非經許可，公司，商號或使用者均不得擅自變更頻率、加大功率或變更原設計之特性及功能。
第十四條→低功　射頻電機之使用　得影響飛航安全及干擾合法通信；經發現有干擾現象時，應　即停用，並改善至無干擾時方得繼續使用。
前項合法通信，指依電信法規定作業之無線電通信。低功　射頻電機須忍受合法通信或工業、科學及醫　用電波　射性電機設備之干擾。

在 5.25-5.35 秭赫頻帶內操作之無線資訊傳輸設備，限於室內使用。
無線資訊傳設備的製造廠商應確保頻　穩定性，如依製造廠商使用手冊上所述正常操作，發射的信號應維持於操作頻帶中。

Taiwan MPE Warning

電磁波曝露量MPE標準值(MPE) 1mW/cm2，送測產品實值為0.734 mW/cm2
"avoid affecting the operation of nearby radar systems". 應避免影響附近雷達系統之操作
"High-gain directional antennas can only be used in stationary point-to-point systems."高增益指向性天線只得應用於固定式點對點系統。

Copyright © Extreme Networks, Inc. 6480 Via Del Oro, San Jose CA, 95119 USA