Appendix A. Plots of System Performance Check

The plots are shown as follows.

System Check_2450MHz_100625

DUT: Dipole 2450 MHz

Communication System: CW; Frequency: 2450 MHz;Duty Cycle: 1:1
Medium: MSL_2450_100625 Medium parameters used: f = 2450 MHz; σ = 1.93 mho/m; ε_r = 53.6; ρ = 1000 kg/m^3
Ambient Temperature：22.4 °C; Liquid Temperature：21.4 °C

DASY5 Configuration:
- Probe: ET3DV6 - SN1788; ConvF(4.19, 4.19, 4.19); Calibrated: 2009/9/23
- Sensor-Surface: 4mm (Mechanical Surface Detection)
- Electronics: DAE4 Sn778; Calibrated: 2009/9/18
- Phantom: ELI 4.0; Type: QDOVA001BA; Serial: 1029
- Measurement SW: DASY5, V5.0 Build 125; SEMCAD X Version 13.4 Build 125

Pin=100mW/Area Scan (91x91x1): Measurement grid: dx=10mm, dy=10mm
Maximum value of SAR (interpolated) = 5.84 mW/g

Pin=100mW/Zoom Scan (7x7x7)/Cube 0: Measurement grid: dx=5mm, dy=5mm, dz=5mm
Reference Value = 56.2 V/m; Power Drift = -0.00559 dB
Peak SAR (extrapolated) = 11.8 W/kg
SAR(1 g) = 5.06 mW/g; SAR(10 g) = 2.33 mW/g
Maximum value of SAR (measured) = 5.63 mW/g

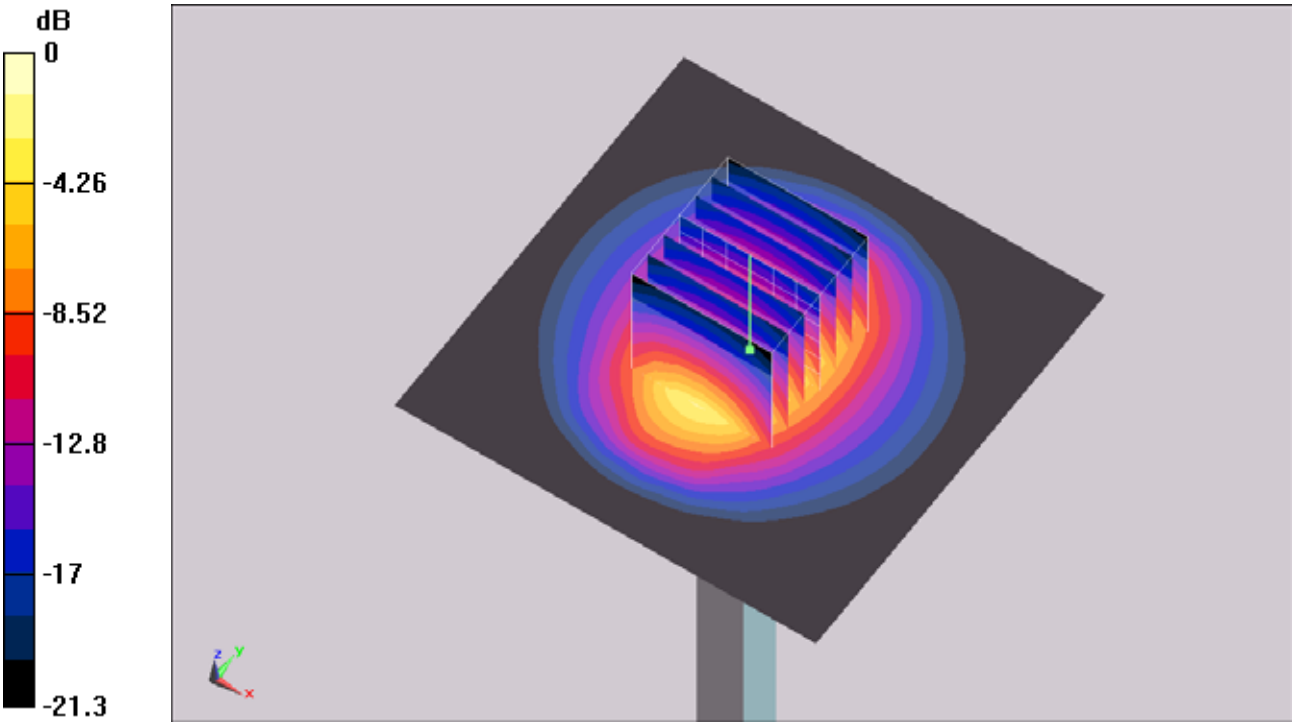

0 dB = 5.63mW/g

System Check_5200MHz_100625

DUT: Dipole 5GHz

Communication System: CW; Frequency: 5200 MHz;Duty Cycle: 1:1
Medium: MSL_5G_100525 Medium parameters used: f = 5200 MHz; σ = 5.26 mho/m; ε_r = 47.5; ρ = 1000 kg/m^3
Ambient Temperature：22.4 °C; Liquid Temperature：21.2 °C

DASY5 Configuration:
- Probe: EX3DV3 - SN3514; ConvF(4.27, 4.27, 4.27); Calibrated: 2010/1/26
- Sensor-Surface: 3mm (Mechanical Surface Detection)
- Electronics: DAE4 Sn778; Calibrated: 2009/9/18
- Phantom: ELI 4.0_Front; Type: QDOVA001BB; Serial: 1026
- Measurement SW: DASY5, V5.0 Build 125; SEMCAD X Version 13.4 Build 125

Pin=100mW/Area Scan (91x91x1): Measurement grid: dx=10mm, dy=10mm
Maximum value of SAR (interpolated) = 13.3 mW/g

Pin=100mW/Zoom Scan (8x8x8)/Cube 0: Measurement grid: dx=4.3mm, dy=4.3mm, dz=3mm
Reference Value = 51.5 V/m; Power Drift = -0.041 dB
Peak SAR (extrapolated) = 27.6 W/kg
SAR(1 g) = 8.04 mW/g; SAR(10 g) = 2.32 mW/g
Maximum value of SAR (measured) = 12 mW/g

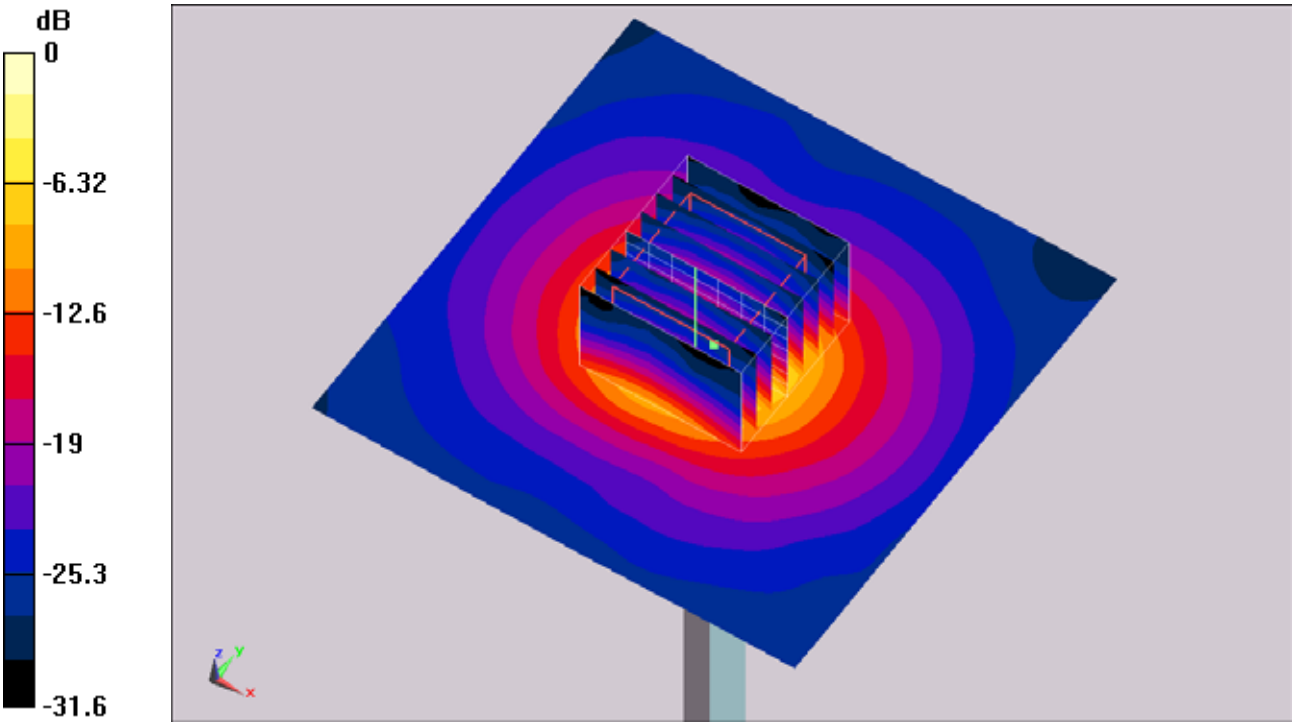

0 dB = 12mW/g

System Check_5200MHz_100626

DUT: Dipole 5GHz

Communication System: CW; Frequency: 5200 MHz;Duty Cycle: 1:1
Medium: MSL_5G_100626 Medium parameters used: f = 5200 MHz; σ = 5.33 mho/m; ε_r = 48.1; ρ = 1000 kg/m^3
Ambient Temperature：22.4 °C; Liquid Temperature：21.2 °C

DASY5 Configuration:
- Probe: EX3DV3 - SN3514; ConvF(4.27, 4.27, 4.27); Calibrated: 2010/1/26
- Sensor-Surface: 2.5mm (Mechanical Surface Detection)
- Electronics: DAE4 Sn778; Calibrated: 2009/9/18
- Phantom: ELI 4.0; Type: QDOVA001BA; Serial: 1029
- Measurement SW: DASY5, V5.0 Build 125; SEMCAD X Version 13.4 Build 125

Pin=100mW/Area Scan (91x91x1): Measurement grid: dx=10mm, dy=10mm
Maximum value of SAR (interpolated) = 12.6 mW/g

Pin=100mW/Zoom Scan (8x8x8)/Cube 0: Measurement grid: dx=4.3mm, dy=4.3mm, dz=3mm
Reference Value = 53 V/m; Power Drift = 0.098 dB
Peak SAR (extrapolated) = 26 W/kg
SAR(1 g) = 7.28 mW/g; SAR(10 g) = 2.04 mW/g
Maximum value of SAR (measured) = 12.3 mW/g

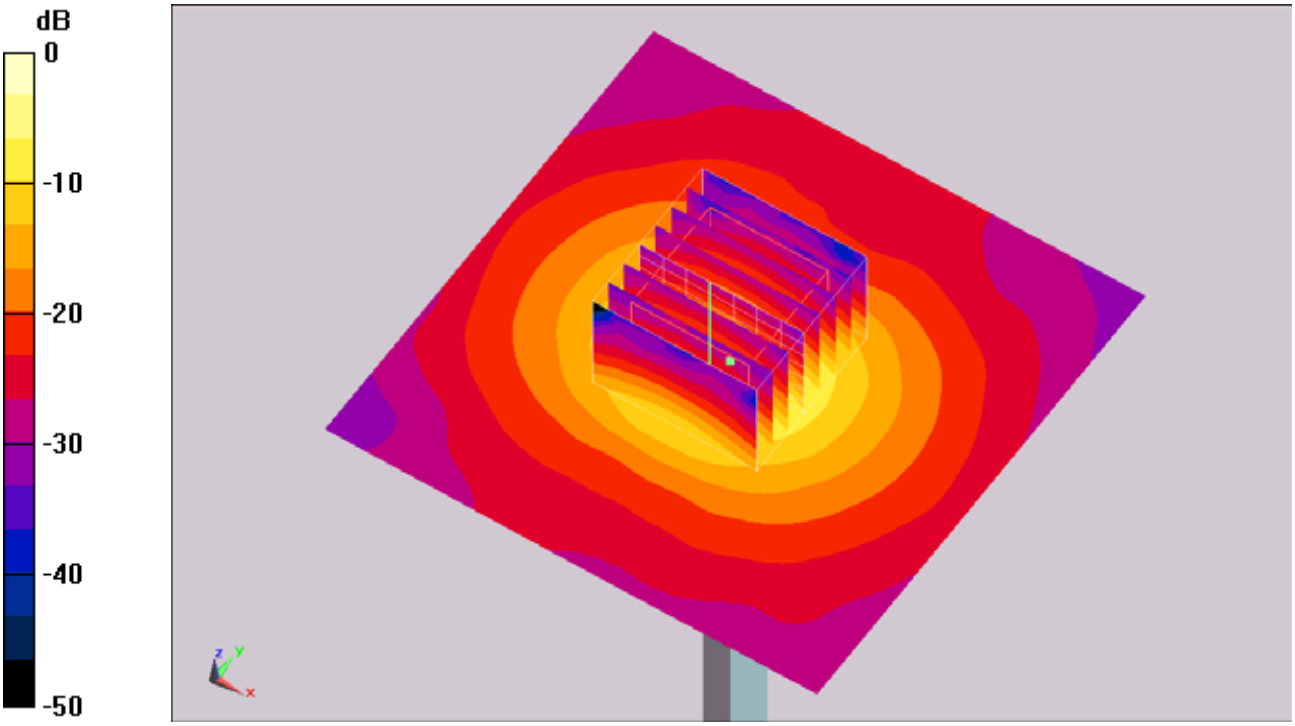

0 dB = 12.3mW/g

System Check_5500MHz_100626

DUT: Dipole 5GHz

Communication System: CW; Frequency: 5500 MHz;Duty Cycle: 1:1
Medium: MSL_5G_100626 Medium parameters used: f = 5350 MHz; σ = 5.54 mho/m; ε_r = 47.7; ρ = 1000 kg/m^3
Ambient Temperature：22.3 °C; Liquid Temperature：21.3 °C

DASY5 Configuration:
- Probe: EX3DV3 - SN3514; ConvF(3.86, 3.86, 3.86); Calibrated: 2010/1/26
- Sensor-Surface: 2.5mm (Mechanical Surface Detection)
- Electronics: DAE4 Sn778; Calibrated: 2009/9/18
- Phantom: ELI 4.0; Type: QDOVA001BA; Serial: 1029
- Measurement SW: DASY5, V5.0 Build 125; SEMCAD X Version 13.4 Build 125

Pin=100mW/Area Scan (91x91x1): Measurement grid: dx=10mm, dy=10mm
Maximum value of SAR (interpolated) = 13.6 mW/g

Pin=100mW/Zoom Scan (8x8x8)/Cube 0: Measurement grid: dx=4.3mm, dy=4.3mm, dz=3mm
Reference Value = 54.7 V/m; Power Drift = 0.065 dB
Peak SAR (extrapolated) = 28.9 W/kg
SAR(1 g) = 7.8 mW/g; SAR(10 g) = 2.19 mW/g
Maximum value of SAR (measured) = 13.1 mW/g

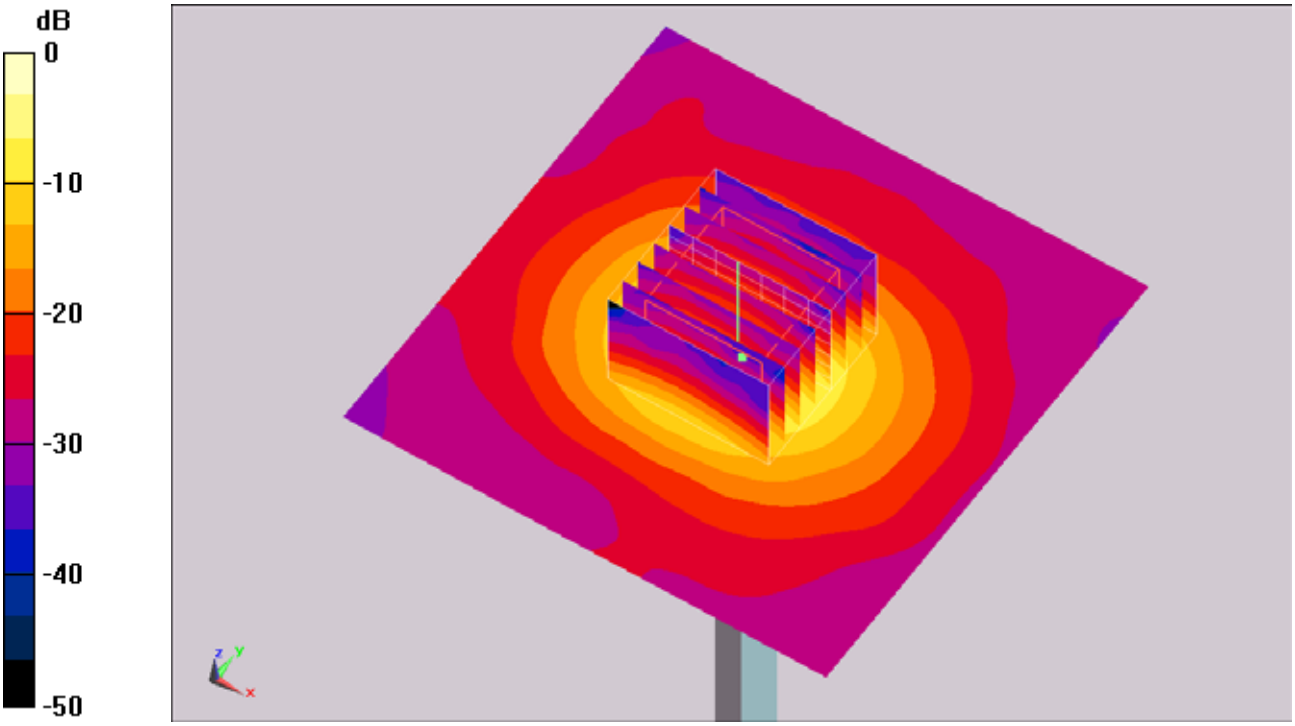

0 dB = 13.1mW/g

System Check_5800MHz_100627

DUT: Dipole 5GHz

Communication System: CW; Frequency: 5500 MHz;Duty Cycle: 1:1
Medium: MSL_5G_100525 Medium parameters used: f = 5500 MHz; σ = 5.65 mho/m; ε_r = 47; ρ = 1000 kg/m^3

Ambient Temperature：22.5 °C; Liquid Temperature：21.2 °C

DASY5 Configuration:
- Probe: EX3DV3 - SN3514; ConvF(3.86, 3.86, 3.86); Calibrated: 2010/1/26
- Sensor-Surface: 2.5mm (Mechanical Surface Detection)
- Electronics: DAE4 Sn778; Calibrated: 2009/9/18
- Phantom: ELI 4.0; Type: QDOVA001BA; Serial: 1029
- Measurement SW: DASY5, V5.0 Build 125; SEMCAD X Version 13.4 Build 125

Pin=100mW/Area Scan (91x91x1): Measurement grid: dx=10mm, dy=10mm
Maximum value of SAR (interpolated) = 14 mW/g

Pin=100mW/Zoom Scan (8x8x8)/Cube 0: Measurement grid: dx=4.3mm, dy=4.3mm, dz=3mm
Reference Value = 52.6 V/m; Power Drift = -0.027 dB
Peak SAR (extrapolated) = 27.7 W/kg
SAR(1 g) = 7.78 mW/g; SAR(10 g) = 2.21 mW/g
Maximum value of SAR (measured) = 13 mW/g

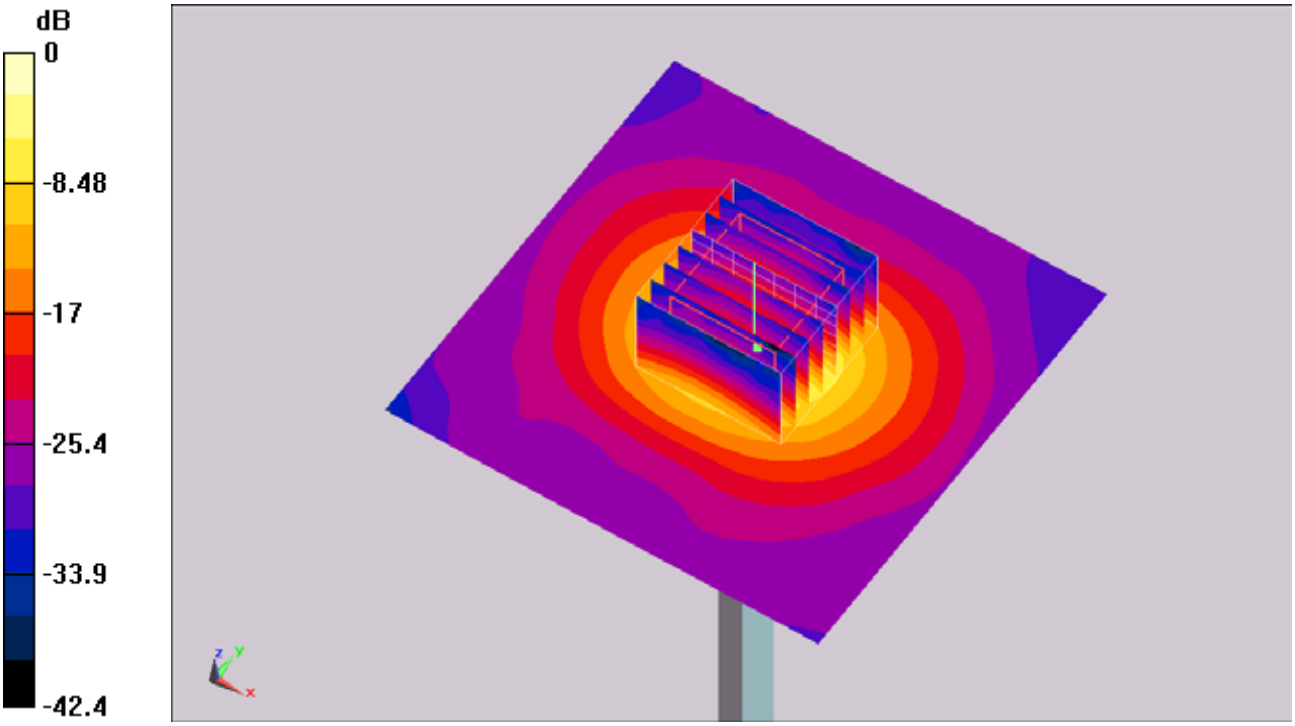

0 dB = 13mW/g

Appendix B. Plots of SAR Measurement

The plots are shown as follows.

#01 802.11b_Bottom_0cm_Ch6_ANT B

DUT: 052506-01

Communication System: 802.11b ; Frequency: 2437 MHz;Duty Cycle: 1:1
Medium: MSL_2450_100625 Medium parameters used: f = 2437 MHz; σ = 1.91 mho/m; ε_r = 53.6; ρ = 1000 kg/m^3
Ambient Temperature：22.5 °C; Liquid Temperature：21.4 °C

DASY5 Configuration:
- Probe: ET3DV6 - SN1788; ConvF(4.19, 4.19, 4.19); Calibrated: 2009/9/23
- Sensor-Surface: 4mm (Mechanical Surface Detection)
- Electronics: DAE4 Sn778; Calibrated: 2009/9/18
- Phantom: ELI 4.0; Type: QDOVA001BA; Serial: 1029
- Measurement SW: DASY5, V5.0 Build 125; SEMCAD X Version 13.4 Build 125

Ch6/Area Scan (181x191x1): Measurement grid: dx=20mm, dy=20mm
Maximum value of SAR (interpolated) = 0.032 mW/g

Ch6/Zoom Scan (5x5x7)/Cube 0: Measurement grid: dx=8mm, dy=8mm, dz=5mm
Reference Value = 1.08 V/m; Power Drift = 0.195 dB
Peak SAR (extrapolated) = 0.054 W/kg
SAR(1 g) = 0.014 mW/g; SAR(10 g) = 0.00939 mW/g
Maximum value of SAR (measured) = 0.013 mW/g

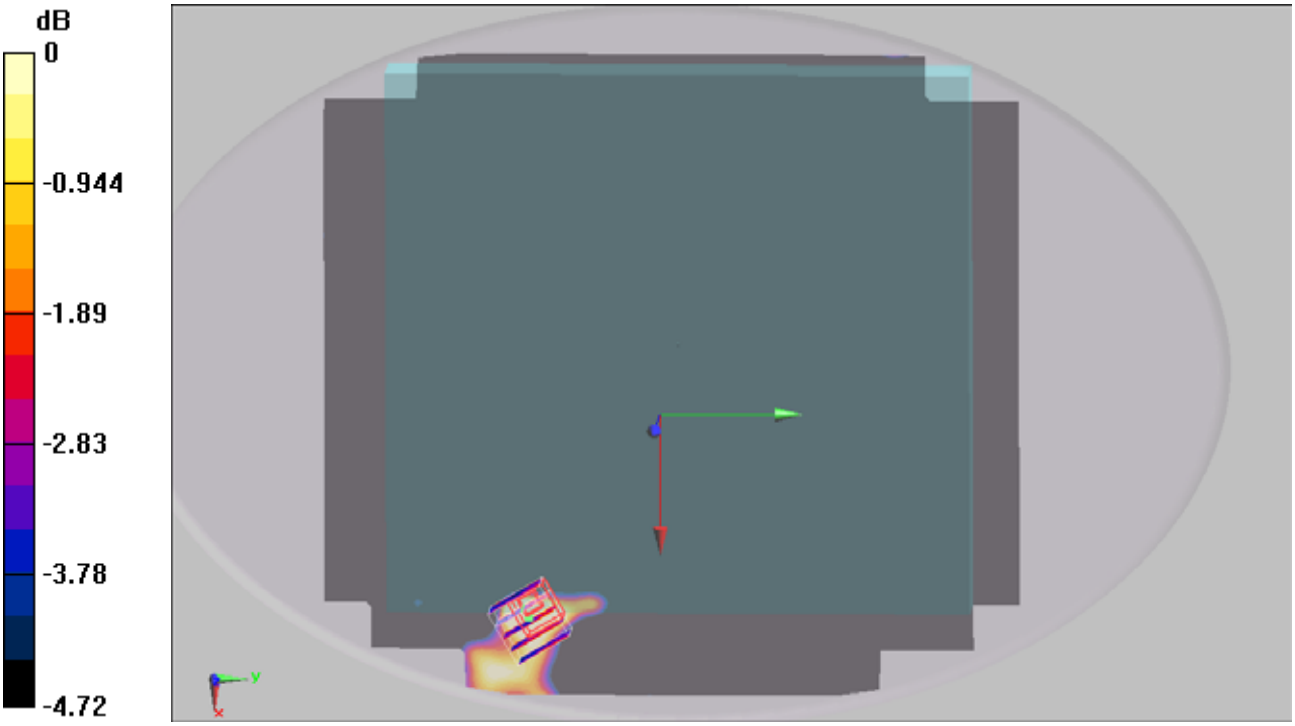

0 dB = 0.013mW/g

#01 802.11b_Bottom_0cm_Ch6_ANT B_2D

DUT: 052506-01

Communication System: 802.11b ; Frequency: 2437 MHz;Duty Cycle: 1:1
Medium: MSL_2450_100625 Medium parameters used: f = 2437 MHz; σ = 1.91 mho/m; ε_r = 53.6; ρ = 1000 kg/m^3
Ambient Temperature：22.5 °C; Liquid Temperature：21.4 °C

DASY5 Configuration:
- Probe: ET3DV6 - SN1788; ConvF(4.19, 4.19, 4.19); Calibrated: 2009/9/23
- Sensor-Surface: 4mm (Mechanical Surface Detection)
- Electronics: DAE4 Sn778; Calibrated: 2009/9/18
- Phantom: ELI 4.0; Type: QDOVA001BA; Serial: 1029
- Measurement SW: DASY5, V5.0 Build 125; SEMCAD X Version 13.4 Build 125

Ch6/Area Scan (141x151x1): Measurement grid: dx=25mm, dy=25mm
Maximum value of SAR (interpolated) = 0.032 mW/g

Ch6/Zoom Scan (5x5x7)/Cube 0: Measurement grid: dx=8mm, dy=8mm, dz=5mm
Reference Value = 1.08 V/m; Power Drift = 0.195 dB
Peak SAR (extrapolated) = 0.054 W/kg
SAR(1 g) = 0.014 mW/g; SAR(10 g) = 0.00939 mW/g
Maximum value of SAR (measured) = 0.013 mW/g

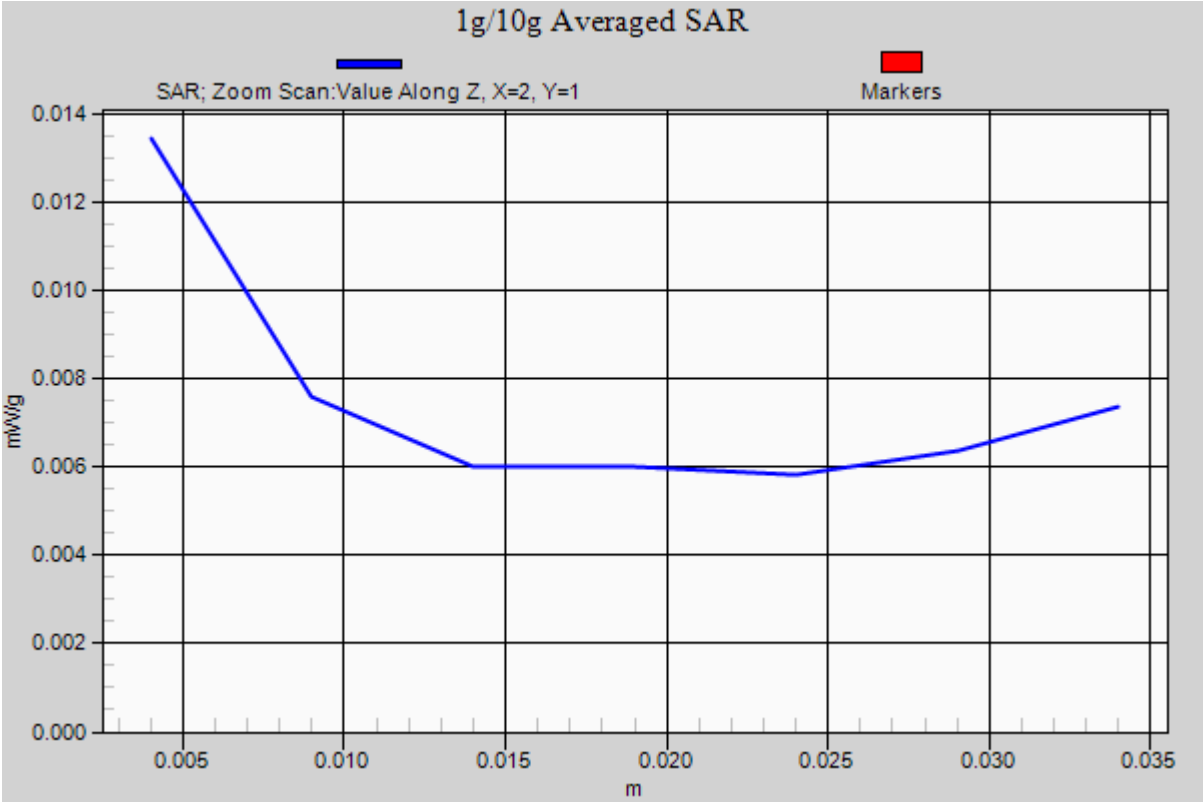

#25 802.11a_Bottom_0cm_Ch165_ANT B

DUT: 052506-01

Communication System: 802.11a; Frequency: 5825 MHz;Duty Cycle: 1:1
Medium: MSL_5G_100527 Medium parameters used: f = 5825 MHz; σ = 6.21 mho/m; ε_r = 46.4; ρ = 1000 kg/m^3
Ambient Temperature：22.4 °C; Liquid Temperature：21.2 °C

DASY5 Configuration:
- Probe: EX3DV3 - SN3514; ConvF(3.9, 3.9, 3.9); Calibrated: 2010/1/26
- Sensor-Surface: 2mm (Mechanical Surface Detection)
- Electronics: DAE4 Sn778; Calibrated: 2009/9/18
- Phantom: ELI 4.0; Type: QDOVA001BA; Serial: 1029
- Measurement SW: DASY5, V5.0 Build 125; SEMCAD X Version 13.4 Build 125

Ch165/Area Scan (151x201x1): Measurement grid: dx=10mm, dy=10mm
Maximum value of SAR (interpolated) = 0.117 mW/g

Ch165/Zoom Scan (8x8x10)/Cube 0: Measurement grid: dx=4mm, dy=4mm, dz=2.5mm
Reference Value = 0.409 V/m; Power Drift = 0.141 dB
Peak SAR (extrapolated) = 0.257 W/kg
SAR(1 g) = 0.079 mW/g; SAR(10 g) = 0.041 mW/g
Maximum value of SAR (measured) = 0.140 mW/g

Ch165/Zoom Scan (8x8x10)/Cube 1: Measurement grid: dx=4mm, dy=4mm, dz=2.5mm
Reference Value = 0.409 V/m; Power Drift = 0.141 dB
Peak SAR (extrapolated) = 0.202 W/kg
SAR(1 g) = 0.047 mW/g; SAR(10 g) = 0.029 mW/g
Maximum value of SAR (measured) = 0.078 mW/g

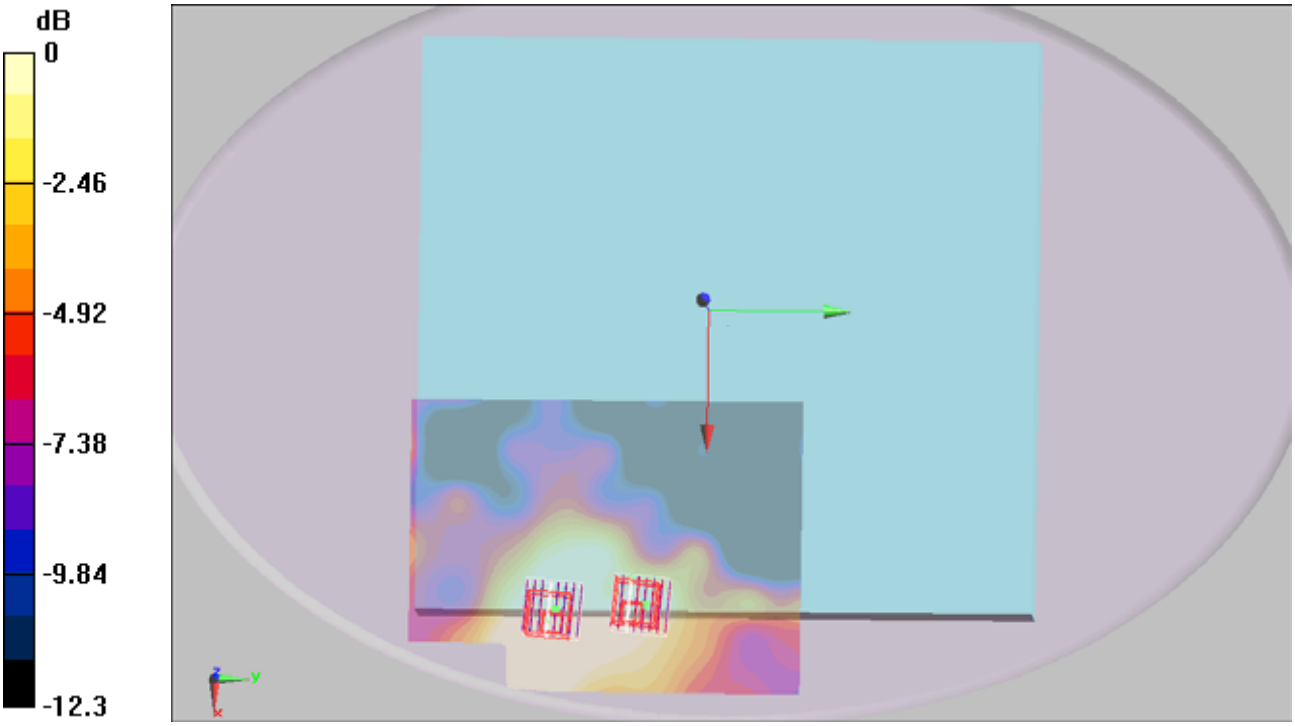

0 dB = 0.078mW/g

#25 802.11a_Bottom_0cm_Ch165_ANT B_2D

DUT: 052506-01

Communication System: 802.11a; Frequency: 5825 MHz;Duty Cycle: 1:1
Medium: MSL_5G_100527 Medium parameters used: f = 5825 MHz; σ = 6.21 mho/m; ε_r = 46.4; ρ = 1000 kg/m^3
Ambient Temperature：22.4 °C; Liquid Temperature：21.2 °C

DASY5 Configuration:
- Probe: EX3DV3 - SN3514; ConvF(3.9, 3.9, 3.9); Calibrated: 2010/1/26
- Sensor-Surface: 2mm (Mechanical Surface Detection)
- Electronics: DAE4 Sn778; Calibrated: 2009/9/18
- Phantom: ELI 4.0; Type: QDOVA001BA; Serial: 1029
- Measurement SW: DASY5, V5.0 Build 125; SEMCAD X Version 13.4 Build 125

Ch165/Area Scan (151x201x1): Measurement grid: dx=10mm, dy=10mm
Maximum value of SAR (interpolated) = 0.117 mW/g

Ch165/Zoom Scan (8x8x10)/Cube 0: Measurement grid: dx=4mm, dy=4mm, dz=2.5mm
Reference Value = 0.409 V/m; Power Drift = 0.141 dB
Peak SAR (extrapolated) = 0.257 W/kg
SAR(1 g) = 0.079 mW/g; SAR(10 g) = 0.041 mW/g
Maximum value of SAR (measured) = 0.140 mW/g

Ch165/Zoom Scan (8x8x10)/Cube 1: Measurement grid: dx=4mm, dy=4mm, dz=2.5mm
Reference Value = 0.409 V/m; Power Drift = 0.141 dB
Peak SAR (extrapolated) = 0.202 W/kg
SAR(1 g) = 0.047 mW/g; SAR(10 g) = 0.029 mW/g
Maximum value of SAR (measured) = 0.078 mW/g

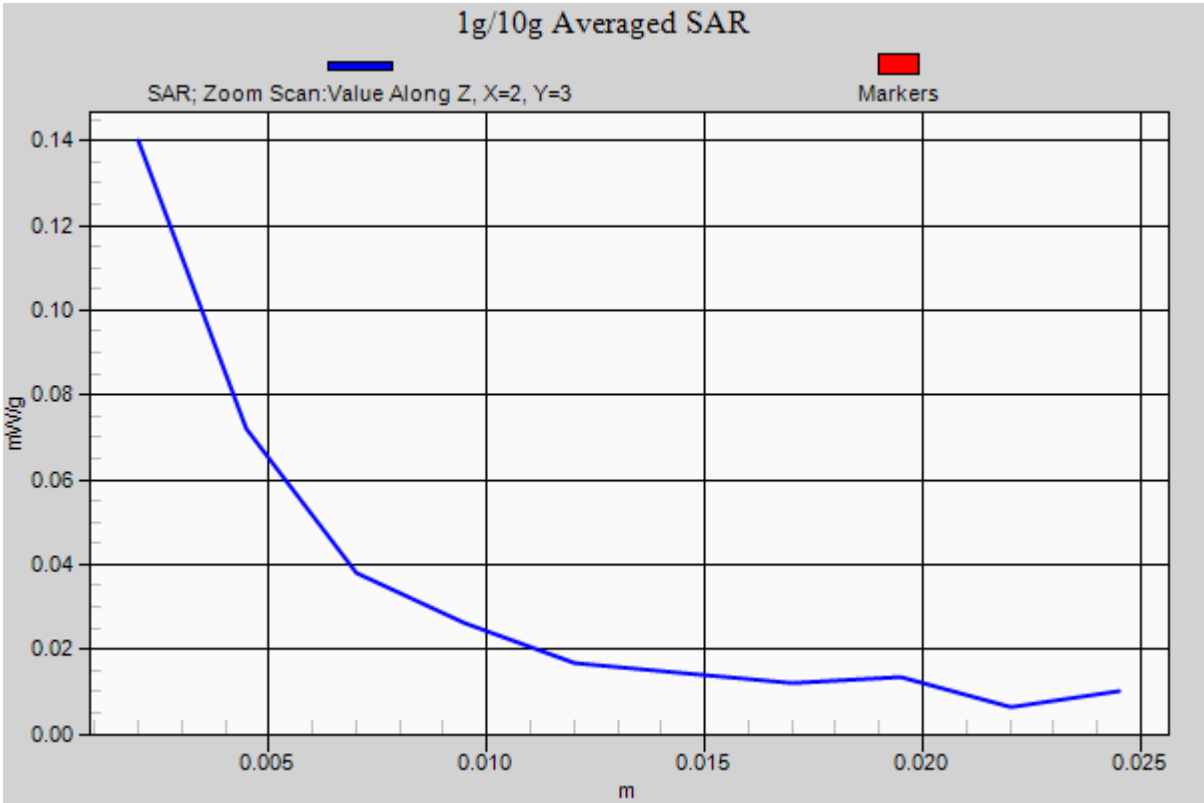

Appendix C. DASY Calibration Certificate

The DASY calibration certificates are shown as follows.

Calibration Laboratory of
Schmid & Partner
Engineering AG
Zeughausstrasse 43, 8004 Zurich, Switzerland

S Schweizerischer Kalibrierdienst
C Service suisse d'étalonnage
Servizio svizzero di taratura
S Swiss Calibration Service

Accredited by the Swiss Accreditation Service (SAS)
The Swiss Accreditation Service is one of the signatories to the EA Multilateral Agreement for the recognition of calibration certificates

Accreditation No.: SCS 108

Client Sporton (Auden)

Certificate No: D2450V2-736_Jul09

CALIBRATION CERTIFICATE

Object	D2450V2 - SN: 736
Calibration procedure(s)	QA CAL-05.v7 Calibration procedure for dipole validation kits
Calibration date:	July 20, 2009
Condition of the calibrated item	In Tolerance

This calibration certificate documents the traceability to national standards, which realize the physical units of measurements (SI).
The measurements and the uncertainties with confidence probability are given on the following pages and are part of the certificate.

All calibrations have been conducted in the closed laboratory facility: environment temperature (22 ± 3)°C and humidity < 70%.

Calibration Equipment used (M&TE critical for calibration)

Primary Standards	ID #	Cal Date (Calibrated by, Certificate No.)	Scheduled Calibration
Power meter EPM-442A	GB37480704	08-Oct-08 (No. 217-00898)	Oct-09
Power sensor HP 8481A	US37292783	08-Oct-08 (No. 217-00898)	Oct-09
Reference 20 dB Attenuator	SN: 5086 (20g)	31-Mar-09 (No. 217-01025)	Mar-10
Type-N mismatch combination	SN: 5047.2 / 06327	31-Mar-09 (No. 217-01029)	Mar-10
Reference Probe ES3DV2	SN: 3025	30-Apr-09 (No. ES3-3025_Apr09)	Apr-10
DAE4	SN: 601	07-Mar-09 (No. DAE4-601_Mar09)	Mar-10

Secondary Standards	ID #	Check Date (in house)	Scheduled Check
Power sensor HP 8481A	MY41092317	18-Oct-02 (in house check Oct-07)	In house check: Oct-09
RF generator R&S SMT-06	100005	4-Aug-99 (in house check Oct-07)	In house check: Oct-09
Network Analyzer HP 8753E	US37390585 S4206	18-Oct-01 (in house check Oct-08)	In house check: Oct-09

	Name	Function	Signature
Calibrated by:	Claudio Leubler	Laboratory Technician	
Approved by:	Katja Pokovic	Technical Manager	

Issued: July 22, 2009

This calibration certificate shall not be reproduced except in full without written approval of the laboratory.

Calibration Laboratory of
Schmid & Partner
Engineering AG
Zeughausstrasse 43, 8004 Zurich, Switzerland

S Schweizerischer Kalibrierdienst
C Service suisse d'étalonnage
Servizio svizzero di taratura
S Swiss Calibration Service

Accredited by the Swiss Accreditation Service (SAS)
The Swiss Accreditation Service is one of the signatories to the EA Multilateral Agreement for the recognition of calibration certificates

Accreditation No.: **SCS 108**

Glossary:

TSL	tissue simulating liquid
ConvF	sensitivity in TSL / NORM x,y,z
N/A	not applicable or not measured

Calibration is Performed According to the Following Standards:

a) IEEE Std 1528-2003, "IEEE Recommended Practice for Determining the Peak Spatial-Averaged Specific Absorption Rate (SAR) in the Human Head from Wireless Communications Devices: Measurement Techniques", December 2003
b) IEC 62209-1, "Procedure to measure the Specific Absorption Rate (SAR) for hand-held devices used in close proximity to the ear (frequency range of 300 MHz to 3 GHz)", February 2005
c) Federal Communications Commission Office of Engineering & Technology (FCC OET), "Evaluating Compliance with FCC Guidelines for Human Exposure to Radiofrequency Electromagnetic Fields; Additional Information for Evaluating Compliance of Mobile and Portable Devices with FCC Limits for Human Exposure to Radiofrequency Emissions", Supplement C (Edition 01-01) to Bulletin 65

Additional Documentation:

d) DASY4/5 System Handbook

Methods Applied and Interpretation of Parameters:

- *Measurement Conditions:* Further details are available from the Validation Report at the end of the certificate. All figures stated in the certificate are valid at the frequency indicated.
- *Antenna Parameters with TSL:* The dipole is mounted with the spacer to position its feed point exactly below the center marking of the flat phantom section, with the arms oriented parallel to the body axis.
- *Feed Point Impedance and Return Loss:* These parameters are measured with the dipole positioned under the liquid filled phantom. The impedance stated is transformed from the measurement at the SMA connector to the feed point. The Return Loss ensures low reflected power. No uncertainty required.
- *Electrical Delay:* One-way delay between the SMA connector and the antenna feed point. No uncertainty required.
- *SAR measured:* SAR measured at the stated antenna input power.
- *SAR normalized:* SAR as measured, normalized to an input power of 1 W at the antenna connector.
- *SAR for nominal TSL parameters:* The measured TSL parameters are used to calculate the nominal SAR result.

Measurement Conditions

DASY system configuration, as far as not given on page 1.

DASY Version	DASY5	V5.0
Extrapolation	Advanced Extrapolation	
Phantom	Modular Flat Phantom V5.0	
Distance Dipole Center - TSL	10 mm	with Spacer
Zoom Scan Resolution	dx, dy, dz = 5 mm	
Frequency	2450 MHz ± 1 MHz	

Head TSL parameters

The following parameters and calculations were applied.

	Temperature	**Permittivity**	**Conductivity**
Nominal Head TSL parameters	22.0 °C	39.2	1.80 mho/m
Measured Head TSL parameters	(22.0 ± 0.2) °C	40.2 ± 6 %	1.78 mho/m ± 6 %
Head TSL temperature during test	(22.0 ± 0.2) °C	----	----

SAR result with Head TSL

SAR averaged over 1 cm^3 (1 g) of Head TSL	Condition	
SAR measured	250 mW input power	13.4 mW / g
SAR normalized	normalized to 1W	53.6 mW / g
SAR for nominal Head TSL parameters [1]	normalized to 1W	**54.2 mW /g ± 17.0 % (k=2)**

SAR averaged over 10 cm^3 (10 g) of Head TSL	condition	
SAR measured	250 mW input power	6.33 mW / g
SAR normalized	normalized to 1W	25.3 mW / g
SAR for nominal Head TSL parameters [1]	normalized to 1W	**25.5 mW /g ± 16.5 % (k=2)**

[1] Correction to nominal TSL parameters according to d), chapter "SAR Sensitivities"

Body TSL parameters

The following parameters and calculations were applied.

	Temperature	Permittivity	Conductivity
Nominal Body TSL parameters	22.0 °C	52.7	1.95 mho/m
Measured Body TSL parameters	(22.0 ± 0.2) °C	52.8 ± 6 %	1.99 mho/m ± 6 %
Body TSL temperature during test	(21.0 ± 0.2) °C	----	----

SAR result with Body TSL

SAR averaged over 1 cm^3 (1 g) of Body TSL	Condition	
SAR measured	250 mW input power	13.4 mW / g
SAR normalized	normalized to 1W	53.6 mW / g
SAR for nominal Body TSL parameters [2]	normalized to 1W	**53.0 mW /g ± 17.0 % (k=2)**

SAR averaged over 10 cm^3 (10 g) of Body TSL	condition	
SAR measured	250 mW input power	6.26 mW / g
SAR normalized	normalized to 1W	25.0 mW / g
SAR for nominal Body TSL parameters [2]	normalized to 1W	**24.9 mW /g ± 16.5 % (k=2)**

[2] Correction to nominal TSL parameters according to d), chapter "SAR Sensitivities"

Appendix

Antenna Parameters with Head TSL

Impedance, transformed to feed point	53.9 Ω + 2.2 jΩ
Return Loss	- 27.2 dB

Antenna Parameters with Body TSL

Impedance, transformed to feed point	49.7 Ω + 4.2 jΩ
Return Loss	- 27.4 dB

General Antenna Parameters and Design

Electrical Delay (one direction)	1.158 ns

After long term use with 100W radiated power, only a slight warming of the dipole near the feedpoint can be measured.

The dipole is made of standard semirigid coaxial cable. The center conductor of the feeding line is directly connected to the second arm of the dipole. The antenna is therefore short-circuited for DC-signals.
No excessive force must be applied to the dipole arms, because they might bend or the soldered connections near the feedpoint may be damaged.

Additional EUT Data

Manufactured by	SPEAG
Manufactured on	August 26, 2003

DASY5 Validation Report for Head TSL

Date/Time: 20.07.2009 17:44:29

Test Laboratory: SPEAG, Zurich, Switzerland

DUT: Dipole 2450 MHz; Type: D2450V2; Serial: D2450V2 - SN736

Communication System: CW; Frequency: 2450 MHz; Duty Cycle: 1:1
Medium: HSL U11 BB
Medium parameters used: f = 2450 MHz; σ = 1.78 mho/m; ε_r = 40.2; ρ = 1000 kg/m^3
Phantom section: Flat Section
Measurement Standard: DASY5 (IEEE/IEC)

DASY5 Configuration:

- Probe: ES3DV2 - SN3025; ConvF(4.35, 4.35, 4.35); Calibrated: 30.04.2009
- Sensor-Surface: 3mm (Mechanical Surface Detection)
- Electronics: DAE4 Sn601; Calibrated: 07.03.2009
- Phantom: Flat Phantom 5.0 (front); Type: QD000P50AA; Serial: 1001
- Measurement SW: DASY5, V5.0 Build 120; SEMCAD X Version 13.4 Build 45

Pin = 250 mW; d = 10 mm/Zoom Scan (7x7x7)/Cube 0:
Measurement grid: dx=5mm, dy=5mm, dz=5mm
Reference Value = 100.6 V/m; Power Drift = 0.037 dB
Peak SAR (extrapolated) = 27.4 W/kg
SAR(1 g) = 13.4 mW/g; SAR(10 g) = 6.33 mW/g
Maximum value of SAR (measured) = 16.9 mW/g

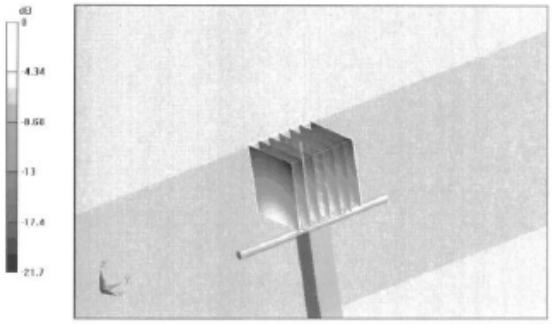

0 dB = 16.9mW/g

Impedance Measurement Plot for Head TSL

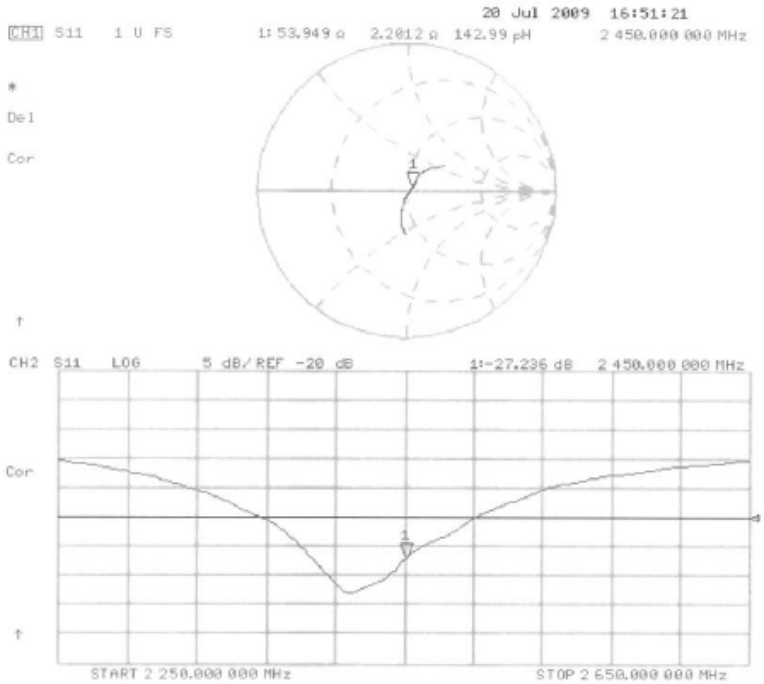

DASY5 Validation Report for Body TSL

Date/Time: 14.07.2009 17:46:41

Test Laboratory: SPEAG, Zurich, Switzerland

DUT: Dipole 2450 MHz; Type: D2450V2; Serial: D2450V2 - SN:736

Communication System: CW; Frequency: 2450 MHz; Duty Cycle: 1:1
Medium: MSL U10 BB
Medium parameters used: f = 2450 MHz; σ = 2 mho/m; ε_r = 52.9; ρ = 1000 kg/m^3
Phantom section: Flat Section
Measurement Standard: DASY5 (IEEE/IEC)

DASY5 Configuration:

- Probe: ES3DV2 - SN3025; ConvF(4.06, 4.06, 4.06); Calibrated: 30.04.2009
- Sensor-Surface: 3mm (Mechanical Surface Detection)
- Electronics: DAE4 Sn601; Calibrated: 07.03.2009
- Phantom: Flat Phantom 5.0 (back); Type: QD000P50AA; Serial: 1002
- Measurement SW: DASY5, V5.0 Build 120; SEMCAD X Version 13.4 Build 45

Pin = 250 mW; d = 10 mm/Zoom Scan (7x7x7)/Cube 0:
Measurement grid: dx=5mm, dy=5mm, dz=5mm
Reference Value = 98 V/m; Power Drift = -0.018 dB
Peak SAR (extrapolated) = 27.1 W/kg
SAR(1 g) = 13.4 mW/g; SAR(10 g) = 6.26 mW/g
Maximum value of SAR (measured) = 17.8 mW/g

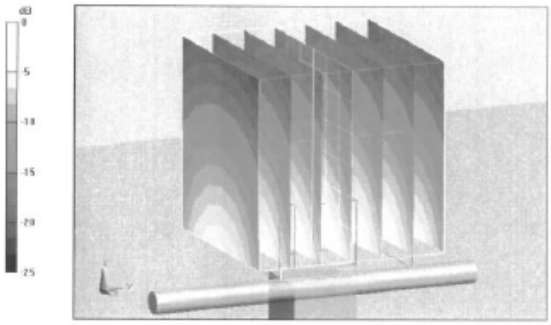

0 dB = 17.8mW/g

Impedance Measurement Plot for Body TSL

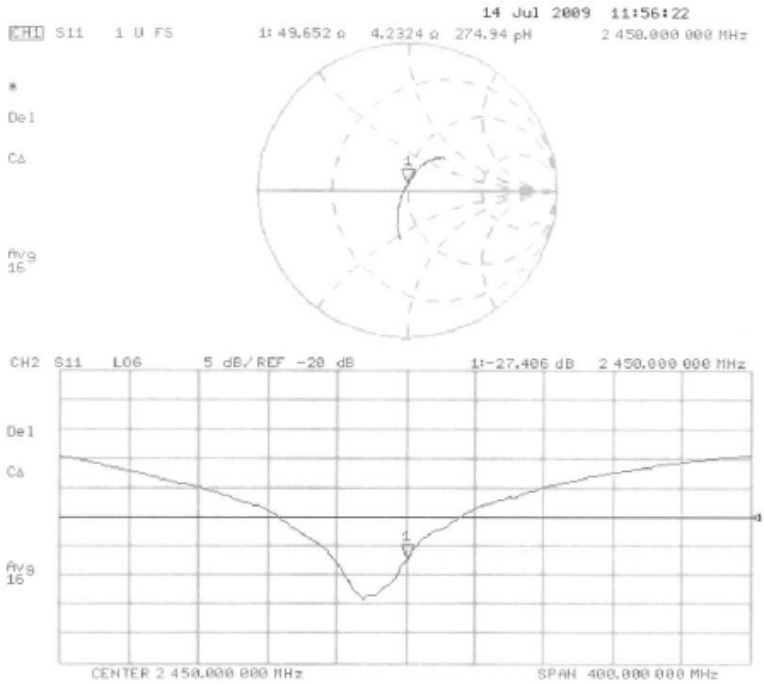

Calibration Laboratory of
Schmid & Partner
Engineering AG
Zeughausstrasse 43, 8004 Zurich, Switzerland

S Schweizerischer Kalibrierdienst
C Service suisse d'étalonnage
Servizio svizzero di taratura
S Swiss Calibration Service

Accredited by the Swiss Accreditation Service (SAS)
The Swiss Accreditation Service is one of the signatories to the EA Multilateral Agreement for the recognition of calibration certificates

Accreditation No.: SCS 108

Client **Sporton (Auden)**

Certificate No: D5GHzV2-1006_Jan10/2

CALIBRATION CERTIFICATE (Replacement of No:D5GHzV2-1006_Jan10)

Object	D5GHzV2 - SN: 1006
Calibration procedure(s)	QA CAL-22.v1 Calibration procedure for dipole validation kits between 3-6 GHz
Calibration date:	January 21, 2010

This calibration certificate documents the traceability to national standards, which realize the physical units of measurements (SI).
The measurements and the uncertainties with confidence probability are given on the following pages and are part of the certificate.

All calibrations have been conducted in the closed laboratory facility: environment temperature (22 ± 3)°C and humidity < 70%.

Calibration Equipment used (M&TE critical for calibration)

Primary Standards	ID #	Cal Date (Certificate No.)	Scheduled Calibration
Power meter EPM-442A	GB37480704	06-Oct-09 (No. 217-01086)	Oct-10
Power sensor HP 8481A	US37292783	06-Oct-09 (No. 217-01086)	Oct-10
Reference 20 dB Attenuator	SN: 5086 (20g)	31-Mar-09 (No. 217-01025)	Mar-10
Type-N mismatch combination	SN: 5047.2 / 06327	31-Mar-09 (No. 217-01029)	Mar-10
Reference Probe EX3DV4	SN: 3503	11-Mar-09 (No. EX3-3503_Mar09)	Mar-10
DAE4	SN: 601	07-Mar-09 (No. DAE4-601_Mar09)	Mar-10

Secondary Standards	ID #	Check Date (in house)	Scheduled Check
Power sensor HP 8481A	MY41092317	18-Oct-02 (in house check Oct-09)	In house check: Oct-11
RF generator R&S SMT-06	100005	4-Aug-99 (in house check Oct-09)	In house check: Oct-11
Network Analyzer HP 8753E	US37390585 S4206	18-Oct-01 (in house check Oct-09)	In house check: Oct-10

	Name	Function	Signature
Calibrated by:	Claudio Leubler	Laboratory Technician	
Approved by:	Katja Pokovic	Technical Manager	

Issued: April 21, 2010

This calibration certificate shall not be reproduced except in full without written approval of the laboratory.

Calibration Laboratory of
Schmid & Partner
Engineering AG
Zeughausstrasse 43, 8004 Zurich, Switzerland

S Schweizerischer Kalibrierdienst
C Service suisse d'étalonnage
Servizio svizzero di taratura
S Swiss Calibration Service

Accredited by the Swiss Accreditation Service (SAS)
The Swiss Accreditation Service is one of the signatories to the EA Multilateral Agreement for the recognition of calibration certificates

Accreditation No.: **SCS 108**

Glossary:

TSL	tissue simulating liquid
ConvF	sensitivity in TSL / NORM x,y,z
N/A	not applicable or not measured

Calibration is Performed According to the Following Standards:

a) IEC Std 62209 Part 2, "Evaluation of Human Exposure to Radio Frequency Fields from Handheld and Body-Mounted Wireless Communication Devices in the Frequency Range of 30 MHz to 6 GHz: Human models, Instrumentation, and Procedures"; Part 2: "Procedure to determine the Specific Absorption Rate (SAR) for including accessories and multiple transmitters", Draft Version 0.9, December 2004
b) Federal Communications Commission Office of Engineering & Technology (FCC OET), "Evaluating Compliance with FCC Guidelines for Human Exposure to Radiofrequency Electromagnetic Fields; Additional Information for Evaluating Compliance of Mobile and Portable Devices with FCC Limits for Human Exposure to Radiofrequency Emissions", Supplement C (Edition 01-01) to Bulletin 65

Additional Documentation:

c) DASY4/5 System Handbook

Methods Applied and Interpretation of Parameters:

- *Measurement Conditions:* Further details are available from the Validation Report at the end of the certificate. All figures stated in the certificate are valid at the frequency indicated.
- *Antenna Parameters with TSL:* The dipole is mounted with the spacer to position its feed point exactly below the center marking of the flat phantom section, with the arms oriented parallel to the body axis.
- *Feed Point Impedance and Return Loss:* These parameters are measured with the dipole positioned under the liquid filled phantom. The impedance stated is transformed from the measurement at the SMA connector to the feed point. The Return Loss ensures low reflected power. No uncertainty required.
- *Electrical Delay:* One-way delay between the SMA connector and the antenna feed point. No uncertainty required.
- *SAR measured:* SAR measured at the stated antenna input power.
- *SAR normalized:* SAR as measured, normalized to an input power of 1 W at the antenna connector.
- *SAR for nominal TSL parameters:* The measured TSL parameters are used to calculate the nominal SAR result.

Measurement Conditions

DASY system configuration, as far as not given on page 1.

DASY Version	DASY5	V5.2
Extrapolation	Advanced Extrapolation	
Phantom	Modular Flat Phantom V5.0	
Distance Dipole Center - TSL	10 mm	with Spacer
Area Scan resolution	dx, dy = 10 mm	
Zoom Scan Resolution	dx, dy = 4.0 mm, dz = 2.5 mm	
Frequency	5200 MHz ± 1 MHz 5500 MHz ± 1 MHz 5800 MHz ± 1 MHz	

Head TSL parameters at 5200 MHz

The following parameters and calculations were applied.

	Temperature	**Permittivity**	**Conductivity**
Nominal Head TSL parameters	22.0 °C	36.0	4.66 mho/m
Measured Head TSL parameters	(22.0 ± 0.2) °C	34.8 ± 6 %	4.58 mho/m ± 6 %
Head TSL temperature during test	(21.2 ± 0.2) °C	----	----

SAR result with Head TSL at 5200 MHz

SAR averaged over 1 cm^3 (1 g) of Head TSL	condition	
SAR measured	100 mW input power	8.28 mW / g
SAR normalized	normalized to 1W	82.8 mW / g
SAR for nominal Head TSL parameters	normalized to 1W	**82.2 mW / g ± 19.9 % (k=2)**

SAR averaged over 10 cm^3 (10 g) of Head TSL	condition	
SAR measured	100 mW input power	2.35 mW / g
SAR normalized	normalized to 1W	23.5 mW / g
SAR for nominal Head TSL parameters	normalized to 1W	**23.3 mW / g ± 19.5 % (k=2)**

Head TSL parameters at 5500 MHz

The following parameters and calculations were applied.

	Temperature	Permittivity	Conductivity
Nominal Head TSL parameters	22.0 °C	35.6	4.96 mho/m
Measured Head TSL parameters	(22.0 ± 0.2) °C	34.1 ± 6 %	4.86 mho/m ± 6 %
Head TSL temperature during test	(21.2 ± 0.2) °C	----	----

SAR result with Head TSL at 5500 MHz

SAR averaged over 1 cm^3 (1 g) of Head TSL	condition	
SAR measured	100 mW input power	8.96 mW / g
SAR normalized	normalized to 1W	89.6 mW / g
SAR for nominal Head TSL parameters	normalized to 1W	**88.8 mW / g ± 19.9 % (k=2)**

SAR averaged over 10 cm^3 (10 g) of Head TSL	condition	
SAR measured	100 mW input power	2.53 mW / g
SAR normalized	normalized to 1W	25.3 mW / g
SAR for nominal Head TSL parameters	normalized to 1W	**25.0 mW / g ± 19.5 % (k=2)**

Head TSL parameters at 5800 MHz

The following parameters and calculations were applied.

	Temperature	Permittivity	Conductivity
Nominal Head TSL parameters	22.0 °C	35.3	5.27 mho/m
Measured Head TSL parameters	(22.0 ± 0.2) °C	33.7 ± 6 %	5.13 mho/m ± 6 %
Head TSL temperature during test	(21.2 ± 0.2) °C	----	----

SAR result with Head TSL at 5800 MHz

SAR averaged over 1 cm^3 (1 g) of Head TSL	condition	
SAR measured	100 mW input power	7.90 mW / g
SAR normalized	normalized to 1W	79.0 mW / g
SAR for nominal Head TSL parameters	normalized to 1W	**78.2 mW / g ± 19.9 % (k=2)**

SAR averaged over 10 cm^3 (10 g) of Head TSL	condition	
SAR measured	100 mW input power	2.23 mW / g
SAR normalized	normalized to 1W	22.3 mW / g
SAR for nominal Head TSL parameters	normalized to 1W	**22.3 mW / g ± 19.5 % (k=2)**

Body TSL parameters at 5200 MHz

The following parameters and calculations were applied.

	Temperature	Permittivity	Conductivity
Nominal Body TSL parameters	22.0 °C	49.0	5.30 mho/m
Measured Body TSL parameters	(22.0 ± 0.2) °C	47.5 ± 6 %	5.52 mho/m ± 6 %
Body TSL temperature during test	(22.0 ± 0.2) °C	----	----

SAR result with Body TSL at 5200 MHz

SAR averaged over 1 cm^3 (1 g) of Body TSL	condition	
SAR measured	100 mW input power	7.95 mW / g
SAR normalized	normalized to 1W	79.5 mW / g
SAR for nominal Body TSL parameters	normalized to 1W	**79.0 mW / g ± 19.9 % (k=2)**

SAR averaged over 10 cm^3 (10 g) of Body TSL	condition	
SAR measured	100 mW input power	2.21 mW / g
SAR normalized	normalized to 1W	22.1 mW / g
SAR for nominal Body TSL parameters	normalized to 1W	**22.0 mW / g ± 19.5 % (k=2)**

Body TSL parameters at 5500 MHz

The following parameters and calculations were applied.

	Temperature	Permittivity	Conductivity
Nominal Body TSL parameters	22.0 °C	48.6	5.65 mho/m
Measured Body TSL parameters	(22.0 ± 0.2) °C	46.8 ± 6 %	5.89 mho/m ± 6 %
Body TSL temperature during test	(22.0 ± 0.2) °C	----	----

SAR result with Body TSL at 5500 MHz

SAR averaged over 1 cm^3 (1 g) of Body TSL	condition	
SAR measured	100 mW input power	8.60 mW / g
SAR normalized	normalized to 1W	86.0 mW / g
SAR for nominal Body TSL parameters	normalized to 1W	**85.4 mW / g ± 19.9 % (k=2)**

SAR averaged over 10 cm^3 (10 g) of Body TSL	condition	
SAR measured	100 mW input power	2.36 mW / g
SAR normalized	normalized to 1W	23.6 mW / g
SAR for nominal Body TSL parameters	normalized to 1W	**23.5 mW / g ± 19.5 % (k=2)**

Body TSL parameters at 5800 MHz

The following parameters and calculations were applied.

	Temperature	Permittivity	Conductivity
Nominal Body TSL parameters	22.0 °C	48.2	6.00 mho/m
Measured Body TSL parameters	(22.0 ± 0.2) °C	46.1 ± 6 %	6.26 mho/m ± 6 %
Body TSL temperature during test	(22.0 ± 0.2) °C	----	----

SAR result with Body TSL at 5800 MHz

SAR averaged over 1 cm^3 (1 g) of Body TSL	condition	
SAR measured	100 mW input power	7.43 mW / g
SAR normalized	normalized to 1W	74.3 mW / g
SAR for nominal Body TSL parameters	normalized to 1W	**73.7 mW / g ± 19.9 % (k=2)**

SAR averaged over 10 cm^3 (10 g) of Body TSL	condition	
SAR measured	100 mW input power	2.04 mW / g
SAR normalized	normalized to 1W	20.4 mW / g
SAR for nominal Body TSL parameters	normalized to 1W	**20.2 mW / g ± 19.5 % (k=2)**