Regulatory WLAN Antenna Information (Template)

English Language Required for Intel Regulatory Review / Approval

(OEM/ODM or antenna vendor is required to complete this document with platform antenna information.

Remove Intel references and make this your own document)

Platform information

Brand	ODM	****End product model name	Intel platform (ex: Yes, No or NA)	Platform type (ex: regular NB, convertible PC, AIO…etc)	*SAR minimum separation (mm)
Getac		F110 ,F110-501	Yes	Tablet PC	5

*****Please fill in exact product model name and make sure the model name is visible on product cover or any parts for end users recognize for authority inspection.**

Antenna information

Vendor	Type	Antenna Part number (Main)	Antenna Part number (Aux)
Getac	PIFA	421857100003	421857100004

Peak gain w/ cable loss (dBi)*

	2.4GHz 2400-2483.5 MHz	5.2GHz 5150-5250MHz	5.3GHz 5250-5350MHz	5.6GHz 5470-5725MHz	5.8GHz 5725-5850MHz	5.9GHz 5850-5895MHz	6.2GHz 5925-6425MHz	6.5GHz 6425-6525MHz	6.7GHz 6525-6875MHz	7.0 GHz 6875-7125MHz
Main	1.86	2.15	2.07	1.74	1.40	-0.09				
Aux	1.83	0.58	0.58	0.80	1.11	1.11				

Intel Reference Gain/Type/ Separation distance

Antenna Type	Antenna Peak gain (In dBi)*										Distance to the end user (mm)
	2.4GHz 2400-2483.5 MHz	5.2GHz 5150-5250MHz	5.3GHz 5250-5350MHz	5.6GHz 5470-5725MHz	5.8GHz 5725-5850MHz	5.9GHz 5850-5895MHz	6.2GHz 5925-6425MHz	6.5GHz 6425-6525MHz	6.7GHz 6525-6875MHz	7.0GHz 6875-7125MHz	Generic: refer to modular FCC SAR report
Design	**3.00**	**5.00**	**5.00**	**5.00**	**5.00**	**5.00**	**5.00**	**5.00**	**5.00**	**5.00**	Mid-power: ≥ 8 mm
PIFA	**3.24**	**3.64**	**3.73**	**4.77**	**4.97**	**4.72**	**4.83**	**4.30**	**5.37**	**5.59**	
Dipole	**2.89**	**2.92**	**3.19**	**4.41**	**4.22**	**4.22**	**4.83**	**4.30**	**4.49**	**5.34**	Low power: ≥ 5 mm

Notes (marked with *)

*** SAR minimum separation (mm)**

- Regular NB: Minimum antenna-to-body (from antenna bottom to the bottom of the device)

- Tablet / Convertible PC: Minimum antenna-to-edge (5 sides of the device)

- Mini-tablet: Minimum antenna-to-edge (6 sides of the device)

*** 3D Peak Antenna gain should be equal or greater than -2 dBi**
- If a host integrator plans to use a lower gain antenna of the same type, additional CBP(FCC)/EDT(EU) testing need to be performed while the module is installed in the host.

Table of contents

1. Applicable test method

2. Test & System Description
    a. Test setup
    b. Equipment list

3. Setup photo

Section 1. Antenna Assembly Specifications

Section 2. Dimensioned Photos or Drawings of Antennas

Section 3. Radiation characteristics of antenna loaded in Host Platform

Section 4. Antenna Host Platform Location Information

Section 5. Antenna dimensional information for SAR evaluation

Section 6. Diagram Example of Co-Location Antenna Separation

1. **Applicable test methods**

This test report is prepared for F110 antenna testing under a Full Anechoic Chamber.

2. **Test & System Description**

a. Test setup

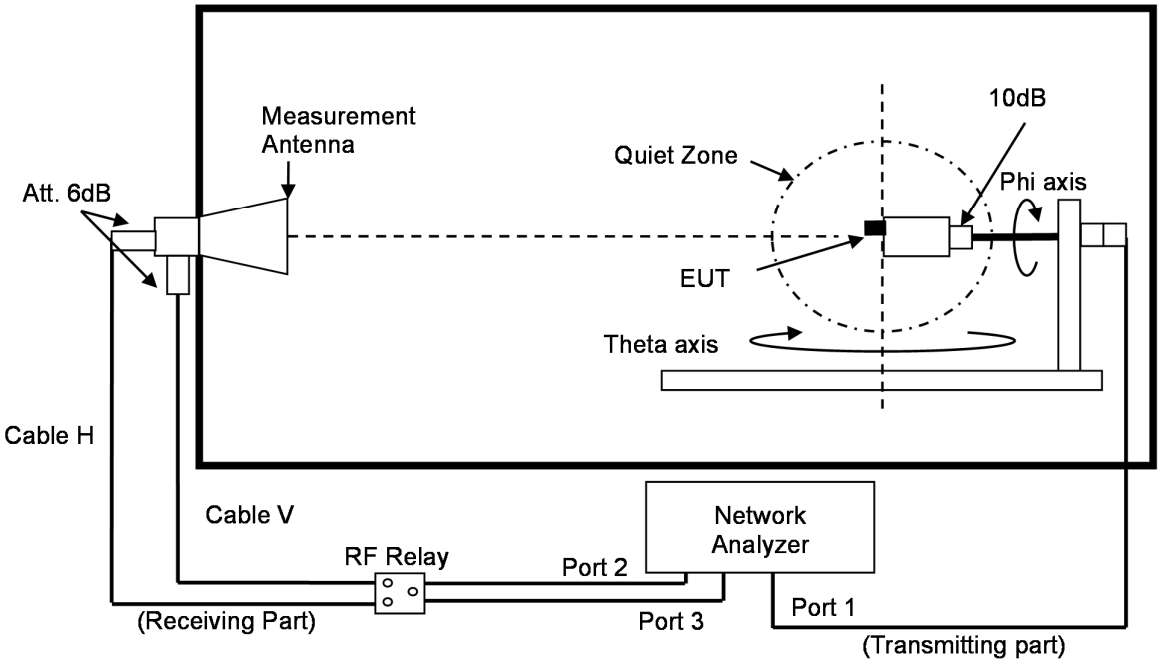

b. Equipment list

Name	Manufacturer	Type/Model	Serial Number	Calibration	
				Last Cal.	Due Date
ENA Series Network Analyzer	Keysight	E5071C	MY46106276	2022/9/27	2023/9/26
RF Switch	Keysight	3499A	N/A	NCR	NCR
Multi-Axis Positioner Controller	ETS-Lindgren	2090	N/A	NCR	NCR
Medium-Duty Positioner	ETS-Lindgren	2015	N/A	NCR	NCR
Measurement Horn Antenna	EMCO	3164-10	00239261	NCR	NCR

3. Setup photo

Antenna Information

Section 1. Antenna Assembly Specifications

1A Antenna Part Number	1B Manufacturer	1C Antenna Type	1D Cable Assembly Part Number and Information	Freq Range MHz	1E * Peak Gain W/ Cable loss (dBi)	1F Peak Gain w/o Cable Loss (dBi)	1G Max VSWR	1H Cable Loss (dB)
(P/N: 421857100003) Main Antenna	Getac	PFIA	50 ohm Coaxial length: 70mm diameter: 1.37mm	2400-2483.5	1.86			
				5150-5250	2.15			
				5250-5350	2.07			
				5470-5725	1.74			
				5725-5850	1.40			
				5850-5895	-0.09			
(P/N: 421857100004) Aux Antenna	Getac	PIFA	50 ohm Coaxial length: 240mm diameter: 0.81mm	2400-2483.5	1.83			
				5150-5250	0.58			
				5250-5350	0.58			
				5470-5725	0.80			
				5725-5850	1.11			
				5850-5895	1.11			

- **3D Antenna Peak Gain required being test in system basis.**

Section 2. Dimensioned Photos and Drawings of Antennas

Include the dimensioned photo and drawing of Main antenna here.

Main Antenna Drawing:

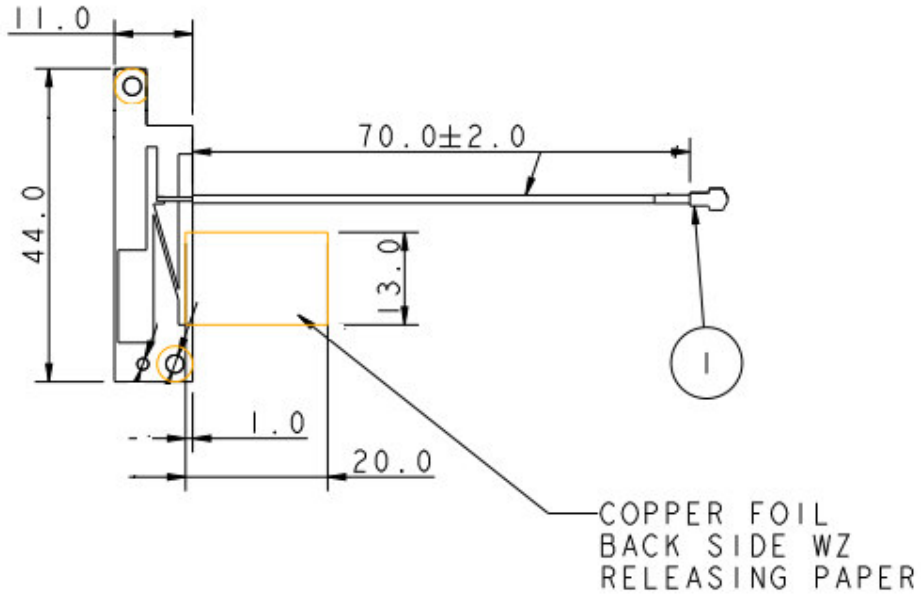

Main Antenna Photo (Front/Back):

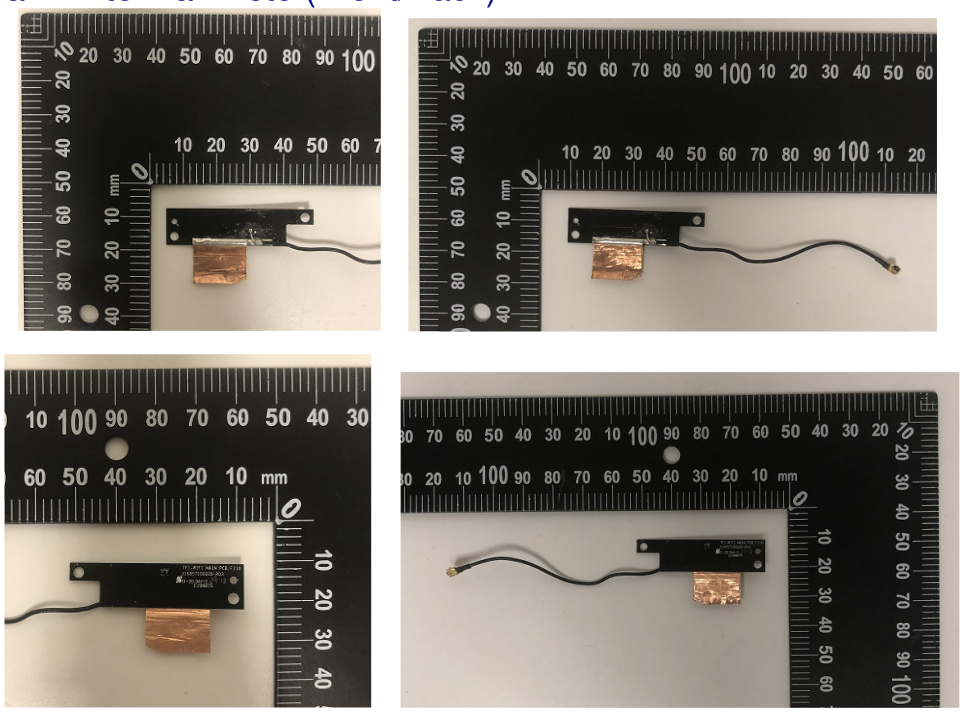

Include the dimensioned photo and drawing of Aux antenna here.

Aux Antenna Drawing:

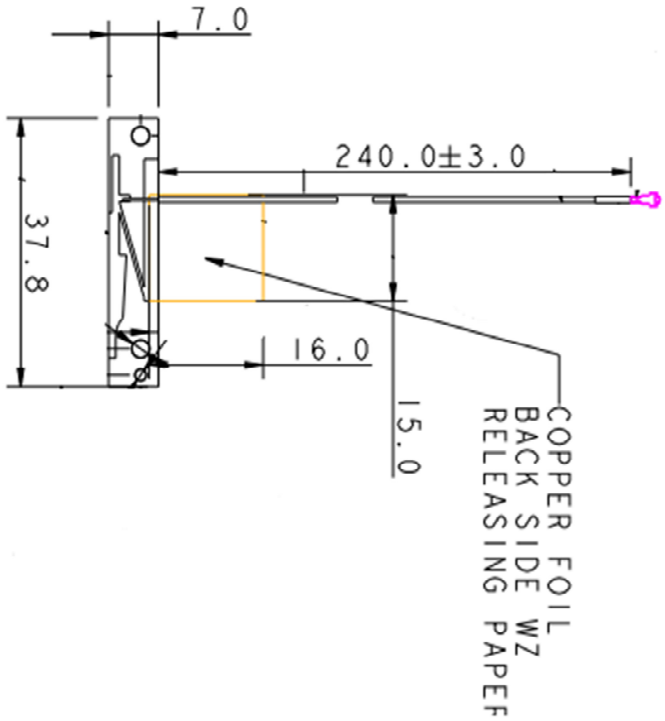

Aux Antenna Photo (Front/Back):

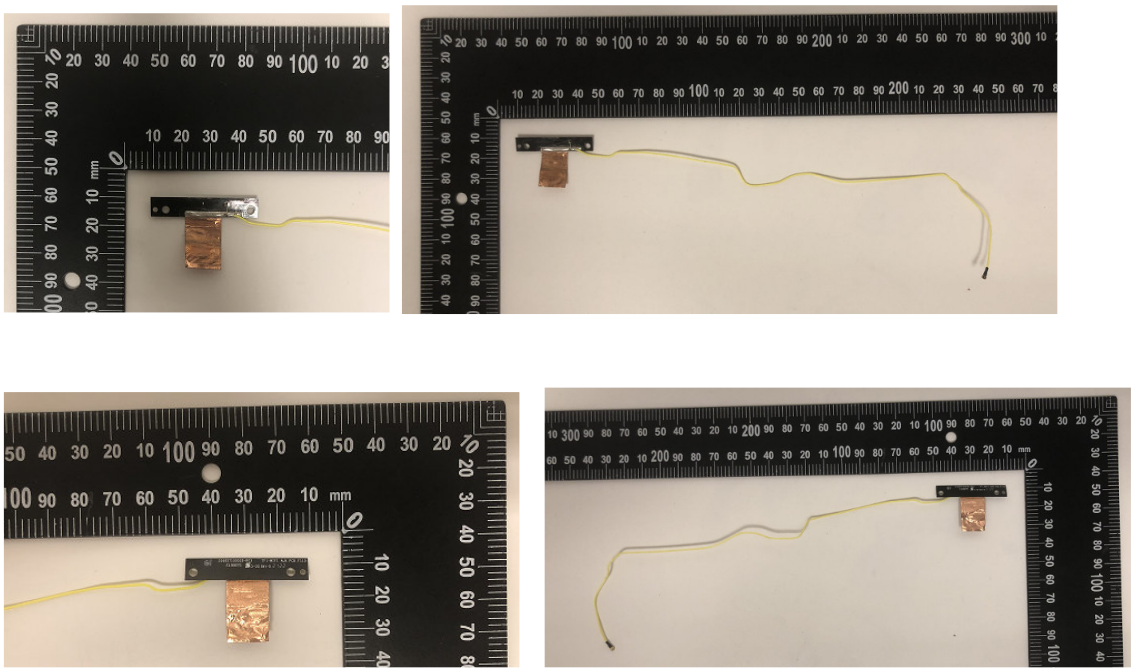

Section 3. Radiation characteristics of antenna loaded in Host Platform

Main Antenna

Max Antenna 3D Radiation Pattern 2400 – 2483.5 MHz

Frequency (MHz)	Peak Gain w/ Cable Loss (dBi)
2400-2483.5	1.86

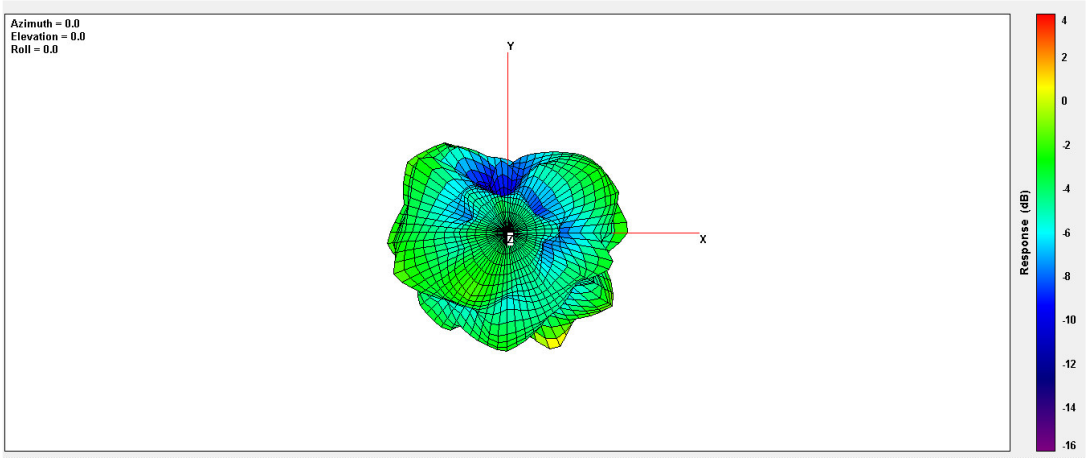

Max Antenna 3D Radiation Pattern 5150-5250 MHz

Frequency (MHz)	Peak Gain w/ Cable Loss (dBi)
5150-5250	2.15

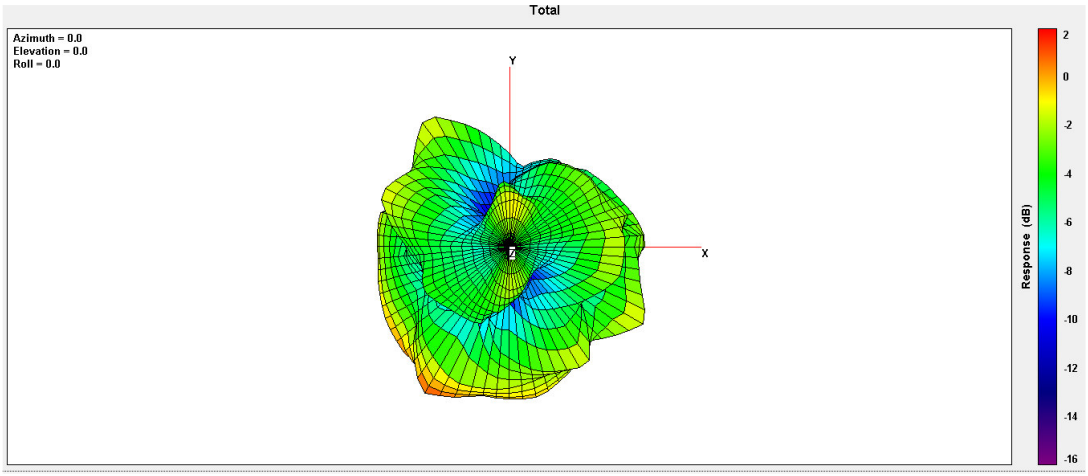

Max Antenna 3D Radiation Pattern 5250-5350 MHz

Frequency (MHz)	Peak Gain w/ Cable Loss (dBi)
5250-5350	2.07

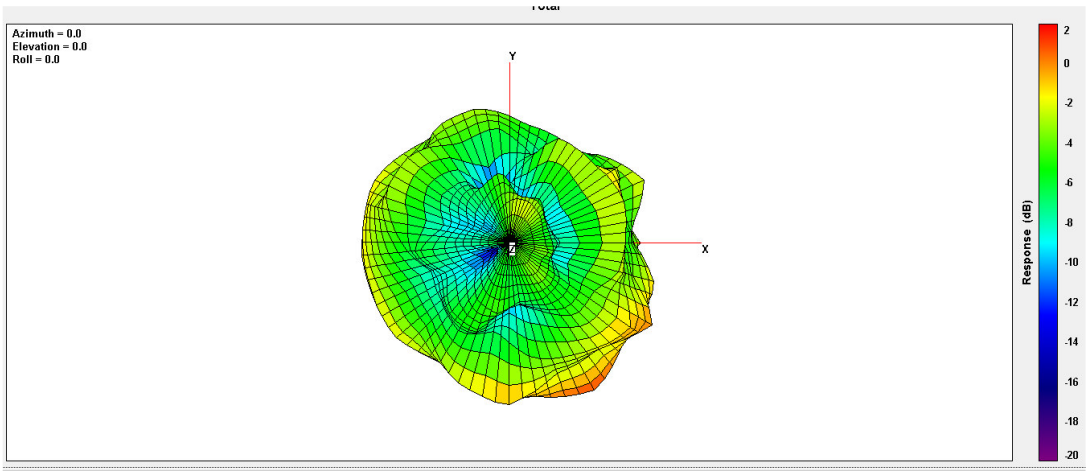

Max Antenna 3D Radiation Pattern 5470-5725 MHz

Frequency (MHz)	Peak Gain w/ Cable Loss (dBi)
5470-5725	1.74

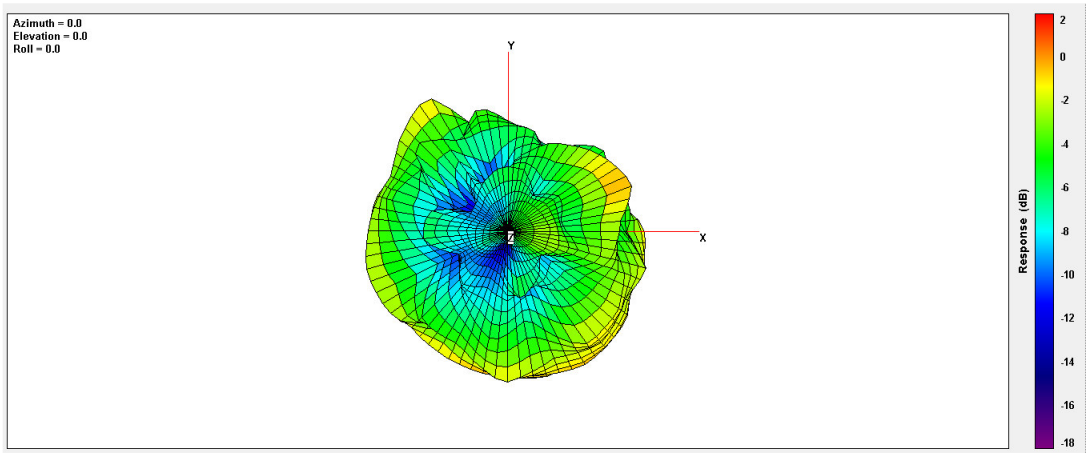

Max Antenna 3D Radiation Pattern 5725-5850 MHz

Frequency (MHz)	Peak Gain w/ Cable Loss (dBi)
5725-5850	1.40

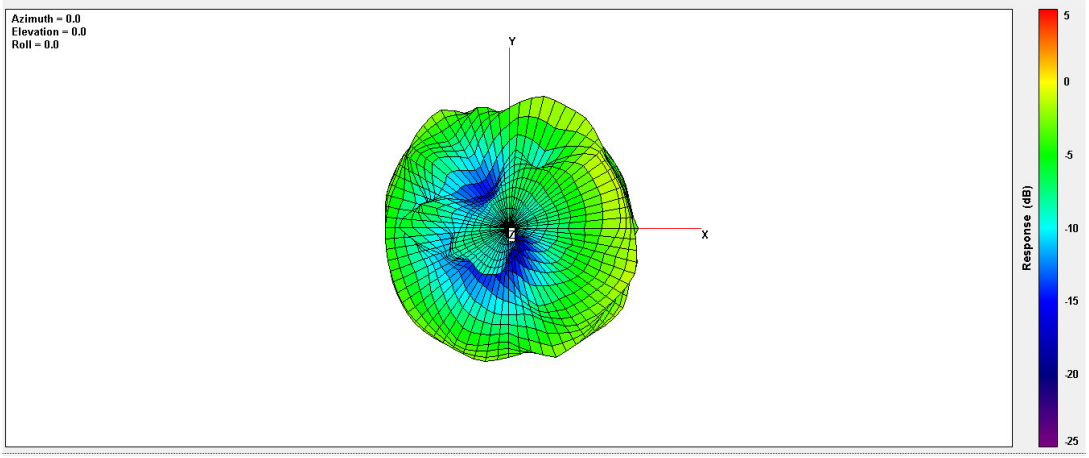

Max Antenna 3D Radiation Pattern 5850-5895 MHz

Frequency (MHz)	Peak Gain w/ Cable Loss (dBi)
5850-5895	-0.09

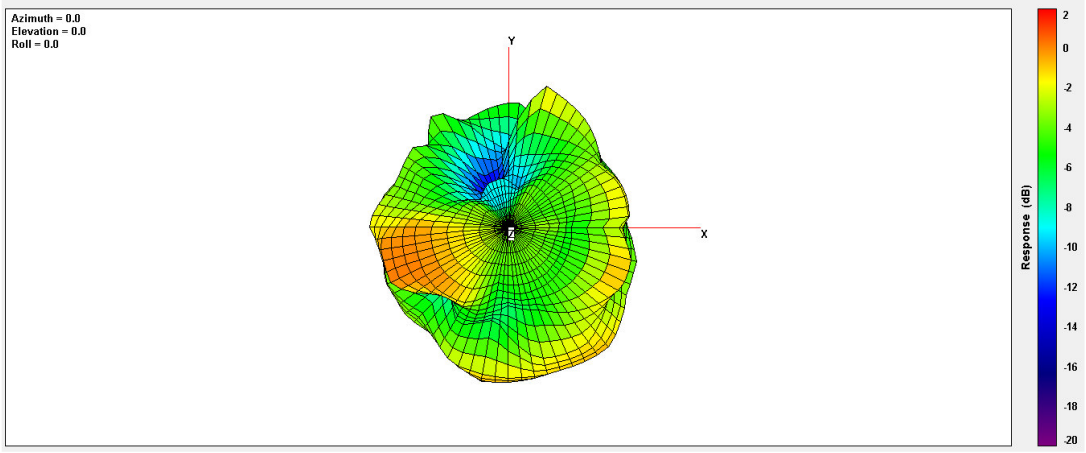

Auxiliary Antenna

Max Antenna 3D Radiation Pattern 2400 – 2483.5 MHz

Frequency (MHz)	Peak Gain w/ Cable Loss (dBi)
2400-2483.5	1.83

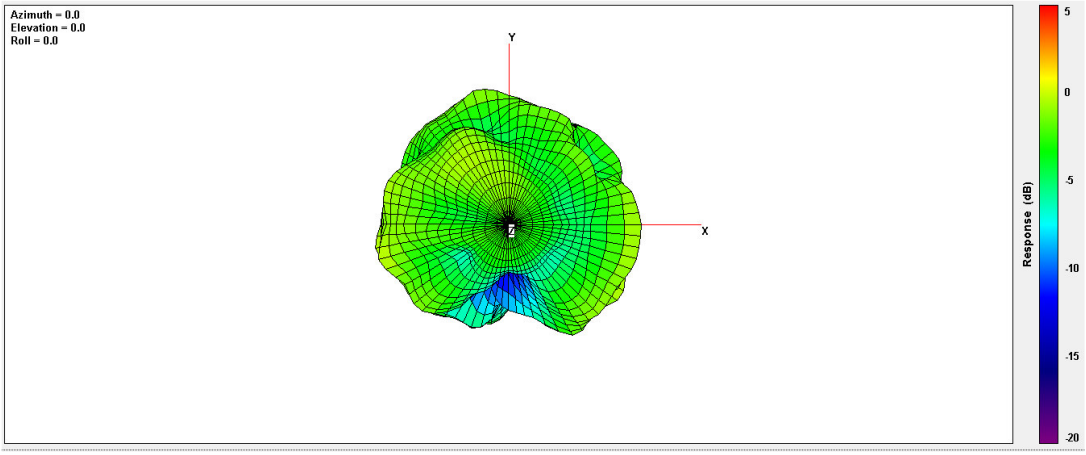

Max Antenna 3D Radiation Pattern 5150-5250 MHz

Frequency (MHz)	Peak Gain w/ Cable Loss (dBi)
5150-5250	0.58

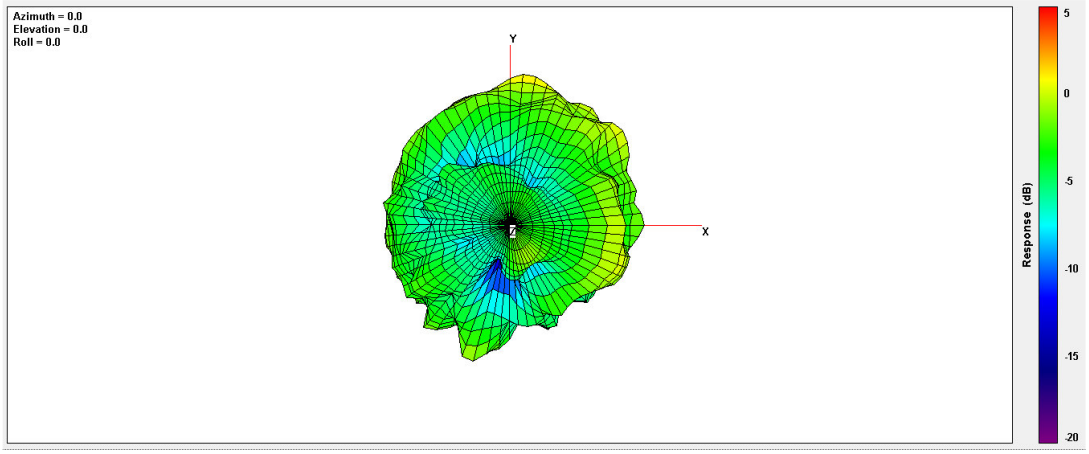

Max Antenna 3D Radiation Pattern 5250-5350 MHz

Frequency (MHz)	Peak Gain w/ Cable Loss (dBi)
5250-5350	0.58

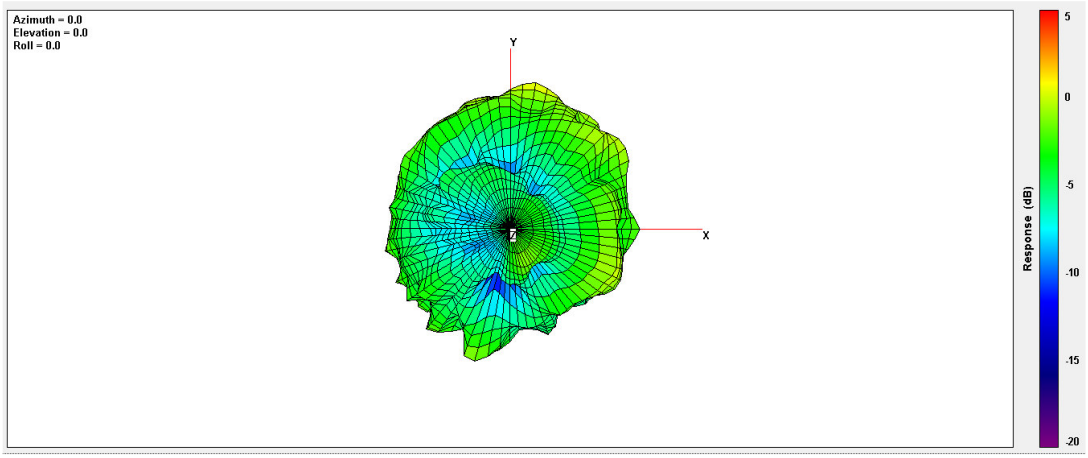

Max Antenna 3D Radiation Pattern 5470-5725 MHz

Frequency (MHz)	Peak Gain w/ Cable Loss (dBi)
5470-5725	0.80

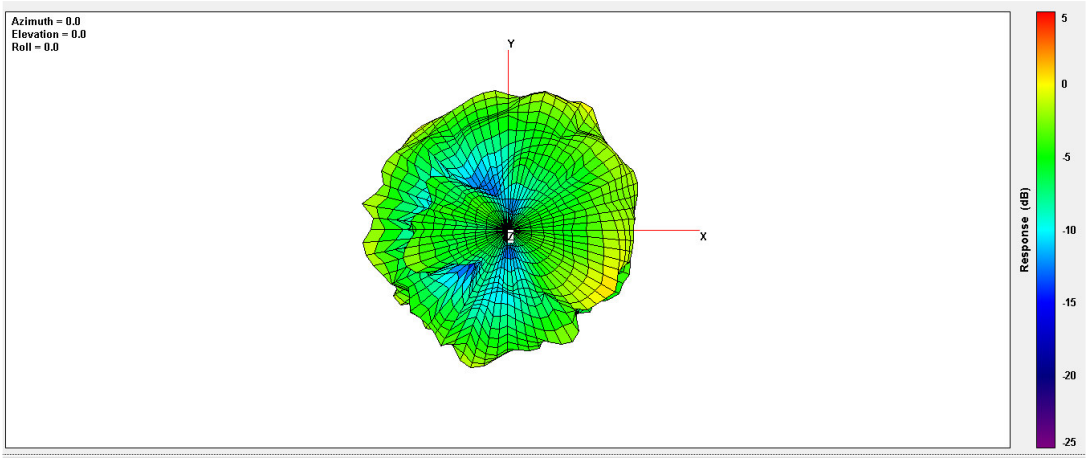

Max Antenna 3D Radiation Pattern 5725-5850 MHz

Frequency (MHz)	Peak Gain w/ Cable Loss (dBi)
5725-5850	1.11

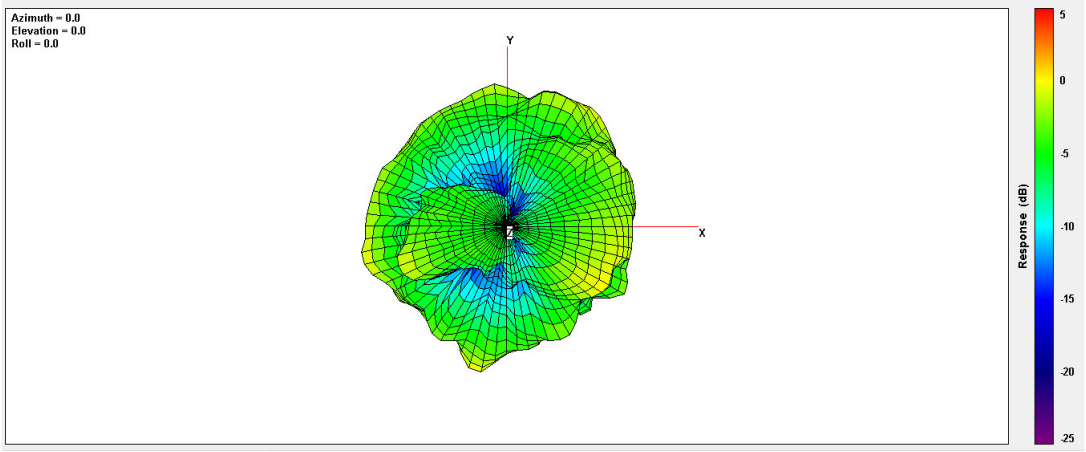

Max Antenna 3D Radiation Pattern 5850-5895 MHz

Frequency (MHz)	Peak Gain w/ Cable Loss (dBi)
5850-5895	1.11

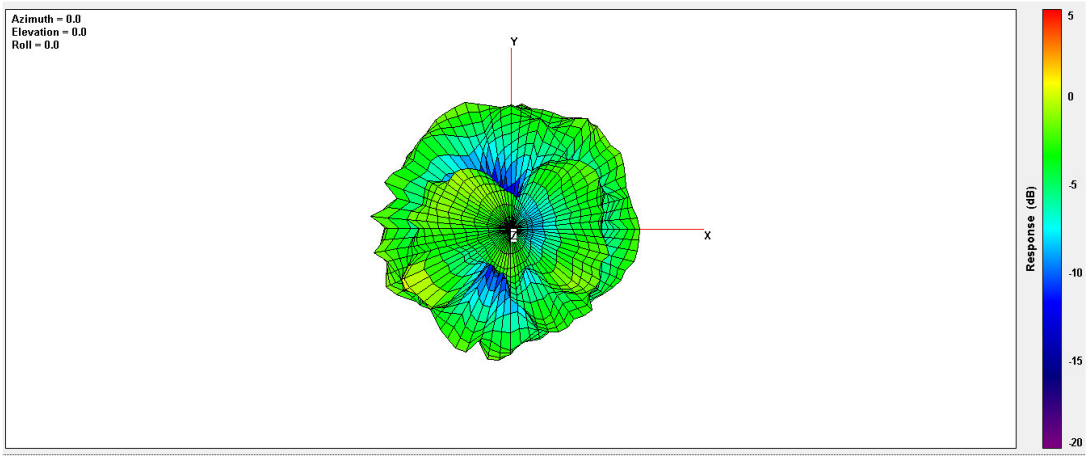

Section 4. Antenna Host Platform Location Information

Include a **dimensioned photo(s) or dimensioned drawing(s)** of Main and Aux antenna placements (measurements are not required for receive-only antenna).
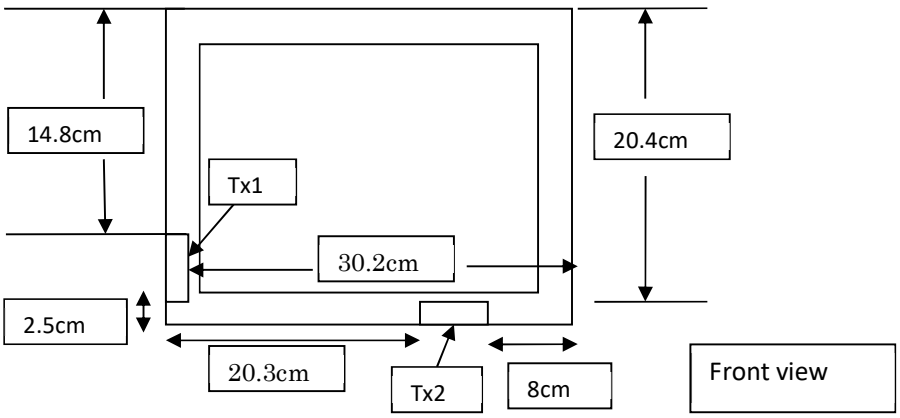
Any antenna that transmits must show dimensions to bottom of laptop. Provide a description of the materials that are used for supporting or surrounding transmit antennas; for example, non-conductive plastics vs. conductive coated plastic or metallic materials.