Getac

A140

USER MANUAL

January 2019

TRADEMARKS

The Bluetooth® word mark and logos are registered trademarks owned by Bluetooth SIG, Inc.
All brand and product names are trademarks or registered trademarks of their respective companies.

NOTE

The information in this manual is subject to change without notice.
For the latest version of the manual, please visit the Getac website at www.getac.com.

Table of Contents

Chapter 1 **Getting Started** **1**

Getting the Tablet PC Running 2

Unpacking 2

Installing the Micro-SIM Card (Optional) and Battery Packs 2

Connecting to AC Power 4

Using the Tether 4

Turning On and Off the Tablet PC 6

Taking a Look at the Tablet PC 7

Front Components 7

Rear Components 10

Right-Side Components 11

Left-Side Components 11

Top Components 13

Bottom Components 13

Chapter 2 **Operating Your Tablet PC** **14**

Using the Touchscreen 15

Using Multi-touch Gestures 16

Using Network and Wireless Connections 18

Using the LAN 18

Using the WLAN 19

Using the Bluetooth Feature 21

Using the WWAN Feature (Optional) 22

Using the GPS Feature (Optional) 25

Using the Barcode Scanner (Optional) 26

Using the Fingerprint Scanner (Optional) 27

Enrolling a Fingerprint 27

Fingerprint Login 28

Using the NFC/RFID Reader (Optional) 30

Chapter 3 **Managing Power** **31**
AC Adapter 32
Battery Pack 33
Charging the Battery Pack 33
Initializing the Battery Pack 34
Checking the Battery Level 34
Battery Low Signals and Actions 35
Replacing the Battery Pack 36
Power-Saving Tips 38

Chapter 4 **Expanding Your Tablet PC** **39**
Connecting Peripheral Devices 40
Connecting a USB Device 40
Connecting a USB Device with Fischer Connectors (Optional) 41
Connecting an Audio Device 41
Connecting a Monitor 42
Connecting a Serial Device (Optional) 42
Using Storage and Expansion Cards 43
Using MicroSD Cards 43
Using Smart Cards 44
Changing or Replacing 45
Replacing the SSD 45
System Memory Upgrade 47

Chapter 5 **Using BIOS Setup** **49**
When and How to Use 50
Menu Descriptions 51
Information Menu 51
Main Menu 51
Advanced Menu 52
Security Menu 53
Boot Menu 54
Exit Menu 54

Chapter 6 **Using Getac Software** **56**
OSD Control Panel 57
G-Manager 58
Camera (Optional) 59
G-Camera (for Windows 10) 59
Getac Camera (for Windows 7) 60

Chapter 7 **Care and Maintenance** **61**
Protecting the Tablet PC 62
Using an Anti-Virus Strategy 62
Using the Cable Lock 62
Taking Care of the Tablet PC 63
Location Guidelines 63
General Guidelines 63
Cleaning Guidelines 64
Battery Pack Guidelines 64
Touchscreen Guidelines 65
When Traveling 67

Chapter 8 **Troubleshooting** **68**
Preliminary Checklist 69
Solving Common Problems 70
Battery Problems 70
Bluetooth Wireless Transmission Problems 70
Display Problems 71
Hardware Device Problems 71
Power Management Problems 72
Sensor Problems (for Windows 10 Models Only) 72
Software Problems 73
Sound Problems 73
Startup Problems 74
WLAN Problems 74
Other Problems 76
Resetting the Tablet PC 77
System Recovery 78
Windows 10 Models 78
Windows 7 Models 80
Using the Driver Disc (Optional) 82

Appendix A **Specifications** **83**

Appendix B **Regulatory Information** **85**
On the Use of the System 86
Class B Regulations 86
ANSI Warning 87
Safety Notices 88
On the Use of the RF Device 91
USA and Canada Safety Requirements and Notices 91
European Union CE Marking and Compliance Notices 92

User Notification of Take-back Service 95
ENERGY STAR 7.0 96
Battery Recycling 98

Chapter 1

Getting Started

This chapter first tells you step by step how to get the Tablet PC up and running. Then, you will find a section briefly introducing the external components of the Tablet PC.

Getting the Tablet PC Running

Unpacking

After unpacking the shipping carton, you should find these standard items:

● A140 Tablet PC	
● AC adapter	● AC power cord
● Battery pack x 2	● Stylus
	● Tether
● Document(s)	● Driver disc (optional)

Inspect all the items. If any item is damage or missing, notify your dealer immediately.

Installing the Micro-SIM Card (Optional) and Battery Packs

1. Select models only:

   With the mirco-SIM card's chip side facing up and the beveled corner pointing to the slot, insert the card all the way into the slot.

NOTE: To remove the micro-SIM card, just push in the card to release it and then pull it out.

2. The Tablet PC has two battery compartments for two battery packs; each is installed in the same way.

   With the battery pack correctly oriented, attach its connector side to the battery compartment at an angle (❶) and then press down the other side (❷).

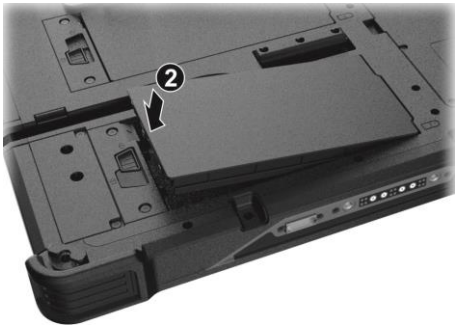

3. Slide the battery latch toward the locked position (🔒).

CAUTION: Make sure the battery latch is correctly locked, not revealing the underneath red part.

Correct

Incorrect (revealing red part)

Connecting to AC Power

CAUTION: Use only the AC adapter included with your Tablet PC. Using other AC adapters may damage the Tablet PC.

NOTE:

- The battery pack is shipped to you in power saving mode that protects it from charging/discharging. It will get out of the mode to be ready for use when you install the battery pack and connect AC power to the Tablet PC for the very first time.
- When the AC adapter is connected, it also charges the battery pack. For information on using battery power, see Chapter 3.

You must use AC power when starting up the Tablet PC for the very first time.

1. Plug the DC cord of the AC adapter to the power connector of the Tablet PC (❶).

2. Plug the female end of the AC power cord to the AC adapter and the male end to an electrical outlet (❷).

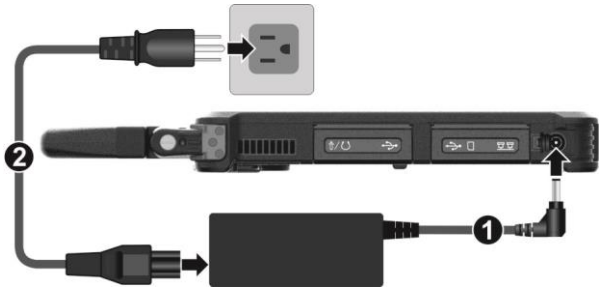

3. Power is being supplied from the electrical outlet to the AC adapter and onto your Tablet PC. Now, you are ready to turn on the Tablet PC.

Using the Tether

A tether is provided for attaching the stylus to your Tablet PC.

1. Insert one of the tether's loop ends through the hole of the stylus (as indicated by ❶ below). Then, insert the other end through the first loop (as indicated by ❷ below) and pull it tight.

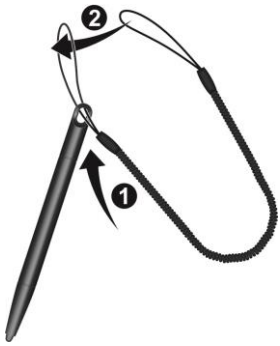

2. Insert the other loop end to the tether hole on the Tablet PC (as indicated by ❶ below). Then, insert the stylus end through the loop (as indicated by ❷ below) and pull it tight.

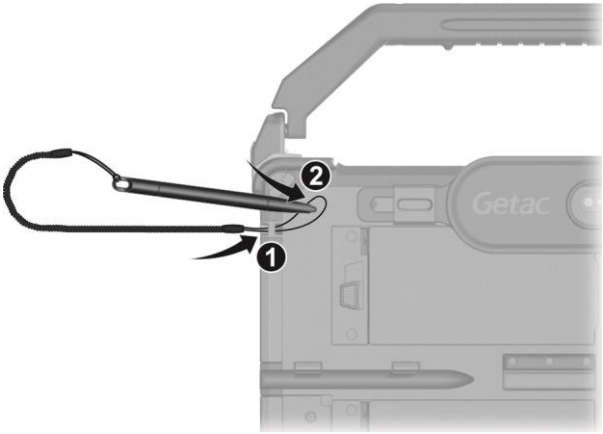

Turning On and Off the Tablet PC

Turning On

Press the power button (⏻). The Windows operating system should start.

NOTE: Tapping the screen during startup may invoke a pre-boot menu (unless the default settings have been changed). If the menu appears, simply select Continue.

Turning Off

When you finish a working session, you can stop the system by turning off the power or leaving it in Sleep or Hibernation mode:

To...	Do this...	
	Windows 10	Windows 7
Power off (Shutdown)	Tap ⊞ → ⏻ Power → Shut down.	Use the Windows Start menu in the lower left and follow the shutdown procedure.
Sleep	Press the power button.* -or- Tap ⊞ → ⏻ Power → Sleep.	Press the power button.* -or- Use the Windows Start menu to put the Tablet PC in Sleep mode.
Hibernate	By default, this option is not shown in the Start menu. If you want to use the feature, set up accordingly in Windows settings.	Use the Windows Start menu to put the Tablet PC in Hibernation mode.

* "Sleep" is the default setting of the power button. You may change what the power button does in Windows settings.

Taking a Look at the Tablet PC

NOTE: Depending on the model you purchased, the appearance of your Tablet PC may not be exactly the same as those shown in this manual.

CAUTION: You need to open the protective covers to access the connectors. When not using a connector, make sure to close the cover completely for water-, and dust-proof integrity. (Engage the locking mechanism if existing.)

Front Components

Ref	Component	Description
❶	**Handle** (optional)	Provides a convenient way to carry the Tablet PC.
		Also serves as a stylus holder. The handle has a slot and two holes for the stylus. You can use any one for storing the stylus.
❷	**Light sensor**	Senses the ambient light for automatic adjustments of the display backlight.

Ref	Component	Description
❸	**Camera indicator** (optional)	Lights up when the camera lens beside it is in use.
❹	**Camera lens** (optional)	Allows you to use the camera function. Slide the camera cover toward the right to use the camera; slide it toward the left for privacy protection.
❺	**Touchscreen**	Displays and receives information for the Tablet PC.
❻	**Indicators**	
	Power	Lights blue when the power is on.
		Blinks blue when the system is in Sleep mode.
	Battery	Lights amber when the battery is being charged.
		Lights green when battery charging is completed.
		Blinks green to indicate the battery's built-in high temperature protection mechanism is activated. **CAUTION:** Do not remove the battery during this period.
		Blinks red (once per second) when the battery's capacity is below 10%.
		Blinks red rapidly (once per 0.5 second) when there is a thermal protection problem. Ask for repair service in case this happens.
		Blinks amber when the battery charging is in an abnormal state. Replace the battery in case this happens.
	RF (Radio Frequency)	Lights blue when the RF radio of any RF feature (WLAN/Bluetooth/WWAN) is on.
❼	**Power button**	Turns the power on or off. (The default "off" state is "Sleep mode.")
❽	**Plus button**	Increases the sound volume.
❾	**Minus button**	Decreases the sound volume.
❿	**Windows logo button**	Opens or closes the Start menu.

Ref	Component	Description
⓫	P1 button	For Windows 10: Starts the G-Camera application.
		For Windows 7: Starts the Getac Camera program and serves as the shutter release button.
⓬	P2 button	Opens or closes the OSD Control Panel.
		When pressed longer: Serves as the **Ctrl**+**Alt**+**Del** keyboard keys.
⓭	P3 button	Enables or disables the auto rotate function of the screen.
⓮	P4 button	Serves as the trigger button for the barcode reader if your model has the module.
⓯	**Microphone**	Receives sound and voice to record voice.

NOTE:

- The hardware buttons (except the power button) can be re-defined using G-Manager.
- Some of the hardware buttons provide keyboard key functions on "POST/BIOS Setup/Non-ACPI" occasions. (See "Button Functions on Special Occasions" in Appendix A for information.)

Rear Components

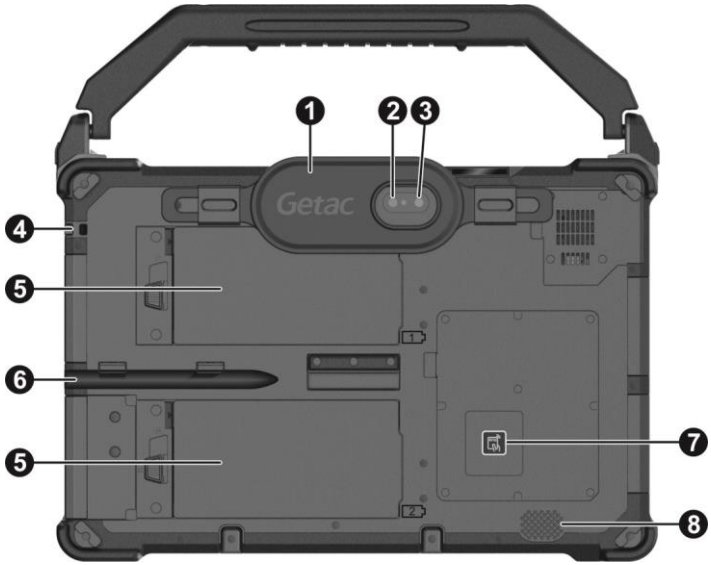

Ref	Component	Description
❶	**Hand strap** (optional)	Allows you to hold your Tablet PC securely while operating.
❷	**Camera lens** (optional)	Allows you to use the camera function. When the camera lens is in use, the indicator beside it lights up.
❸	**Flash** (optional)	Provides extra light when taking pictures.
❹	**Tether hole**	Stylus can be tethered to this hole.
❺	**Battery pack**	Supplies power to your computer when external power is not connected.
❻	**Stylus holder**	Holds the stylus.
❼	NFC/RFID reader (optional)	Reads data from NFC/RFID tags.
❽	**Speaker**	Sends out sound and voice from your Tablet PC.

Right-Side Components

Slide up to open the protective cover.

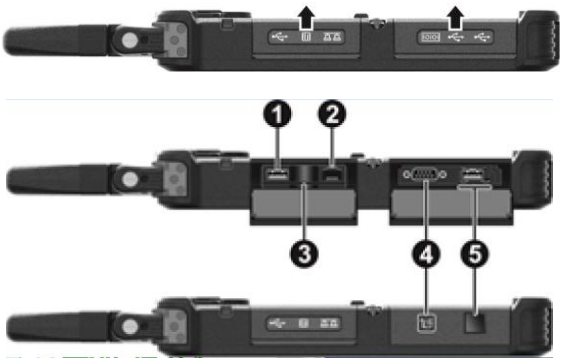

Ref	Component	Description
1	**USB 2.0 port**	Connects a USB device.
2	**RJ-45 connector** (LAN2)	Connects the LAN cable.
3	**Smart card reader**	Accepts a smart card for additional security feature.
4	Depending on the model, the component can be one of the following:	
	None	
	RS232 serial connector	Connects a serial mouse or serial communication device.
	VGA connector	Connects an external display monitor.
	NFC/RFID reader	Reads data from NFC/RFID tags.
5	Depending on the model, the component can be one of the following:	
	None	
	Fingerprint scanner	Serves as the fingerprint verification, preventing unauthorized access to your Tablet PC.

Left-Side Components

Slide up to open the protective cover.

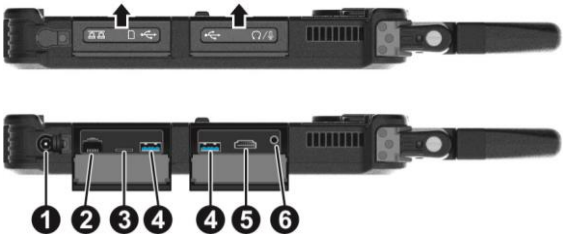

Ref	Component	Description
❶	**Power connector**	Connects the AC adapter.
❷	**RJ-45 connector** (LAN1)	Connects the LAN cable.
❸	**MicroSD card slot**	Accepts a microSD card for removable storage media.
❹	**USB 3.0 port**	Connects a USB device.
❺	**HDMI connector**	Connects a HDMI monitor or TV set.
❻	**Combo audio connector**	Connects a set of headphones or external speakers with amplifier
		Supports a headset microphone with 4-pole TRRS 3.5mm jack.

Top Components

Ref	Component	Description
❶	**Stylus holder**	Holds the stylus.
❷	Barcode reader lens (optional)	Scans and reads barcodes.

Bottom Components

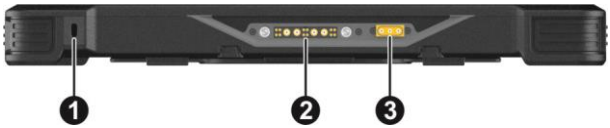

Ref	Component	Description
❶	**Kensington lock**	Locks the Tablet PC to a stationary object for security.
❷	**Docking connector**	Connects to the docking station (available as an option).
❸	**Antenna pass-through** (optional)	Connects to the docking station for using external GPS /WLAN/WWAN antenna. 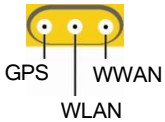

Chapter 2

Operating Your Tablet PC

This chapter provides information about the use of the Tablet PC.

If you are new to computers, reading this chapter will help you learn the operating basics. If you are already a computer user, you may choose to read only the parts containing information unique to your Tablet PC.

CAUTION:

- Do not expose your skin to the Tablet PC when operating it in a very hot or cold environment.
- The Tablet PC can get uncomfortably warm when you use it in high temperatures. As a safety precaution in such a circumstance, do not place the Tablet PC on your lap or touch it with your bare hands for extended periods of time. Prolonged body contact can cause discomfort and potentially a burn.

Using the Touchscreen

CAUTION: Do not use a sharp object such as a ballpoint pen or pencil on the touchscreen. Doing so may damage the touchscreen surface. Use the included stylus or your finger.

NOTE: An optical film has been attached to the screen before shipment. The film is a consumable, which will be worn out by possible scratches. You can purchase a new one when replacement is required.

Your Tablet PC has a capacitive touchscreen. This type of touchscreen responds to objects that have conductive properties, such as fingertips and a capacitive-tipped stylus.

You can change the touchscreen sensitivity settings to suit your scenario. Double-tap the Touch Screen Mode shortcut on Windows desktop to open the settings menu and select one of the options (as shown below).

Select this if you prefer using fingertips. Also, select this when raindrops are falling on the screen and should be rejected as input.

Select this if you are wearing gloves (referring to warm gloves or work gloves, not referring to touchscreen-capable gloves).

Select this if you are using the stylus. (You must use the one supplied with your model.)

NOTE:

- In high temperatures (above 60 °C / 140 °F), set the mode to Touch instead of Glove or Pen mode.
- If liquid is spilled on the touchscreen causing a wet area, the area will stop responding to any inputs. For the area to function again, you must dry it.

The following table shows how you use the touchscreen to obtain equivalent mouse functions.

Term/Action	Equivalent Mouse Function
Tap: Touch the screen once.	Click/Point
Double-tap: Touch the screen twice rapidly.	Double-click
Tap and hold: Tap and hold until a popup menu appears.	Right-click
Drag: Hold the stylus (or finger) on the screen and drag across the screen until reaching your destination.	Drag

Using Multi-touch Gestures

You can interact with your Tablet PC by placing two fingers on the screen. The movement of the fingers across the screen creates "gestures," which send commands to the Tablet PC.

Here are the multi-touch gestures that you can use:

Gestures	Actions (= finger down; = finger up)	Descriptions
Pan (Scroll)	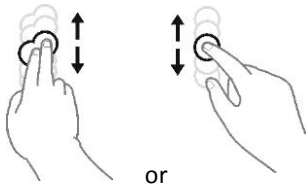 or Drag 1 or 2 fingers up or down.	Use panning to see another part of a page that has scroll bars.
Zoom (Pinch)	Move two fingers apart/toward each other.	Use zooming to make an item (a photo for example) on the screen larger or smaller. The gesture works in applications that support mouse wheel zooming.

Gestures	Actions = finger down; = finger up)	Descriptions
Rotate	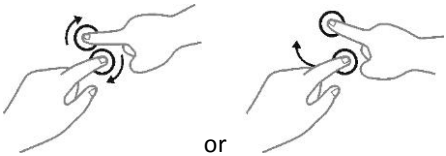 Move two fingers in opposing directions. -or- Use one finger to pivot around another.	Use rotating to move a picture or other item on the screen in a circular direction (clockwise or counter-clockwise). The gesture works in applications that support the specific gesture.
Press and Tap	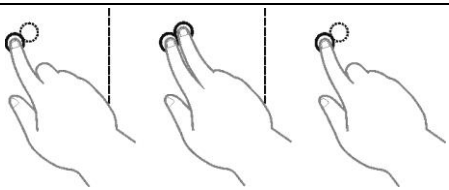 Press on target and tap using a second finger.	Use press and tap to access the shortcut menu.
Two-finger Tap	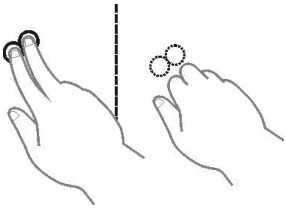 Tap two fingers at the same time (where the target is in the midpoint between the fingers).	The function is defined by applications that support the specific gesture.
Flicks	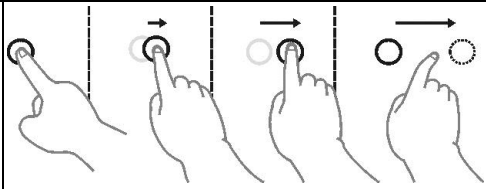 Make quick drag gestures in the desired direction.	Flick left or right to navigate back and forward in a browser and other applications. The gesture works in most applications that support back and forward.

Using Network and Wireless Connections

Using the LAN

Your Tablet PC has two LAN modules so you can connect to two networks at the same time.

To connect the network cable to the LAN module, connect one end of the LAN cable to the RJ-45 connector on the Tablet PC and the other end to the network hub.

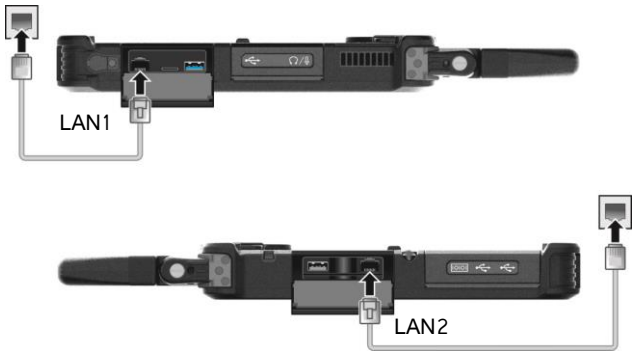

NOTE: If your model's CPU supports vPro, use LAN1 for the vPro feature.

Using the WLAN

The WLAN (Wireless Local Area Network) module supports IEEE 802.11ac, compatible with 802.11a/b/g/n.

NOTE: Do not block the antenna area.

Turning On/Off the WLAN Radio

To turn on the WLAN radio:

For Windows 10: Tap → Settings → Network & Internet → Wi-Fi. Slide the Wi-Fi switch to the On position.

For Windows 7: Use either Windows Mobility Center or Getac Quick Bar. To open Getac Quick Bar, tap and hold the Getac Utility icon on Windows taskbar and select **Quick Bar**. Tap the WLAN button in the Quick Bar (an X over the button means the radio is currently off).

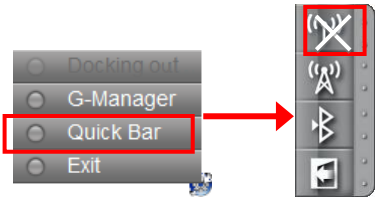

To turn off the WLAN radio:

You can turn off the WLAN radio the same way you turn it on.

If you want to quickly turn off all wireless radio, simply switch on Airplane mode. You can control the Airplane mode using one of the below methods.

- Use the Airplane Mode button in the OSD Control Panel.
- **For Windows 10**: Tap → Settings → Network & Internet → Airplane mode.

Connecting to a WLAN Network

1. Make sure that the WLAN function is enabled (as described above).
2. **For Windows 10:** Tap the network icon in the lower right of the task bar.

   For Windows 7: Tap the Wireless Network icon on the taskbar. (An orange light in the icon indicates connections are available.)
3. In the list of available wireless networks, tap a network, and then tap **Connect**.
4. Some networks require a network security key or passphrase. To connect to one of those networks, ask your network administrator or Internet service provider (ISP) for the security key or passphrase.

For more information on setting a wireless network connection, refer to Windows online help.

NOTE: You can use Intel® PROSet Wireless to take full advantage of the Wi-Fi capabilities of your Tablet PC. See the Help of the utility for instructions.

Using the Bluetooth Feature

The Bluetooth technology allows short-range wireless communications between devices without requiring a cable connection. Data can be transmitted through walls, pockets and briefcases as long as two devices are within range.

NOTE: Do not block the antenna area.

Turning On/Off the Bluetooth Radio

To turn on the Bluetooth radio:

For Windows 10: Tap → Settings → Devices → Bluetooth. Slide the Bluetooth switch to the On position.

For Windows 7: Use Getac Quick Bar. To open Getac Quick Bar, tap and hold the Getac Utility icon on Windows taskbar and select **Quick Bar**. Tap the Bluetooth button in the Quick Bar (an X over the button means the radio is currently off).

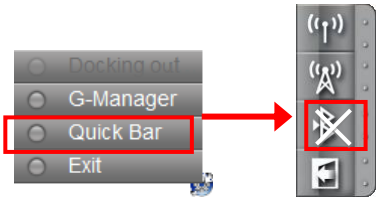

To turn off the Bluetooth radio:

You can turn off the Bluetooth radio the same way you turn it on.

If you want to quickly turn off all wireless radio, simply switch on Airplane mode. You can control the Airplane mode using one of the below methods.

- Use the Airplane Mode button in the OSD Control Panel.
- **For Windows 10**: Tap → Settings → Network & Internet → Airplane mode.

Connecting to another Bluetooth Device

1. Make sure that the Bluetooth function is enabled (as described above).
2. Make sure that the target Bluetooth device is turned on, discoverable and within close range. (See the documentation that came with the Bluetooth device.)
3. **For Windows 10:** Tap → Settings → Devices →Bluetooth.

   For Windows 7: Tap and hold the Bluetooth icon on Windows taskbar. Tap Add a Device.
4. Select the device you want to connect from the search results.
5. Depending on the type of Bluetooth device that you want to connect to, you will need to enter the pertinent information.

For detailed information on using the Bluetooth feature, see Windows' online Help.

Using the WWAN Feature (Optional)

A WWAN (Wireless Wide Area Network) uses mobile telecommunication cellular network technologies to transfer data. The WWAN module of your Tablet PC supports 3G and 4G LTE.

NOTE:

- Your model only supports data transmission. Voice transmission is not supported.
- For instructions on installing the SIM card, see "Installing the Micro-SIM Card (Optional) and Battery Packs" in Chapter 1.
- Do not block the antenna area.

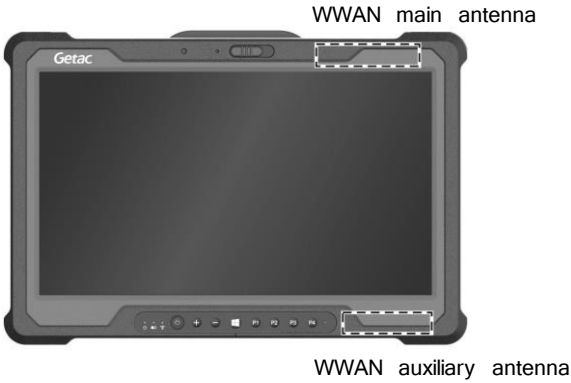

Turning On/Off the WWAN Radio

To turn on the WWAN radio:

For Windows 10: Tap → Settings → Network & Internet → Airplane mode. Slide the Cellular switch to the On position.

For Windows 7: Use the WWAN utility software or Getac Quick Bar. To open Getac Quick Bar, tap and hold the Getac Utility icon on Windows taskbar and select **Quick Bar**. Tap the WWAN button in the Quick Bar (an X over the button means the radio is currently off).

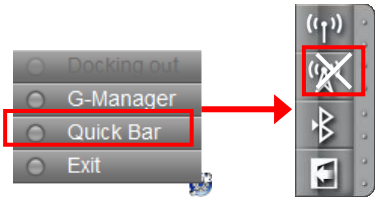

To turn off the WWAN radio:

You can turn off the WWAN radio the same way you turn it on.

If you want to quickly turn off all wireless radio, simply switch on Airplane mode. You can control the Airplane mode using one of the below methods.

- Use the Airplane Mode button in the OSD Control Panel.
- **For Windows 10**: Tap → Settings → Network & Internet → Airplane mode.

Setting up a WWAN Connection

For Windows 10: Tap → Settings → Network & Internet → Cellular. (For detailed information on cellular settings in Windows 10, see Microsoft Support website.)

For Windows 7: Start the WWAN utility software (**Skylight**). You can use the WWAN utility software to configure and use WWAN connections. (See the online help of the software for information.)

Using the GPS Feature (Optional)

GPS (Global Positioning System) technology allows you to pinpoint the geographic location of the computer and use the data for navigational and other purposes.

NOTE:

- You need to install third-party software to take full advantage of the GPS feature.
- Do not block the antenna area.

You can view GPS information by running the G-Manager program and selecting the **GPS Status** tab.

Using the Barcode Scanner (Optional)

NOTE:

- For enhanced applications and customization of the module, you can use the Barcode Manager program. (For detailed information on the program, see the program's online help.)
- The maximum operating temperature for the barcode scanner is 50 °C (122 °F).

If your model has the barcode scanner module, you can scan and decode most common 1D and 2D symbologies.

To read barcodes:

1. Start your processing software and open a new or existing file. Place the insertion point (or called cursor) where you want the data to be entered.

2. Press the Trigger button (P4) on your Tablet PC.

3. The barcode scanner shines red light with a center red dot. Aim the red dot at the center of the barcode. The red light should cover the entire barcode. Adjust the lens' distance from the barcode, shorter for a smaller barcode and farther for a larger one.

NOTE: Improper ambient light and scanning angle can affect the scanning results.

4. Upon a successful scan, the system beeps and the decoded barcode data is entered.

Using the Fingerprint Scanner (Optional)

CAUTION:

- For optimal performance, both the scanning surface and the finger should be clean and dry. Clean the scanning surface when needed. You can use adhesive tape to remove dirt and oil from the scanner surface.
- It is not recommended that you use the fingerprint scanner in a below-freezing temperature. The moisture on your finger can freeze to the scanner's metal surface when you touch it, resulting in a failed operation. Besides, touching freezing metal with your finger can cause frostbite.

The fingerprint scanner provides a strong authentication mechanism based on fingerprint recognition. You can log on to Windows and dismiss the lock screen with an enrolled fingerprint instead of a password.

Enrolling a Fingerprint

NOTE: You can enroll a fingerprint only after creating a password for the Windows user account.

For Windows 10

1. Click → Settings → Accounts → Sign-in options.
2. On the right side under Fingerprint, click Set up.
3. Follow the onscreen instructions to complete.

For Windows 7

1. Log in to Windows as the user whose fingerprint is to be enrolled.
2. Double-click iMD Fingerprint Reader on Windows desktop.
3. In the fingerprint configuration menu, click Add another.

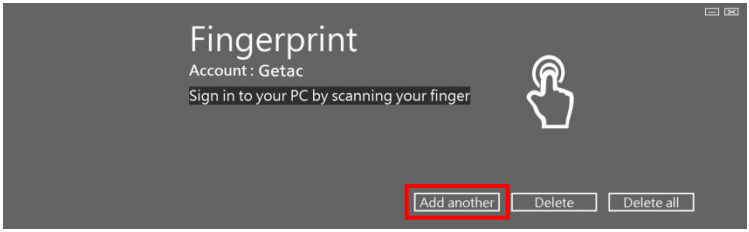

4. You will be asked to enter the password of the selected user. Enter the password and click OK.

5. Place any finger of your choice on the scanner surface. Keep the finger still until you're asked to lift your finger and repeat the action again. Several scans of the fingerprint are required.

NOTE: Place your finger in a natural position that matches the way you normally hold your device.

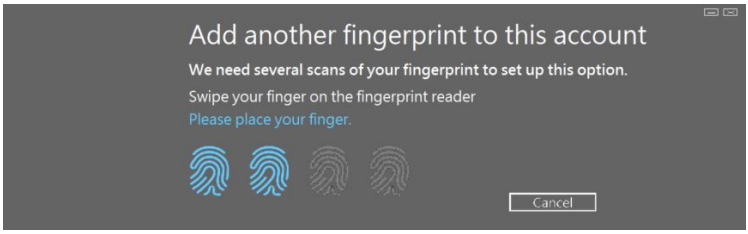

6. When completed, click **Finish**.

NOTE: For detailed information on the program, see the program's online help.

Fingerprint Login

NOTE:

- The fingerprint login process can take a while. This is because the system has to check hardware devices and security configuration before initiating the fingerprint scanner.
- The fingerprint scanner has 360-degree readability. You can place your finger in any orientation for the scanner to recognize an enrolled fingerprint.

With an enrolled fingerprint, the user can log on by tapping the Fingerprint option in Windows login screen and then placing the finger on the scanner. The user can also dismiss the lock screen with the fingerprint.

If fingerprint login attempts fail three times, you will be switched to password login.

Using the NFC/RFID Reader (Optional)

The NFC/RFID reader can read data from NFC (Near Field Communication) and RFID (Radio Frequency Identification) tags.

The NFC/RFID reader is enabled by default. To enable or disable the reader, run the BIOS Setup program and select Advanced → Device Configuration → RFID Card Reader. (See Chapter 5 for information on BIOS Setup.)

For optimal results when reading an NFC/RFID tag, have the tag face the antenna in the same orientation as indicated by the icon on the exterior of the Tablet PC. The icon indicates where the RFID antenna is located. The location depends on your model.

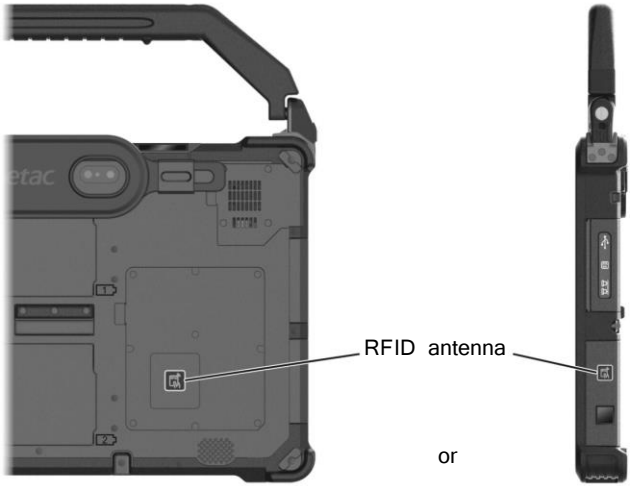

NOTE:

- When not using an NFC/RFID card, do not leave it within or near the antenna area.
- For enhanced applications and customization of the module, contact your authorized Getac dealer.
- The NFC reader requires specialized applications. For further information, ask your system administrator.
- The tablet models with this option do not comply with ENERGY STAR®.

Chapter 3

Managing Power

Your Tablet PC operates either on external AC power or on internal battery power.

This chapter tells you how you can effectively manage power. To maintain optimal battery performance, it is important that you use the battery in the proper way.

AC Adapter

CAUTION:

- The AC adapter is designed for use with your Tablet PC only. Connecting the AC adapter to another device can damage the adapter.
- The AC power cord supplied with your Tablet PC is for use in the country where you purchased your Tablet PC. If you plan to go overseas with the Tablet PC, consult your dealer for the appropriate power cord.
- When you disconnect the AC adapter, disconnect from the electrical outlet first and then from the Tablet PC. A reverse procedure may damage the AC adapter or Tablet PC.
- When unplugging the connector, always hold the plug head. Never pull on the cord.

The AC adapter serves as a converter from AC (Alternating Current) to DC (Direct Current) power because your Tablet PC runs on DC power, but an electrical outlet usually provides AC power. It also charges the battery pack when connected to AC power.

The adapter operates on any voltage in the range of 100~240 V AC.

Battery Pack

Your Tablet PC has two battery packs. The battery pack is the internal power source for the Tablet PC. It is rechargeable using the AC adapter.

NOTE: Care and maintenance information for the battery is provided in the "Battery Pack Guidelines" section in Chapter 7.

Charging the Battery Pack

NOTE:

- Charging will not start if the battery's temperature is outside the allowed range, which is between 0 °C (32 °F) and 50 °C (122 °F). Once the battery's temperature meets the requirements, charging automatically resumes.
- During charging, do not disconnect the AC adapter before the battery has been fully charged; otherwise you will get a prematurely charged battery.
- The battery has a high temperature protection mechanism which limits the maximum charge of the battery to 80% of its total capacity in the event of high temperature conditions. In such conditions, the battery will be regarded as fully charged at 80% capacity.
- The battery level may automatically lessen due to the self-discharge process, even when the battery pack is fully charged. This happens no matter if the battery pack is installed in the Tablet PC.

To charge the battery pack, connect the AC adapter to the Tablet PC and an electrical outlet. The Battery Indicator ( ) on the Tablet PC glows amber to indicate that charging is in progress. You are advised to keep the Tablet PC power off while the battery is being charged. When the battery is fully charged, the Battery Charge Indicator glows green.

The two battery packs are charged in parallel. It takes approximately 5 hours to fully charge the two battery packs when the power is off and approximately 6 hours when the power is on (may need a longer charging time at lower temperatures).

CAUTION: After the Tablet PC has been fully recharged, do not immediately disconnect and reconnect the AC adapter to charge it again. Doing so may damage the battery.

Initializing the Battery Pack

You need to initialize a new battery pack before using it for the first time or when the actual operating time of a battery pack is much less than expected. Initializing is the process of fully charging, discharging, and then charging. It can take several hours.

A software tool called "Gauge Reset" is provided for the purpose. Use the G-Manager program and select the Battery tab to find the tool.

Checking the Battery Level

NOTE: Any battery level indication is an estimated result. The actual operating time can be different from the estimated time, depending on how you are using the Tablet PC.

The operating time of a fully charged battery pack depends on how you are using the Tablet PC. When your applications often access peripherals, you will experience a shorter operating time.

The two battery packs are discharged in parallel.

By Operating System

You can check the approximate battery level using the battery meter function of the operating system. To read the battery level in Windows, tap the battery icon on the taskbar.

By Gas Gauge

On the exterior side of the battery pack is a gas gauge for displaying the estimated battery charge.

When the battery pack is not installed in the Tablet PC and you want to know the battery charge, you can press the push-button to see the number of LEDs that light up. Each LED represents 20% charge.

Battery Low Signals and Actions

The battery icon changes appearance to display the current state of the battery.

Battery Icon		Battery Level	Description
Windows 10	Windows 7		
		Discharging	The icon shows the charge remaining in 10-percent increments until the charge reaches the low-battery level.
		Low	The battery charge has reached the low-battery level.
		Critically low	The battery charge has reached the critical battery level. By default, Windows will display a notification and put your Tablet PC into Hibernation.

When the battery is low, the Tablet PC's Battery Indicator ( ) also blinks red to alert you to take actions.

Always respond to low-battery by connecting the AC adapter, placing your Tablet PC in Hibernation mode, or turning off the Tablet PC.

Replacing the Battery Pack

CAUTION:

- There is danger of explosion if the battery is incorrectly replaced. Replace the battery only with the Tablet PC manufacturer's battery packs. Discard used batteries according to the dealer's instructions.
- Do not attempt to disassemble the battery pack.

NOTE: You can hot swap one battery pack while the other one is supplying the power.

To replace the battery pack, follow these steps:

1. Locate the battery pack you want to remove (1 or 2).
2. Slide the battery latch toward the right (❶) and then upwards (❷) to release the battery pack.

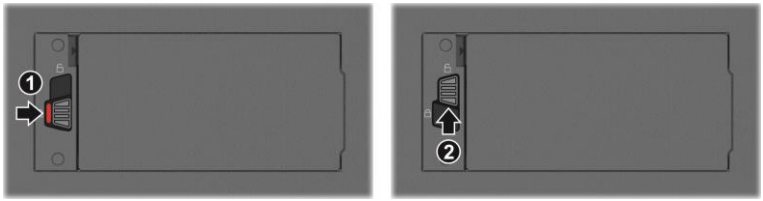

3. Remove the battery pack from its compartment.

4. Fit another battery pack into place. With the battery pack correctly oriented, attach its connector side to the battery compartment at an angle (❶) and then press down the other side (❷).

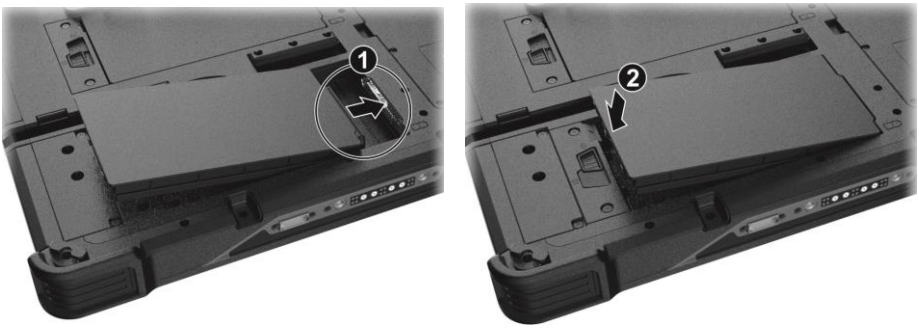

5. Slide the battery latch toward the locked position ( ).

CAUTION: Make sure the battery latch is correctly locked, not revealing the underneath red part.

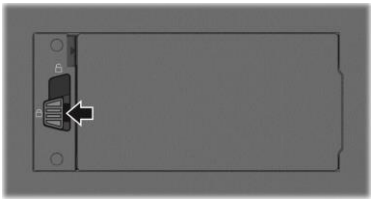

Correct

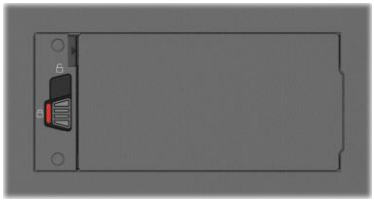

Incorrect (revealing red part)

Power-Saving Tips

Aside from enabling your Tablet PC's power saving mode, you can do your part to maximize the battery's operating time by following these suggestions.

- Do not disable Power Management.
- Decrease the LCD brightness to the lowest comfortable level.
- Shorten the length of time before Windows turn off the display.
- When not using a connected device, disconnect it.
- Turn off the wireless radio if you are not using the wireless module (such as WLAN, Bluetooth, or WWAN).
- Turn off the Tablet PC when you are not using it.

Chapter 4

Expanding Your Tablet PC

You can expand the capabilities of your Tablet PC by connecting other peripheral devices.

When using a device, be sure to read the instructions accompanying the device together with the relevant section in this chapter.

Connecting Peripheral Devices

Connecting a USB Device

Your Tablet PC has two USB 3.0 ports and one USB 2.0 port for connecting USB devices, such as a digital camera, scanner, printer, modem, and mouse.

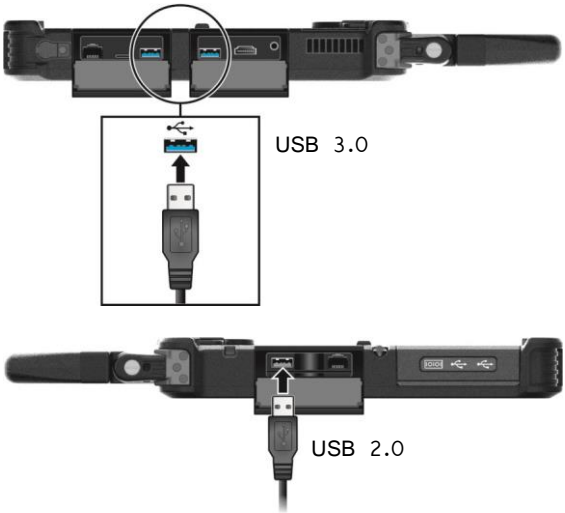

NOTE: USB 3.0 port is backward compatible with USB 2.0 port. However, if necessary, you can set a USB 3.0 port to be a USB 2.0 port in the BIOS Setup Utility. Go to the utility, select **Advanced → Device Configuration**, and then select **Upper Left Port Setting** or **Lower Left Port Setting**.

Connecting a USB Device with Fischer Connectors (Optional)

Select models have one or two USB connectors of DBPU 7 pin type, which is a Fischer push-pull locking system. You can connect a USB device supporting this type of connection. Typical applications are military and security services.

1. Align the dot on the cable with the dot on the Tablet PC.
2. Push the outer sleeve and then plug the connector.

Once connected, a special locking mechanism will prevent accidental disconnection. To disconnect, push the outer sleeve to unlock and then pull the connector out.

Connecting an Audio Device

The audio combo connector is the "4-pole TRRS 3.5mm" type (Apple iPhone Recessed) so you can connect a compatible headset microphone.

SAFETY WARNING:

To prevent possible hearing damage, do not listen at high volume levels for long periods.

Connecting a Monitor

If you want the benefits of a larger display screen with higher resolution, you can connect an external display monitor to your Tablet PC.

Your Tablet PC has an HDMI connector. HDMI (High-Definition Multimedia Interface) is an audio/video interface that transmits uncompressed digital data and therefore delivers true HD quality.

Select models have a VGA connector.

To switch the display output, use Windows Control Panel or OSD Control Panel.

Connecting a Serial Device (Optional)

If your model has the RS232 serial port, you can connect a serial device such as a serial mouse or serial communication device.

Using Storage and Expansion Cards

Using MicroSD Cards

Your computer has a storage card reader for reading from and writing to removable storage cards (or called memory cards). The reader supports microSD (Secure Digital) and microSDHC (Secure Digital High Capacity) cards.

To insert a storage card:

1. Locate the microSD card reader. Open the cover.
2. Align the card with its connector pointing to the slot and the connector side facing back. Slide the card into the slot until it reaches the end.

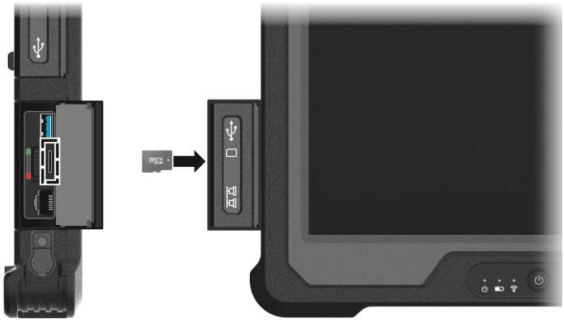

3. Close the cover.
4. Windows will detect the card and assign it a drive name.

To remove a storage card:

1. Open **File Explorer** and click **Computer**.
2. Right-click the drive with the card and select **Eject**.
3. Open the cover.
4. Slightly push the card to release and then pull it out of the slot.
5. Close the cover.

Using Smart Cards

With an embedded microcontroller, smart cards have the unique ability to store large amounts of data, carry out their own on-card functions (e.g., encryption and mutual authentication), and interact intelligently with a smart card reader.

To insert a smart card:

1. Locate the smart card reader. Open the cover.

2. With the embedded computer chip facing front and near the slot, slide the smart card into the slot.

3. Close the cover.

To remove a smart card:

1. Make sure that the software is not accessing the smart card.

2. Open the cover.

3. Slightly push the card to release and then pull it out of the slot.

4. Close the cover.

Changing or Replacing

Replacing the SSD

1. Disconnect the AC adapter and remove the battery packs.
2. Carefully place the Tablet PC upside down.
3. Remove 9 screws to open the compartment cover.

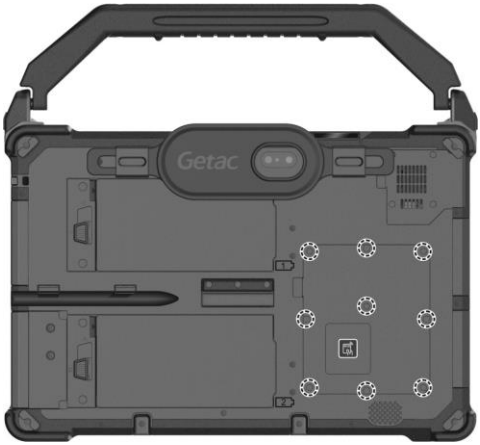

4. Unfasten 3 screws and remove the metal plate.

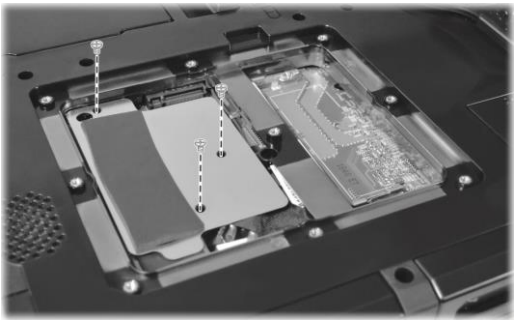

5. Unfasten the standoff.

6. Detach the SSD from the system board.

7. Plug the new SSD into place and tighten the standoff.
8. Replace the metal plate and secure with 3 screws.
9. Close the compartment cover and secure with 9 screws.
10. Replace the battery packs.

System Memory Upgrade

You can upgrade your Tablet PC by expanding system memory.

CAUTION:

- It is not recommended that you buy and install RAM modules by yourself. If you want to expand system memory, please ask Getac service center to install DRAM modules for you so that full compatibility can be guaranteed.
- RAM modules are extremely sensitive to static electricity. There are cases where static electricity generated by the human body has adversely affected such modules. When inserting or removing a RAM module, do not touch the terminals or internal components, insert objects other than the module, or allow foreign particles to enter. Doing so has been known to cause damage, fire, or electrical shock.

To install the RAM module:

1. Disconnect the AC adapter and remove the battery packs.
2. Carefully place the Tablet PC upside down.
3. Remove 9 screws to open the compartment cover.

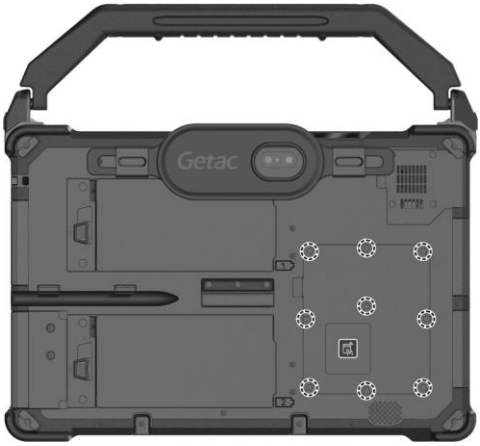

4. To install the RAM module, match the module's notched part with the socket's projected part and firmly insert the module into the socket at a 20-degree angle (❶). Then push down until the retaining clips lock the module into position (❷).

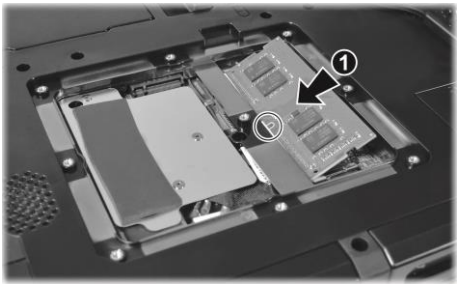

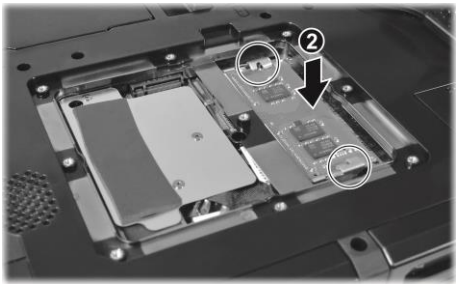

CAUTION: If the RAM module is difficult to insert or difficult to push down, do not force it. Check once more to ensure that the module is positioned correctly.

5. Close the compartment cover and secure with 9 screws.

6. Replace the battery packs.

Chapter 5

Using BIOS Setup

BIOS Setup Utility is a program for configuring the BIOS (Basic Input/ Output System) settings of the computer. BIOS is a layer of software, called firmware, that translates instructions from other layers of software into instructions that the computer hardware can understand. The BIOS settings are needed by your computer to identify the types of installed devices and establish special features.

This chapter tells you how to use the BIOS Setup Utility.

When and How to Use

NOTE:

- The actual setting items on your model may differ from those described in this chapter.
- The availability of some setting items depends on the Windows version your computer is running.

You need to run BIOS Setup Utility when:

- You see an error message on the screen requesting you to run BIOS Setup Utility.
- You want to restore the factory default BIOS settings.
- You want to modify some specific settings according to the hardware.
- You want to modify some specific settings to optimize the system performance.

To run BIOS Setup Utility:

Method 1: During system startup when the logo screen appears, tap the screen or press the Windows Logo button on your Tablet PC. In the pre-boot menu that appears, select Setup Utility. (Tap with your finger. Stylus is not supported here.)

NOTE:

- If you don't want any accidental tapping to invoke the pre-boot menu, you can disable this method by setting the "Screen Tapping for Boot Options" item in the BIOS Setup Utility.
- When tapping the screen for operating BIOS Setup, use your finger. The touching of a stylus tip is not supported in this situation.
- For Windows 10 models, the time period in which you can use the above method is extremely short. You can use the other method as described below.

Method 2 (for Windows 10 models only): Tap → Settings → Update & security → Recovery. Under Advanced startup, tap Restart now. In the boot options menu, tap Troubleshoot → Advanced options → UEFI Firmware Settings. Tap Restart. In the pre-boot menu that appears, select Setup Utility.

Method 2 (for Windows 7 models only): If a keyboard is connected, press the **F2** key when the prompt ("Press F2 for System Utilities") appears at the bottom left corner of the screen during system startup.

Menu Descriptions

Information Menu

The Information menu contains the basic configuration information of the system. There are no user-definable items in this menu.

NOTE: The "Asset Tag" information appears when you have entered the asset number for this Tablet PC using the asset management program. The program is provided in the Asset tag folder of the Driver disc.

Main Menu

The Main menu contains the various system settings.

- **System Date** sets the system date.
- **System Time** sets the system time.
- **OS Select** specifies which version of Windows your computer is running.
- **Boot Priority** determines the first device that the system boots from. Select Legacy First or UEFI First according to your needs.
- **Legacy USB Support** enables or disables the system's support for Legacy USB.
- CSM Support enables or disables CSM (Compatibility Support Mode). You can set this item to Yes for backward compatibility with legacy BIOS services.
- PXE Boot sets the PXE boot to *UEFI* or *Legacy*. PXE (Preboot eXecution Environment) is an environment to boot computers using a network interface independently of data storage devices or installed operating systems.

Advanced Menu

The Advanced menu contains the advanced settings.

- **Wake Up Capability**
  USB Wake-Up From S3 allow a USB device activity to wake up the system from S3 (Sleep) state.

- System Policy allows you to choose between *Performance* and *Balance*. If battery life is your first priority, select *Balance*. If you need system performance more than battery life, select *Performance*.

- **AC Initiation** sets if connecting AC power will automatically start or resume the system.

- Screen Tapping for Boot Options sets if tapping the screen during startup will invoke the boot options menu which provides access to some pre-boot operations. If disabled, tapping the screen during startup has no effect to the system's booting process.

- **Active Management Technology Suppor**t (This item appears only on models supporting vPro.)
  Intel AMT Support enables or disables Intel® Active Management Technology BIOS extension execution. AMT allows the system administrator to access an AMT featured computer remotely.
  Intel AMT Setup Prompt determines whether the prompt for entering Intel MEBx Setup appears or not during POST.

- **Virtualization Technology Setup**
  Intel(R) Virtualization Technology enables or disables Intel® VT (Intel Virtualization Technology) feature which provides hardware support for processor virtualization. When enabled, a VMM (Virtual Machine Monitor) can utilize the additional hardware virtualization capabilities provided by this technology.
  Intel(R) VT for Directed I/O (VT-d) enables or disables VT-d (Intel® Virtualization Technology for Directed I/O). When enabled, VT-d helps enhance Intel platforms for efficient virtualization of I/O devices.
  SW Guard Extensions (SGX) can be set to *Disabled*, *Enabled*, or *Software Controlled*. Intel® Software Guard Extensions (Intel® SGX) is an Intel technology for increasing the security of application code. It is used by application developers.

- **Graphics Setup**
  DVMT Pre-Allocated sets the amount of pre-allocated (fixed) graphics memory for use by the internal graphics device.

- Device Configuration enables or disables several hardware components. The items available for setting depend on your model.

- Recovery Partition allows you to restore your Windows 10 system to the factory default state by using the "recovery partition" feature. Recovery partition is a portion of your hard disk drive that is set aside by the manufacturer to hold the original image of your system.

WARNING:

- Using this feature will reinstall Windows to your system and configure it to the system's factory default settings. All data on the hard disk drive will be lost.
- Make sure that power is not interrupted during the recovery process. An unsuccessful recovery may result in Windows startup problems.

- Windows RE launches Windows Recovery Environment. Windows RE (Windows Recovery Environment) is a recovery environment that provides recovery, repair, and troubleshooting tools in Windows 10.

Security Menu

The Security menu contains the security settings, which safeguard your system against unauthorized use.

NOTE:

- You can set the user password only when the supervisor password has been set.
- If both the supervisor and user passwords are set, you can enter any of them for starting up the system and/or entering BIOS Setup. However, the user password only allows you to view the settings of certain items.
- A password setting is applied right after it is confirmed. To cancel a password, leave the password empty by pressing the **Enter** key.

- **Set Supervisor/User Password** sets the supervisor/user password. You can set the supervisor/user password to be required for starting up the system and/or entering BIOS Setup.

- **Password on Boot** allows you to enable or disable the entering of password for booting up your system.

- **Secure Boot Configuration** (This item appears only when the password has been set.)
  Secure Boot enables or disables Secure Boot. Secure Boot is a feature that helps prevent unauthorized firmware, operating systems, or UEFI drivers from running at boot time.
  Delete all Security Boot keys deletes all secure boot variables.
  Restore Factory Defaults resets secure boot variables to manufacturing defaults.

- **Set HDD 0 User Password** sets the password for locking the Primary Master hard disk drive. After setting a password, the hard disk drive can only be unlocked by the password no matter where it is installed.

- **TPM Setup Menu**
  TPM Support enables or disables TPM (Trusted Platform Module) support. TPM (Trusted Platform Module) is a component on your computer's mainboard that is specifically designed to enhance platform security by providing a protected space for key operations and other security critical tasks.
  Change TPM Status allows you to select between *No Change* and *Clear*.

Boot Menu

The Boot menu sets the sequence of the devices to be searched for the operating system.

- Boot Type Order determines the boot order. You can rearrange the order by dragging the boot device name up or down in the list.

- Each boot device can be individually set to *On* or *Off*. If you want to exclude a boot device from the boot order, set the device to *Off*.

Exit Menu

The Exit menu displays ways of exiting BIOS Setup Utility. After finishing with your settings, you must save and exit so that the changes can take effect.

- **Exit Saving Changes** saves the changes you have made and exits BIOS Setup Utility.

- **Exit Discarding Changes** exits BIOS Setup Utility without saving the changes you have made.

- **Load Setup Defaults** loads the factory default values for all the items.

- **Discard Changes** restores the previous values for all the items.
- **Saves Changes** saves the changes you have made.

Chapter 6

Using Getac Software

Getac software includes application programs for specific computer components and utility programs for overall management.

This chapter briefly introduces the programs.

OSD Control Panel

The OSD (On Screen Display) Control Panel provides a user-friendly interface for you to quickly activate or operate certain functions on your Tablet PC with a simple tap of the screen.

To open the OSD Control Panel, start the program named **OSDC.** The following screen appears.

For detailed information on the program, see the program's online help.

G-Manager

G-Manager allows you to view, manage, and configure several system functions and features. The G-Manager home menu presents four categories. Select a category name to open it.

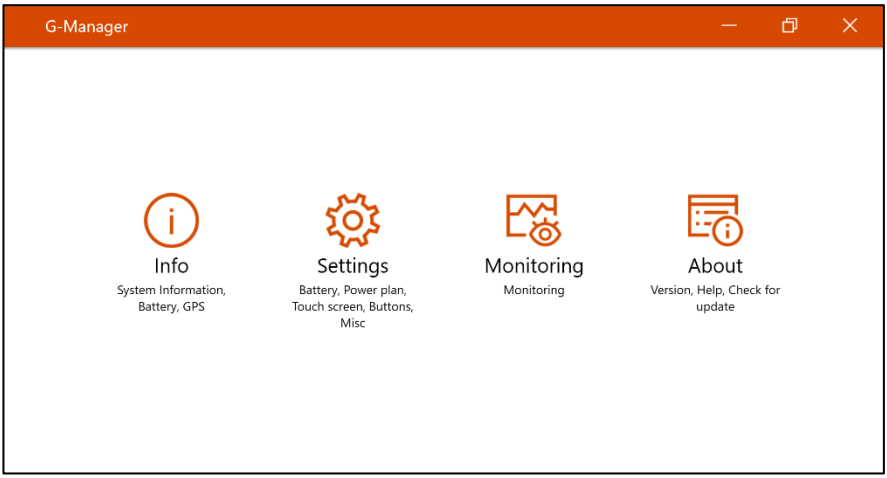

For detailed information, see the program's online help. Select About → About → Help.

Camera (Optional)

G-Camera (for Windows 10)

G-Camera is a geo-tagging camera application. Geographical information can be embedded into JPEG files as EXIF 2.2 metadata.

NOTE: G-Camera uses the standard location service of Windows.

To start the G-Camera application, select → All apps → G-Camera.

In the middle is the preview window with status display. At the two sides are various buttons.

For detailed information on the program, see the program's online help. Tap → Help.

Getac Camera (for Windows 7)

Getac Camera is a geo-tagging camera program, which allows you to stamp geographical information on photos as watermarks and embed such information into JPEG files as EXIF 2.2 metadata.

NOTE: Before starting Getac Camera, close any other program that uses the camera; otherwise, Getac Camera can only provide limited functions.

Start Getac Camera. The Getac Camera window appears as shown below.

The GPS positioning will be automatically activated. When the GPS positioning is completed, you will see the geographical information in the watermark area on the image.

For detailed information on the program, see the program's online help. Select 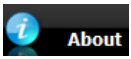

and then .

Chapter 7

Care and Maintenance

Taking good care of your Tablet PC will ensure a trouble-free operation and reduce the risk of damage to your Tablet PC.

This chapter gives you guidelines covering areas such as protecting, storing, cleaning, and traveling.

Protecting the Tablet PC

To safeguard the integrity of your Tablet PC data as well as the Tablet PC itself, you can protect the Tablet PC in several ways as described in this section.

Using an Anti-Virus Strategy

You can install a virus-detecting program to monitor potential viruses that could damage your files.

Using the Cable Lock

You can use a Kensington-type cable lock to protect your Tablet PC against theft. The cable lock is available in computer stores.

To use the lock, loop the lock cable around a stationary object such as a table. Insert the lock to the Kensington lock hole and turn the key to secure the lock. Store the key in a safe place.

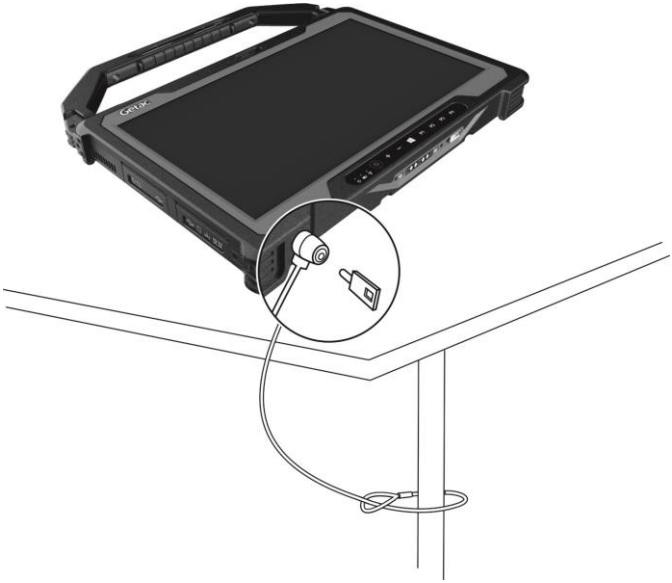

Taking Care of the Tablet PC

Location Guidelines

- For optimal performance, use the Tablet PC where the recommended temperature is between 0 °C (32 °F) and 55 °C (131 °F). (Actual operating temperature depends on product specifications.)
- Avoid placing the Tablet PC in a location subject to high humidity, extreme temperatures, mechanical vibration, direct sunlight, or heavy dust. Using in extreme environments for long periods can result in product deterioration and a shortened product life.
- Operating in an environment with metallic dust is not allowed.
- Place the Tablet PC on a flat and steady surface. Do not stand the Tablet PC on its side or store it in an upside-down position. A strong impact by dropping or hitting may damage the Tablet PC.
- Do not cover or block any ventilation openings on the Tablet PC. For example, do not place the Tablet PC on a bed, sofa, rug, or other similar surface. Otherwise, overheating may occur that results in damage to the Tablet PC.
- As the Tablet PC can become very hot during operation, keep it away from objects that are vulnerable to heat.
- Keep the Tablet PC at least 13 cm (5 inches) away from electrical appliances that can generate a strong magnetic field such as a TV, refrigerator, motor, or a large audio speaker.
- Avoid moving the Tablet PC abruptly from a cold to a warm place.
  A temperature difference of more than 10 °C (18 °F) may cause condensation inside the unit, which may damage the storage media.

General Guidelines

- Do not place heavy objects on top of the Tablet PC as this may damage the display.
- To avoid damaging the screen, do not touch it with any sharp object.
- LCD image sticking occurs when a fixed pattern is displayed on the screen for a prolonged period of time. You can avoid the problem by limiting the amount of

static content on the display. It is recommended that you use a screen saver or turn off the display when it is not in use.

- To maximize the life of the backlight in the display, allow the backlight to automatically turn off as a result of power management.

Cleaning Guidelines

- Never clean the Tablet PC with its power on.
- Use a soft cloth moistened with water or a non-alkaline detergent to wipe the exterior of the Tablet PC.
- Gently wipe the display with a soft, lint-free cloth.
- If water or liquid is split onto the Tablet PC, wipe it dry and clean when possible. Though your Tablet PC is water-proof, do not leave the Tablet PC wet when you can dry it.
- If the Tablet PC gets wet where the temperature is 0° C (32° F) or below, freeze damage may occur. Make sure to dry the wet Tablet PC.

Battery Pack Guidelines

- Recharge the battery pack when it is nearly discharged. When recharging, make sure that the battery pack is fully charged. Doing so may avoid harm to the battery pack.
- The battery pack is a consumable product and the following conditions will shorten its life:
  – when frequently charging the battery pack
  – when using, charging, or storing the battery in high temperature condition
- To avoid hastening the deterioration of the battery pack thereby prolonging its useful life, minimize the number of times you charge it so as not to frequently increase its internal temperature.
- Charge the battery pack between 10 °C ~ 30 °C (50 °F ~ 86 °F) temperature range. A higher environment temperature will cause the battery pack's temperature to rise. Avoid charging the battery pack inside a closed vehicle and in hot weather condition. Also, charging will not start if the battery pack is not within the allowed temperature range.

- It is recommended that you do not charge the battery pack more than once a day.
- It is recommended that you charge the battery pack with the Tablet PC's power off.
- To maintain the battery pack's operating efficiency, store it in a cool dark place removed from the Tablet PC and with 30 % ~ 40 % charge remaining.
- Important guidelines when using the battery pack.
  When installing or removing the battery pack take note of the following:
  – avoid installing or removing the battery pack when the Tablet PC is in Sleep mode. Abruptly removing the battery pack may cause loss of data or the Tablet PC may become unstable.
  – avoid touching the battery pack terminals or damage may occur, thereby causing improper operation to it or the Tablet PC.
  The Tablet PC's input voltage and surrounding temperature will directly affect the battery pack's charge and discharge time:
  – charging time will be prolonged when the Tablet PC is turned on. To shorten the charging time, it is recommended that you place the Tablet PC in Sleep or Hibernation mode.
  – a low temperature will prolong the charging time as well as hasten the discharge time.
- When using battery power in an extremely low temperature environment, you may experience shortened operating time and incorrect battery level reading. This phenomenon comes from the chemical characteristics of batteries. The appropriate operating temperature for the battery is -10 °C ~ 50 °C (14 °F ~ 122 °F).
- Do not leave the battery pack in storage for more than six months without recharging it.

Touchscreen Guidelines

- Use the finger or the included stylus on the display. Using a sharp or metallic object other than your finger or stylus may cause scratches and damage the display, thereby causing errors.
- Use a soft cloth to remove dirt on the display. The touchscreen surface has a special protective coating that prevents dirt from sticking to it. Not using a soft cloth may cause damage to the special protective coating on the touchscreen surface.

- Turn off the Tablet PC power when cleaning the display. Cleaning the display with the power on may cause improper operation.
- Do not use excessive force on the display. Avoid placing objects on top of the display as this may cause the glass to break thereby damaging the display.
- In low and high temperatures (below 5 °C / 41 °F and above 60 °C / 140 °F), the touchscreen may have a slower response time or register the touch in the wrong location. It will go back to normal after returning to room temperature.
- When there is noticeable discrepancy in the operation of the touchscreen function (wrong location on intended operation or improper display resolution), refer to the Windows online Help for instructions on recalibrating the touchscreen display.

When Traveling

- Before traveling with your Tablet PC, make a backup of your hard disk data into flash disks or other storage devices. As an added precaution, bring along an extra copy of your important data.
- Make sure that the battery pack is fully charged.
- Make sure that the Tablet PC is turned off.
- Make sure that all the connector covers are closed completely to ensure the waterproof integrity.
- Disconnect the AC adapter from the Tablet PC and take it with you. Use the AC adapter as the power source and as a battery-charger.
- Hand-carry the Tablet PC. Do not check it in as luggage.
- If you need to leave the Tablet PC in the car, put it in the trunk of the car to avoid exposing the Tablet PC to excessive heat.
- When going through airport security, it is recommended that you send the Tablet PC and flash disks through the X-ray machine (the device you set your bags on). Avoid the magnetic detector (the device you walk through) or the magnetic wand (the handheld device used by security personnel).
- If you plan to travel abroad with your Tablet PC, consult your dealer for the appropriate AC power cord for use in your country of destination.

Chapter 8

Troubleshooting

Computer problems can be caused by hardware, software, or both. When you encounter any problem, it might be a typical problem that can easily be solved.

This chapter tells you what actions to take when solving common computer problems.

Preliminary Checklist

Here are helpful hints to follow before you take further actions when you encounter any problem:

- Try to isolate which part of the Tablet PC is causing the problem.
- Make sure that you turn on all peripheral devices before turning on the Tablet PC.
- If an external device has a problem, make sure that the cable connections are correct and secure.
- Make sure that the configuration information is properly set in the BIOS Setup program.
- Make sure that all the device drivers are correctly installed.
- Make notes of your observations. Are there any messages on the screen? Do any indicators light? Do you hear any beeps? Detailed descriptions are useful to the service personnel when you need to consult one for assistance.

If any problem persists after you follow the instructions in this chapter, contact an authorized dealer for help.

Solving Common Problems

Battery Problems

The battery does not charge (Battery Charge indicator does not light amber).

- Make sure that the AC adapter is properly connected.
- Make sure that the battery is not too hot or cold. Allow time for the battery pack to return to room temperature.
- If the battery doesn't charge after it has been stored in very low temperatures, try disconnecting and reconnecting the AC adapter to solve the problem.
- Make sure that the battery pack is installed correctly.
- Make sure that the battery terminals are clean.

The operating time of a fully charged battery becomes shorter.

- If you often partially recharge and discharge, the battery might not be charged to its full potential. Initialize the battery to solve the problem.

The battery operating time indicated by the battery meter does not match the actual operating time.

- The actual operating time can be different from the estimated time, depending on how you are using the Tablet PC. If the actual operating time is much less than the estimated time, initialize the battery.

Bluetooth **Wireless Transmission Problems**

I cannot connect to another device with Bluetooth wireless technology.

- Make sure that both devices have activated Bluetooth feature.
- Make sure that the distance between the two devices is within the limit and that there are no walls or other obstructions between the devices.
- Make sure that the other device is not in “Hidden” mode.
- Make sure that both devices are compatible.

Display Problems

Nothing appears on the screen.

- During operation, the screen may automatically turn off as a result of power management. Press any key to see if the screen comes back.
- The brightness level might be too low. Increase the brightness.

The characters on the screen are dim.

- Adjust the brightness and/or contrast.

The display brightness cannot be increased.

- As a protection, the display brightness will be fixed at a low level when the surrounding temperature is too high or too low. It is not a malfunction in this situation.

Bad dots appear on the display at all times.

- A small number of missing, discolored, or bright dots on the screen are an intrinsic characteristic of TFT LCD technology. It is not regarded as a LCD defect.

Clouding (or called “mura”) happens on the screen when you exert forces on the left or right side of the LCD frame.

- This is a normal phenomenon, not a defect.

Hardware Device Problems

The Tablet PC does not recognize a newly installed device.

- The device may not be correctly configured in the BIOS Setup program. Run the BIOS Setup program to identify the new type.
- Make sure if any device driver needs to be installed. (Refer to the documentation that came with the device.)
- Make sure if the device needs any jumper or switch settings. (Refer to the documentation that came with the device.)
- Check the cables or power cords for correct connections.

- For an external device that has its own power switch, make sure that the power is turned on.

Power Management Problems

The Tablet PC does not enter Sleep or Hibernation mode automatically.

- If you have a connection to another computer, the Tablet PC does not enter Sleep or Hibernation mode if the connection is actively in use.
- Make sure that the Sleep or Hibernation time-out is enabled.

The Tablet PC does not enter Sleep or Hibernation mode immediately.

- If the Tablet PC is performing an operation, it normally waits for the operation to finish.

The Tablet PC does not resume from Sleep or Hibernation mode.

- The Tablet PC automatically enters Sleep or Hibernation mode when the battery pack is empty. Do any one of the following:
  - Connect the AC adapter to the Tablet PC.
  - Replace the empty battery pack with a fully charged one.

Sensor Problems (for Windows 10 Models Only)

The built-in digital compass doesn't seem to be accurate.

- Rotating the display can affect the accuracy of the digital compass. This is normal, not a malfunction. The sensors for the compass require periodic recalibration. Follow this method to recalibrate the sensors:

  1. Make sure you are far away from any large metal objects or magnetic fields.
  2. Start an application that utilizes the digital compass.
  3. Hold the Tablet PC level with the horizon, with the LCD side facing up.
  4. Rotate the Tablet PC 360° at least three times around each axis (X, Y, and Z) as shown below.

Software Problems

An application program does not work correctly.

- Make sure that the software is correctly installed.
- If an error message appears on the screen, consult the software program's documentation for further information.
- If you are sure the operation has stop, reset the Tablet PC.

Sound Problems

No sound is produced.

- Make sure that the volume control is not set too low. Increase the volume.

- Make sure that the sound is not muted.
- Make sure that the Tablet PC is not in Sleep mode.
- If using an external speaker, make sure that the speaker is properly connected.

Distorted sound is produced.

- Make sure that the volume control is not set too high or too low. In most cases, a high setting can cause the audio electronics to distort the sound.

Startup Problems

When you turn on the Tablet PC, it does not respond and the Power Indicator does not light green.

- If you are using an external AC power, make sure that the AC adapter is correctly and securely connected. If so, make sure that the electrical outlet works properly.
- If you are using the battery power, make sure that the battery is not discharged.
- When the ambient temperature is below -20 °C (-4 °F), the Tablet PC will start up only if both battery packs are installed.

When you turn on the Tablet PC, it stops after POST.

- Reset your Tablet PC.

WLAN Problems

I cannot use the WLAN feature.

- Make sure that the WLAN feature is turned on.

Transmission quality is poor.

- Your Tablet PC may be in an out-of-range situation. Move your Tablet PC closer to the Access Point or another WLAN device it is associated with.
- Check if there is high interference around the environment and solve the problem as described next.

Radio interference exists.

- Move your Tablet PC away from the device causing the radio interference such as microwave oven and large metal objects.
- Plug your Tablet PC into an outlet on a different branch circuit from that used by the affecting device.
- Consult your dealer or an experienced radio technician for help.

I cannot connect to another WLAN device.

- Make sure that the WLAN feature is turned on.
- Make sure that the SSID setting is the same for every WLAN device in the network.
- Your Tablet PC is not recognizing changes. Restart the Tablet PC.
- Make sure that the IP address or subnet mask setting is correct.

I cannot communicate with the computer in the network when Infrastructure mode is configured.

- Make sure that the Access Point your Tablet PC is associated with is powered on and all the LEDs are working properly.
- If the operating radio channel is in poor quality, change the Access Point and all the wireless station(s) within the BSSID to another radio channel.
- Your Tablet PC may be in an out-of-range situation. Move your Tablet PC closer to the Access Point it is associated with.
- Make sure that your Tablet PC is configured with the same security option (encryption) to the Access Point.
- Use the Web Manager/Telnet of the Access Point to check whether it is connected to the network.
- Reconfigure and reset the Access Point.

I cannot access the network.

- Make sure that the network configuration is appropriate.
- Make sure that the user name or password is correct.
- You have moved out of range of the network.

- Turn off power management.

Other Problems

The date/time is incorrect.

- Correct the date and time via the operating system or BIOS Setup program.
- After you have performed everything as described above and still have the incorrect date and time every time you turn on the Tablet PC, the RTC (Real-Time Clock) battery is at the end of its life. Call an authorized dealer to replace the RTC battery.

Resetting the Tablet PC

You may have to reset (reboot) your Tablet PC on some occasions when an error occurs and the program you are using hangs up.

If you are sure the operation has stopped and you cannot use the “restart” function of the operating system, reset the Tablet PC.

Reset the Tablet PC by any one of these methods:

- Press and hold the **P2** button for more than 2 seconds. This opens the **Ctrl-Alt-Del** screen where you can select actions including **Restart**.
- If the above action does not work, press and hold the power button for more than 5 seconds to force the system to turn off. Then turn on the power again.

System Recovery

Windows 10 Models

Using Windows RE

Windows 10 has a recovery environment (Windows RE) that provides recovery, repair, and troubleshooting tools. The tools are referred to as Advanced Startup Options. You can access these options by selecting → Settings → Update & security. There are several choices:

- System Restore
  This option allows you to restore Windows to an earlier point in time if you have created a restore point.
- Recover from a drive
  If you have created a recovery drive on Windows 10, you can use the recovery drive to reinstall Windows.
- Reset this PC
  This option allows you to reinstall Windows with or without keeping your files.

See Microsoft website for more information.

NOTE:

- If you are in a situation where your computer won't boot into Windows, you can access the Advanced Startup Options by running the BIOS Setup Utility and selecting **Advanced → Windows RE**.
- System recovery for Windows 10 typically will take several hours to complete.

Using Recovery Partition

When necessary, you can restore your Windows 10 system to the factory default state by using the "recovery partition" feature. Recovery partition is a portion of your hard disk drive that is set aside by the manufacturer to hold the original image of your system.

WARNING:

- Using this feature will reinstall Windows to your system and configure it to the system's factory default settings. All data on the hard disk drive will be lost.
- Make sure that power is not interrupted during the recovery process. An unsuccessful recovery may result in Windows startup problems.

To restore your system to the factory default state:

1. Connect the AC adapter.
2. Run BIOS Setup Utility. Select Advanced → Recovery Partition. (See Chapter 5 for more information.)
3. Follow the onscreen instructions to complete the process.

Windows 7 Models

Use System Recovery when:

- The Windows 7 operating system does not start at all.
- You want to restore the system to the factory state.

WARNING:

- Using this feature will reinstall Windows to your system and configure it to the system's factory default settings. All data on the hard disk drive will be lost.
- Make sure that power is not interrupted during the recovery process. An unsuccessful recovery may result in Windows startup problems.

To run System Recovery:

1. Connect the AC adapter.
2. Turn on the Tablet PC. During system startup when the Getac logo screen appears, double-tap the screen. In the menu that appears, select HDI Recovery.

   Or, if a keyboard is connected, you can press **Ctrl** + **Alt** + **F2** keys for four seconds instead of tapping the screen.
3. In the screen that appears, select **Recovery** to start the recovery process.

4. The progress bar shows the percentage completed. When it reaches 100%, the system turns off.

5. Turn on the Tablet PC. The Windows setup wizard starts. Follow the onscreen prompts to continue.

6. When the system restarts, the installer screen appears. The installer will perform system hardware detection and driver installation.

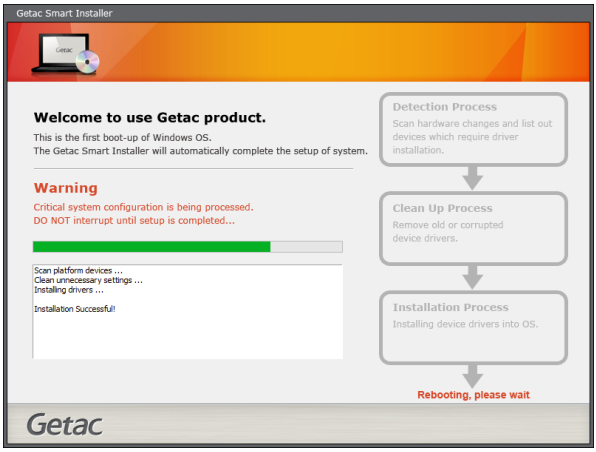

7. When completed, the system restarts and displays Windows desktop.

Using the Driver Disc (Optional)

NOTE: You can download the latest drivers and utilities from Getac website at http://www.getac.com → Support.

The Driver disc contains drivers and utilities required for specific hardware in your Tablet PC.

Since your Tablet PC comes with drivers and utilities pre-installed, you normally do not need to use the Driver disc. In case you want to manually install Windows, you will have to install the drivers and utilities one by one after installing Windows.

To manually install drivers and utilities:

1. Start up the Tablet PC.

2. Prepare an external CD/DVD drive (with USB connection). Connect the drive to your Tablet PC. Wait for the Tablet PC to recognize the drive.

3. Insert the Driver disc. Make sure you use the disc that matches the Windows version of your Tablet PC.

4. The autorun program should automatically start. You will see the installation menu. Tap NEXT to go to the next page if there is more than one.

5. To install a driver or utility, just tap the particular button and follow the onscreen instructions to complete the installation.

Appendix A

Specifications

NOTE: Specifications are subject to change without any prior notice.

Parts		Specifications
Model Name		A140, A140G2
CPU		- Intel® Core™ i7-8665U Quad Core, 1.9GHz up to 4.8GHz, 8MB Intel® Smart Cache - Intel® Core™ i7-8565U Quad Core, 1.8GHz up to 4.6GHz, 8MB Intel® Smart Cache - Intel® Core™ i5-8365U Quad Core, 1.6GHz up to 4.1GHz, 6MB Intel® Smart Cache - Intel® Core™ i5-8265U Quad Core, 1.6GHz up to 3.9GHz, 6MB Intel® Smart Cache
BIOS		Insyde, 16MB flash EEPROM, supporting UEFI, TPM, vPro, Computrace, HDD Security Eraser, and self-diagnostic
RAM		4/8/16/32GB DDR4 SO-DIMM
Video	Controller	UMA - Intel® HD Graphics 520
	Display panel	14-inch (16:9) wide TFT LCD, resolution up to 1366×768 HD or 1920x1080 FHD (option),dimmer mode, blackout mode
Touchscreen		Capacitive multi-touch screen - 10 point
Audio	Features	Azalia, High Definition audio
	Speaker	Integrated
	Microphone	Integrated
Hard disk drive		128/256/512GB SSD (Solid-State Drive)
Card slots		SD/SDHC microSD Smart Card
I/O ports	Standard	USB3.1 Gen 2 x 1, USB 3.0 x 1, USB 2.0, RJ45 x 1, combo audio (4-pole TRRS 3.5mm type), HDMI, Docking
	Optional	RS232, Rugged USB x 1 or x 2, tri antenna pass-through

Parts		Specifications
LAN		Gigabit Network Connection, 10/100/1000 Mbps Ethernet, LAN1 and LAN2
Wireless LAN + Bluetooth		Intel 8260NGW 2x2 802.11 AC + Bluetooth combo Bluetooth 4.2 class 2 + EDR
Camera (option)		Front: FHD Rear: 8M pixel, autofocus, LED
GPS (option)		Internal UART
WWAN (option)		3G/4G LTE
Barcode scanner (option)		1D and 2D, with Trigger button
NFC/RFID reader (option)		Contactless Combo NFC & RFID, supporting HF Protocol: ISO 14443 –(A,B), MIFARE, ISO 18000-3
Security		Kensington lock TPM 2.0 Fingerprint scanner (optional)
Power	AC adapter	Universal 65 W; input: 100~240 V, 50/60 Hz; output: 19V
	Battery pack x 2	Lithium-ion Prismatic type, 3-cell
Dimension (LxW×D)		359 x 238 x 32.5mm (14.13 × 9.37 × 1.28 inch) (without the handle)
Weight		2 kg (4.4 lb) (without the handle)

Button Functions on Special Occasions

On “POST/BIOS Setup/Non-ACPI” occasions, the five hardware buttons provide keyboard key functions as described below.

Button	Function
+	↑ Up
–	↓ Down
⊞	Enter
P1	Esc
P2	Tab

Appendix B

Regulatory Information

This appendix provides regulatory statements and safety notices on your Tablet PC.

NOTE: Marking labels located on the exterior of your Tablet PC indicate the regulations that your model complies with. Please check the marking labels and refer to the corresponding statements in this appendix. Some notices apply to specific models only.

On the Use of the System

Class B Regulations

USA

Federal Communications Commission Radio Frequency Interference Statement

NOTE:

This equipment has been tested and found to comply with the limits for a Class B digital device pursuant to Part 15 of the FCC Rules. These limits are designed to provide reasonable protection against harmful interference in a residential installation. This equipment generates, uses, and can radiate radio frequency energy and, if not installed and used in accordance with the instructions, may cause harmful interference to radio communications. However, there is no guarantee that interference will not occur in a particular installation. If this equipment does cause harmful interference to radio or television reception, which can be determined by turning the equipment off and on, the user is encouraged to try to correct the interference by one or more of the following measures:

- Reorient or relocate the receiving antenna.
- Increase the separation between the equipment and receiver.
- Connect the equipment into an outlet on a circuit different from that to which the receiver is connected.
- Consult the dealer or an experienced radio/TV technician for help.

Any changes or modifications not expressly approved by the manufacturer could void the user's authority to operate the equipment.

Please note:

The use of a non-shielded interface cable with this equipment is prohibited.

Company name: Getac USA
Address: 15495 Sand Canyon Rd., Suite 350 Irvine, CA 92618 USA
Phone: 949-681-2900

Canada

Canadian Department of Communications
Radio Interference Regulations Class B Compliance Notice

This Class B digital apparatus meets all requirements of the Canada Interference-Causing equipment regulations.

Cet appareil numérique de Classe B respecte toutes les exigences du Règlement Canadien sur le matériel brouileur.

This digital apparatus does not exceed the Class B limits for radio noise emissions from digital apparatus set out in the Radio Interference Regulations of the Canadian Department of Communications.

Le présent appareil numérique n'émet pas de bruits radioélectriques dépassant les limites applicables aux appareils numériques de la classe B prescrites dans le Règlement sur le brouillage radioélectrique édicté par le ministère des Communications du Canada.

ANSI Warning

Equipment approved for ANSI/ISA 12.12.01, Nonincendive Electrical Equipment for use in Class 1, Division 2, Group A, B, C, and D.
Maximum ambient temperature: 40°C

- WARNING: To prevent ignition of a hazardous atmosphere, batteries must only be changed or charged in an area known to be non-hazardous.
- EXPLOSION HARZARD WARNING: External connections/hubs through the connectors as mentioned (USB connector, Ethernet connector, video port, serial port, power supply connector, microphone jack, headphones jack, and buttons/switches) are not to be used in a hazardous location.
- Power adapter shall not be used in hazardous locations.

Safety Notices

About the Battery

If the battery is mishandled, it may cause fire, smoke or an explosion and the battery's functionality will be seriously damaged. The safety instructions listed below must be followed.

Danger

- Do not immerse the battery with liquid such as water, sea water or soda.
- Do not charge/discharge or place the battery in high-temperature (more than 80 °C / 176 °F) locations, such as near a fire, heater, in a car in direct sunlight, etc.
- Do not use unauthorized chargers.
- Do not force a reverse-charge or a reverse-connection.
- Do not connect the battery with AC plug (outlet) or car plugs.
- Do not adapt the battery to unspecified applications.
- Do not short circuit the battery.
- Do not drop or subject the battery to impacts.
- Do not penetrate with a nail or strike with a hammer.
- Do not directly solder the battery.
- Do not disassemble the battery.

Warning

- Keep the battery away from infants.
- Stop using the battery if there are noticeable abnormalities such as abnormal smell, heat, deformities, or discoloration.
- Stop charging if the charging process cannot be finished.
- In case of a leaking battery, keep the battery away from flames and do not touch it.
- Pack the battery tightly during transport.

Caution

- Do not use the battery where static electricity (more than 100V) exists that might damage the protection circuit of the battery.
- When children are using the system, parents or adults must ensure that they are using the system and battery correctly.
- Keep the battery away from flammable materials during charging and discharging.
- In case lead wires or metal objects come out from the battery, you must seal and insulate them completely.

Caution Texts Concerning Lithium Batteries

DANISH
ADVARSEL! Lithiumbatteri – Eksplosionsfare ved fejlagtig håndtering. Udskiftning må kun ske med batteri af samme fabrikat og type. Levér det brugte batteri tilbage til leverandøren.

NORWEGIAN
ADVARSEL: Eksplosjonsfare ved feilaktig skifte av batteri. Benytt samme batteritype eller en tilsvarende type anbefalt av apparatfabrikanten. Brukte batterier kasseres i henhold til fabrikantens instruksjoner.

SWEDISH
VARNING: Explosionsfara vid felaktigt batteribyte. Använd samma batterityp eller en ekvivalent typ som rekommenderas av apparattillverkaren. Kassera använt batteri enligt fabrikantens instruktion.

FINNISH
VAROITUS: Paristo voi räjähtää, jos se on virheellisesti asennettu. Vaihda paristo ainoastaan valmistajan suosittelemaan tyyppiin. Hävitä käytetty paristo valmistajan ohjeiden mukaisesti.

ENGLISH
CAUTION: Danger of explosion if battery is incorrectly replaced. Replace only with the same or equivalent type recommended by the equipment manufacturer. Discard used batteries according to manufacturer's instructions.

DEUTSCH
VORSICHT: Explosionsgefahr bei unsachgemäßem Austausch der Batterie. Ersatz nur durch denselben oder einen vom Hersteller empfohlenen gleich-wertigen Typ. Entsorgung gebrauchter Batterien nach Angaben des Herstellers.

FRENCH

ATTENTION: Il y a danger d'explosion s'il y a remplacement incorrect de la batterie. Remplacer uniquement avec une batterie du même type ou d'un type équivalent recommandé par le constructeur. Mettre au rebut les batteries usagées conformément aux instructions du fabricant.

Attention (for USA Users)

The product that you have purchased contains a rechargeable battery. The battery is recyclable. At the end of its useful life, under various state and local laws, it may be illegal to dispose of this battery into the municipal waste stream. Check with your local solid waste officials for details in your area for recycling options or proper disposal.

About the AC Adapter

- Use only the AC adapter supplied with your computer. Use of another type of AC adapter will result in malfunction and/or danger.
- Do not use the adapter in a high moisture environment. Never touch the adapter when your hands or feet are wet.
- Allow adequate ventilation around the adapter when using it to operate the device or charge the battery. Do not cover the AC adapter with paper or other objects that will reduce cooling. Do not use the AC adapter while it is inside a carrying case.
- Connect the adapter to a proper power source. The voltage requirements are found on the product case and/or packaging.
- Do not use the adapter if the cord becomes damaged.
- Do not attempt to service the unit. There are no serviceable parts inside. Replace the unit if it is damaged or exposed to excess moisture.

On the Use of the RF Device

USA and Canada Safety Requirements and Notices

IMPORTANT NOTE: To comply with FCC RF exposure compliance requirements, the antenna used for this transmitter must not be co-located or operating in conjunction with any other antenna or transmitter.

Radio Frequency Interference Requirements and SAR

This device meets the government's requirements for exposure to radio waves.

This device is designed and manufactured not to exceed the emission limits for exposure to radio frequency (RF) energy set by the Federal Communications Commission of the U.S. Government.

This device complies with FCC radiation exposure limits set forth for an uncontrolled environment.

EMC Requirements

This device uses, generates and radiates radio frequency energy. The radio frequency energy produced by this device is well below the maximum exposure allowed by the Federal Communications Commission (FCC).

This device complies with Part 15 of the FCC Rules. Operation is subject to the following two conditions:
(1) This device may not cause harmful interference.
(2) This device must accept any interference received, including interference that may cause undesired operation.

The FCC limits are designed to provide reasonable protection against harmful interference when the equipment is installed and used in accordance with the instruction manual and operated in a commercial environment. However, there is no guarantee that interference will not occur in a particular commercial installation, or if operated in a residential area.

If harmful interference with radio or television reception occurs when the device is turned on, the user must correct the situation at the user's own expense. The user is encouraged to try one or more of the following corrective measures:

- Reorient or relocate the receiving antenna.
- Increase the separation between the equipment and receiver.
- Connect the equipment into an outlet on a circuit different from that to which the receiver is connected.
- Consult the dealer or an experienced radio/TV technician for help.

CAUTION: The Part 15 radio device operates on a non-interference basis with other devices operating at this frequency. Any changes or modification to said product not expressly approved by the manufacturer could void the user's authority to operate this device.

Canada Radio Frequency Interference Requirements

To prevent radio interference to the licensed service, this device is intended to be operated indoors and away from windows to provide maximum shielding. Equipment (or its transmit antenna) that is installed outdoors is subject to licensing.

Pour empêcher que cet appareil cause du brouillage au service faisant l'objet d'une licence, il doit être utilisé à l'intérieur et devrait être placé loin des fenêtres afin de fournir un écran de blindage maximal. Si le matériel (ou son antenne d'émission) est installé à l'extérieur, il doit faire l'objet d'une licence.

European Union CE Marking and Compliance Notices

Statements of Compliance

English
This product follows the provisions of the European Directive 2014/53/EU.

Danish
Dette produkt er i overensstemmelse med det europæiske direktiv 2014/53/EU.

Dutch
Dit product is in navolging van de bepalingen van Europees Directief 2014/53/EU.

Finnish
Tämä tuote noudattaa EU-direktiivin 2014/53/EU määräyksiä.

French
Ce produit est conforme aux exigences de la Directive Européenne 2014/53/EU.

German
Dieses Produkt entspricht den Bestimmungen der Europäischen Richtlinie 2014/53/EU.

Greek
Το προϊόν αυτό πληροί τις προβλέψεις της Ευρωπαϊκής Οδηγίας 2014/53/EU.

Icelandic
Þessi vara stenst reglugerð Evrópska Efnahags Bandalagsins númer 2014/53/EU.

Italian
Questo prodotto è conforme alla Direttiva Europea 2014/53/EU.

Norwegian
Dette produktet er i henhold til bestemmelsene i det europeiske direktivet 2014/53/EU.

Portuguese
Este produto cumpre com as normas da Diretiva Européia 2014/53/EU.

Spanish
Este producto cumple con las normas del Directivo Europeo 2014/53/EU.

Swedish
Denna produkt har tillverkats i enlighet med EG-direktiv 2014/53/EU.

Notices

CE Max power:
WLAN 2.4G: 16.3 dBm
WLAN 5G: 17.38 dBm
BT: 2.9 dBm
NFC: -21.58 dBuA/m at 10m
WWAN: 23.89 dBm

The device is restricted to indoor use only when operating in the 5150 to 5350 MHz frequency range.

	AT	BE	BG	HR	CY	CZ	DK
	EE	FI	FR	DE	EL	HU	IE
	IT	LV	LT	LU	MT	NL	PL
	PT	RO	SK	SI	ES	SE	UK

	Waste Electrical and Electronic Equipment (WEEE) This symbol means that according to local laws and regulations your product and/or its battery shall be disposed of separately from household waste. When this product reaches its end of life, take it to a collection point designated by local authorities. Proper recycling of your product will protect human health and the environment.

User Notification of Take-back Service

To Institutional (B2B) Users in United States:

Getac believes in providing our institutional customers with easy-to-use solutions to recycle your Getac-brand products for free. Getac understands the institutional customers will likely be recycling multiple items at once and as such. Getac wants to make the recycling process for these larger shipments as streamlined as possible. Getac works with recycling vendors with the highest standards for protecting our environment, ensuring worker safety, and complying with global environmental laws. Our commitment to recycling our old equipment grows out of our work to protect the environment in many ways.

Please see the product type below for information on Getac product, battery and packaging recycling in USA.

- For Product Recycling:
  Your portable Getac products contain hazardous materials. While they pose no risk to you during normal use, they should never be disposed with other wastes. Getac provides a free take-back service for recycling your Getac products. Our electronics recycler will provide competitive bids for recycling non-Getac products as well.

- For Battery Recycling:
  The batteries used to power your portable Getac products contain hazardous materials. While they pose no risk to you during normal use, they should never be disposed with other wastes. Getac provides a free take-back service for recycling your batteries from Getac products.

- For Packaging Recycling:
  Getac has chosen the packaging materials used to transport our products carefully, to balance the requirements of shipping the product to you safely while minimizing the amount of material used. The materials used in our packaging are designed to be recycled locally.

If you have the above for recycling, please visit our website
https://us.getac.com/aboutgetac/environment.html

ENERGY STAR 7.0

ENERGY STAR® is a government program that offers businesses and consumers energy-efficient solutions, making it easy to save money while protecting the environment for future generations.

Please reference ENERGY STAR® related information from http://www.energystar.gov.

As an ENERGY STAR® Partner, Getac Technology Corporation has determined that this product meets the ENERGY STAR® guidelines for energy efficiency.

An ENERGY STAR® qualified computer uses 70 % less electricity than computers without enabled power management features.

Earning the ENERGY STAR®

- When every home office is powered by equipment that has earned the ENERGY STAR®, the change will keep over 289 billion pounds of greenhouse gases out of the air.
- If left inactive, ENERGY STAR® qualified computers enter a low-power mode and may use 15 watts or less. New chip technologies make power management features more reliable, dependable, and user-friendly than even just a few years ago.
- Spending a large portion of time in low-power mode not only saves energy, but helps equipment run cooler and last longer.
- Businesses that use ENERGY STAR® enabled office equipment may realize additional savings on air conditioning and maintenance.

- Over its lifetime, ENERGY STAR® qualified equipment in a single home office (e.g., computer, monitor, printer, and fax) can save enough electricity to light an entire home for more than 4 years.
- Power management ("sleep settings") on computers and monitors can result in much savings annually.

Remember, saving energy prevents pollution

Because most computer equipment is left on 24 hours a day, power management features are important for saving energy and are an easy way to reduce air pollution. By using less energy, these products help lower consumers' utility bills, and prevent greenhouse gas emissions.

Getac Product Compliance

All Getac products with ENERGY STAR® logo comply with the ENERGY STAR® standard, and the power management feature is enabled by default. As recommended by the ENERGY STAR® program for optimal energy savings, the computer is automatically set to sleep after 15 minutes (in battery mode) and 30 minutes (in AC mode) of user inactivity. To wake up the computer, press the power button.

If you want to configure power management settings such as inactivity time and ways to initiate/end Sleep mode, go to Power Options by right-clicking the battery icon on the Windows taskbar and then selecting Power Options in the pop-up menu.

Please visit http://www.energystar.gov/powermanagement for detail information on power management and its benefits to the environment.

NOTE: The tablet models with the RFID module (optional) do not comply with ENERGY STAR®.

Battery Recycling

For the U.S. and Canada only:

To recycle the battery, please go to the RBRC Call2Recycle website or use the Call2Recycle Helpline at 800-822-8837.

Call2Recycle® is a product stewardship program providing no-cost battery and cellphone recycling solutions across the U.S. and Canada. Operated by Call2Recycle, Inc., a 501(c)4 nonprofit public service organization, the program is funded by battery and product manufacturers committed to responsible recycling. See more at: http://www.call2recycle.org

This device contains licence-exempt transmitter(s)/receiver(s) that comply with Innovation, Science and Economic Development Canada's licence-exempt RSS(s). Operation is subject to the following two conditions:

1. This device may not cause interference.

2. This device must accept any interference, including interference that may cause undesired operation of the device.

L'émetteur/récepteur exempt de licence contenu dans le présent appareil est conforme aux CNR d'Innovation, Sciences et Développement économique Canada applicables aux appareils radio exempts de licence. L'exploitation est autorisée aux deux conditions suivantes :

1. L'appareil ne doit pas produire de brouillage;

2. L'appareil doit accepter tout brouillage radioélectrique subi, même si le brouillage est susceptible d'en compromettre le fonctionnement.

The device for operation in the band 5150-5250 MHz is only for indoor use to reduce the potential for harmful interference to co-channel mobile satellite systems.

Les dispositifs fonctionnant dans la bande 5150-5250 MHz sont réservés uniquement pour une utilisation à l'intérieur afin de réduire les risques de brouillage préjudiciable aux systèmes de satellites mobiles utilisant les mêmes canaux.

ISED Radiation Exposure Statement

The products are compliant with SAR for general population/uncontrolled exposure limits in IC RSS-102 and has been tested in accordance with the measurement methods and procedures specified in IEEE 1528. Maintain at least 0mm distance for body-warn condition.

Le produit est le respect de SAR pour la population générale / limites d'exposition incontrôlée de CNR-102 et a été testé en conformité avec les méthodes et procédures de mesure spécifiées dans la norme IEEE 1528. Maintenir au moins 0mm à distance pour la condition physique-garde.