Getac

F110

USER MANUAL

Rugged Mobile Computing Solutions

October 2023

TRADEMARKS
All brand and product names are trademarks or registered trademarks of their respective companies.

NOTE
The information in this manual is subject to change without notice.
For the latest version of the manual, please visit the Getac website at www.getac.com.

Table of Contents

Chapter 1 **Getting Started 1**
Getting the Tablet PC Running 2
Unpacking 2
Installing Battery Packs 3
Connecting to AC Power 4
Using the Tether 5
Turning On and Off the Tablet PC 6
Taking a Look at the Tablet PC 7
Front Components 7
Rear Components 9
Left-Side Components 10
Bottom Components 10

Chapter 2 **Operating Your Tablet PC 11**
Navigating on the Screen 12
Using the Touchscreen 12
Using Network and Wireless Connections 15
Using the WLAN 15
Using the Bluetooth Feature 16

Chapter 3 **Managing Power 17**
AC Adapter 18
Battery Pack 19
Charging the Battery Pack 19
Initializing the Battery Pack 20
Checking the Battery Level 20
Battery Low Signals and Actions 21
Replacing the Battery Pack 21
Power-Saving Tips 24

Chapter 4 **Expanding Your Tablet PC 25**
Connecting a USB Device 26
USB Type-A 26
USB Type-C 26

Connecting an Audio Device 27

Chapter 5 **Using BIOS Setup 28**
When and How to Use 29
Menu Descriptions 30
Information Menu 30
Main Menu 30
Advanced Menu 30
Security Menu 32
Boot Menu 33
Exit Menu 33

Chapter 6 **Using Getac Software 34**
OSD Control Panel 35
G-Manager 36
G-Camera (Optional) 37

Chapter 7 **Care and Maintenance 38**
Protecting the Tablet PC 39
Using an Anti-Virus Strategy 39
Using the Cable Lock 39
Taking Care of the Tablet PC 40
Location Guidelines 40
General Guidelines 40
Cleaning Guidelines 41
Battery Pack Guidelines 41
Touchscreen Guidelines 42
When Traveling 44

Chapter 8 **Troubleshooting 45**
Preliminary Checklist 46
Solving Common Problems 47
Battery Problems 47
Bluetooth Wireless Transmission Problems 47
Display Problems 48
Hardware Device Problems 48
Power Management Problems 49
Software Problems 49
Sound Problems 49
Startup Problems 50
WLAN Problems 50
Other Problems 52
Resetting the Tablet PC 53
System Recovery 54
Using Windows RE 54

Using Recovery Partition 55
Using the Driver Disc (Optional)..... 56

Appendix A **Specifications 57**

Appendix B **Regulatory Information 59**
Safety Notices 60
About the Battery 60
About the AC Adapter 62
Heat Related Concerns..... 63
North America 64
USA..... 64
Canada..... 67
User Notification of Take-back Service..... 68
Europe Marking and Compliance Notices..... 70
Statements of Compliance..... 70
Restriction of Hazardous Substances (RoHS) Directive..... 71
ENERGY STAR..... 73
About Battery and External Enclosure Replacement..... 74
Battery..... 74
External Enclosure 74

Chapter 1

Getting Started

This chapter first tells you step by step how to get the Tablet PC up and running. Then, you will find a section briefly introducing the external components of the Tablet PC.

Getting the Tablet PC Running

Unpacking

After unpacking the shipping carton, you should find these standard items:

● F110 Tablet PC	
● AC adapter	● AC power cord
● Battery pack x 2	● Stylus ● Tether
● Document(s)	● Driver disc (optional)

Inspect all the items. If any item is damage or missing, notify your dealer immediately.

NOTE: Specific models do not have the AC adapter and power cord as standard items. To purchase the AC adapter kit for your model, contact a Getac authorized distributor. (Check https://www.getac.com/en/contact/ for contact information.)

Installing Battery Packs

1. Locate the battery cover. Slide the two small locks outward to the unlocked position (🔓) (❶) and then release the latch (🔓) (❷) to open the battery cover.

2. Note the orientation of the battery pack. Hold the battery pack at an angle and insert its small tabs to the corresponding notches in the battery compartment. Then, lift the yellow protection sheet in the battery compartment and plug the battery connector.

3. Proceed with the other battery pack.

4. Hold the battery cover at an angle and insert the cover's small tabs to the corresponding notches on the Tablet PC; then close the cover. Press the

four small dots (❶) so that the cover clicks into place. Engage the cover latch (🔒) (❷) and slide the two small locks inward to the locked position (🔒) (❸).

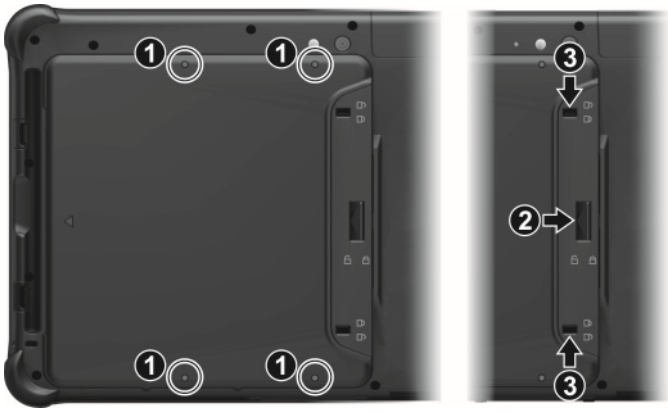

Connecting to AC Power

CAUTION: Use only the AC adapter included with your Tablet PC. Using other AC adapters may damage the Tablet PC.

NOTE:

- The battery pack is shipped to you in power saving mode that protects it from charging/discharging. It will get out of the mode to be ready for use when you install the battery pack and connect AC power to the Tablet PC for the very first time.
- When the AC adapter is connected, it also charges the battery pack. For information on using battery power, see Chapter 3.

You must use AC power when starting up the Tablet PC for the very first time.

1. Plug the DC cord of the AC adapter to the power connector of the Tablet PC (❶).

2. Plug the female end of the AC power cord to the AC adapter and the male end to an electrical outlet (❷).

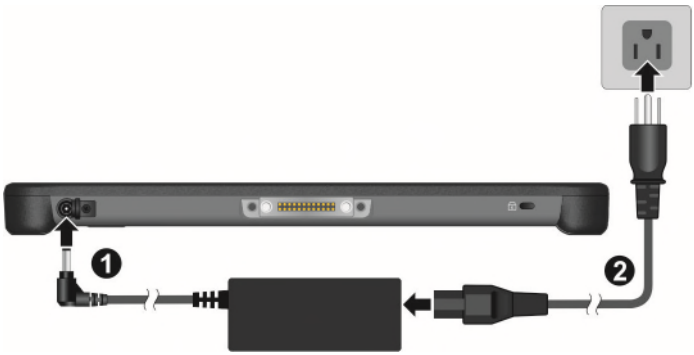

NOTE: The power cord type varies with countries. The look of your power cord and electrical outlet might not match the one shown in this document.

3. Power is being supplied from the electrical outlet to the AC adapter and onto your Tablet PC. Now, you are ready to turn on the Tablet PC.

Using the Tether

A tether is provided for attaching the stylus to your Tablet PC.

1. Insert one of the tether's loop ends through the hole of the stylus (as indicated by ❶ below). Then, insert the other end through the first loop (as indicated by ❷ below) and pull it tight.

2. Insert the other loop end to the tether hole on the Tablet PC (as indicated by ❶ below). Then, insert the stylus end through the loop (as indicated by ❷ below) and pull it tight.

Turning On and Off the Tablet PC

Turning On

Press the power button (⏻). The Windows operating system should start.

NOTE: Tapping the screen during startup may invoke a pre-boot menu (unless the default settings have been changed). If the menu appears, simply select **Continue**.

Turning Off

When you finish a working session, you can stop the system by turning off the power or leaving it in Sleep or Hibernation mode:

To…	Do this…
Power off (Shutdown)	Tap **Start** → ⏻ **Power** → **Shut down**.
Sleep	Press the power button.* -or- Tap **Start** → ⏻ **Power** → **Sleep**.
Hibernate	By default, this option is not shown in the Start menu. If you want to use the feature, set up accordingly in Windows settings.

* “Sleep” is the default setting of the power button. You may change what the power button does in Windows settings.

Taking a Look at the Tablet PC

NOTE: Depending on the model you purchased, the appearance of your Tablet PC may not be exactly the same as those shown in this manual.

CAUTION: You need to open the protective covers to access the connectors. When not using a connector, make sure to close the cover completely for water- and dust-proof integrity. (Engage the locking mechanism if existing.)

Front Components

Ref	Component	Description
1	**Camera lens** (optional)	Allows you to use the camera function. When the camera lens is in use, the indicator beside it lights up.
2	**Light sensor**	Senses the ambient light for automatic adjustments of the display backlight.
3	**Indicators**	
	Power	Lights blue when the power is on.
		Blinks blue when the system is in Sleep mode.
	Battery Charge	Lights amber when the battery is being charged.
		Lights green when battery charging is completed.

Ref	Component	Description	
		Blinks green to indicate the battery's built-in high temperature protection mechanism is activated. **CAUTION:** Do not remove the battery during this period.	
		Blinks red (once per second) when the battery's capacity is below 10%.	
		Blinks red rapidly (once per 0.5 second) when there is a thermal protection problem. Ask for repair service in case this happens.	
		Blinks amber when the battery charging is in an abnormal state. Replace the battery in case this happens.	
	RF (Radio Frequency)	Lights blue when the RF radio of any RF feature is on.	
❹	**Power button**	Turns the power on or off. (The default "off" state is "Sleep mode.")	
❺	**Extra button**	The default function is **Camera** or **Trigger** depending on your model.	
		Camera	Starts the G-Camera application.
		Trigger	Serves as the trigger button for the barcode reader if your model has the module.
❻	**P1 button**	Opens or closes the OSD Control Panel.	
		When pressed longer: Serves as the **Ctrl**+**Alt**+**Del** keyboard keys.	
❼	**Up/Down button**	(+) increases the sound volume. (−) decreases the sound volume.	
❽	**Microphone**	Receives sound and voice to record voice.	
❾	**Touchscreen**	Displays and receives information for the Tablet PC.	
❿	**Windows Logo button**	Opens or closes the Start menu.	

NOTE:

- The hardware buttons (except the power button) can be re-defined using G-Manager.

- Some of the hardware buttons provide keyboard key functions on “POST/BIOS Setup/Non-ACPI” occasions. (See “Button Functions on Special Occasions” in Appendix A for information.)

Rear Components

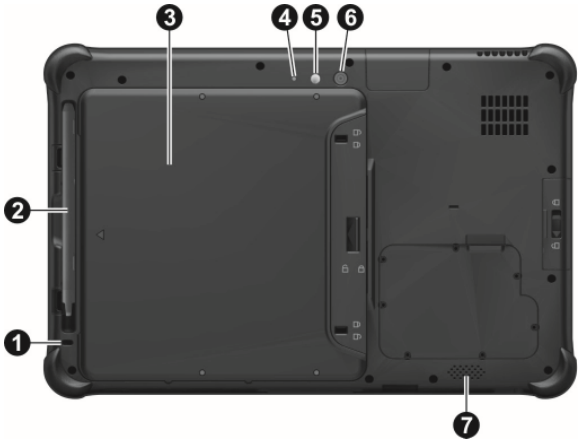

Ref	Component	Description
❶	**Tether hole**	Stylus can be tethered to this hole.
❷	**Stylus**	Serves as the input device by tapping on the touchscreen to make selections and enter information.
❸	**Battery pack cover**	Inside are two battery packs.
❹	**Camera indicator** (optional)	Lights up when the camera lens beside it is in use.
❺	**Flash** (optional)	Provides extra light when taking pictures.
❻	**Camera lens** (optional)	Allows you to use the camera function.
❼	**Speaker**	Sends out sound and voice from your Tablet PC.

Left-Side Components

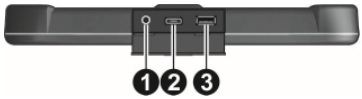

Ref	Component	Description
❶	**Combo audio connector**	Connects a set of headphones or external speakers with amplifier.
		Supports a headset microphone with 4-pole TRRS 3.5mm jack.
❷	**USB 3.2 Gen 2 Type-C port**	Connects a USB device that supports USB Type-C connection.
❸	**USB 3.2 Gen 2 port**	Connects a USB device.

Bottom Components

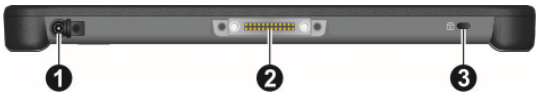

Ref	Component	Description
❶	**Power connector**	Connects the AC adapter.
❷	**Docking connector**	Connects to the docking station (available as an option).
❸	**Kensington lock**	Locks the Tablet PC to a stationary object for security.

Chapter 2

Operating Your Tablet PC

This chapter provides information about the use of the Tablet PC.

If you are new to computers, reading this chapter will help you learn the operating basics. If you are already a computer user, you may choose to read only the parts containing information unique to your Tablet PC.

CAUTION:

- Do not expose your skin to the product when operating it in a very hot or cold environment.
- The product can get uncomfortably warm when you use it in high temperatures. As a safety precaution in such a circumstance, do not place the product on your lap or touch it with your bare hands for extended periods of time. Prolonged body contact can cause discomfort and potentially a burn.
- When the product is placed flat on a table top for work, the back surface can get hot after long working hours. Take precautions if you need to carry the product around while it is hot to the touch. Depending on your model, a carrying handle or strap may be available as an option. You can use the handle or strap to carry the product.

Navigating on the Screen

The screen of your Tablet PC is touch-sensitive. You can control the location of the cursor/pointer on the screen using the included stylus or your finger to communicate with the Tablet PC.

CAUTION: Do not use a sharp object such as a ballpoint pen or pencil on the touchscreen. Doing so may damage the touchscreen surface. Use the included stylus or your finger.

NOTE: An optical film has been attached to the screen before shipment. The film is a consumable, which will be worn out by possible scratches. You can purchase a new one when replacement is required.

Using the Touchscreen

Your Tablet PC has a capacitive touchscreen. This type of touchscreen responds to objects that have conductive properties, such as fingertips and a capacitive-tipped stylus.

You can change the touchscreen sensitivity settings to suit your scenario. Double-tap the **Touch Screen Mode** shortcut on Windows desktop to open the settings menu and select one of the options (as shown below).

Select this mode when liquids, such as raindrops, are falling on the screen and should be rejected as input. Works best with fingertips.

Has a higher sensitivity to allow use with gloves (referring to warm gloves or work gloves, not referring to touchscreen-capable gloves).

Enables simultaneous use with Getac stylus or finger touch. (You must use the stylus supplied with your model.)

NOTE:

- In high temperatures (above 60 ºC / 140 °F), set the mode to **Finger** instead of **Glove** or **Stylus** mode.
- If liquid is spilled on the touchscreen causing a wet area, the area will stop responding to any inputs. For the area to function again, you must dry it.

The following table shows how you use the touchscreen to obtain equivalent mouse functions.

Term/Action	Equivalent Mouse Function
Tap: Touch the screen once.	Click/Point
Double-tap: Touch the screen twice rapidly.	Double-click
Tap and hold: Tap and hold until a popup menu appears.	Right-click
Drag: Hold the stylus (or finger) on the screen and drag across the screen until reaching your destination.	Drag

Using Multi-touch Gestures

You can interact with your Tablet PC by placing two fingers on the screen. The movement of the fingers across the screen creates “gestures,” which send commands to the Tablet PC.

Here are the multi-touch gestures that you can use:

Gestures	Actions (= finger down; = finger up)	Descriptions
Pan (Scroll)	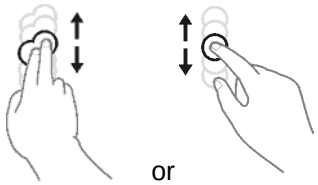 or Drag 1 or 2 fingers up or down.	Use panning to see another part of a page that has scroll bars.
Zoom (Pinch)	Move two fingers apart/toward each other.	Use zooming to make an item (a photo for example) on the screen larger or smaller. The gesture works in applications that support mouse wheel zooming.

Gestures	Actions (= finger down; = finger up)	Descriptions
Rotate	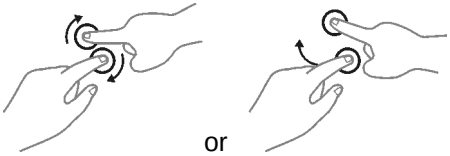 or Move two fingers in opposing directions. -or- Use one finger to pivot around another.	Use rotating to move a picture or other item on the screen in a circular direction (clockwise or counter-clockwise). The gesture works in applications that support the specific gesture.
Press and Tap	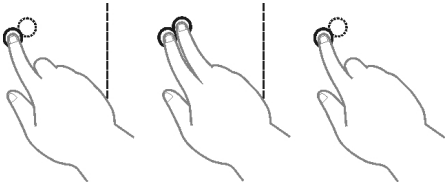 Press on target and tap using a second finger.	Use press and tap to access the shortcut menu.
Two-finger Tap	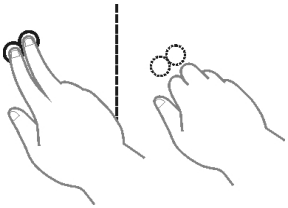 Tap two fingers at the same time (where the target is in the midpoint between the fingers).	The function is defined by applications that support the specific gesture.
Flicks	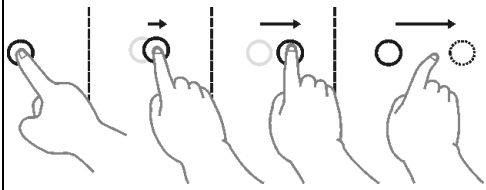 Make quick drag gestures in the desired direction.	Flick left or right to navigate back and forward in a browser and other applications. The gesture works in most applications that support back and forward.

Using Network and Wireless Connections

Using the WLAN

The WLAN (Wireless Local Area Network) module supports IEEE 802.11ac, compatible with 802.11a/b/g/n.

Turning On/Off the WLAN Radio

To turn on the WLAN radio:

Select the network icon in the lower right of the taskbar. Then, select the **Wi-Fi** button.

To turn off the WLAN radio:

You can turn off the WLAN radio the same way you turn it on.

If you want to quickly turn off all wireless radio, simply switch on Airplane mode. You can control the Airplane mode using one of the below methods.

- Select the network icon in the lower right of the taskbar. Then, select the **Airplane mode** button.
- Use the **Airplane Mode** button in the OSD Control Panel.

Connecting to a WLAN Network

1. Make sure that the WLAN function is enabled (as described above).
2. Tap the network icon in the lower right of the task bar.
3. In the list of available wireless networks, tap a network, and then tap **Connect**.
4. Some networks require a network security key or passphrase. To connect to one of those networks, ask your network administrator or Internet service provider (ISP) for the security key or passphrase.

For more information on setting a wireless network connection, refer to Windows online help.

Using the Bluetooth Feature

The Bluetooth technology allows short-range wireless communications between devices without requiring a cable connection. Data can be transmitted through walls, pockets and briefcases as long as two devices are within range.

Turning On/Off the Bluetooth Radio

To turn on the Bluetooth radio:

Go to **Settings → Bluetooth & devices**. Slide the **Bluetooth** switch to the **On** position.

To turn off the Bluetooth radio:

You can turn off the Bluetooth radio the same way you turn it on.

If you want to quickly turn off all wireless radio, simply switch on Airplane mode. You can control the Airplane mode using one of the below methods.

- Select the network icon in the lower right of the taskbar. Then, select the **Airplane mode** button.
- Use the **Airplane Mode** button in the OSD Control Panel.

Connecting to another Bluetooth Device

1. Make sure that the Bluetooth function is enabled (as described above).
2. Make sure that the target Bluetooth device is turned on, discoverable and within close range. (See the documentation that came with the Bluetooth device.)
3. Go to **Settings → Bluetooth & devices → Add device → Bluetooth**.
4. Select the device you want to connect from the search results.
5. Depending on the type of Bluetooth device that you want to connect to, you will need to enter the pertinent information.

For detailed information on using the Bluetooth feature, see Windows' online Help**.**

Chapter 3

Managing Power

Your Tablet PC operates either on external AC power or on internal battery power.

This chapter tells you how you can effectively manage power. To maintain optimal battery performance, it is important that you use the battery in the proper way.

AC Adapter

CAUTION:

- The AC adapter is designed for use with your Tablet PC only. Connecting the AC adapter to another device can damage the adapter.
- The AC power cord supplied with your Tablet PC is for use in the country where you purchased your Tablet PC. If you plan to go overseas with the Tablet PC, consult your dealer for the appropriate power cord.
- When you disconnect the AC adapter, disconnect from the electrical outlet first and then from the Tablet PC. A reverse procedure may damage the AC adapter or Tablet PC.
- When unplugging the connector, always hold the plug head. Never pull on the cord.

The AC adapter serves as a converter from AC (Alternating Current) to DC (Direct Current) power because your Tablet PC runs on DC power, but an electrical outlet usually provides AC power. It also charges the battery pack when connected to AC power.

The adapter operates on any voltage in the range of 100 V – 240 V AC.

Battery Pack

Your Tablet PC has two battery packs. The battery pack is the internal power source for the Tablet PC. It is rechargeable using the AC adapter.

CAUTION: Always keep both battery packs installed, especially when the Tablet PC is running on battery power. A battery pack can be removed only when it is not being charged/discharged or if you are hot-swapping the battery pack.

Charging the Battery Pack

NOTE:

- Charging will not start if the battery's temperature is outside the allowed range, which is between 0 °C (32 °F) and 50 °C (122 °F). Once the battery's temperature meets the requirements, charging automatically resumes.
- During charging, do not disconnect the AC adapter before the battery has been fully charged; otherwise you will get a prematurely charged battery.
- The battery has a high temperature protection mechanism which limits the maximum charge of the battery to 80% of its total capacity in the event of high temperature conditions. In such conditions, the battery will be regarded as fully charged at 80% capacity.
- The battery level may automatically lessen due to the self-discharge process, even when the battery pack is fully charged. This happens no matter if the battery pack is installed in the Tablet PC.

To charge the battery pack, connect the AC adapter to the Tablet PC and an electrical outlet. The Battery Charge Indicator ( ) on the Tablet PC glows amber to indicate that charging is in progress. You are advised to keep the Tablet PC power off while the battery is being charged. When the battery is fully charged, the Battery Charge Indicator glows green.

The two battery packs are charged in sequence (**Battery 1** first and then **Battery 2**). It takes approximately 5 hours to fully charge the two battery packs when the power is off and approximately 6 hours when the power is on (may need a longer charging time at lower temperatures).

CAUTION: After the Tablet PC has been fully recharged, do not immediately disconnect and reconnect the AC adapter to charge it again. Doing so may damage the battery.

Initializing the Battery Pack

You need to initialize a new battery pack before using it for the first time or when the actual operating time of a battery pack is much less than expected. Initializing is the process of fully charging, discharging, and then charging. It can take several hours.

The G-Manager program provides a tool called “Battery Recalibration” for the purpose. (See “The OSD (On Screen Display) Control Panel provides a user-friendly interface for you to quickly activate or operate certain functions on your Tablet PC with a simple tap of the screen.

To open the OSD Control Panel, start the program named **OSDC**. The following screen appears.

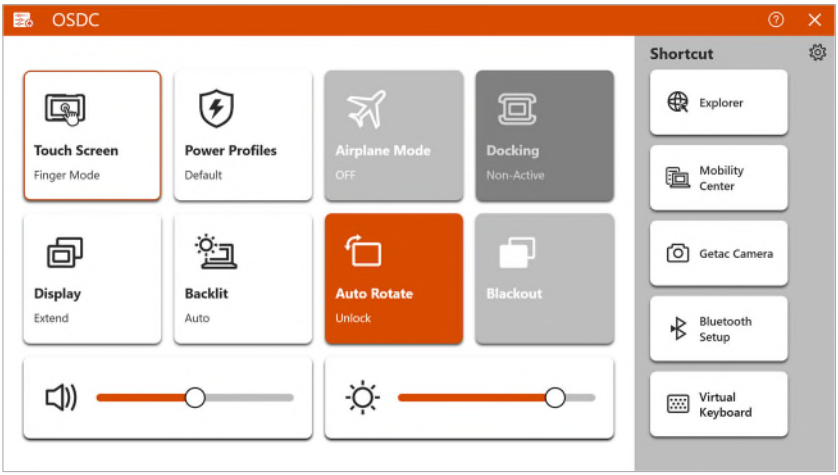

For detailed information on the program, see the program’s online help.

G-Manager” in Chapter 6.)

Checking the Battery Level

NOTE: Any battery level indication is an estimated result. The actual operating time can be different from the estimated time, depending on how you are using the Tablet PC.

The operating time of a fully charged battery pack depends on how you are using the Tablet PC. When your applications often access peripherals, you will experience a shorter operating time.

The two battery packs are discharged in parallel.

By Operating System

You can check the approximate battery level using the battery meter function of the operating system. To read the battery level in Windows, tap the battery icon on the taskbar.

By Gas Gauge

On the exterior side of the battery pack is a gas gauge for displaying the estimated battery charge. When the battery pack is not installed in the Tablet PC and you want to know the battery charge, you can press the push-button to see the number of LEDs that light up. Each LED represents 20% charge.

Battery Low Signals and Actions

The battery icon changes appearance to display the current state of the battery.

Battery Icon	Battery Level	Description
	Discharging	The icon shows the charge remaining in 10-percent increments until the charge reaches the low-battery level.
	Low	The battery charge has reached the low-battery level.
	Critically low	The battery charge has reached the critical battery level. By default, Windows will display a notification and put your Tablet PC into Hibernation.

When the battery is low, the Tablet PC's Battery Charge Indicator ( ) also blinks red to alert you to take actions.

Always respond to low-battery by connecting the AC adapter, placing your Tablet PC in Hibernation mode, or turning off the Tablet PC.

Replacing the Battery Pack

CAUTION:

- There is danger of explosion if the battery is incorrectly replaced. Replace the battery only with the Tablet PC manufacturer's battery packs. Discard used batteries according to the dealer's instructions.
- Do not attempt to disassemble the battery pack.
- A battery pack can get hot due to long working hours. Do not touch a hot battery pack with bare hands. After removing a battery pack, put it in a well-ventilated area.

NOTE: You can hot swap one battery pack while the other one is supplying the power. The appropriate temperature range for hot swapping the battery pack is between -21°C (-5.8 °F) and 45 °C (113 °F).

To replace the battery pack, follow these steps:

1. Skip this step if you are hot swapping the battery pack.

   Turn off the Tablet PC and disconnect the AC adapter. After turning off the Tablet PC, allow a cool-down time of at least 5 minutes before removing the battery pack.

2. Locate the battery cover. Slide the two small locks outward to the unlocked position ( ) (❶) and then release the latch ( ) (❷) to open the battery cover.

3. Pull the ribbon strip to lift the battery pack off the compartment.

4. Fit another battery pack into place. Note the orientation of the battery pack. Hold the battery pack at an angle and insert its small tabs to the corresponding notches in the battery compartment. Then, lift the yellow protection sheet in the battery compartment and plug the battery connector.
5. Hold the battery cover at an angle and insert the cover's small tabs to the corresponding notches on the Tablet PC; then close the cover. Press the four small dots (❶) so that the cover clicks into place. Engage the cover latch (🔓) (❷) and slide the two small locks inward to the locked position (🔒) (❸).

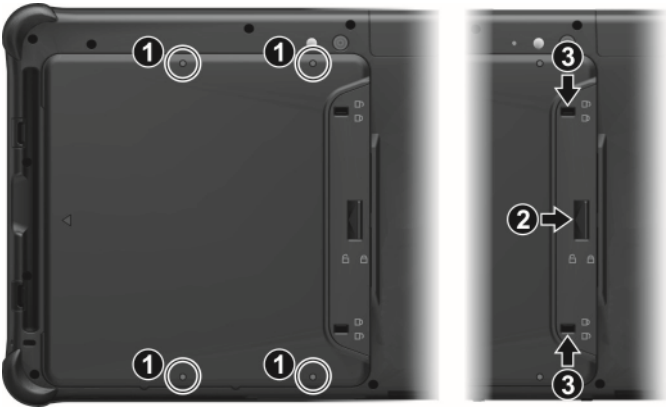
1
1
1
1
3
2
3

Power-Saving Tips

Aside from enabling your Tablet PC's power saving mode, you can do your part to maximize the battery's operating time by following these suggestions.

- Do not disable Power Management.
- Decrease the LCD brightness to the lowest comfortable level.
- Shorten the length of time before Windows turn off the display.
- When not using a connected device, disconnect it.
- Turn off the wireless radio if you are not using the wireless module (such as WLAN or Bluetooth).
- Turn off the Tablet PC when you are not using it.

Chapter 4

Expanding Your Tablet PC

You can expand the capabilities of your Tablet PC by connecting other peripheral devices.

When using a device, be sure to read the instructions accompanying the device together with the relevant section in this chapter.

Connecting a USB Device

To unlock the left-side cover:

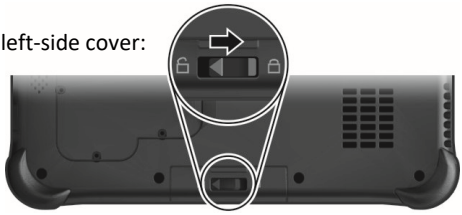

USB Type-A

Your Tablet PC has a USB 3.2 Gen 2 port for connecting USB devices, such as a digital camera, scanner, printer, and mouse. USB 3.2 Gen 2 supports a transfer rate up to 10 Gbit/s.

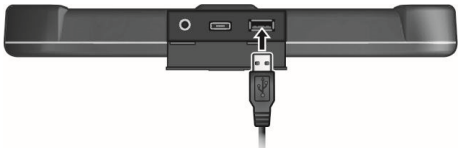

USB Type-C

“USB Type-C” (or simply “USB-C”) is a physical USB connector format that features small size and free orientation. This port supports:

- USB 3.2 Gen 2 (up to 10 Gbps)
- DisplayPort over USB-C
- USB Power Delivery (5V/3A)

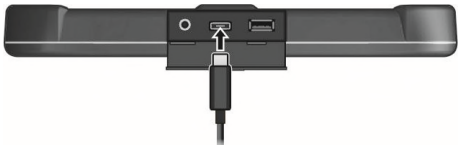

NOTE: You can still connect a USB device that has traditional connector types to the USB-C connector as long as you have a proper adapter.

Connecting an Audio Device

The audio combo connector is the “4-pole TRRS 3.5mm” type so you can connect a compatible headset microphone.

SAFETY WARNING:

To prevent possible hearing damage, do not listen at high volume levels for long periods.

Chapter 5

Using BIOS Setup

BIOS Setup Utility is a program for configuring the BIOS (Basic Input/ Output System) settings of the computer. BIOS is a layer of software, called firmware, that translates instructions from other layers of software into instructions that the computer hardware can understand. The BIOS settings are needed by your computer to identify the types of installed devices and establish special features.

This chapter tells you how to use the BIOS Setup Utility.

When and How to Use

NOTE:

- The actual setting items on your model may differ from those described in this chapter.
- The availability of some setting items depends on the Windows version your computer is running.

You need to run BIOS Setup Utility when:

- You see an error message on the screen requesting you to run BIOS Setup Utility.
- You want to restore the factory default BIOS settings.
- You want to modify some specific settings according to the hardware.
- You want to modify some specific settings to optimize the system performance.

To run BIOS Setup Utility:

Method 1: During system startup when the logo screen appears, tap the screen or press the **Windows Logo** button on your Tablet PC. In the pre-boot menu that appears, select **Setup Utility**.

NOTE:

- If you don't want any accidental tapping to invoke the pre-boot menu, you can disable this method by setting the "**Screen Tapping for Boot Options**" item in the BIOS Setup Utility.
- For Windows models, the time period in which you can use the above method is extremely short. You can use the other method as described below.

Method 2: Go to **Settings** → **System** → **Recovery**. Under **Advanced startup**, tap **Restart now**. In the boot options menu, tap **Troubleshoot** → **Advanced options** → **UEFI Firmware Settings**. Tap **Restart**.

Menu Descriptions

Information Menu

The Information menu contains the basic configuration information of the system. There are no user-definable items in this menu.

NOTE: The “Asset Tag” information appears when you have entered the asset number for this Tablet PC using the asset management program. The program is provided in the **Asset tag** folder of the Driver disc.

Main Menu

The Main menu contains the various system settings.

- **System Date** sets the system date.
- **System Time** sets the system time.

Advanced Menu

The Advanced menu contains the advanced settings.

- **Wake Up Capability**
  Home Button Wake Up from Sleep allows the Home button to wake up the system from Sleep mode. The Home button refers to the Windows logo ( ) key. This can be a hardware button on your model or the Windows logo key on the detachable keyboard (available as an option).

NOTE: By default, your model does not have a hardware button defined as the Windows logo key. If needed, you can use the G-Manager program to change the function of a hardware button to **WinKey** (meaning Windows logo key).

- **Power Button Delay** sets power button delay time (1 second or 2 seconds) so that accidental touching of the power button does not cause undesired operation. You can also disable the delay.
- **AC Initiation** sets if connecting AC power will automatically start or resume the system.
- **Screen Tapping for Boot Options** sets if tapping the screen during startup will invoke the boot options menu which provides access to some pre-boot

operations. If disabled, tapping the screen during startup has no effect to the system's booting process.

- **MAC Address Pass Through** allows the system specific MAC address to pass through a connected dock, meaning the dock specific MAC address will be overridden by the system specific MAC address. This feature only works for UEFI PXE boot.

- **Active Management Technology Support** (This item appears only on models supporting vPro.)
  Intel AMT Support enables or disables Intel® Active Management Technology BIOS extension execution. AMT allows the system administrator to access an AMT featured computer remotely.
  Intel AMT Setup Prompt determines whether the prompt for entering Intel MEBx Setup appears or not during POST.

- **Virtualization Technology Setup**
  Intel(R) Virtualization Technology enables or disables Intel® VT (Intel Virtualization Technology) feature which provides hardware support for processor virtualization. When enabled, a VMM (Virtual Machine Monitor) can utilize the additional hardware virtualization capabilities provided by this technology.
  Intel(R) VT for Directed I/O (VT-d) enables or disables VT-d (Intel® Virtualization Technology for Directed I/O). When enabled, VT-d helps enhance Intel platforms for efficient virtualization of I/O devices.

- **Device Configuration** enables or disables several hardware components. The items available for setting depend on your model.

- **Diagnostics and System Tester**
  H2ODST Tool performs system baseline check.

- **Recovery Partition** allows you to restore your Windows system to the factory default state by using the "recovery partition" feature. Recovery partition is a portion of your hard disk drive that is set aside by the manufacturer to hold the original image of your system.

WARNING:

- Using this feature will reinstall Windows to your system and configure it to the system's factory default settings. All data on the hard disk drive will be lost.
- Make sure that power is not interrupted during the recovery process. An unsuccessful recovery may result in Windows startup problems.

- **Windows RE** launches Windows Recovery Environment. Windows RE (Windows Recovery Environment) is a recovery environment that provides recovery, repair, and troubleshooting tools in Windows.

Security Menu

The Security menu contains the security settings, which safeguard your system against unauthorized use.

NOTE:

- You can set the user password only when the supervisor password has been set.
- If both the supervisor and user passwords are set, you can enter any of them for starting up the system and/or entering BIOS Setup. However, the user password only allows you to view/change the settings of certain items.
- A password setting is applied right after it is confirmed. To cancel a password, leave the password empty by pressing the **Enter** key.

- **Set Supervisor/User Password** sets the supervisor/user password. You can set the supervisor/user password to be required for starting up the system and/or entering BIOS Setup.

- **Strong Password** enables or disables strong password. When enabled, the password you set must contain at least one upper-case letter, one lower-case letter, and one digit.

- **Password Configuration** sets the minimum password length. Enter the number in the input field and select **[Yes]**. The number should be between 4 and 64.

- **Password on Boot** allows you to enable or disable the entering of password for booting up your system.

- **Secure Boot Configuration** You can access this item only after setting the **Supervisor Password**.
  Secure Boot enables or disables Secure Boot. Secure Boot is a feature that helps prevent unauthorized firmware, operating systems, or UEFI drivers from running at boot time.
  Delete all Security Boot Keys deletes all secure boot variables.
  Restore Factory Defaults resets secure boot variables to manufacturing defaults.

- **Set SSD 0 User Password** sets the password for locking the SSD. After setting a password, the SSD can only be unlocked by the password no matter where it is installed.
- **Security Freeze Lock** enables or disables the “Security Freeze Lock” function. This function is only applicable to SATA drives in AHCI mode. It prevents attacks on the SATA drive by freezing the security state of the drive at POST and also when the system resumes from S3.
- **TPM Setup Menu**
  Change TPM Status allows you to select between *No Operation* and *Clear*.
- **Intel Trusted Execution Technology** enables utilization of additional hardware capabilities provided by Intel® Trusted Execution Technology.

Boot Menu

The Boot menu sets the sequence of the devices to be searched for the operating system.

- **Boot Type Order** determines the boot order. You can rearrange the order by dragging the boot device name up or down in the list.
- Each boot device can be individually set to *On* or *Off*. If you want to exclude a boot device from the boot order, set the device to *Off*.

Exit Menu

The Exit menu displays ways of exiting BIOS Setup Utility. After finishing with your settings, you must save and exit so that the changes can take effect.

- **Exit Saving Changes** saves the changes you have made and exits BIOS Setup Utility.
- **Exit Discarding Changes** exits BIOS Setup Utility without saving the changes you have made.
- **Load Setup Defaults** loads the factory default values for all the items.
- **Discard Changes** restores the previous values for all the items.
- **Saves Changes** saves the changes you have made.

Chapter 6

Using Getac Software

Getac software includes application programs for specific computer components and utility programs for overall management.

This chapter briefly introduces the programs.

OSD Control Panel

The OSD (On Screen Display) Control Panel provides a user-friendly interface for you to quickly activate or operate certain functions on your Tablet PC with a simple tap of the screen.

To open the OSD Control Panel, start the program named **OSDC**. The following screen appears.

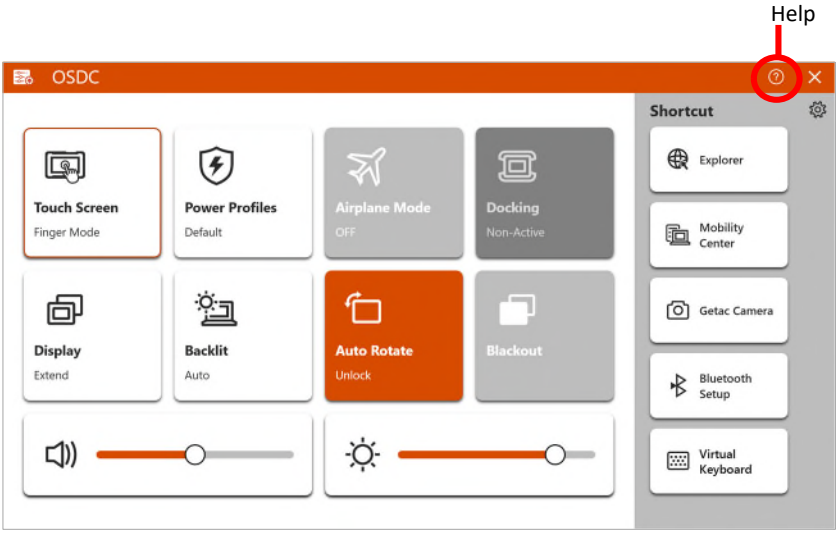

For detailed information on the program, see the program's online help.

G-Manager

G-Manager allows you to view, manage, and configure several system G-Manager allows you to view, manage, and configure several system functions and feature. At the left side of the G-Manager screen are the menu items. Select an item to open its menu.

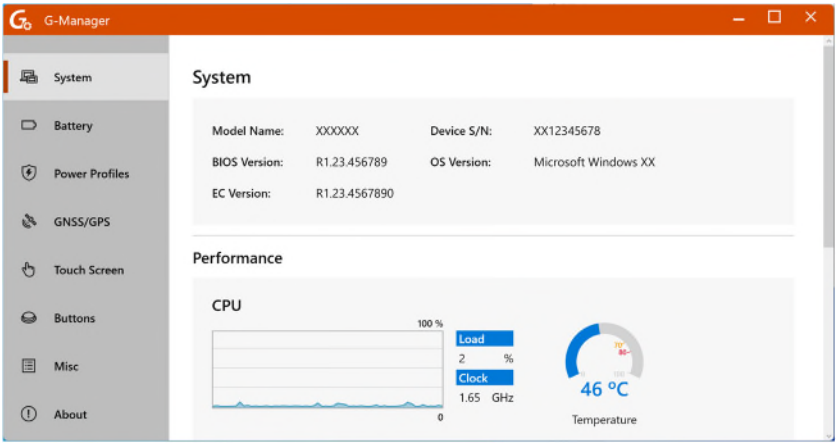

For detailed information, see the program's online help. Select **About → Help**.

NOTE: Not all items are supported by all models. Depending on your model, the actual items and information appearing on the screen can differ from those shown in this manual.

G-Camera (Optional)

G-Camera is a geo-tagging camera application. Geographical information can be embedded into JPEG files as EXIF 2.2 metadata.

NOTE: G-Camera uses the standard location service of Windows.

To start the G-Camera application, select → **G-Camera**.

In the middle is the preview window with status display. At the two sides are various buttons.

For detailed information on the program, see the program's online help. Tap → **Help**.

Chapter 7

Care and Maintenance

Taking good care of your Tablet PC will ensure a trouble-free operation and reduce the risk of damage to your Tablet PC.

This chapter gives you guidelines covering areas such as protecting, storing, cleaning, and traveling.

Protecting the Tablet PC

To safeguard the integrity of your Tablet PC data as well as the Tablet PC itself, you can protect the Tablet PC in several ways as described in this section.

Using an Anti-Virus Strategy

You can install a virus-detecting program to monitor potential viruses that could damage your files.

Using the Cable Lock

You can use a Kensington-type cable lock to protect your Tablet PC against theft. The cable lock is available in computer stores.

To use the lock, loop the lock cable around a stationary object such as a table. Insert the lock to the Kensington lock hole and turn the key to secure the lock. Store the key in a safe place.

Taking Care of the Tablet PC

Location Guidelines

- For optimal performance, use the Tablet PC where the recommended temperature is between 0 °C (32 °F) and 55 °C (131 °F). (Actual operating temperature depends on product specifications.)
- Avoid placing the Tablet PC in a location subject to high humidity, extreme temperatures, mechanical vibration, direct sunlight, or heavy dust. Using in extreme environments for long periods can result in product deterioration and a shortened product life.
- Operating in an environment with metallic dust is not allowed.
- Place the Tablet PC on a flat and steady surface. Do not stand the Tablet PC on its side or store it in an upside-down position. A strong impact by dropping or hitting may damage the Tablet PC.
- Do not cover or block any ventilation openings on the Tablet PC. For example, do not place the Tablet PC on a bed, sofa, rug, or other similar surface. Otherwise, overheating may occur that results in damage to the Tablet PC.
- As the Tablet PC can become very hot during operation, keep it away from objects that are vulnerable to heat.
- Keep the Tablet PC at least 13 cm (5 inches) away from electrical appliances that can generate a strong magnetic field such as a TV, refrigerator, motor, or a large audio speaker.
- Avoid moving the Tablet PC abruptly from a cold to a warm place. A temperature difference of more than 10 °C (18 °F) may cause condensation inside the unit, which may damage the storage media.

General Guidelines

- Do not place heavy objects on top of the Tablet PC as this may damage the display.
- To avoid damaging the screen, do not touch it with any sharp object.

- LCD image sticking occurs when a fixed pattern is displayed on the screen for a prolonged period of time. You can avoid the problem by limiting the amount of static content on the display. It is recommended that you use a screen saver or turn off the display when it is not in use.
- To maximize the life of the backlight in the display, allow the backlight to automatically turn off as a result of power management.

Cleaning Guidelines

- Never clean the Tablet PC with its power on.
- Use a soft cloth moistened with water or a non-alkaline detergent to wipe the exterior of the Tablet PC.
- Gently wipe the display with a soft, lint-free cloth.
- If water or liquid is split onto the Tablet PC, wipe it dry and clean when possible. Though your Tablet PC is water-proof, do not leave the Tablet PC wet when you can dry it.
- If the Tablet PC gets wet where the temperature is 0° C (32° F) or below, freeze damage may occur. Make sure to dry the wet Tablet PC.

Battery Pack Guidelines

- Recharge the battery pack when it is nearly discharged. When recharging, make sure that the battery pack is fully charged. Doing so may avoid harm to the battery pack.
- The battery pack is a consumable product and the following conditions will shorten its life:
  – when frequently charging the battery pack
  – when using, charging, or storing the battery in high temperature condition
- To avoid hastening the deterioration of the battery pack thereby prolonging its useful life, minimize the number of times you charge it so as not to frequently increase its internal temperature.
- Charge the battery pack between 10 °C ~ 30 °C (50 °F ~ 86 °F) temperature range. A higher environment temperature will cause the battery pack’s temperature to rise. Avoid charging the battery pack inside a closed vehicle

and in hot weather condition. Also, charging will not start if the battery pack is not within the allowed temperature range.

- It is recommended that you do not charge the battery pack more than once a day.
- It is recommended that you charge the battery pack with the Tablet PC's power off.
- To maintain the battery pack's operating efficiency, store it in a cool dark place removed from the Tablet PC and with 30 % ~ 40 % charge remaining.
- Important guidelines when using the battery pack.
  When installing or removing the battery pack take note of the following:
  – avoid installing or removing the battery pack when the Tablet PC is in Sleep mode. Abruptly removing the battery pack may cause loss of data or the Tablet PC may become unstable.
  – avoid touching the battery pack terminals or damage may occur, thereby causing improper operation to it or the Tablet PC.
  The Tablet PC's input voltage and surrounding temperature will directly affect the battery pack's charge and discharge time:
  – charging time will be prolonged when the Tablet PC is turned on. To shorten the charging time, it is recommended that you place the Tablet PC in Sleep or Hibernation mode.
  – a low temperature will prolong the charging time as well as hasten the discharge time.
- When using battery power in an extremely low temperature environment, you may experience shortened operating time and incorrect battery level reading. This phenomenon comes from the chemical characteristics of batteries. The appropriate operating temperature for the battery is -10 °C ~ 50 °C (14 °F ~ 122 °F).
- Do not leave the battery pack in storage for more than six months without recharging it.

Touchscreen Guidelines

- Use the finger or the included stylus on the display. Using a sharp or metallic object other than your finger or stylus may cause scratches and damage the display, thereby causing errors.
- Use a soft cloth to remove dirt on the display. The touchscreen surface has a special protective coating that prevents dirt from sticking to it. Not using a

soft cloth may cause damage to the special protective coating on the touchscreen surface.

- Turn off the Tablet PC power when cleaning the display. Cleaning the display with the power on may cause improper operation.
- Do not use excessive force on the display. Avoid placing objects on top of the display as this may cause the glass to break thereby damaging the display.
- In low and high temperatures (below 5 ºC / 41 °F and above 60 ºC / 140 °F), the touchscreen may have a slower response time or register the touch in the wrong location. It will go back to normal after returning to room temperature.
- When there is noticeable discrepancy in the operation of the touchscreen function (wrong location on intended operation or improper display resolution), refer to the Windows online Help for instructions on recalibrating the touchscreen display.

When Traveling

- Before traveling with your Tablet PC, make a backup of your hard disk data into flash disks or other storage devices. As an added precaution, bring along an extra copy of your important data.
- Make sure that the battery pack is fully charged.
- Make sure that the Tablet PC is turned off.
- Make sure that all the connector covers are closed completely to ensure the waterproof integrity.
- Disconnect the AC adapter from the Tablet PC and take it with you. Use the AC adapter as the power source and as a battery-charger.
- Hand-carry the Tablet PC. Do not check it in as luggage.
- If you need to leave the Tablet PC in the car, put it in the trunk of the car to avoid exposing the Tablet PC to excessive heat.
- When going through airport security, it is recommended that you send the Tablet PC and flash disks through the X-ray machine (the device you set your bags on). Avoid the magnetic detector (the device you walk through) or the magnetic wand (the handheld device used by security personnel).
- If you plan to travel abroad with your Tablet PC, consult your dealer for the appropriate AC power cord for use in your country of destination.

Chapter 8

Troubleshooting

Computer problems can be caused by hardware, software, or both. When you encounter any problem, it might be a typical problem that can easily be solved.

This chapter tells you what actions to take when solving common computer problems.

Preliminary Checklist

Here are helpful hints to follow before you take further actions when you encounter any problem:

- Try to isolate which part of the Tablet PC is causing the problem.
- Make sure that you turn on all peripheral devices before turning on the Tablet PC.
- If an external device has a problem, make sure that the cable connections are correct and secure.
- Make sure that the configuration information is properly set in the BIOS Setup program.
- Make sure that all the device drivers are correctly installed.
- Make notes of your observations. Are there any messages on the screen? Do any indicators light? Do you hear any beeps? Detailed descriptions are useful to the service personnel when you need to consult one for assistance.

If any problem persists after you follow the instructions in this chapter, contact an authorized dealer for help.

Solving Common Problems

Battery Problems

The battery does not charge (Battery Charge indicator does not light amber).

- Make sure that the AC adapter is properly connected.
- Make sure that the battery is not too hot or cold. Allow time for the battery pack to return to room temperature.
- If the battery doesn't charge after it has been stored in very low temperatures, try disconnecting and reconnecting the AC adapter to solve the problem.
- Make sure that the battery pack is installed correctly.
- Make sure that the battery terminals are clean.

The operating time of a fully charged battery becomes shorter.

- If you often partially recharge and discharge, the battery might not be charged to its full potential. Initialize the battery to solve the problem.

The battery operating time indicated by the battery meter does not match the actual operating time.

- The actual operating time can be different from the estimated time, depending on how you are using the Tablet PC. If the actual operating time is much less than the estimated time, initialize the battery.

Bluetooth Wireless Transmission Problems

I cannot connect to another device with Bluetooth wireless technology.

- Make sure that both devices have activated Bluetooth feature.
- Make sure that the distance between the two devices is within the limit and that there are no walls or other obstructions between the devices.
- Make sure that the other device is not in "Hidden" mode.
- Make sure that both devices are compatible.

Display Problems

Nothing appears on the screen.

- During operation, the screen may automatically turn off as a result of power management. Press any key to see if the screen comes back.
- The brightness level might be too low. Increase the brightness.

The characters on the screen are dim.

- Adjust the brightness and/or contrast.

The display brightness cannot be increased.

- As a protection, the display brightness will be fixed at a low level when the surrounding temperature is too high or too low. It is not a malfunction in this situation.

Bad dots appear on the display at all times.

- A small number of missing, discolored, or bright dots on the screen are an intrinsic characteristic of TFT LCD technology. It is not regarded as a LCD defect.

Clouding (or called “mura”) happens on the screen when you exert forces on the left or right side of the LCD frame.

- This is a normal phenomenon, not a defect.

The display has a slower response time in low temperature environments.

- The response time of LCDs can be affected by low temperatures. This does not mean the LCD is defective. The LCD will resume normal response time after returning to room temperature.

Hardware Device Problems

The Tablet PC does not recognize a newly installed device.

- The device may not be correctly configured in the BIOS Setup program. Run the BIOS Setup program to identify the new type.
- Make sure if any device driver needs to be installed. (Refer to the documentation that came with the device.)

- Check the cables or power cords for correct connections.
- For an external device that has its own power switch, make sure that the power is turned on.

Power Management Problems

The Tablet PC does not enter Sleep or Hibernation mode automatically.

- If you have a connection to another computer, the Tablet PC does not enter Sleep or Hibernation mode if the connection is actively in use.
- Make sure that the Sleep or Hibernation time-out is enabled.

The Tablet PC does not enter Sleep or Hibernation mode immediately.

- If the Tablet PC is performing an operation, it normally waits for the operation to finish.

The Tablet PC does not resume from Sleep or Hibernation mode.

- The Tablet PC automatically enters Sleep or Hibernation mode when the battery pack is empty. Do any one of the following:
  - Connect the AC adapter to the Tablet PC.
  - Replace the empty battery pack with a fully charged one.

Software Problems

An application program does not work correctly.

- Make sure that the software is correctly installed.
- If an error message appears on the screen, consult the software program's documentation for further information.
- If you are sure the operation has stopped, reset the Tablet PC.

Sound Problems

No sound is produced.

- Make sure that the volume control is not set too low. Increase the volume.
- Make sure that the sound is not muted.

- Make sure that the Tablet PC is not in Sleep mode.
- If using an external speaker, make sure that the speaker is properly connected.

Distorted sound is produced.

- Make sure that the volume control is not set too high or too low. In most cases, a high setting can cause the audio electronics to distort the sound.

Startup Problems

When you turn on the Tablet PC, it does not respond and the Power Indicator does not light up.

- If you are using an external AC power, make sure that the AC adapter is correctly and securely connected. If so, make sure that the electrical outlet works properly.
- If you are using the battery power, make sure that the battery is not discharged.
- When the ambient temperature is below -20 °C (-4 °F), the Tablet PC will start up only if both battery packs are installed.

When you turn on the Tablet PC, it stops after POST.

- Reset your Tablet PC.

WLAN Problems

I cannot use the WLAN feature.

- Make sure that the WLAN feature is turned on.

Transmission quality is poor.

- Your Tablet PC may be in an out-of-range situation. Move your Tablet PC closer to the Access Point or another WLAN device it is associated with.
- Check if there is high interference around the environment and solve the problem as described next.

Radio interference exists.

- Move your Tablet PC away from the device causing the radio interference such as microwave oven and large metal objects.
- Plug your Tablet PC into an outlet on a different branch circuit from that used by the affecting device.
- Consult your dealer or an experienced radio technician for help.

I cannot connect to another WLAN device.

- Make sure that the WLAN feature is turned on.
- Make sure that the SSID setting is the same for every WLAN device in the network.
- Your Tablet PC is not recognizing changes. Restart the Tablet PC.
- Make sure that the IP address or subnet mask setting is correct.

I cannot communicate with the computer in the network when Infrastructure mode is configured.

- Make sure that the Access Point your Tablet PC is associated with is powered on and all the LEDs are working properly.
- If the operating radio channel is in poor quality, change the Access Point and all the wireless station(s) within the BSSID to another radio channel.
- Your Tablet PC may be in an out-of-range situation. Move your Tablet PC closer to the Access Point it is associated with.
- Make sure that your Tablet PC is configured with the same security option (encryption) to the Access Point.
- Use the Web Manager/Telnet of the Access Point to check whether it is connected to the network.
- Reconfigure and reset the Access Point.

I cannot access the network.

- Make sure that the network configuration is appropriate.
- Make sure that the user name or password is correct.
- You have moved out of range of the network.

- Turn off power management.

Other Problems

The date/time is incorrect.

- Correct the date and time via the operating system or BIOS Setup program.
- After you have performed everything as described above and still have the incorrect date and time every time you turn on the Tablet PC, the RTC (Real-Time Clock) battery is at the end of its life. Call an authorized dealer to replace the RTC battery.

GPS signals drop when they are not supposed to.

- If your computer is connected to the docking station which has one or more USB 3.2/USB 3.1/3.0 devices connected, the USB device can interfere with the radio frequency, causing poor GPS signal reception. To solve the problem in this situation, run the BIOS Setup Utility, go to **Advanced** → **Device Configuration** → **Docking USB Port Setting** and change the setting to USB 2.0.

Resetting the Tablet PC

You may have to reset (reboot) your Tablet PC on some occasions when an error occurs and the program you are using hangs up.

If you are sure the operation has stopped and you cannot use the “restart” function of the operating system, reset the Tablet PC.

Reset the Tablet PC by any one of these methods:

- Press and hold the **P1** button for more than 2 seconds. This opens the **Ctrl-Alt-Del** screen where you can select actions including **Restart**.
- If the above action does not work, press and hold the power button for more than 5 seconds to force the system to turn off. Then turn on the power again.

System Recovery

Using Windows RE

Windows has a recovery environment (Windows RE) that provides recovery, repair, and troubleshooting tools. The tools are referred to as Advanced Startup Options. You can access these options by selecting **Start** → **Settings** → **System** → **Recovery**. There are several choices:

- **System Restore**
  This option allows you to restore Windows to an earlier point in time if you have created a restore point.
- **Recover from a drive**
  If you have created a recovery drive on Windows, you can use the recovery drive to reinstall Windows.
- **Reset this PC**
  This option allows you to reinstall Windows with or without keeping your files.

See Microsoft website for more information.

NOTE:

- If you are in a situation where your computer won't boot into Windows, you can access the Advanced Startup Options by running the BIOS Setup Utility and selecting **Advanced** → **Windows RE**.
- System recovery for Windows typically will take several hours to complete.

Using Recovery Partition

When necessary, you can restore your Windows system to the factory default state by using the “recovery partition” feature. Recovery partition is a portion of your hard disk drive that is set aside by the manufacturer to hold the original image of your system.

WARNING:

- Using this feature will reinstall Windows to your system and configure it to the system’s factory default settings. All data on the hard disk drive will be lost.
- Make sure that power is not interrupted during the recovery process. An unsuccessful recovery may result in Windows startup problems.

To restore your system to the factory default state:

1. Connect the AC adapter.
2. Run BIOS Setup Utility. Select **Advanced** → **Recovery Partition**. (See Chapter 5 for more information.)
3. Follow the onscreen instructions to complete the process.

Using the Driver Disc (Optional)

NOTE: You can download the latest drivers and utilities from Getac website at **http://www.getac.com** → **Support**.

The Driver disc contains drivers and utilities required for specific hardware in your Tablet PC.

Since your Tablet PC comes with drivers and utilities pre-installed, you normally do not need to use the Driver disc. In case you want to manually install Windows, you will have to install the drivers and utilities one by one after installing Windows.

To manually install drivers and utilities:

1. Start up the Tablet PC.
2. Prepare an external CD/DVD drive (with USB connection). Connect the drive to your Tablet PC. Wait for the Tablet PC to recognize the drive.
3. Insert the Driver disc. Make sure you use the disc that matches the Windows version of your Tablet PC.
4. The autorun program should automatically start. You will see the installation menu. Tap **NEXT** to go to the next page if there is more than one.
5. To install a driver or utility, just tap the particular button and follow the onscreen instructions to complete the installation.

Appendix A

Specifications

NOTE: Specifications are subject to change without any prior notice.

Parts		Specifications
CPU		Alder Lake U Platform Intel® Core™ i5-1235U, 4.4 GHz (Max.), 12M cache
BIOS		Insyde, Flash EEPROM, UEFI, supporting TPM, vPro, NIST, Absolute DDS, HDD Security Erasure, BIOS self-diagnostic, Device Guard & Credential Guard, MAC Pass through, ACPI, AMT12, and WMI
RAM		8/16GB DDR4 SO-DIMM, 2400MHz
Video	Controller	Intel® Iris® Xe
	Display Panel	11.6-inch (16:9) TFT LCD, FHD 1920x1080, sunlight readable, 800 Nits maximum brightness, anti-glare
Touchscreen		Capacitive, multi-touch,10 points
Audio	Features	High Definition audio
	Speaker	1.5 W x 1
	Microphone	Integrated microphone
Hard disk drive		256GB/512GB/1TB/2TB SSD (Solid-State Drive)
I/O ports		USB 3.2 Gen 2, combo audio (4-pole TRRS 3.5mm type), USB 3.2 Gen 2 Type-C, Docking
Wireless LAN + Bluetooth		Intel® Wireless-AC 9260, 802.11 AC + Bluetooth 5.0 combo (vPro)
Camera (option)		Front: FHD, 5M pixel, autofocus Rear: 8M pixel, autofocus, LED, video capture
Security		Kensington lock TPM 2.0
Powe	AC adapter	Universal 90 W; input: 100-240 VAC, 50/60 Hz; output: 19 V
	Battery pack x 2	Lithium-ion Prismatic type, 3-cell

Parts	Specifications
Dimension (LxW×D)	314 x 207 x 24.5 mm (12.36 × 8.15 × 0.96 inches)
Weight	1.39 kg (3 lb)

Button Functions on Special Occasions

On “POST/BIOS Setup/Non-ACPI” occasions, the five hardware buttons provide keyboard key functions as described below.

Button	Function
	Enter
	Esc
	Tab
	↑ Up
	↓ Down

Appendix B

Regulatory Information

This appendix provides regulatory statements and safety notices on your Tablet PC.

NOTE: Marking labels located on the exterior of your Tablet PC indicate the regulations that your model complies with. Please check the marking labels and refer to the corresponding statements in this appendix. Some notices apply to specific models only.

Safety Notices

About the Battery

If the battery is mishandled, it may cause fire, smoke or an explosion and the battery's functionality will be seriously damaged. The safety instructions listed below must be followed.

Danger

- Do not immerse the battery with liquid such as water, sea water or soda.
- Do not charge/discharge or place the battery in high-temperature (more than 80 °C / 176 °F) locations, such as near a fire, heater, in a car in direct sunlight, etc.
- Do not use unauthorized chargers.
- Do not force a reverse-charge or a reverse-connection.
- Do not connect the battery with AC plug (outlet) or car plugs.
- Do not adapt the battery to unspecified applications.
- Do not short circuit the battery.
- Do not drop or subject the battery to impacts.
- Do not penetrate with a nail or strike with a hammer.
- Do not directly solder the battery.
- Do not disassemble the battery.
- Keep the battery away from an extremely low air pressure environment as it may result in an explosion or the leakage of flammable liquid or gas.

Warning

- Keep the battery away from infants.
- Stop using the battery if there are noticeable abnormalities such as abnormal smell, heat, deformities, or discoloration.
- Stop charging if the charging process cannot be finished.

- In case of a leaking battery, keep the battery away from flames and do not touch it.
- Pack the battery tightly during transport.

Caution

- Do not use the battery where static electricity (more than 100V) exists that might damage the protection circuit of the battery.
- When children are using the system, parents or adults must ensure that they are using the system and battery correctly.
- Keep the battery away from flammable materials during charging and discharging.
- In case lead wires or metal objects come out from the battery, you must seal and insulate them completely.

Caution Texts Concerning Lithium Batteries

DANISH

ADVARSEL! Lithiumbatteri – Eksplosionsfare ved fejlagtig håndtering. Udskiftning må kun ske med batteri af samme fabrikat og type. Levér det brugte batteri tilbage til leverandøren.

NORWEGIAN

ADVARSEL: Eksplosjonsfare ved feilaktig skifte av batteri. Benytt samme batteritype eller en tilsvarende type anbefalt av apparatfabrikanten. Brukte batterier kasseres i henhold til fabrikantens instruksjoner.

SWEDISH

VARNING: Explosionsfara vid felaktigt batteribyte. Använd samma batterityp eller en ekvivalent typ som rekommenderas av apparattillverkaren. Kassera använt batteri enligt fabrikantens instruktion.

FINNISH

VAROITUS: Paristo voi räjähtää, jos se on virheellisesti asennettu. Vaihda paristo ainoastaan valmistajan suosittelemaan tyyppiin. Hävitä käytetty paristo valmistajan ohjeiden mukaisesti.

ENGLISH

CAUTION: Danger of explosion if battery is incorrectly replaced. Replace only with the same or equivalent type recommended by the equipment manufacturer. Discard used batteries according to manufacturer‘s instructions.

DEUTSCH

VORSICHT: Explosionsgefahr bei unsachgemäßem Austausch der Batterie. Ersatz nur durch denselben oder einen vom Hersteller empfohlenen gleich-wertigen Typ. Entsorgung gebrauchter Batterien nach Angaben des Herstellers.

FRENCH

ATTENTION: II y a danger d'explosion s'il y a remplacement incorrect de la batterie. Remplacer uniquement avec une batterie du même type ou d'un type équivalent recommandé par le constructeur. Mettre au rebut les batteries usagées conformément aux instructions du fabricant.

Attention (for USA Users)

The product that you have purchased contains a rechargeable battery. The battery is recyclable. At the end of its useful life, under various state and local laws, it may be illegal to dispose of this battery into the municipal waste stream. Check with your local solid waste officials for details in your area for recycling options or proper disposal.

About the AC Adapter

- Use only the AC adapter supplied with your computer. Use of another type of AC adapter will result in malfunction and/or danger.
- If a ground/earth pin attachment plug on the AC power cord is provided, always plug the cord into a grounded/earthed outlet. Do not disable ground/earth pin of the plug/cord.
- Do not use the adapter in a high moisture environment. Never touch the adapter when your hands or feet are wet.
- Allow adequate ventilation around the adapter when using it to operate the device or charge the battery. Do not cover the AC adapter with paper or other objects that will reduce cooling. Do not use the AC adapter while it is inside a carrying case.
- Connect the adapter to a proper power source. The voltage requirements are found on the product case and/or packaging.
- Do not use the adapter if the cord becomes damaged.
- Do not attempt to service the unit. There are no serviceable parts inside. Replace the unit if it is damaged or exposed to excess moisture.

Heat Related Concerns

Your device may become very warm during normal use. It complies with the user-accessible surface temperature limits defined by the International Standards for Safety. Still, sustained contact with warm surfaces for long periods of time may cause discomfort or injury. To reduce potential heat-related concerns, follow these guidelines:

- Keep your device and its AC adapter in a well-ventilated area when in use or charging. Allow for adequate air circulation under and around the device.
- Use common sense to avoid situations where your skin is in contact with your device or its AC adapter when it's operating or connected to a power source. For example, don't sleep with your device or its AC adapter, or place it under a blanket or pillow, and avoid contact between your body and your device when the AC adapter is connected to a power source. Take special care if you have a physical condition that affects your ability to detect heat against the body.
- If your device is used for long periods, its surface can become very warm. While the temperature may not feel hot to the touch, if you maintain physical contact with the device for a long time, for example if you rest the device on your lap, your skin might suffer a low-heat injury.
- If your device is on your lap and gets uncomfortably warm, remove it from your lap and place it on a stable work surface.
- Never place your device or AC adapter on furniture or any other surface that might be marred by exposure to heat since the base of your device and the surface of the AC adaptor may increase in temperature during normal use.

North America

USA

Federal Communications Commission Radio Frequency Interference Statement

NOTE:

This equipment has been tested and found to comply with the limits for a Class B digital device pursuant to Part 15 of the FCC Rules. These limits are designed to provide reasonable protection against harmful interference in a residential installation. This equipment generates, uses, and can radiate radio frequency energy and, if not installed and used in accordance with the instructions, may cause harmful interference to radio communications. However, there is no guarantee that interference will not occur in a particular installation. If this equipment does cause harmful interference to radio or television reception, which can be determined by turning the equipment off and on, the user is encouraged to try to correct the interference by one or more of the following measures:

- Reorient or relocate the receiving antenna.
- Increase the separation between the equipment and receiver.
- Connect the equipment into an outlet on a circuit different from that to which the receiver is connected.
- Consult the dealer or an experienced radio/TV technician for help.

Any changes or modifications not expressly approved by the manufacturer could void the user’s authority to operate the equipment.

Please note:

The use of a non-shielded interface cable with this equipment is prohibited.

This device complies with Part 15 of the FCC Rules. Operation is subject to the following two conditions:

(1) This device may not cause harmful interference.

(2) This device must accept any interference received, including interference that may cause undesired operation.

These requirements set a SAR limit of 1.6 W/kg averaged over one gram of tissue. The highest SAR value reported under this standard during product certification is 1g SAR 1.187 W/kg

Company name	Getac Inc.
Address	15495 Sand Canyon Rd., Suite 350 Irvine, CA 92618 USA
Phone	+1-949-681-2900

ANSI Warning

Equipment approved for ANSI/ISA 12.12.01, Nonincendive Electrical Equipment for use in Class I, Division 2, Group A, B, C, and D.
Maximum ambient temperature: 40°C

EXPLOSION HARZARD WARNINGS:

- External connections/hubs through the connectors as mentioned (USB connector, Ethernet connector, video port, serial port, power supply connector, microphone jack, headphones jack, and buttons/switches) are not to be used in a hazardous location.
- Tablet is to be only powered from the battery pack while in Hazardous Locations. Power adapter is not certified to use in Hazardous Locations and not to be used in Hazardous Locations.
- BATTERY MUST ONLY BE CHANGED IN AN AREA KNOWN TO BE NON-HAZARDOUS.

California Proposition 65

For California USA:

Proposition 65, a California law, requires warnings to be provided to California consumers when they might be exposed to chemical(s) identified by Proposition 65 as causing cancer and birth defects or other reproductive harm.

Almost all electronic products contain 1 or more of the chemicals listed under Proposition 65. This does not mean the products pose a significant risk of exposure. As the consumers have the right to know about the products they purchase, we are giving this warning on our packaging and user manual to keep our consumers well informed.

WARNING

This product can expose you to chemicals including lead, TBBPA or formaldehyde, which are known to the State of California to cause cancer and birth defects or other reproductive harm. For more information go to www.P65Warnings.ca.gov

Canada

Canadian ICES-003

CAN ICES-3(B)/NMB-3(B)

This device contains licence-exempt transmitter(s)/receiver(s) that comply with Innovation, Science and Economic Development Canada's licence-exempt RSS(s). Operation is subject to the following two conditions: (1) This device may not cause interference. (2) This device must accept any interference, including interference that may cause undesired operation of the device.

L'émetteur/récepteur exempt de licence contenu dans le présent appareil est conforme aux CNR d'Innovation, Sciences et Développement économique Canada applicables aux appareils radio exempts de licence. L'exploitation est autorisée aux deux conditions suivantes : 1) L'appareil ne doit pas produire de brouillage; 2) L'appareil doit accepter tout brouillage radioélectrique subi, même si le brouillage est susceptible d'en compromettre le fonctionnement.

The device could automatically discontinue transmission in case of absence of information to transmit, or operational failure. Note that this is not intended to prohibit transmission of control or signaling information or the use of repetitive codes where required by the technology.

L'appareil peut interrompre automatiquement la transmission en cas d'absence d'informations à transmettre ou de panne opérationnelle. Notez que ceci n'est pas destiné à interdire la transmission d'informations de contrôle ou de signalisation ou l'utilisation de codes répétitifs lorsque cela est requis par la technologie.

The device for operation in the band 5150–5250 MHz is only for indoor use to reduce the potential for harmful interference to co-channel mobile satellite systems.

l'appareil fonctionnant dans la bande 5150-5250 MHz est réservé à une utilisation en intérieur afin de réduire les risques de brouillage préjudiciable pour les systèmes mobiles par satellite dans le même canal.

These requirements set a SAR limit of 1.6 W/kg averaged over one gram of tissue. The highest SAR value reported under this standard during product certification is 1g SAR 1.187 W/kg

Ces exigences fixent une limite DAS de 1.6 W/kg en moyenne sur un gramme de tissu. La valeur SAR la plus élevée signalée dans le cadre de cette norme lors de la certification du produit est de 1g SAR 1.187 W/kg

User Notification of Take-back Service

To customers in United States and Canada:

Getac believes in providing our customers with easy-to-use solutions to recycle your Getac-brand products for free. Getac understands the customers will likely be recycling multiple items at once and as such. Getac wants to make the recycling process for these larger shipments as streamlined as possible. Getac works with recycling vendors with the highest standards for protecting our environment, ensuring worker safety, and complying with global environmental laws. Our commitment to recycling our old equipment grows out of our work to protect the environment in many ways. For more information, see the Getac Web site at https://www.getac.com/us/environmental-certifications/.

Please see the product type below for information on Getac product, battery and packaging recycling in USA and Canada.

- **For Product Recycling:**
  If you have a Getac computer that needs to go to a recycling house, Getac can help you. Just contact us at (866) 394 – 3822 or by email at **GUSA.RecycleProgram@getac.com** to obtain a prepaid shipping label at no charge to you, pack up your equipment in a box of your choice and send it off.
- **For Battery Recycling:**
  The batteries used to power your portable Getac products contain hazardous materials. While they pose no risk to you during normal use, they should never be disposed with other wastes. Getac provides a free take-back service for recycling your batteries from Getac products. To recycle the battery, please contact us at (866) 394 – 3822 or by email at **GUSA.RecycleProgram@getac.com**.
- **For Packaging Recycling:**
  Getac has chosen the packaging materials used to transport our products carefully, to balance the requirements of shipping the product to you safely

while minimizing the amount of material used. Our packaging for notebooks and tablets is recyclable and manufactured using elemental chlorine-free processes. They contain 90 percent (by weight) recycled content. Your packaging materials can be recycled at your local recycling center. Or, if you would like Getac to recycle your packaging, please contact us at (866) 394 – 3822 and we will make arrangements for you.

If you have the above for recycling, please visit our website https://www.getac.com/us/environmental-certifications/

Europe Marking and Compliance Notices

Statements of Compliance

English
Getac hereby declares that this product complies with the EU Directive 2014/53/EU. The full text of the EU declaration of conformity is available at:
https://support.getac.com/Portal/Page/809

Deutsch
Getac erklärt hiermit, dass Gerät mit den grundlegenden Anforderungen und anderen relevanten Bestimmungen der Richtlinie 2014/53/EU übereinstimmt. Der gesamte Text der EU Konformitätserklärung ist verfügbar unter:
https://support.getac.com/Portal/Page/846

Español
Por la presente, Getac declara que el producto cumple con la Directiva de la UE 2014/53/UE. El texto completo de la declaración UE de conformidad se encuentra a continuación.
https://support.getac.com/Portal/Page/866

Français
Getac déclare par la présente que cet appareil est conforme aux critères essentiels et autres clauses pertinentes de la directive 2014/53/EU. La déclaration de conformité de l'UE peut être téléchargée à partir du site internet suivant :
https://support.getac.com/Portal/Page/879

Italiano
Getac con la presente dichiara che questo dispositivo è conforme ai requisiti essenziali e alle altre disposizioni pertinenti con la direttiva 2014/53/EU. Il testo completo della dichiarazione di conformità UE è disponibile all'indirizzo:
https://support.getac.com/Portal/Page/892

Notices

Max power:
WLAN 2.4G: 16.9 dBm
WLAN 5G: 17.7 dBm
Bluetooth: 10 dBm

The device is restricted to indoor use only when operating in the 5150 to 5350 MHz frequency range.

	BE	BG	CZ	DK	DE	EE
	IE	EL	ES	FR	HR	IT
	CY	LV	LT	LU	HU	MT
	NL	AT	PL	PT	RO	SI
	SK	FI	SE	NO	IS	LI
	CH	TR	UK (NI)			

Restriction or Requirement in the UK: 5150 to 5350 MHz indoor-use only.

	UK

	Waste Electrical and Electronic Equipment (WEEE) This symbol means that according to local laws and regulations your product shall be disposed of separately from household waste. When this product reaches its end of life, take it to a collection point designated by local authorities. Proper recycling of your product will protect human health and the environment.

	Battery Directive — Information for Users In the European Union, this label indicates that the batteries in this product should be collected separately and not be disposed of with household waste. Substances in batteries can have a potential impact on health and environment and you have a role in recycling waste batteries thus contributing to the protection, preservation, and improvement of the quality of the environment.

Restriction of Hazardous Substances (RoHS) Directive

EU RoHS

Getac products meet the requirements of Directive 2011/65/EU on the restriction of the use of certain hazardous substances in electrical and electronic

equipment. For more information about RoHS, go to:
https://www.getac.com/us/environment/

Company name	Getac Technology GmbH.
Address	Kanzlerstrasse 4 40472 Dusseldorf, Germany
Phone	+49 (0) 211-984819-0

Company name	Getac UK Ltd.
Address	Getac House, Stafford Park 12, Telford, Shropshire, TF3 3BJ, UK
Phone	+44 (0) 1952-207-222

ENERGY STAR

ENERGY STAR® is a government program that offers businesses and consumers energy-efficient solutions, making it easy to save money while protecting the environment for future generations.

Please reference ENERGY STAR® related information from http://www.energystar.gov.

As an ENERGY STAR® Partner, Getac Technology Corporation has determined that this product meets the ENERGY STAR® guidelines for energy efficiency.

All Getac products with ENERGY STAR® logo comply with the ENERGY STAR® standard, and the power management feature is enabled by default. Getac's ENERGY STAR® qualified products are listed on the EPA website. https://www.energystar.gov/products

About Battery and External Enclosure Replacement

Battery

The batteries of your product include two battery packs and a button cell (or called RTC battery). All batteries are available from Getac authorized service centers.

The battery pack is user-replaceable. Replacement instructions can be found in “Replacing the Battery Pack” in Chapter 3.

The button cell must be replaced by Getac authorized service centers.

Visit the website at http://us.getac.com/support/support-select.html for authorized service center information.

External Enclosure

The external enclosure of the product can be removed using screwdrivers. The external enclosure can then be reused or refurbished.

The enclosure consists of the back cover and the LCD frame. See below for information on how to remove the two parts.
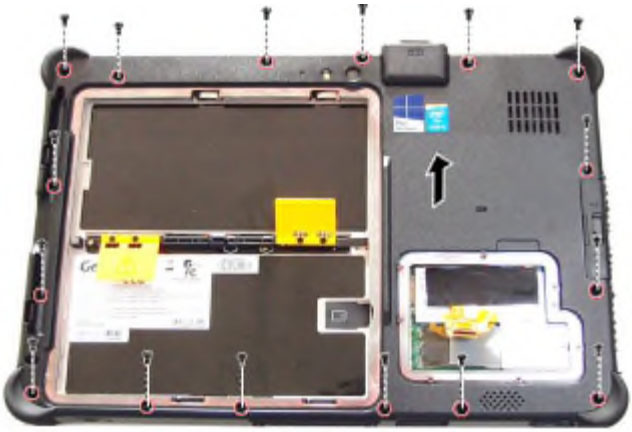
Remove the screws as indicated below. Open the back cover and LCD frame.