Getac

ZX10

USER MANUAL

Rugged Mobile Computing Solutions

July 2021

Trademarks

Comes with the Google™ app and Google Chrome™
Google, Android and Gboard are trademarks of Google LLC.
The Bluetooth word mark and logos are owned by the Bluetooth SIG, Inc.
All other brand and product names are trademarks or registered trademarks of their respective companies.

Disclaimer

Specifications and manuals are subject to change without notice. Getac assumes no liability for damage incurred directly or indirectly from errors, omissions, or discrepancies between the device and the manuals.

Notes

Depending on the specific model you purchased, the color and look of your model may not exactly match the graphics shown in this document.
The screenshots and other presentations shown in this document are for reference only. They may differ from the actual screens and presentations generated by the actual product.
Your device is based on Android™ 11 operating system, with additions by Getac.
For the latest version of the manual, please visit the Getac website at www.getac.com.

Table of Contents

Chapter 1 Getting Started 1
Identifying Hardware Components 1
Front Components 1
Back Components 4
Right-Side Components 5
Left-Side Components 5
Top Components 6
Bottom Components 6
Getting Your Device Ready for Use 7
Installing the Micro-SIM Card (Optional) and Battery Packs 7
Using the Tether 9
Connecting to AC Power and Charging the Battery 10
Performing the Initial Startup 11

Chapter 2 Operating Basics 12
Waking Up and Shutting Down 12
Waking Up 12
Shutting Down 12
Navigating on the Screen 13

Chapter 3 Getting Connected 14
Wireless Connections 14
Using WWAN (Select Models Only) 14
Using Wi-Fi Networks 14
Using the Bluetooth Function 15
External Connections 16
Connections via USB Type-C 16
Connections via USB Type-A 17
Using a MicroSD Card 17
Connecting an Audio Device 18
Using a Smart Card (Select Models Only) 18

Chapter 4 Managing Your Device 20
Managing Power 20
Low Battery Signals and Actions 20
Replacing the Battery Pack 21
Power-Saving Tips 23
Battery Guidelines 23
Customizing Your Device 24
Settings 24
Getac Settings 24

Chapter 5 Care and Maintenance 25
Restart or Hard Reboot 25
Restart 25
Hard Reboot 25
Caring for Your Device 26

Chapter 6 Regulatory Information 27
Regulations Statements 27
USA Class B Regulations 27
Industry Canada Statement 29
Europe Marking and Compliance Notices 32
Safety Precautions 34
About Charging 34
About the AC Adapter 34
About the Battery 35
Heat Related Concerns 36
User Notification of Take-back Service 37
ENERGY STAR 38
California Proposition 65 40

Chapter 1

Getting Started

This chapter introduces you to the external components of your device and guides you through the process of setting up your device for use.

NOTE: Depending on the specific model you purchased, the color and look of your model may not exactly match the graphics shown in this document.

Identifying Hardware Components

Front Components

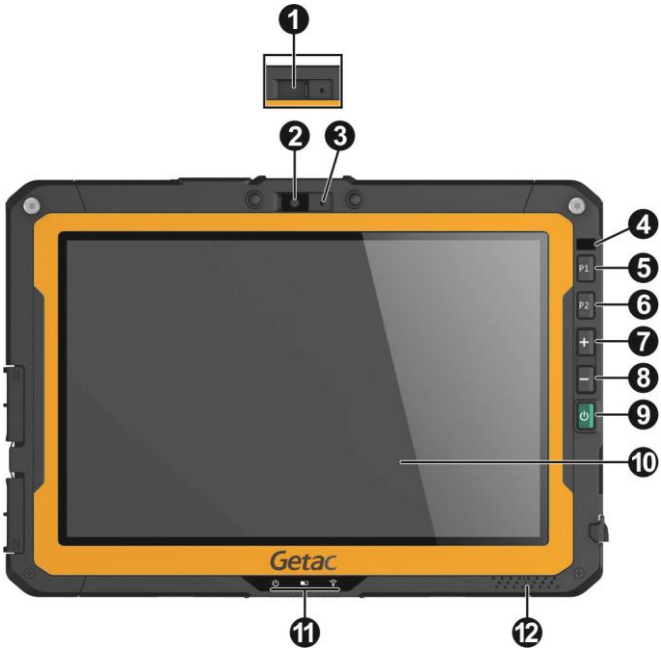

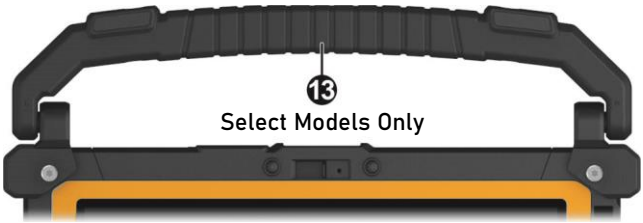

Ref	Component	Description	
❶	**Camera cover** (optional)	Covers the camera lens. Slide the cover to open or close it. The cover provides privacy protection.	
❷	**Camera lens** (optional)	Allows you to use the camera function. The front lens supports 8 MP with fixed focus.	
❸	**Microphone**	Receives sound and voice.	
❹	**Light sensor**	Senses the ambient light for automatic adjustments of the display backlight.	
❺	**P1 button**	Increases the LCD brightness (default setting).	
❻	**P2 button**	Decreases the LCD brightness (default setting).	
❼	**Plus button**	Increases the sound volume (default setting). The type of sound adjusted depends on the current operation.	
❽	**Minus button**	Decreases the sound volume (default setting). The type of sound adjusted depends on the current operation.	
❾	**Power button**	**Short press**	Goes into or wakes up from sleep mode.
		Long press	Starts up the device from the power off state.
			Opens a menu with **Power off** option when the device power is on.
			A press longer than 8 seconds brings different results. (See “Restart or Hard Reboot” in Chapter 6 for information.)
Ref	**Component**	**Description**	
❿	**Touchscreen**	Displays and receives information for the device.	

⓫	**Indicators**	
	⏻ Power	Lights blue when the device is turned on.
		Blinks blue when the device is in Suspend mode. Suspend mode is a deep sleep mode that saves more battery power. The device automatically enters Suspend mode after remaining idle in Sleep mode for some time. The device will wake up upon an external event (such as a button press or an alarm).
	Airplane mode	Lights blue when the RF (Radio Frequency) radio of any RF feature (WLAN/Bluetooth/WWAN) is on. If Airplane mode is switched on, the light turns off.
	Battery Charge	Lights amber when the battery is being charged.
		Lights green when battery charging is completed.
		Blinks red (once per second) when the battery's capacity is below 10%.
		Blinks red rapidly (once per 0.5 second) when there is a thermal protection problem. Ask for repair service in case this happens.
		Blinks amber when the battery charging is in an abnormal state. Replace the battery in case this happens.
⓬	**Speaker**	Plays music, sounds and voices.
⓭	**Handle** (optional)	Provides a convenient way to carry the device. **NOTE:** When carrying the device around, always use the handle.
		When placing the device on a table top for work, rotate the handle backwards to serve as a stand.

NOTE: The hardware buttons (except the power button) can be re-defined using **Getac Settings**.

Back Components

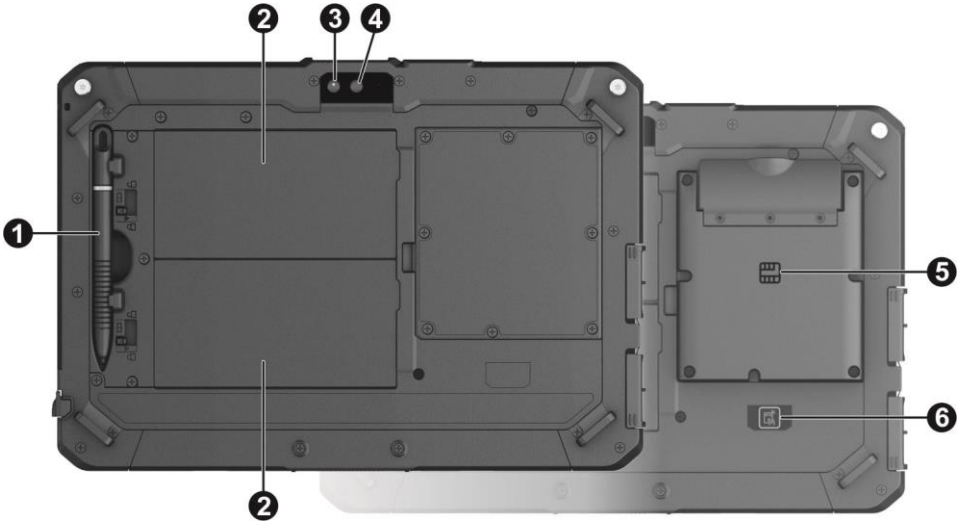

Ref	Component	Description
❶	**Stylus**	Serves as the input device by tapping on the touchscreen to make selections and enter information.
❷	**Battery pack**	Supplies power to your device when external power is not connected. **NOTE:** If you have the high-capacity battery model, the battery pack looks different from the one shown here.
❸	**Flash** (optional)	Provides extra light in certain applications.
❹	**Camera lens** (optional)	Allows you to use the camera function. The rear lens supports 16 MP with auto focus.
❺	**Smart card reader** (optional)	Accepts a smart card for additional security feature.
❻	**RFID antenna** (optional)	Reads data from NFC/RFID tags.

Right-Side Components

Ref	Component	Description
1	**Power connector**	Connects to the AC adapter.

Left-Side Components

For covers with an arrowhead icon, push the cover toward one side to unlock and the other side to lock. The arrowhead points to the side for unlocking.

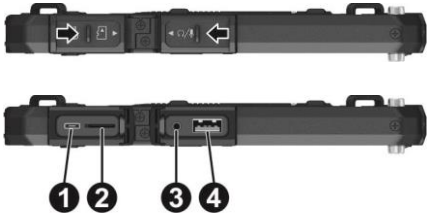

Ref	Component	Description
1	**USB 3.2 Gen 1 Type-C connector**	Connects a USB device that supports USB Type-C connection.
2	**MicroSD card slot**	Accepts a microSD card for removable storage.
3	**Combo audio connector**	Connects a set of headphones or external speakers with amplifier.
		Supports a headset microphone with 4-pole TRRS 3.5mm jack.
4	**USB 2.0 connector**	Connects a USB peripheral device.

Top Components

Ref	Component	Description
❶	**Barcode scanner lens** (optional)	Scans barcodes.

Bottom Components

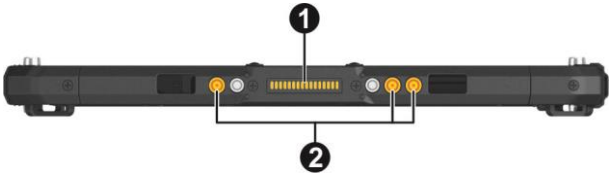

Ref	Component	Description
❶	**Docking connector**	Connects to the office or vehicle dock (purchased separately).
❷	**Tri antenna passthrough** (optional)	Connects to the docking station for using external GPS/WWAN/WLAN antenna.

Getting Your Device Ready for Use

Installing the Micro-SIM Card (Optional) and Battery Packs

1. **Select models only:**

   Your device supports dual SIM operation. If you have only one SIM card, insert it in SIM 1 slot.

   Noting the orientation, insert the micro-SIM card all the way into the slot.

NOTE: To remove the micro-SIM card, just push in the card to release it and then pull it out.

2. The device has two battery compartments for two battery packs; each is installed in the same way.

   With the battery pack correctly oriented, attach its connector side to the battery compartment at an angle (❶) and then press down the other side (❷).

NOTE: If you have the high-capacity battery model, the battery pack looks different from the one shown here. The removal/installation method is the same.

3. Slide the battery latch toward the locked position (🔒).

CAUTION: Make sure the battery latch is correctly locked, not revealing the underneath red part.

Correct

Incorrect (revealing red part)

Using the Tether

A tether is provided for attaching the stylus to your device.

1. Thread one of the tether's loops through the hole of the stylus (❶). Then, insert the other loop through the first loop (❷) and pull the tether tight.

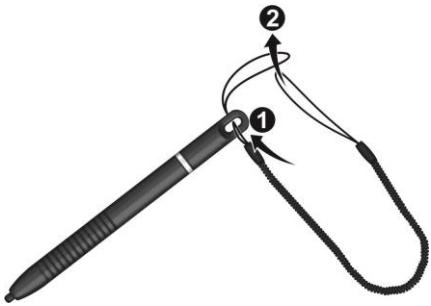

2. Insert the other loop to the tether hole on the device (❶). Then, insert the stylus through the loop (❷) and pull it tight.

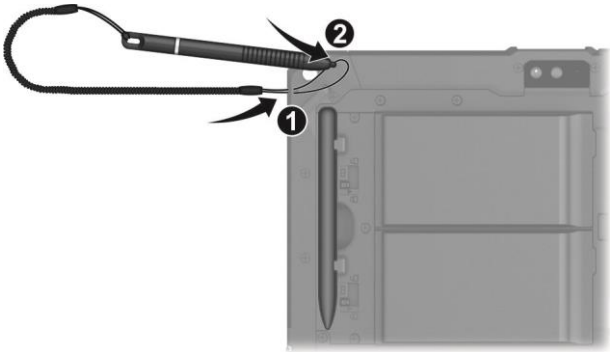

Connecting to AC Power and Charging the Battery

NOTE:

- The battery pack is shipped to you in power saving mode that protects it from charging/discharging. It will get out of the mode to be ready for use when you install the battery pack and connect AC power to the device for the very first time.
- Charging will not start if the battery's temperature is outside the allowed range, which is between 2 °C (35.6 °F) and 50 °C (122 °F). Once the battery's temperature meets the requirements, charging automatically resumes.

1. Plug the DC cord of the AC adapter to the power connector of the device (❶).

   Plug the female end of the AC power cord to the AC adapter and the male end to an electrical outlet (❷).

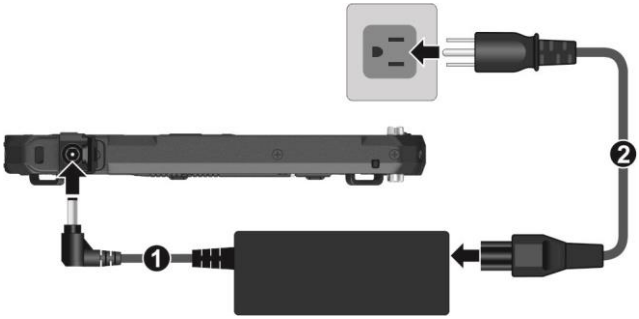

2. The charge indicator glows in amber when charging is in progress. Do not disconnect your device from AC power until the battery is fully charged, as indicated by the amber indicator turning into green. This will take a couple of hours.

Performing the Initial Startup

NOTE: You must use AC power when starting up the device for the very first time.

When turning on your device for the very first time, you will be guided through a setup process.

1. Make sure that your device is connected to AC power.
2. To turn on the device, press and hold the power button for at least 3 seconds until the Power indicator lights up.

   The device powers up and displays the initial screen.
3. Follow the on-screen instructions to complete the initial setup process.

   After the setup is completed, the Home screen appears. You can now use your device.

Chapter 2

Operating Basics

This chapter familiarizes you with the basic operations of your device.

CAUTION:

- Do not expose your skin to the device when operating it in a very hot or cold environment.
- The device can get uncomfortably warm when you use it in high temperatures. As a safety precaution in such a circumstance, do not place the device on your lap or touch it with your bare hands for extended periods of time. Prolonged body contact can cause discomfort and potentially a burn.
- When the device is placed flat on a table top for work, the back surface can get hot after long working hours. Take precautions if you need to carry the device around while it is hot to the touch. Depending on your model, a carrying handle or strap may be available as an option. You can use the handle or strap to carry the device.

Waking Up and Shutting Down

Waking Up

Your device sleeps after a period of inactivity. To wake up, press the power button and, at the lock screen, drag the lock icon to the other side of the screen.

Shutting Down

Press and hold the power button until a menu pops up. Tap **Power off**.

NOTE: If the device somehow cannot display the power off menu, you can force the device to power off by pressing and holding the power button for more than 8 seconds.

Navigating on the Screen

Use the stylus (or your finger) to navigate and select objects on the screen. Here are some common terms that you should know when using the touchscreen:

- **Tap**
  Touch the screen once with the stylus to open an item or select an object.
- **Tap and hold**
  Touch and hold the stylus on an item to see a list of actions available for that item.
- **Drag**
  Hold the stylus on an item and, without lifting the stylus, move across the screen until you reach the target position.
- **Swipe** or **slide**
  Move the stylus across the screen, without pausing when you first touch it (so you don't "drag" instead). For example, you slide the screen up or down to scroll a list.
- **Pinch**
  In some applications (such as Maps and Photos), you can zoom in and out by placing two fingers on the screen at once and pinching them together (to zoom out) or spreading them apart (to zoom in).

NOTE:

- An optical film has been attached to the screen before shipment. The film is a consumable, which will be worn out by possible scratches. You can purchase a new one when replacement is required.
- When the touchscreen does not seem to respond, put the device to sleep and then wake it. The screen should function again.

Chapter 3

Getting Connected

This chapter tells you how you can get your device connected through a variety of ways.

Wireless Connections

Using WWAN (Select Models Only)

NOTE: Your model only supports data transmission. Voice transmission is not supported.

Select models support 4G LTE connectivity and dual SIM operation.

Mobile network is enabled by default. The icons in the status bar indicate which kind of data network you're connected to and the network signal strength.

To check or modify settings, go to **Settings** → **Network & internet** → **Mobile network**.

To check the specific WWAN module information, go to **Getac Settings** and check the items under **LTE.**

Using Wi-Fi Networks

Turning On/Off the Wi-Fi Radio

Open **Quick Settings** and tap the Wi-Fi icon.

When the Wi-Fi radio is turned on, the icon appears in the status bar. If your device finds a network that you connected to previously, it connects to it.

Connecting to a Wi-Fi Network

1. Open **Quick Settings**. Tap and hold the Wi-Fi icon.
   - or -
   Go to **Settings**→ **Network & internet** → **Wi-Fi**.

2. Your device scans for available Wi-Fi networks and displays the names in the screen.

3. On the list of discovered networks, tap the one you want to connect to.

4. If the network is secured, you're prompted to enter a password or other credentials.

   If the network is open, you are prompted to confirm that you want to connect to that network by tapping **Connect**.

Using the Bluetooth Function

NOTE: Getac does not guarantee the product's compatibilities with the Bluetooth headsets/devices from all manufacturers.

Turning On/Off the Bluetooth Radio

Open **Quick Settings** and tap the Bluetooth icon.

Pairing with a Bluetooth Device

The first time you use a new Bluetooth device with your device, you must "pair" them, so that they know how to connect securely to each other. After that, you can simply connect to a paired device.

1. Open **Quick Settings**. Tap and hold the Bluetooth icon.
   - or -
   Go to **Settings** → **Connected devices**.

2. Tap **Pair new device**.

   Your device scans for and displays the IDs of all available Bluetooth devices in range.

3. On the list of discovered devices, tap the ID of the device you want to pair with.

4. The devices pair with each other. If you're prompted to enter a passcode, try entering 0000 or 1234 (the most common passcodes), or consult the documentation that came with the device to learn its passcode.

   If the pairing is successful, your device connects to the device. The icon appears in the status bar.

External Connections

Connections via USB Type-C

Your device has a USB Type-C connector. "USB Type-C" (or simply "USB-C") is a physical USB connector format that features small size and free orientation. This connector supports:

- **USB 3.2 Gen 1** (data transfer rate up to 5 Gbps)
  You can connect your device to a computer with the USB cable, to transfer files between your device and the computer. Use the USB cable (available to you as an option) to connect the device to a USB connector on your computer.

- **DisplayPort over USB-C**

- **USB Power Delivery**
  Note that you should use the appropriate wattage/voltage USB-C power adapter for your specific model.
  USB-C power adapter specifications: 45 W (or above), 9 V (or above)

NOTE: You can still connect a USB device that has traditional connector types to the USB-C connector as long as you have a proper adapter.

Connections via USB Type-A

Your device has a USB 2.0 Type-A host connector for connecting USB peripheral devices, such as a USB drive.

Using a MicroSD Card

To insert a microSD card:

Noting the orientation, insert the card into the slot.

To remove a microSD card:

You can safely remove the microSD card from your device any time the device is shut down. If you need to remove the card while the device is on, unmount the card first to prevent corrupting or damaging the card.

To unmount:

1. Go to **Settings** → **Storage** and then tap the **Eject** icon next to your microSD card.
2. Open the cover. Press the edge of the card to release it and then pull the card out of the slot.

Connecting an Audio Device

The audio combo connector is the “4-pole TRRS 3.5mm” type so you can connect a compatible headset microphone.

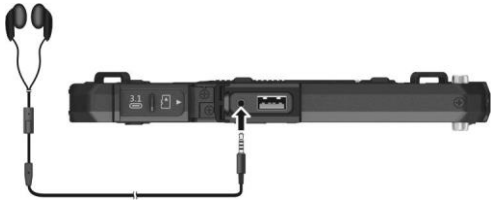

SAFETY WARNING:

To prevent possible hearing damage, do not listen at high volume levels for long periods.

Using a Smart Card (Select Models Only)

To insert a smart card:

1. Locate the smart card reader. Open the cover.
2. With the embedded computer chip facing front and near the slot, slide the smart card into the slot.

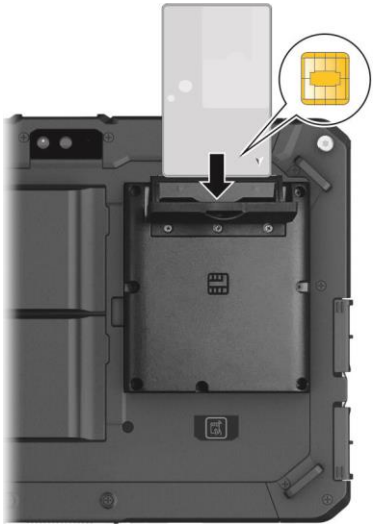

3. Close the cover.

To remove a smart card:

1. Make sure that the third-party smart card software is not accessing the smart card.
2. Open the cover.
3. Press the edge of the card to release it and then pull the card out of the slot.
4. Close the cover.

Chapter 4

Managing Your Device

This chapter tells you how to manage power and customize your device.

Managing Power

The operating time of a fully charged battery depends on how you are using the device. Some functions, such as using multimedia or operating a microSD card, may consume the battery power considerably.

CAUTION: Always keep both battery packs installed, especially when the device is running on battery power. A battery pack can be removed only when it is not being charged/discharged or if you are hot-swapping the battery pack.

NOTE:

- The battery has a self-protection mechanism which limits the maximum charge of the battery to 80% of its total capacity in particular situations. In such situations, the battery will be regarded as fully charged at 80% capacity.
- The battery level may automatically lessen due to the self-discharge process, even when the battery is fully charged.

Low Battery Signals and Actions

CAUTION: When you recharge the battery upon a warning of low power, you should charge for at least 30 minutes. If you unplug the AC adapter soon, you may not have sufficient battery power for your operation.

The battery status (charging or discharging) and level (as a percentage of fully charged) are displayed at the top of the screen. To check the battery information, go to **Settings** → **Battery**.

You should save your data and recharge the battery immediately upon a warning of low power; otherwise your device will turn off automatically. You need to connect the device to external AC power for charging before you can use it again.

Replacing the Battery Pack

CAUTION:

- There is danger of explosion if the battery is incorrectly replaced. Replace the battery only with the device manufacturer's battery packs. Discard used batteries according to the dealer's instructions.
- Do not attempt to disassemble the battery pack.
- A battery pack can get hot due to long working hours. Do not touch a hot battery pack with bare hands. After removing a battery pack, put it in a well-ventilated area.

NOTE:

- You can hot swap one battery pack while the other one is supplying the power. The appropriate temperature range for hot swapping the battery pack is between -21°C (-5.8 °F) and 45 °C (113 °F).
- If you have the high-capacity battery model, the battery pack looks different from the one shown here. The removal/installation method is the same.

To replace the battery pack, follow these steps:

1. Skip this step if you are hot swapping the battery pack.

   Turn off the device and disconnect the AC adapter. After turning off the device, allow a cool-down time of at least 5 minutes before removing the battery pack.

2. Locate the battery pack you want to remove.

3. Slide the battery latch toward the right (❶) and then upwards (❷) to release the battery pack.

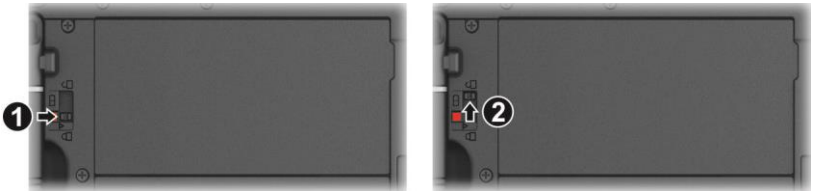

4. Remove the battery pack from its compartment.

5. Fit another battery pack into place. With the battery pack correctly oriented, attach its connector side to the battery compartment at an angle (❶) and then press down the other side (❷).

6. Slide the battery latch toward the locked position (🔒).

CAUTION: Make sure the battery latch is correctly locked, not revealing the underneath red part.

Correct

Incorrect (revealing red part)

Power-Saving Tips

You can extend your battery's life between charges by turning off features that you don't need. You can also monitor how apps and system resources consume battery power.

- Enable Battery Saver. Set a shorter screen timeout.
- Decrease the LCD brightness to the lowest comfortable level.
- Lower the volume.
- Turn off the wireless radio if you are not using the wireless module.
- If you don't need it, turn off automatic syncing for all apps.
- Avoid power-consuming apps. To check which apps consume the most battery power, go to **Settings** → **Battery**.

Battery Guidelines

For optimal performance of the battery, take note of the following:

- During charging, do not disconnect the AC adapter before the battery has been fully charged; otherwise you will get a prematurely charged battery.
- There is no need to fully discharge the battery before charging. You can charge the battery before it is discharged.
- As a battery protection, store the device where the temperature is appropriate. Avoid high temperatures.
- If you will not use the product for a long period of time, be sure to fully charge the battery at least once every two weeks. Over discharge of the battery can affect the charging performance.

Customizing Your Device

NOTE:

- Make sure that you fully understand the function of a certain item before any adjustment.
- Some setting items are available only for specific models or apps you have in your device.

Settings

The **Settings** app contains most of the tools for customizing and configuring the Android device.

To open Settings, use any of the below methods:

- Open **Quick Settings** and tap the **Settings** icon ⚙.
- Open the All Apps screen and tap **Settings.**

For information on standard Android settings, check Google official website for online help.

Getac Settings

Use **Getac Settings** to configure functions specific to your device. Tap the **Getac Settings** app icon , which can be found in the default Home screen, the Getac folder, and the All Apps screen.

Chapter 5

Care and Maintenance

This chapter provides various care and maintenance information.

Restart or Hard Reboot

Restart

To restart the device, press and hold the power button until a menu pops up. Then tap **Restart**.

If the device somehow cannot display the power off menu, you can force the device to power off by pressing and holding the power button for more than 8 seconds. Then start up the device by pressing and holding the power button for at least 3 seconds.

Hard Reboot

In case the device is completely unresponsive, you can perform a hard reboot to solve the problem. Use one of the following methods.

- Press and hold the power button for at least 12 seconds until the Battery Charge indicator blinks red three times. Then release the power button. The device will power off. Start up the device by pressing and holding the power button for at least 3 seconds.
- If the above method does not work, press and hold the power button for at least 16 seconds. During this period, the Battery Charge indicator will blink red three times and then the Power indicator will light up, meaning the device is starting up.

NOTE: Hard reboot can be performed when the power is either on or off.

Caring for Your Device

Taking good care of your device will ensure trouble-free operation and reduce the risk of damage to your device.

- Keep your device away from excessive moisture and extreme temperatures.
- Avoid exposing your device to direct sunlight or strong ultraviolet light for extended periods of time.
- Do not place anything on top of your device or drop objects on your device.
- Do not drop your device or subject it to severe shock.
- Do not subject your device to sudden and severe temperature changes. This could cause moisture condensation inside the unit, which could damage your device. In the event of moisture condensation, allow your device to dry out completely before use.
- To avoid damaging the screen, do not tap it with any sharp object.
- Never clean your device with its power on. Use a soft, lint-free cloth to wipe the screen and the exterior of your device.
- Do not use paper towels to clean the screen.
- Never attempt to disassemble, repair or make any modifications to your device. Disassembly, modification or any attempt at repair could cause damage to your device and even bodily injury or property damage and will void the warranty.
- Do not store or carry flammable liquids, gases or explosive materials in the same compartment as your device, its parts or accessories.

Chapter 6

Regulatory Information

This chapter provides regulatory statements and safety notices on your device.

NOTE: Marking labels located on the exterior of your device indicate the regulations that your model complies with. Please check the marking labels on your device and refer to the corresponding statements in this chapter. Some notices apply to specific models only.

Regulations Statements

USA Class B Regulations

Federal Communications Commission Radio Frequency Interference Statement

NOTE:

This equipment has been tested and found to comply with the limits for a Class B digital device pursuant to Part 15 of the FCC Rules. These limits are designed to provide reasonable protection against harmful interference in a residential installation. This equipment generates, uses, and can radiate radio frequency energy and, if not installed and used in accordance with the instructions, may cause harmful interference to radio communications. However, there is no guarantee that interference will not occur in a particular installation. If this equipment does cause harmful interference to radio or television reception, which can be determined by turning the equipment off and on, the user is encouraged to try to correct the interference by one or more of the following measures:

- Reorient or relocate the receiving antenna.

- Increase the separation between the equipment and receiver.
- Connect the equipment into an outlet on a circuit different from that to which the receiver is connected.
- Consult the dealer or an experienced radio/TV technician for help.

Any changes or modifications not expressly approved by the manufacturer could void the user's authority to operate the equipment.

This transmitter must not be co-located or operating in conjunction with any other antenna or transmitter.

Operations in the 5.15-5.25GHz band are restricted to indoor usage only.

This device meets all the other requirements specified in Part 15E, Section 15.407 of the FCC Rules.

Radiation Exposure Statement (<20cm from body / SAR needed):

The product comply with the FCC portable RF exposure limit set forth for an uncontrolled environment and are safe for intended operation as described in this manual. The further RF exposure reduction can be achieved if the product can be kept as far as possible from the user body or set the device to lower output power if such function is available.

Please note:

The use of a non-shielded interface cable with this equipment is prohibited.

This device complies with Part 15 of the FCC Rules. Operation is subject to the following two conditions: (1) This device may not cause harmful interference, and (2) this device must accept any interference received, including interference that may cause undesired operation.

Company name: Getac USA
Address: 15495 Sand Canyon Rd., Suite 350 Irvine, CA 92618 USA
Phone: 949-681-2900

Industry Canada Statement

This device complies with Industry Canada license-exempt RSS standard(s). Operation is subject to the following two conditions:

1) this device may not cause interference, and
2) this device must accept any interference, including interference that may cause undesired operation of the device.

Le présent appareil est conforme aux CNR d'Industrie Canada applicables aux appareils radio exempts de licence. L'exploitation est autorisée aux deux conditions suivantes:

1) l'appareil ne doit pas produire de brouillage, et
2) l'utilisateur de l'appareil doit accepter tout brouillage radioélectrique subi, même si le brouillage est susceptible d'en compromettre le fonctionnement.

This Class B digital apparatus complies with Canadian ICES-003.

Cet appareil numérique de la classe B est conforme à la norme NMB-003 du Canada.

This device and its antenna(s) must not be co-located or operating in conjunction with any other antenna or transmitter, except tested built-in radios.

Cet appareil et son antenne ne doivent pas être situés ou fonctionner en conjonction avec une autre antenne ou un autre émetteur, exception faites des radios intégrées qui ont été testées.

Caution :

(i) the device for operation in the band 5150-5250 MHz is only for indoor use to reduce the potential for harmful interference to co-channel mobile satellite systems;

(ii) for devices with detachable antenna(s), the maximum antenna gain permitted for devices in the bands 5250-5350 MHz and 5470-5725 MHz shall be such that the equipment still complies with the e.i.r.p. limit; (detachable antenna only).

(iii) for devices with detachable antenna(s), the maximum antenna gain permitted for devices in the band 5725-5850 MHz shall be such that the equipment still complies with the e.i.r.p. limits as appropriate; (detachable antenna only).

(iv) where applicable, antenna type(s), antenna models(s), and worst-case tilt angle(s) necessary to remain compliant with the e.i.r.p. elevation mask requirement set forth in section 6.2.2.3 shall be clearly indicated.

Avertissement:

Le guide d'utilisation des dispositifs pour réseaux locaux doit inclure des instructions précises sur les restrictions susmentionnées, notamment :

(i) les dispositifs fonctionnant dans la bande 5150-5250 MHz sont réservés uniquement pour une utilisation à l'intérieur afin de réduire les risques de brouillage préjudiciable aux systèmes de satellites mobiles utilisant les mêmes canaux;

(ii) pour les dispositifs munis d'antennes amovibles, le gain maximal d'antenne permis pour les dispositifs utilisant les bandes de 5 250 à 5 350 MHz et de 5 470 à 5 725 MHz doit être conforme à la limite de la p.i.r.e; (detachable antenna only).

(iii) pour les dispositifs munis d'antennes amovibles, le gain maximal d'antenne permis (pour les dispositifs utilisant la bande de 5 725 à 5 850 MHz) doit être conforme à la limite de la p.i.r.e. spécifiée, selon le cas; (detachable antenna only).

(iv) lorsqu'il y a lieu, les types d'antennes (s'il y en a plusieurs), les numéros de modèle de l'antenne et les pires angles d'inclinaison nécessaires pour rester conforme à l'exigence de la p.i.r.e. applicable au masque d'élévation, énoncée à la section 6.2.2.3, doivent être clairement indiqués.

For Portable Devices (<20cm from body / SAR needed)

Radiation Exposure Statement

The product complies with the Canada portable RF exposure limit set forth for an uncontrolled environment and are safe for intended operation as described in this manual. The further RF exposure reduction can be achieved if the

product can be kept as far as possible from the user body or set the device to lower output power if such function is available.

Déclaration d'exposition aux radiations

Le produit est conforme aux limites d'exposition pour les appareils portables RF pour les Etats-Unis et le Canada établies pour un environnement non contrôlé. Le produit est sûr pour un fonctionnement tel que décrit dans ce manuel. La reduction aux expositions RF peut être augmentée si l'appareil peut être conservé aussi loin que possible du corps de l'utilisateur ou que le dispositif est réglé sur la puissance de sortie la plus faible si une telle fonction est disponible.

Europe Marking and Compliance Notices

Statements of Compliance

English
This product follows the provisions of the European Directive 2014/53/EU.

Danish
Dette produkt er i overensstemmelse med det europæiske direktiv 2014/53/EU.

Dutch
Dit product is in navolging van de bepalingen van Europees Directief 2014/53/EU.

Finnish
Tämä tuote noudattaa EU-direktiivin 2014/53/EU määräyksiä.

French
Ce produit est conforme aux exigences de la Directive Européenne 2014/53/EU.

German
Dieses Produkt entspricht den Bestimmungen der Europäischen Richtlinie 2014/53/EU.

Greek
Το προϊόν αυτό πληροί τις προβλέψεις της Ευρωπαϊκής Οδηγίας 2014/53/EU.

Icelandic
Þessi vara stenst reglugerð Evrópska Efnahags Bandalagsins númer 2014/53/EU.

Italian
Questo prodotto è conforme alla Direttiva Europea 2014/53/EU.

Norwegian
Dette produktet er i henhold til bestemmelsene i det europeiske direktivet 2014/53/EU.

Portuguese
Este produto cumpre com as normas da Diretiva Européia 2014/53/EU.

Spanish
Este producto cumple con las normas del Directivo Europeo 2014/53/EU.

Swedish

Denna produkt har tillverkats i enlighet med EG-direktiv 2014/53/EU.

Notices

Max power:

WLAN 2.4G: 17.5 dBm
WLAN 5G: 11.5 dBm
BT: 10 dBm
NFC: -19.13dBuA/m@10m
WWAN: 24 dBm

The device is restricted to indoor use only when operating in the 5150 to 5350 MHz frequency range.

	BE	BG	CZ	DK	DE	EE
	IE	EL	ES	FR	HR	IT
	CY	LV	LT	LU	HU	MT
	NL	AT	PL	PT	RO	SI
	SK	FI	SE	NO	IS	LI
	CH	TR	UK (NI)			

Restriction or Requirement in the UK: 5150 to 5350 MHz indoor-use only.

	UK

	Waste Electrical and Electronic Equipment (WEEE) This symbol means that according to local laws and regulations your product and/or its battery shall be disposed of separately from household waste. When this product reaches its end of life, take it to a collection point designated by local authorities. Proper recycling of your product will protect human health and the environment.

RF Exposure Information (SAR)

This device has been tested and meets applicable limits for Radio Frequency (RF) exposure.

Specific Absorption Rate (SAR) refers to the rate at which the body absorbs RF energy. SAR limits are 1.6 Watts per kilogram (over a volume containing a mass of 1 gram of tissue) in countries that follow the United States FCC limit and 2.0 W/kg (averaged over 10 grams of tissue) in countries that follow the Council of the European Union limit. Tests for SAR are conducted using standard operating positions with the device transmitting at its highest certified power level in all tested frequency bands.

This device was tested with a separation distance of 5 mm. Always keep this device away from your body to ensure exposure levels remain at or below the as-tested levels.

Safety Precautions

- Prolonged listening of music in maximum volume can damage the ears.

About Charging

- Use only the charger supplied by the manufacturer. Use of another type will result in malfunction and/or danger.
- This product is intended to be supplied by a LISTED Power Unit marked with "LPS," "Limited Power Source," and output rated + 12 V dc / 2.0 A (minimum).
- Use a specified cradle approved by the manufacturer.

About the AC Adapter

- If a ground/earth pin attachment plug on the AC power cord is provided, always plug the cord into a grounded/earthed outlet. Do not disable ground/earth pin of the plug/cord.
- Do not use the AC adapter in a high moisture environment. Never touch the AC adapter when your hands or feet are wet.
- Allow adequate ventilation around the AC adapter when using it to operate the device or charge the battery. Do not cover the AC adapter with paper or other objects that will reduce cooling. Do not use the AC adapter while it is inside a carrying case.
- Connect the AC adapter to a proper power source. The voltage and grounding requirements are found on the product case and/or packaging.

- Do not use the AC adapter if the cord becomes damaged.
- Do not attempt to service the unit. There are no serviceable parts inside. Replace the unit if it is damaged or exposed to excess moisture.
- Specific models do not have the AC adapter and power cord as standard items. To purchase the AC adapter kit for your model, contact a Getac authorized distributor. (Check https://www.getac.com/en/contact/ for contact information.)

About the Battery

Caution for service personnel: Risk of explosion if battery is replaced by an incorrect type. Dispose of used batteries according to the instructions.

If the battery is mishandled, it may cause fire, smoke or an explosion and the battery's functionality will be seriously damaged. The safety instructions listed below must be followed.

Danger

- Do not charge/discharge or place the battery in high-temperature (more than 80 °C / 176 °F) locations, such as near a fire, heater, in a car in direct sunlight, etc.
- Do not use unauthorized chargers.
- Do not force a reverse-charge or a reverse-connection.
- Keep the system and battery away from an extremely low air pressure environment as it may result in an explosion or the leakage of flammable liquid or gas.

Warning

- Keep the battery away from infants.
- Stop using the battery if there are noticeable abnormalities such as abnormal smell, heat, deformities, or discoloration.
- Stop charging if the charging process cannot be finished.
- In case of a leaking battery, keep the battery away from flames and do not touch it.

Caution

- Do not use the battery where static electricity (more than 100V) exists that might damage the protection circuit of the battery.
- When children are using the system, parents or adults must ensure that they are using the system and battery correctly.
- Keep the battery away from flammable materials during charging and discharging.

Heat Related Concerns

Your device may become very warm during normal use. It complies with the user-accessible surface temperature limits defined by the International Standards for Safety. Still, sustained contact with warm surfaces for long periods of time may cause discomfort or injury. To reduce potential heat-related concerns, follow these guidelines:

- Keep your device and its AC adapter in a well-ventilated area when in use or charging. Allow for adequate air circulation under and around the device.
- Use common sense to avoid situations where your skin is in contact with your device or its AC adapter when it's operating or connected to a power source. For example, don't sleep with your device or its AC adapter, or place it under a blanket or pillow, and avoid contact between your body and your device when the AC adapter is connected to a power source. Take special care if you have a physical condition that affects your ability to detect heat against the body.
- If your device is used for long periods, its surface can become very warm. While the temperature may not feel hot to the touch, if you maintain physical contact with the device for a long time, for example if you rest the device on your lap, your skin might suffer a low-heat injury.
- If your device is on your lap and gets uncomfortably warm, remove it from your lap and place it on a stable work surface.
- Never place your device or AC adapter on furniture or any other surface that might be marred by exposure to heat since the base of your device and the surface of the AC adaptor may increase in temperature during normal use.

User Notification of Take-back Service

To Institutional (B2B) Users in United States:

Getac believes in providing our institutional customers with easy-to-use solutions to recycle your Getac-brand products for free. Getac understands the institutional customers will likely be recycling multiple items at once and as such. Getac wants to make the recycling process for these larger shipments as streamlined as possible. Getac works with recycling vendors with the highest standards for protecting our environment, ensuring worker safety, and complying with global environmental laws. Our commitment to recycling our old equipment grows out of our work to protect the environment in many ways.

Please see the product type below for information on Getac product, battery and packaging recycling in USA.

- **For Product Recycling:**
  Your portable Getac products contain hazardous materials. While they pose no risk to you during normal use, they should never be disposed with other wastes. Getac provides a free take-back service for recycling your Getac products. Our electronics recycler will provide competitive bids for recycling non-Getac products as well.
- **For Battery Recycling:**
  The batteries used to power your portable Getac products contain hazardous materials. While they pose no risk to you during normal use, they should never be disposed with other wastes. Getac provides a free take-back service for recycling your batteries from Getac products.
- **For Packaging Recycling:**
  Getac has chosen the packaging materials used to transport our products carefully, to balance the requirements of shipping the product to you safely while minimizing the amount of material used. The materials used in our packaging are designed to be recycled locally.

If you have the above for recycling, please visit our website
https://us.getac.com/aboutgetac/environment.html

ENERGY STAR

ENERGY STAR® is a government program that offers businesses and consumers energy-efficient solutions, making it easy to save money while protecting the environment for future generations.

Please reference ENERGY STAR® related information from http://www.energystar.gov.

As an ENERGY STAR® Partner, Getac Technology Corporation has determined that this product meets the ENERGY STAR® guidelines for energy efficiency.

An ENERGY STAR® qualified computer uses 70 % less electricity than computers without enabled power management features.

Earning the ENERGY STAR®

- When every home office is powered by equipment that has earned the ENERGY STAR®, the change will keep over 289 billion pounds of greenhouse gases out of the air.
- If left inactive, ENERGY STAR® qualified computers enter a low-power mode and may use 15 watts or less. New chip technologies make power management features more reliable, dependable, and user-friendly than even just a few years ago.
- Spending a large portion of time in low-power mode not only saves energy, but helps equipment run cooler and last longer.
- Businesses that use ENERGY STAR® enabled office equipment may realize additional savings on air conditioning and maintenance.

- Over its lifetime, ENERGY STAR® qualified equipment in a single home office (e.g., computer, monitor, printer, and fax) can save enough electricity to light an entire home for more than 4 years.
- Power management ("sleep settings") on computers and monitors can result in much savings annually.

Remember, saving energy prevents pollution

Because most computer equipment is left on 24 hours a day, power management features are important for saving energy and are an easy way to reduce air pollution. By using less energy, these products help lower consumers' utility bills, and prevent greenhouse gas emissions.

Getac Product Compliance

All Getac products with ENERGY STAR® logo comply with the ENERGY STAR® standard. By default, the device will sleep after 1 minute of inactivity and, if remaining idle for some time, will enter a deep sleep mode that saves more battery power. You can use **Settings** to configure various power management settings.

Please visit http://www.energystar.gov/powermanagement for detail information on power management and its benefits to the environment.

California Proposition 65

For California USA:

Proposition 65, a California law, requires warnings to be provided to California consumers when they might be exposed to chemical(s) identified by Proposition 65 as causing cancer and birth defects or other reproductive harm.

Almost all electronic products contain 1 or more of the chemicals listed under Proposition 65. This does not mean the products pose a significant risk of exposure. As the consumers have the right to know about the products they purchase, we are giving this warning on our packaging and user manual to keep our consumers well informed.

⚠ WARNING

This product can expose you to chemicals including lead, TBBPA or formaldehyde, which are known to the State of California to cause cancer and birth defects or other reproductive harm. For more information go to www.P65Warnings.ca.gov