Revision	Zone	Nature of change A=Added D=Deleted W=Was
01		Tolerance was SS-ISO 2768 f/H
01	D6	Dimension 9.4±0.1 was 9.4

3D model: 624097-04.1

2D drawing: 624693-01.2

70006:06

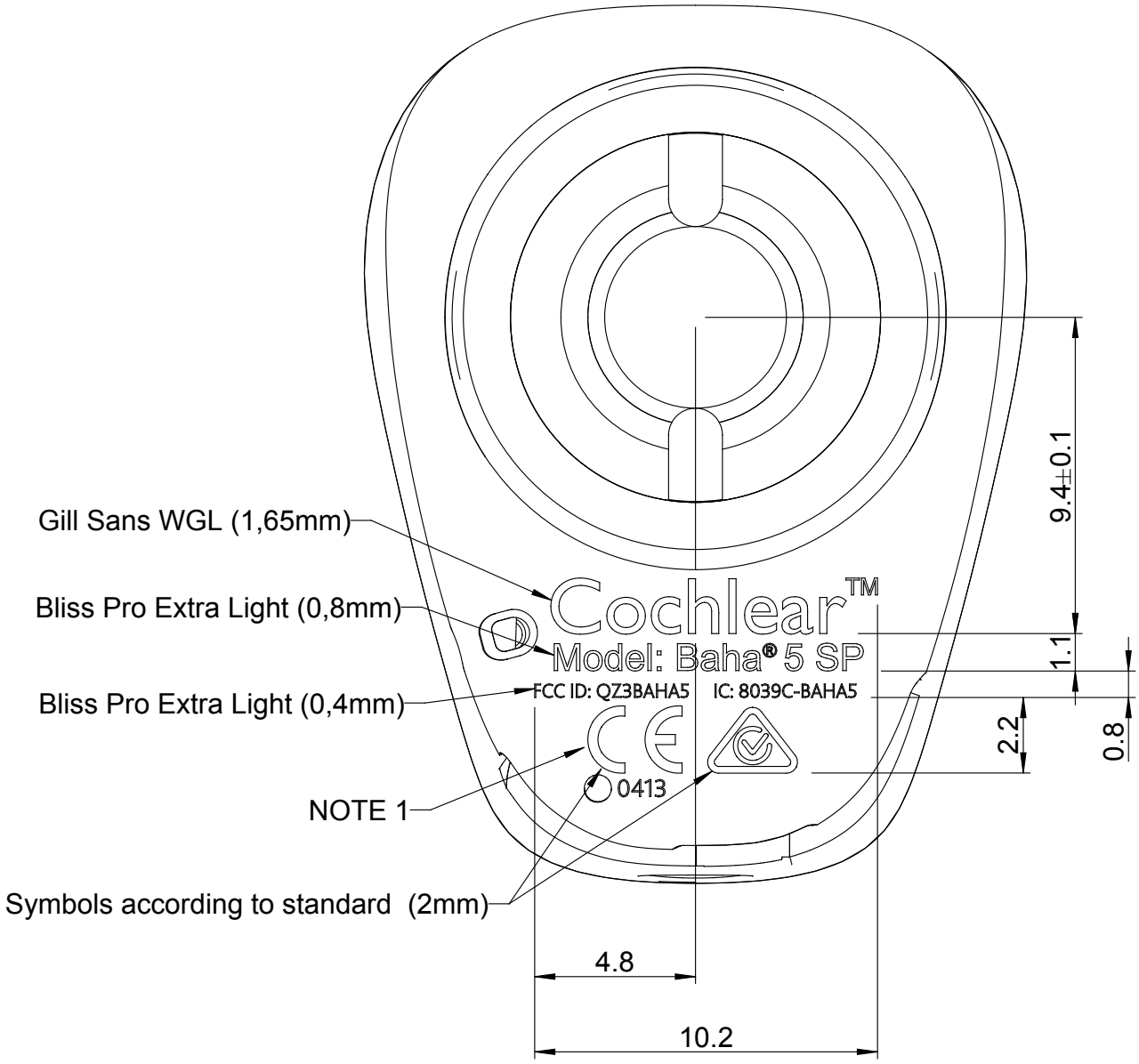

NOTE:
1. COLOUR FOR ALL TEXT AND SYMBOLS: BLACK C

Drawn 2014-04-22 Liridon Dana	Material		Mass
Reviewed 2014-04-22 Marcus Vardfjäll	For dim/radius < 0,5 without specified tolerance ± 0,05 applies		Status Released
Released 2014-04-22 Daniel Rådberg	Tolerance SS-ISO 2768 m/H	* = CRITICAL TO FUNCTION	Projection method E / ECM number 2405
Cochlear™	Name PROTOTYPE - Joe Dalton Pad Print		Scale 5:1 / Format A4 / Sheet 1/1 / Drawing number 624693 / Revision 01

This document is confidential information and the property of Cochlear and must not be copied, shown to or given to any third party without our written permission.