Global Fingerprint Identification Business Solution

Fingerprint Identification Door Lock

User's Manual

S-200

Thank you for using our Ditto product.
Before using this product, read "Cautions for safety" carefully to ensure correct use.
Please keep this User's manual for your reference at any time.

INDEX

B

- Caution for establishment and using 1
- Name of each parts 2
- Main function and characteristics of product 3

U

- Registration of password and fingerprint 5
- Deletion of password and fingerprint 9
- Using when you enter and leave 11
- Additional functions 13

E

- Establishment drawing 15
- Establishment order 16

A

- In case of Error or unusual situation 18
- Product specification 19
- Product quality warranty 20
- Standard of consumer loss compensation 21

B

Suggestions for establishment and use

Before using this product, read "Cautions for safety" carefully to ensure correct use
Please use it according to marked caution for your safety and protecting from product damage.

When you establish this product
Please do not establish it under high temperature and moisture
Please avoid it from direct sunlight and rain

When you use this product
All functions of this product are initialized when it delivered.
After establishment, please register your or your family member's fingerprint as a master according to official's direction.
Please do not register other person's fingerprint as a master
(As for registration and using of this product, please refer to each part manual)
Please do not apply unreasonable strong power to slide cover when you enter and leave.
Please do not wipe it as benzene and alcohol

When you carry this product
Please do not drop and impact on it.
Please do not carry it when the slide cover was opened.

Cautions for A/S
We do not take responsibility for any loss or demage by intention after establishment
Please call our customer center when you have any trouble to use this product or when it out of order.

This manual and contents about specification of product can be changed voluntarily for performance improvement of product.

B

Name of each part

Product composition

1.IN BODY

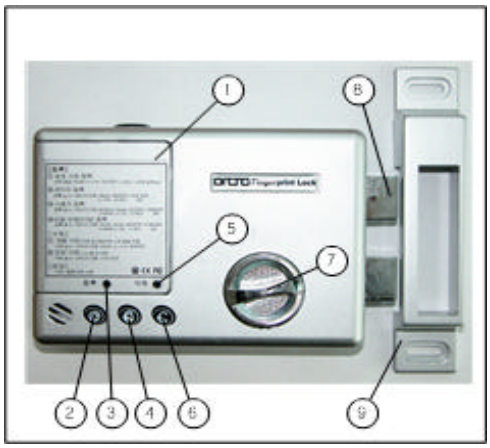

1. Battery case
2. Auto lock button
3. Registation button
4. Open/Lock select button
5. Deletion button
6. Outside lock button (Outside interception.....)
7. Open/Lock Lever
8. Latch
9. Latch ring

2.OUT BODY

1. No guide window
2. LED Lamp
3. Fingerprint sensor
4. No function button
5. Input/Confirm button
6. Lock button

Contents			
Fingerprint Identification door lock:	1	User's Manual:	1
Screw for fixing:	16	Latch :	1
Battery(AA size):	4	Drawing for drilling	1

B

Main function and characteristics

1.Interception function to outside
No one can not enter from outside if you set this function

2.Identification function by master
It is impossible to register, modify and delete without master.

3.Password(3~9digits)
You can use this function when the sensor out of order or your fingerprint is damaged

4.Deletion function of part
You can delete and change fingerprint with registered ID.

5.Adoption of outside communication terminal
This function makes it possible to easy ungrade and self-test.

6.Power saving function
You can use it for a long time without change of battery

7.Protection function of circuit
This function protect circuit from static electricity and moisture and help to do stable operation.

8.Adoption slide cover
We maximize sensor protect and waterproof function

9. Lock function by one touch 원터치 잠금 기능
It operated by pressing only one button when you lock and open

10. Adoption emergency power supply (9v)

This function makes it possible to enter and leave when the battery is discharged

11. Convenient No. key
It is convenient to use when you enter/leave

12.Display function of user
It is easy to administrate registration, modification and etc due to given ID of fingerprint and password

13.Optical indication window
It offers you convenient service with indicate operation state shown in display window. Also you can hide above information according to your needs.

14.Low voltage warning function
Buzzer for the time to change battery

15.Hand/Auto lock function
When you establish auto lock function, doors are locked automatically after 7sec. Also You can change mode to hand operation when enter and leave does frequently

16.System suspension function when identification is refused 3times
This system is suspended for 30seconds when identification is refused 3times

17. Convenient power interception switch
Please press CLOSE button outside to intercept power.

18. Selection of invisible password function according to user's need
It prevent exposure of your password when you enter and leave with it.

Registration mode

1.First Fingerprint Registration

At first, you have to register your fingerprint as a master because there is no fingerprint information when it delivered. If there is one person to register as master, please register reliable fingerprint to easy identification . Also registration of several fingerprints are available.

① After establishment, if you open the cover or put any button, you can register your fingerprint as a master.

② The first ID will indicate [ ] .

The ID can be changed by user's fondness using NUM/CLR button [ ]

Please press ENTER button[ ] after confirming ID

(Master ID : [ ] ~ [ ])

③ Please put your fingerprint to register sensor when the LED is turned red.

⚠Caution:Please don't move your finger when you register your fingerprint.

④ The LED will change green color if you put your fingerprint to right place for registration. The LED will turn off after finishing registration and remove your fingerprint from the sensor.

⑤ The LED will change red again and repeat the action which you have done No. ④ 3 times. If the registration is finished by normally, display window indicate [ ],[ ],[ ]. If the registration failed, system restarted from first order. Please do it again you have done in above.

⑥ When the registration is completed, the LED will change green and you can hear buzzer sound. Also you can check your ID through the display window. You can set option function after finishing registration. (Registration, Deletion, Modification)

Please notice that all function will be operated after master identification.

2.Master Fingerprint Registration

(You can not be a master if you use password)

We encouraged that the master should be one of you family members who has a reliable fingerprint. (Master ID : [00]~[03])

① If you raise slide cover or press any button, electric power is supplied to system automatically. If power supply, the LED flickered green color after self-test

② When the LED flickered green color, please press registration button outside[ ] until you can hear buzzer sound.

③ Please input registered fingerprint as master when the LED flickered green color and display window indicates [00].

④ The LED will indicate new ID after identification as a master, if you use the ID without change please choose ENTER button[ ]. Also you can choose your ID through using NUM/CLR button[ ]. After confirming your ID, please press ENTER button[ ]

The registration to be completed in the accordance with the three times input of the master's fingerprint after ID selection.

(For input way, please refer to No 3~4 in First fingerprint registration)

3. User registration

User's ID : From [03] to[00]

■ Fingerprint registration

① If you press registration button[ ] shortly once, you can hear buzzer sound

② Please input registered fingerprint as master when the LED flickered green color and display window indicates [00].

③ The LED will indicate new ID after identification as a master, if you use the ID without change please choose ENTER button[ ]. Also you can choose your ID through using NUM/CLR button[ ]. After confirming your ID, please press ENTER button[ ]. At this time the lamp in button flickered green color

☞ Reference: When you make mistake ID input, you can return to First ID if you press NUM/CLR [NUM/CLR] button long.

④Please input fingerprint which you want to register when the LED change to red.

⚠Caution:Please don't move your finger when you register your fingerprint.

⑤If you put your finger to right place LED change to green color. After finishing registration LED turned off. Please remove your finger at this time.

⑥The LED will change red again and repeat the action which you have done No. ④ 3 times. If the registration is finished by normally, display window indicate [88],[88],[88]. If the registration failed, system restarted from first order. Please do it again you have done in above.

⑦When the registration is completed, the LED will change green and you can hear buzzer sound. Also you can check your ID through the display window.

⑧After indicating new ID, the lamp in button flickered. If you want to input additional fingerprint, please press NUM/CLR button[NUM/CLR] . If you want to finish registration, please press ENTER button[ENTER] .

⑨If you press ENTER button[ENTER] there is a registration success confirm process in system The system change to identification mode, After registration is ended. When LED flickered green color, if you input fingerprint, you can enter or leave. In this time display window indicates registered ID.

■ Password registration

☞ Password is available from 3 to 9digits.

① Please press registration button[] shortly.

② Please input registered fingerprint as master when the LED flickered green color and display window indicates [88].

③ The LED will indicate new ID after identification as a master, if you use the ID without change please choose ENTER button[ENTER]. Also you can choose your ID through using NUM/CLR button[NUM/CLR]. After confirming your ID, please press ENTER button[ENTER].At this time the lamp in button flickered green color.

④ If you press NUM/CLR button[NUM/CLR] after ID selection, display window indicates

[ ].

⑤ According to the number of your press of NUM/CLR button[ ], the digit will increased.

⑥ Please press ENTER button to register it when you select first No of your password.

⑦ The display window indicates [ ]. To select the second No of password, please press NUM/CLR button[ ]. If display window indicates the number, please press ENTER button[ ].

⑧ If password for registration consist of many characters, please repeat above action in ⑦ and ⑧ as the number of password.

⑨ To finish password registration, please press ENTER button[ ] again.

☞ EX)If you want to register 3456 as a password The display indicate double digit. First number indicate order of password, and second number indicate number which you want to register. Please press NUM/CLR button [ ] 3 times. If FND indicate [ ], please press ENTER[ ]. Please press NUM/CLR button [ ]4 times. If FND indicate [ ], please press ENTER[ ]. Please press NUM/CLR button [ ] 5 times. If FND indicate [ ], please press ENTER[ ]. Please press NUM/CLR button [ ] 6 times. If FND indicate [ ], please press ENTER[ ]. The first number [ ],[ ],[ ],[ ]in above indicates the order of password. And second number [ ],[ ],[ ],[ ] indicates password. When you finish to register [ ],[ ],[ ],[ ] as a password, please press ENTER button[ ] to complete password registration.

Deletion mode

■ Master deletion (Master's ID : [ ] ~ [ ])

① Please press deletion button [ ] shortly once.

②Please input registered fingerprint as master when the LED flickered green color and display window indicates [ ].

③ After master identification, input master's ID to erase it by NUM/CLR button [ ] and press ENTER button [ ].

④ Please press ENTER button[ ] again to finish deletion.

If you want to do deletion continuously, please press NUM/CLR button [ ] and repeat an action in ③.

⚠Caution : If there are several registered user and only one master, you can delete master after deleting all registered users.

■ User's deletion

There are two type of users who are fingerprint users and password users.

When you want to delete user's information, please select ID and then delete it regardless user's type.

① Please press deletion button[ ] shortly once.

② Please input registered fingerprint as master when the LED flickered green color and display window indicates [ ].

③ After master identification, please press NUM/CLR button[ ] until the display window indicates ID which you want to delete.

④ Please press ENTER button [ ] to delete it.

⑤ Please press ENTER button[ ] again to finish deletion.

If you want to do deletion continuously, please press NUM/CLR button [ ] and repeat actions in ③~④.

■ All deletion (System initialized)

⚠Caution: Please pay attention to this function as this function will delete all information.

① Please press deletion button [⌚] till you can hear buzzer sound.

② Please input registered fingerprint as master when the LED flickered green color and display window indicates [88].

③ The red LED turn on at the same time after finish master identification.

Power turned off after buzzer sound. As this, all information are deleted.

☞ Caution: If you want to use again, please refer to manual about The first fingerprint registration.

Entrance & Exit mode

1. When you enter

■ Using fingerprint

① If you raise slide cover, electric power is supplied to system automatically.
In case electric power is not supplied, please press any button in outside.

② In case electric power is supplied, the LED flickered green color then input fingerprint.

③ If identification is succeeded, LED is change to green color and door is opened with buzzer sound

④ If identification failed, Display window indicate [ ] error. Please put your finger to right place to succeed the identification.

⑤ If identification fails 3 times, display window indicate [ ] error.
In this case, the system is turned off automatically for 30seconds.

> ☞ Caution: In spite of power off, every button and function inside is operated normally

⑥ If you want to use it again, please repeat action in ①~② after 30seconds.

⑦ When you want to lock the door, please press OPEN/CLOSE button [ ] inside. Also you can operate lever in inside by hand

■ Using password

① If you raise a slide cover, electric power is supplied to system automatically.
In case electric power is not supplied, please press any button outside

② Please press NRM/CLR button[ ], when LED flickered green color.

③ When display window indicates [ ], please input the first No of your password using NUM/CLR button[ ].

④ When display window indicates [ ], please input the second No of your password using NUM/CLR button [ ].

⑤ When display window indicates [ ], please input the third No of your

password using NUM/CLR button[ ].

If the registered password is 3digits, please press ENTER button[ ].
Then, identification is completed
If the registered password is more than 3digits, please repeat the actions in ③~⑤. If you input all password, please press ENTER button[ ].
⑥ If identification is succeeded, LED change to green color and door is opened with buzzer sound
⑦ The method to close the door is the same when you use Fingerprint.

☞ When automatic lock function is established, the door is closed automatically after 7 seconds. Otherwise, if you press OPEN/CLOSE button, [ ] the door is also closed.

■ When you leave

① Please press OPEN/CLOSE button[ ] inside or operate lever inside by hand.
② In this state, the door is closed automatically after 7 seconds when you leave.
③ When automatic lock function is not established, please press CLOSE button [ ] outside to close door.

⚠ Caution:After door is closed, If [ ] error mark with buzzer sound is indicated, it means something wrong in lock device. Also, in case door is closed abnormally, you can see the same error mark. In case, please check your door state and repeat above actions.

Additional function

■ Interception from outside

When this function settled :

Please press button[ ] for interception outside shortly.

The display window indicates [ ] with buzzer sound.

Under this function, if you try to enter, the display window indicates [ ] and system is not operated.

When you remove this function: Please press OPEN/LOCK button[ ] inside or interception button[ ] outside.

■ Lock/Open

Door is opened and closed by only one button CLOSE/OPEN.

■ Automatic lock

When this function settled :

Door is closed by automatically after 7 seconds with [ ] sign in display window, if you press Automatic lock button[ ].

When you remove this function:

If you press it[ ] again, this function is removed. When automatic lock function is established, You can press CLOSE/OPEN button within 7sec to close door.

■ Law voltage buzzer sound

If battery replace time arrived, system informs you with buzzer sound after power supply with [ ] sign in display window.

> ⚠ Caution: The system operated normally, after law voltage warning sign. However please change battery because the efficiency is declined as time goes by.

■ When you forget password or ID which registered password

Please use this function, when you forget password or ID which registered password. Please press NUM/CLR button[ ] after pressing registration button[ ]. The display

window indicates [ ], after indicating ID which registered password for 2SEC. Please finish password registration mode, after checking the ID. Please delete the ID in deletion mode. After deletion, please register new password.

■ Selection of invisible password function according to user's need

It prevent exposure of your password when you enter and leave with it.

When LED flickered green color after power supply, please press NUM/CLR button [ ] to indicate password. This is password open function. If you press ENTER button [ ], there is no password in display window. In this please input your password by NUM/CLR button [ ].

■ Operation code

Code	Operation
	Sign of each level when you input your fingerprint 3 times.
	Error code (Please refer to appendix part)
	The order of password.
	When door is opened
	When door is closed
	Under automatic lock function
	Under interception function from outside
	Master identification mode

E

Establishment drawing

■Screw standard

No	Shape	Ea	Standard(mm)	Name
1		6	4*10	Self Drill screw
2		2	5*18	Flat Head Screw
3		2	4*10	Flat Head Screw
4		2	4*14	Pan Head Screw
5		1	3*8	Pan Washer Head Screw

■ Drawing

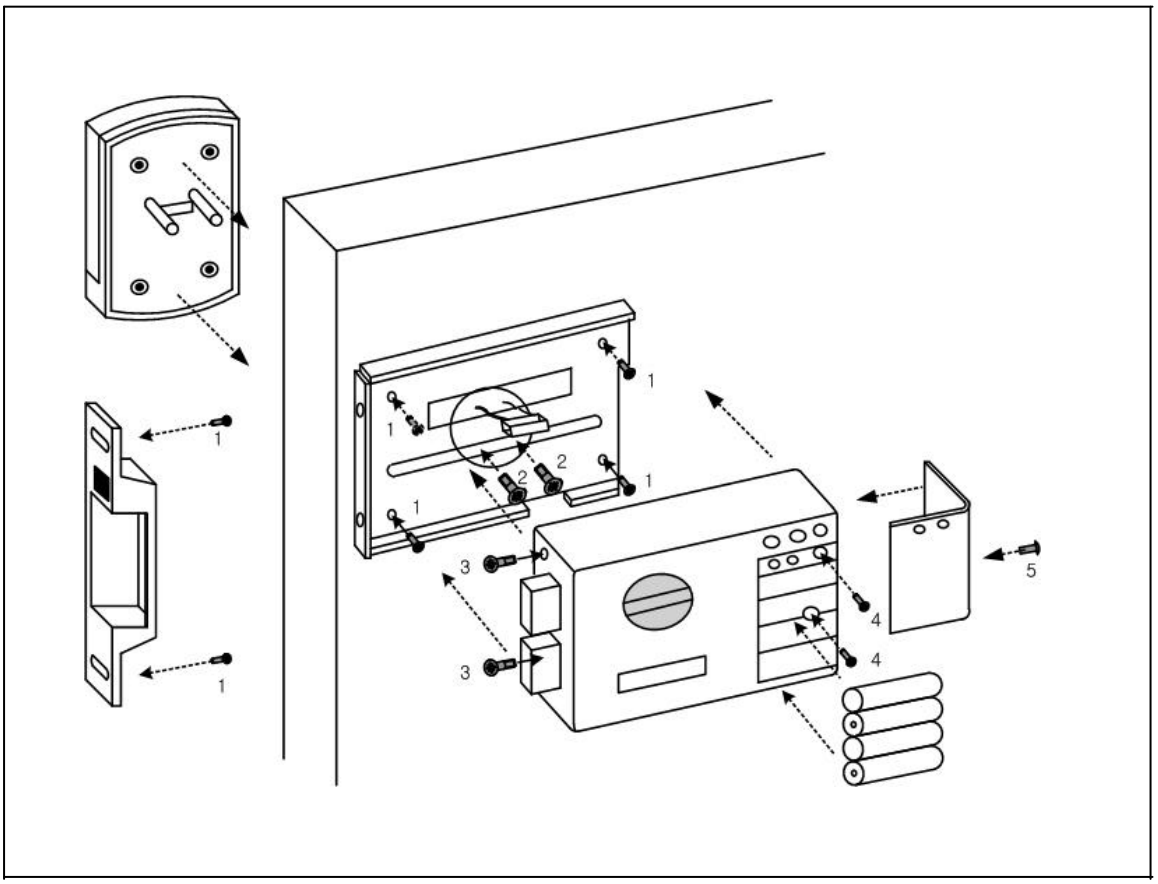

E

Order of Establishment

■ Tool for establishment

1.Hole cutter (32mm~35mm)
2.Drilling machine
3.Cross driver

☞ Caution: As for size of screw, please refer to screw standard chart.

■ Order of Establishment

① According to the drawing, please make a hole which size is from 32mm~35mm to the door.

☞ Caution: If there is a hole in existing door lock location, you can use it

② According to the drawing, please mark with a pencil or pen for the location of screw. Also you can make hole for it.

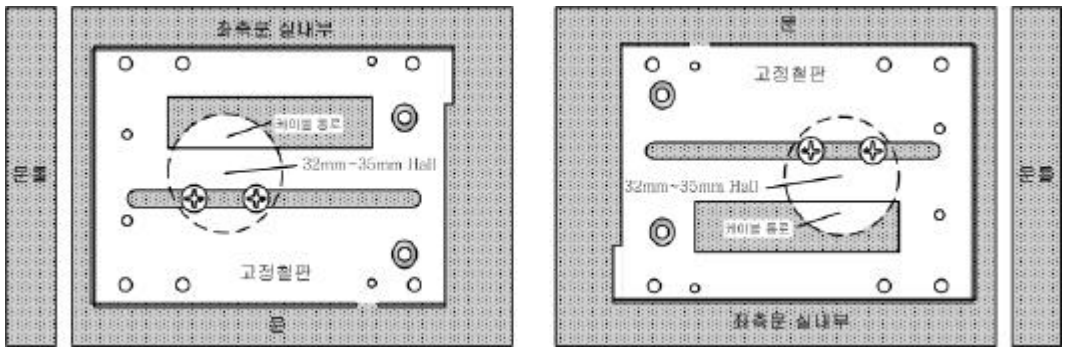

③ After you arrange an iron plate for fixing to inside of door, please fixing it with 4pcs of No 1 screw[ ].

⚠ Caution: Please ensure pathway for cable before fixing it with screw.

④ Please fix case of outside with No 2 screw[ ], after drawing out cable between an iron for fixing

⚠ Caution: Please notice that case of outside do not incline

⑤ Please cork semicircle hole of inside as a black rubber plug.

⑥ Push remained cable after connecting connector of cable with connector of inside to space between doors and arrange it.

⑦ Please fix interior part with No 3[ ] and No 4 [ ]screw

⑧ Please fix hasp ring as No 1screw[ ]on hole which you made beforehand

⚠ Caution: When you fix hasp ring, please make sure there is no friction with hasp of inside.

⑨ Please fix cover with No 5 screw[ ], after put battery at battery case according to direction.

■Examination.

① Please confirm whether hand lever is operated without any problem of friction.

② Please confirm whether there is any error or not, when you press OPEN/LOCK button[ ] inside.

NOTE: This equipment has been tested and found to comply with the limits for a Class B digital device, pursuant to part 15 of the FCC Rules. These limits are designed to provide reasonable protection against harmful interference in a residential installation. This equipment generates, uses and can radiate radio frequency energy and, if not installed and used in accordance with the instructions, may cause harmful interference to radio communications. However, there is no guarantee that interference will not occur in a particular installation. If this equipment does cause harmful interference to

radio or television reception, which can be determined by turning the equipment of and on, the user is encouraged to try to correct the interferenceby one or more of the following measures:

- Reorient or relocate the receiving antenna.
- Increase the separation between the equipment and receiver.
- Connect the equipment into an outlet on a circuit different from that to which the receiver is connected.
- Consult the dealer or an experienced radio/TV technician for help.

CAUTION: Changes or modifications not expressly approved by the party responsible for compliance could void the user's authority to operate the equipment.

In case of Error or unusual situation

■ When error happened

Error	Corrective action
Fingerprint Identification Failure	Please don't move your finger while authentication. Please input registered fingerprint to sensor.
Siren sound	It happens under wrong establishment or try to take a system a pieces by compulsion. Please control fixed screw inside again.
Identification is available but entrance and exit is impossible with buzzer	Please try it again when you pull a door forward.
Fainted lamp and buzzer sound	Please change battery.
When the system is turned off.	Please change battery after connectting 9V battery to emergency power supply terminal

■ Corrective action according to Error

Error code	ERROR	Corrective action
E0	Warning of low voltage	Please change battery
E1	Master identification failure	Please try again after confirming registered fingerprint as a master
E2	Registration, Modification, Deletion Failure	Please don't move your finger while authentication
E3	When identification fails 3 times	
E4	Lock device is operated abnormally	Please try it again after the door is closed normally
E5	At system problem appearance	Please call to A/S
E6	At sensor problem appearance	Please call to A/S
E0	When the registration number of user is exceeded	Please try again after deleting not in use fingerprint
Long buzzer sound	When try to take the item to pieces by compulsion.	Please fasten fixing screw or ask to A/S

S

Product Specification

■Fingerprint reader parts

Brand	SECUSTAR
Model	S-200
Sensor mode	Semiconductor sensor (Identification of inner skin fingerprint)
Authentication method	1:N(Less than 1sec)
Number of template	25 template ~ Max 99 template (Include 3 master)
False Acceptance Rate	0.0001
False Rejection Rate	0.001
Duration of Battery	1year 6months (Standard : 10access per day)

■ Surface parts

Material	Zinc ally, P.C(Poly carbone)
Color	Silver and others(Buyer's option)
Size	84mm×126mm×26mm
Power	AA SIZE×4, For emergency DC9V battery)

■ Operable Environment

Temperature	-15℃~80℃
Humidity	10~80%

P Q G

ITEM	FINGERPRINT IDENTIFICATION DOOR LOCK
BRAND	SECUSTAR
MODEL	S-200
DATE OF PURCHASE	200 . .
CUSTOMER	
TEL (CUS)	
ADDRESS (CUS)	
TEL (AGENT)	
ADDRESS (AGENT)	
NAME OF THE PERSON OF IN CHARGE	

※Warranty period : 1Year from the date of purchase

Ditto Information Technology Inc.

- -

※When you ask A/S, please present Product quality guarantee with registered purchase date to sufficient service.

※Please contact the agent which you buy this item, when you have any trouble or inconvenience.

※Please keep this document with manual because this is needed when you ask A/S. This document will not draw again.

CASE		COMPENSATION	
		UNDER WARRANTY	AFTER WARRANTY
Normal use	When trouble happens within 1year after establishment	Free repair	
	When trouble happens two times which caused by same defect	Free repair	Repair with charge
	When trouble happens over three times which caused by same defect	Exchange of product	Repair with charge
	In case there is no part for replacement	Exchange of product	Exchange of product
Abnormal use	Fault of consumer	Repair with charge	Repair with charge
	In case consumer use it other purpose	Repair with charge	Repair with charge
	Exchange of consumption goods (ex : battery)	Repair with charge	Repair with charge
	Trouble or damage caused by intention	Repair with charge	Repair with charge
Trouble of damage caused by natural calamity		Repair with charge	Repair with charge

MEMO

User list			
Name	ID	Fingerprint	Remark

[Registration]

① First(Master)Fingerprint(F/P) Registration

Power On→ENTER→Finger Print Input
(ID Confirm) (Three Times)

② Master's Registration

Reg. Button→Master Verify→ENTER→FingerPrint Input
(Long) (ID Confirm) (Three Times)

③ User's Registration

Reg. Button→Master Verify→ENTER→ENTER→Fingerprint Input
(Short) (ID Confirm)(F/P Reg.) (Three Times)

④ Password(P/W) Registration

Reg. Button→Master Verify→ENTER→NUM→Password Input
(Short) (ID Confirm)(P/W Reg.)(3~9 Characters)

[Deletion]

① Individualization Deletion(F/P And P/W)

Deletion Button→Master Verify→NUM→ENTER(Delete Completion)
(Short) (ID Selection)

② All Deletion(System Initialization)

Deletion Button→Master Verify→Delete Completion
(Long)

[Modification]

Deletion→Registration Process

[Registration]

① First(Master)Fingerprint(F/P) Registration

Power On→ENTER→Finger Print Input
(ID Confirm) (Three Times)

② Master's Registration

Reg. Button→Master Verify→ENTER→FingerPrint Input
(Long) (ID Confirm) (Three Times)

③ User's Registration

Reg. Button→Master Verify→ENTER→ENTER→Fingerprint Input
(Short) (ID Confirm)(F/P Reg.) (Three Times)

④ Password(P/W) Registration

Reg. Button→Master Verify→ENTER→NUM→Password Input
(Short) (ID Confirm)(P/W Reg.)(3~9 Characters)

[Deletion]

① Individualization Deletion(F/P And P/W)

Deletion Button→Master Verify→NUM→ENTER(Delete Completion)
(Short) (ID Selection)

② All Deletion(System Initialization)

Deletion Button→Master Verify→Delete Completion
(Long)

[Modification]

Deletion→Registration Process

[Registration]

① First(Master)Fingerprint(F/P) Registration

Power On→ENTER→Finger Print Input
(ID Confirm) (Three Times)

② Master's Registration

Reg. Button→Master Verify→ENTER→FingerPrint Input
(Long) (ID Confirm) (Three Times)

③ User's Registration

Reg. Button→Master Verify→ENTER→ENTER→Fingerprint Input
(Short) (ID Confirm)(F/P Reg.) (Three Times)

④ Password(P/W) Registration

Reg. Button→Master Verify→ENTER→NUM→Password Input
(Short) (ID Confirm)(P/W Reg.)(3~9 Characters)

[Deletion]

① Individualization Deletion(F/P And P/W)

Deletion Button→Master Verify→NUM→ENTER(Delete Completion)
(Short) (ID Selection)

② All Deletion(System Initialization)

Deletion Button→Master Verify→Delete Completion
(Long)

[Modification]

Deletion→Registration Process

[Registration]

① First(Master)Fingerprint(F/P) Registration

Power On→ENTER→Finger Print Input
(ID Confirm) (Three Times)

② Master's Registration

Reg. Button→Master Verify→ENTER→FingerPrint Input
(Long) (ID Confirm) (Three Times)

③ User's Registration

Reg. Button→Master Verify→ENTER→ENTER→Fingerprint Input
(Short) (ID Confirm)(F/P Reg.) (Three Times)

④ Password(P/W) Registration

Reg. Button→Master Verify→ENTER→NUM→Password Input
(Short) (ID Confirm)(P/W Reg.)(3~9 Characters)

[Deletion]

① Individualization Deletion(F/P And P/W)

Deletion Button→Master Verify→NUM→ENTER(Delete Completion)
(Short) (ID Selection)

② All Deletion(System Initialization)

Deletion Button→Master Verify→Delete Completion
(Long)

[Modification]

Deletion→Registration Process