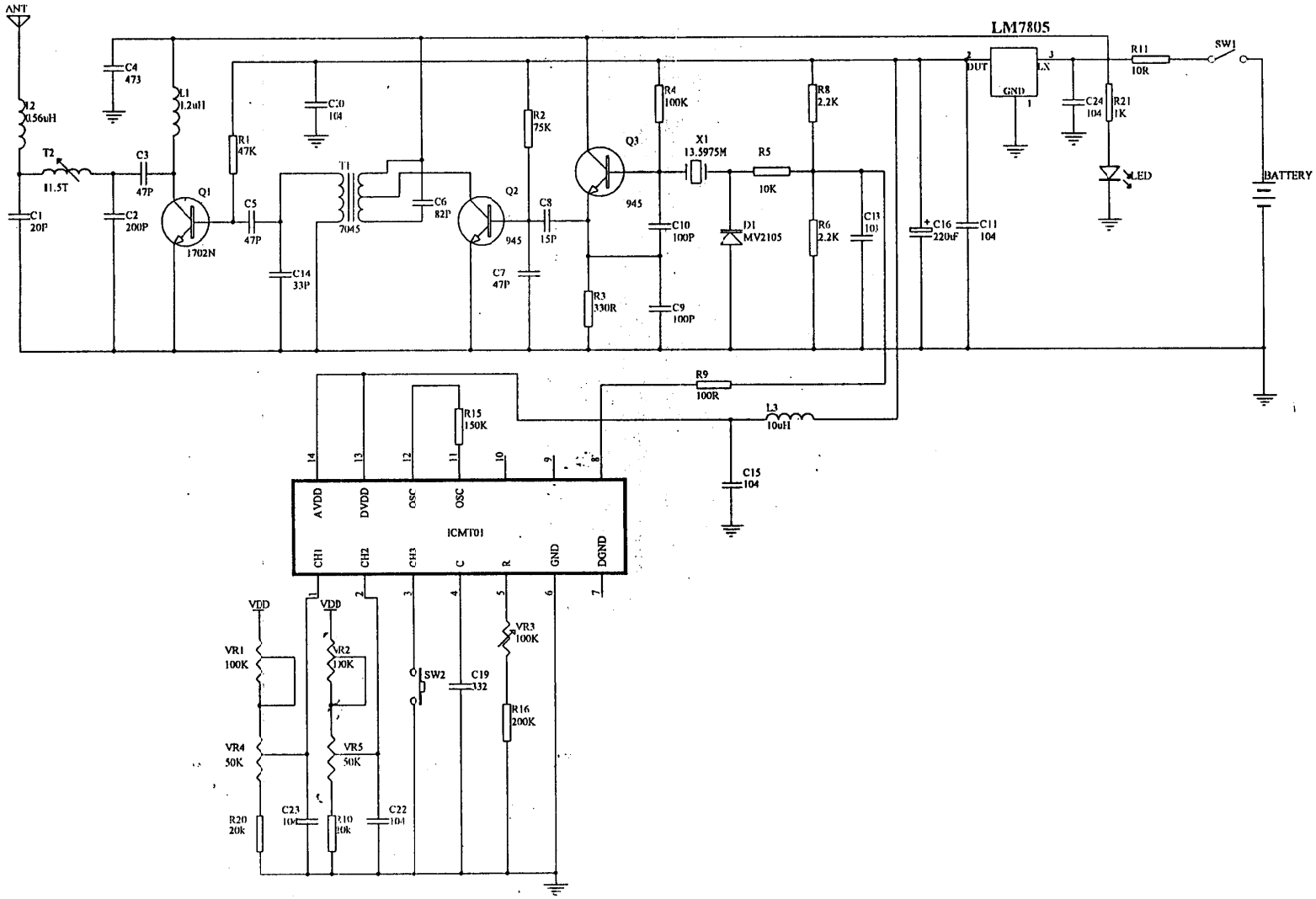Helicopter Transmiting Circuit