RadioRouter® Base Station Installation Guide

Issue Date: 08-04-2003
Version 0.5

Flarion Technologies, Inc.
Bedminster One
135 Route 202/206 South
Bedminster, NJ 07921
Tel (908) 947 7000
Fax (908) 947 2050
Web: info@flarion.com

Intentionally blank page

COPYRIGHT STATEMENT

Copyright© 2003 Flarion Technologies, Inc. All rights reserved. Flarion™, flash-OFDM™, RadioRouter®, Vector-LDPC™ and FlashView™ are trademarks of Flarion Technologies, Inc. All other trademarks contained herein are the property of their respective owners. Data subject to change without notice. Printed in USA. FTDS-200 013003

NOTICE:

Regulatory Compliance Information

The Flarion RadioRouter complies with the following regulatory compliance requirements:

- **Safety**
  - UL 60950 — Underwriters Laboratories, Inc.
  - CAN/CSA -C22.2 No. 60950 — Canadian Standards Association
  - EN 60950 — European Norm
  - IEC 60950 — International Electrotechnical Commission
- **EMC — Electromagnetic Compatibility**
  - FCC Part 15 (CFR 47) Class A — Federal Communications Commission, Code of Federal Regulations
  - ICES-003 Class A — Interference-Causing Equipment Standard
  - EN55022 Class A
  - CISPR22 Class A
- **Telecom**
  - FCC Part 24
- **Industry/Environmental**
  - GR-63-CORE NEBS Level 3 — Network Equipment Building System
  - GR-1089-CORE NEBS Level 3
  - ETSI EN 300 019-2-3 V2.1.2 — European Telecommunications Standards Institute

FCC Class A Statement

This equipment has been tested and found to comply with the limits for a Class A digital device, pursuant to Part 15 of the FCC rules. These limits are designed to provide reasonable protection against harmful interference when the equipment is operated in a commercial environment. This equipment generates, uses, and can radiate radio frequency energy and, if not installed and used in accordance with the instruction manual, may cause harmful interference to radio communications. Operation of this equipment in a residential area is likely to cause harmful interference in which case the user will be required to correct the interference at his own expense. (CFR reference 15.105)

Modifying the equipment with out Flarion's authorization may result in the equipment no longer complying with FCC requirements for Class A digital device. In that event, your right to use the equipment may be limited by FCC regulations, and you may be required to correct any interference to radio or television communications at your own expense. (CFR reference 15.21)

Canadian Class A Statement

This Class 'A' digital apparatus complies with Canadian ICES-003.

Cet appareil numerique de la classe 'A' est conforme á la norme NMB-003 de Canada.

HOW TO USE THIS MANUAL

This manual is intended for use by qualified engineering personnel only. The RadioRouter Base Station Installation Guide covers all of the necessary information required to install the RadioRouter Base Station. It contains the following sections:

- Overview
- Verifying the Site Preparation
- Installing the Cabinet
- Connecting the Power System
- Connecting the Core Network Cables
- Connecting the Antennas Cables
- Installing the Alarm Connections
- Powering Up the RadioRouter
- Powering Down the RadioRouter
- Verifying the Installation

A list of abbreviations used in this manual can be found at the beginning of the document in the **LIST OF ABBREVIATIONS** section.

There is certain critical information contained within this manual that MUST be adhered to. Failure to observe this information can result in death or serious injury. Such information is marked as follows:

WARNING:

WARNINGS ARE ALWAYS IN UPPER CASE. WARNINGS RELATE TO POTENTIAL LOSS OF LIFE OR SERIOUS INJURY. YOU MUST OBEY ALL WARNINGS.

CAUTION:

Normal Cautions are in bold type. Cautions relate to potential damage to equipment. You must obey all cautions.

ESD CAUTION:

This is an ESD caution. This is signified by the electrostatic symbol which appears to the left of the caution information.

Note:

Notes are displayed in italic. Notes contain certain information that may be valuable to the reader.

TABLE OF CONTENTS

1. Overview ..... Page 1
2. Verifying the Site Preparation ..... Page 3
   2.1. Site Preparation Checklist — Indoor BaseStation ..... Page 3
   2.2. Preparing the Floor ..... Page 4
3. Installing the Cabinet ..... Page 6
4. Connecting the Power System ..... Page 11
   4.1. Routing the Cables ..... Page 11
   4.2. Connecting to Power and Ground ..... Page 16
5. Connecting the Core Network Cables ..... Page 21
6. Connecting the Antennas Cables ..... Page 26
7. Installing the Alarm Connections ..... Page 30
8. Powering Up the Cabinet ..... Page 32
9. Powering Down the Cabinet ..... Page 36
10. Verifying the Installation ..... Page 37
   10.1. Verifying the Physical Installation ..... Page 37
   10.2. Verifying the Base Station Operation ..... Page 37

LIST OF PROCEDURES

Procedure 3-1 Removing the Cabinet from the Pallet ..... Page 6
Procedure 3-2 Lifting the Cabinet ..... Page 9
Procedure 3-3 Mounting the Cabinet to the Floor ..... Page 10
Procedure 4-1 Routing Cables Through the Cable Entry Port ..... Page 12
Procedure 4-2 Connecting the Power Cables ..... Page 18
Procedure 4-3 Connecting the Ground Cables ..... Page 19
Procedure 5-1 Connecting to the Network via T1 ..... Page 21
Procedure 5-2 Connecting to the Network via Ethernet ..... Page 24
Procedure 6-1 Connecting the Antenna Cables ..... Page 29
Procedure 8-1 Powering Up the Cabinet ..... Page 33
Procedure 9-1 Powering Down the Cabinet ..... Page 36
Procedure 10-1 Communicating with the Core Network ..... Page 37

LIST OF TABLES

Table 8.1 Power On Expected LEDs ..... Page 35

LIST OF FIGURES

Figure 1.1 Flat Equipment Dolly....Page 2
Figure 2.1 Clearance Holes in RadioRouter Base — Schematic View....Page 4
Figure 2.2 Clearance Holes in RadioRouter Base....Page 5
Figure 3.1 Side Brace and Screws....Page 7
Figure 3.2 Cabinet-to-Pallet Mounting Screws....Page 8
Figure 3.3 Top of Cabinet with Panels Removed....Page 9
Figure 4.1 Cable Access Plate on Top of Cabinet....Page 11
Figure 4.2 Cable Entry Port....Page 12
Figure 4.3 Channel Cover with Mounting Screw....Page 13
Figure 4.4 Cable Routed in Channel....Page 14
Figure 4.5 Cable Routed Through Structure....Page 15
Figure 4.6 Access to Power Connections — Front View....Page 16
Figure 4.7 Power Connections Viewed from inside the Cabinet....Page 17
Figure 4.8 Schematic View of Power Connections....Page 17
Figure 4.9 Cabinet with Ground Bus Bar — Rear View....Page 19
Figure 4.10 Ground Bus Bar....Page 20
Figure 5.1 Cabinet with T1 Connectors — Rear View....Page 21
Figure 5.2 DSX Cables in T1 Connectors....Page 22
Figure 5.3 DSX Cables Removed from T1 Connectors....Page 23
Figure 5.4 Cabinet with Ethernet Connection — Front View....Page 24
Figure 5.5 Route of Ethernet Cable — Front View....Page 25
Figure 6.1 Top of Cabinet with Cable Access Plate Removed....Page 26
Figure 6.2 Antenna Connectors — Rear View....Page 28
Figure 6.3 Antenna Connectors Schematic — Rear View....Page 28
Figure 6.4 Top of Cabinet with Two Antenna Cables Installed....Page 29
Figure 7.1 Cabinet with Alarm Connection — Rear View....Page 31
Figure 7.2 Alarm Connector....Page 31
Figure 8.1 Distribution Panel with Circuit Breakers — Front View....Page 33
Figure 8.2 Circuit Breakers — Front View....Page 34

APPENDICES

Appendix A RadioRouter BaseStation Site Preparation Punchlist....Page A -1
Appendix B RadioRouter BaseStation Installation Punchlist....Page B -1

LIST OF ABBREVIATIONS

DSX ..... Digital Signal Cross-Connect
LNA ..... Low Noise Amplifier
MCU ..... Master Control Unit
PA ..... Power Amplifier
PCU ..... Power Conditioning Unit
RRC ..... Radio Router Chassis

Intentionally blank page

Chapter 1. Overview

The RadioRouter BaseStation Installation Guide covers all of the necessary information required to physically install the RadioRouter BaseStation hardware. This guide assumes that a suitable site has already been prepared. A checklist is provided to assess the site prior to installation.

Once the physical installation is complete, the RadioRouter BaseStation can be configured and commissioned. Instructions for the configuration process can be found in the RadioRouter BaseStation Commissioning Guide.

The RadioRouter BaseStation has the following physical characteristics:

- Standard EIA 19 inch rack mount
- 38 U of electronics mounting height
- 71”H X 24”W X 26.5”D with door and back panel installed
- 71”H X 24”W X 24.5”D without door and back panel installed
- 631 lb with door and back panel installed
- 559 lb without door and back panel installed
- Inherent forced air cooling
- Front access only required for maintenance
- Welded steel construction
- Antenna cable connectors on top 7/16” DIN female
- Power cable and T1 entry from top
- Color: Antique Ivory

WARNING:

THE RADIOROUTER BASESTATION INDOOR CABINET WEIGHS APPROXIMATELY 650 LB AND IS TOP HEAVY. CARE MUST BE TAKEN TO HANDLE THE CABINET PROPERLY WITHOUT DANGER TO THE INSTALLATION PERSONNEL OR OTHER NEARBY EQUIPMENT.

IT IS THE RESPONSIBILITY OF THE INSTALLER TO ENSURE THAT ALL LOCAL, STATE, AND FEDERAL SAFETY REQUIREMENTS ARE FOLLOWED.

ESD CAUTION:

It is the responsibility of the installer to ensure that all necessary precautions are taken to avoid electrostatic discharge damage to the equipment.

Note:

All installation work must be coordinated with the carrier to insure compliance with carrier requirements regarding scheduling work during maintenance windows.

In addition to standard installation tools, it is recommended that special equipment be used to move the RadioRouter cabinet. The following list gives examples of equipment which can be used:

- Pallet jack with 27” width across the jacks. Pallet jack 4YX97 from Dayton or equivalent.
- A 36” L x 24” W x 5.5” H flat equipment dolly. McMaster Carr part number 2730T6 or equivalent. See *Figure 1.1 Flat Equipment Dolly*
- Hoist or crane with heavy duty structural straps — 1000 lb load capability

Figure 1.1 Flat Equipment Dolly

Chapter 2. Verifying the Site Preparation

Before you begin the physical installation of the RadioRouter BaseStation, confirm that the site preparation is complete. The checklist that follows identifies all items that must be in place before the installation can begin. If any items are incomplete or missing, fill out the Punchlist in *Appendix A - RadioRouter BaseStation Site Preparation Punchlist*.

2.1. Site Preparation Checklist — Indoor BaseStation

- **Floor Plan**
  - Sketch of site indicating location of all equipment to be installed including base station cabinet and cables.
- **Environment**
  - Enclosed space with functional HVAC
  - Floor plan allows adequate space for cabinet — at least 24” front and 6” rear
- **Electrical system**
  - Load center, transfer switch, electrical outlets, and feeds for rectifiers available
  - Internal ground halo and master ground bar available
- **Antenna plant**
  - Surge arrestor mounting available
  - Six Tx/Rx antenna line surge protectors installed on surge arrestor mounting
- **T1 connection**
  - T1 surge arrestor installed
  - Surge arrestor grounded and ready to be connected to T1 network termination
- **Alarm connection**
  - One AC power failure alarm termination point — AMP 554954–2 connector
  - One high temperature alarm termination point — AMP 554954–2 connector
- **Cable Support**
  - Trays or other support mechanisms for cables available
- **Cables**
  - DC power cabling: #6 AWG THHN or THWN
  - Ground cabling to master ground bar: #6 AWG THHN or THWN
  - RF cabling to surge arrestors: Andrews 1/2” SuperFlex jumpers or equivalent
  - T1 cabling: 2–pair shielded
  - Alarm sensor cables

2.2. Preparing the Floor

Before the cabinet can be placed into position, mounting holes must be drilled into the floor. There are a total of 8 clearance holes in the base of the cabinet — 2 in each corner. *Figure 2.1 Clearance Holes in RadioRouter Base — Schematic View* shows the positioning of the holes.

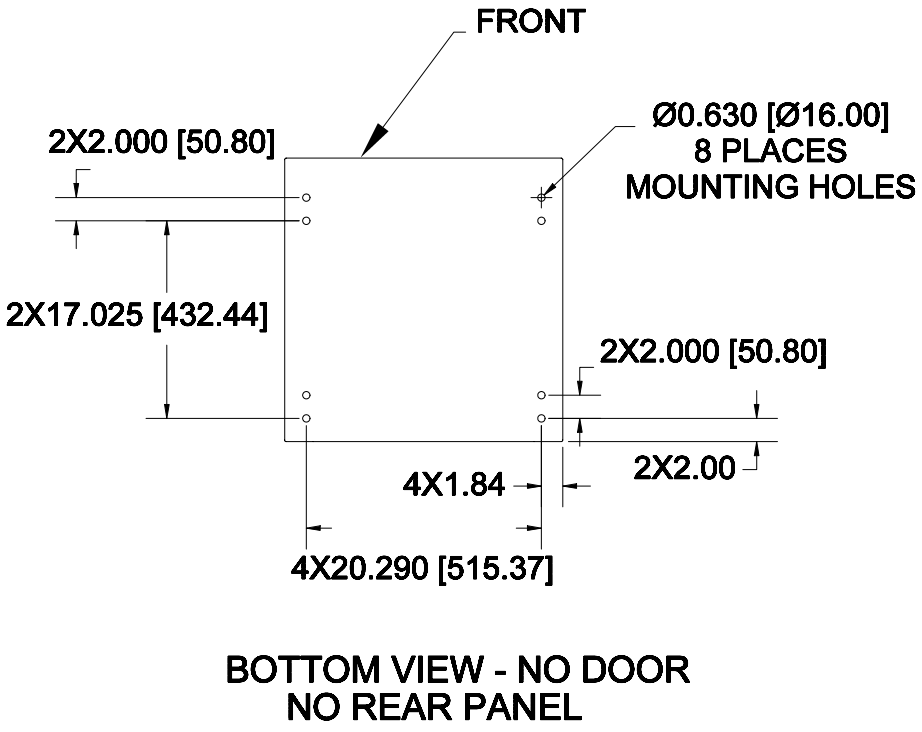

Figure 2.1 Clearance Holes in RadioRouter Base — Schematic View

Figure 2.2 Clearance Holes in RadioRouter Base shows the holes as viewed from inside the front corner of the cabinet.

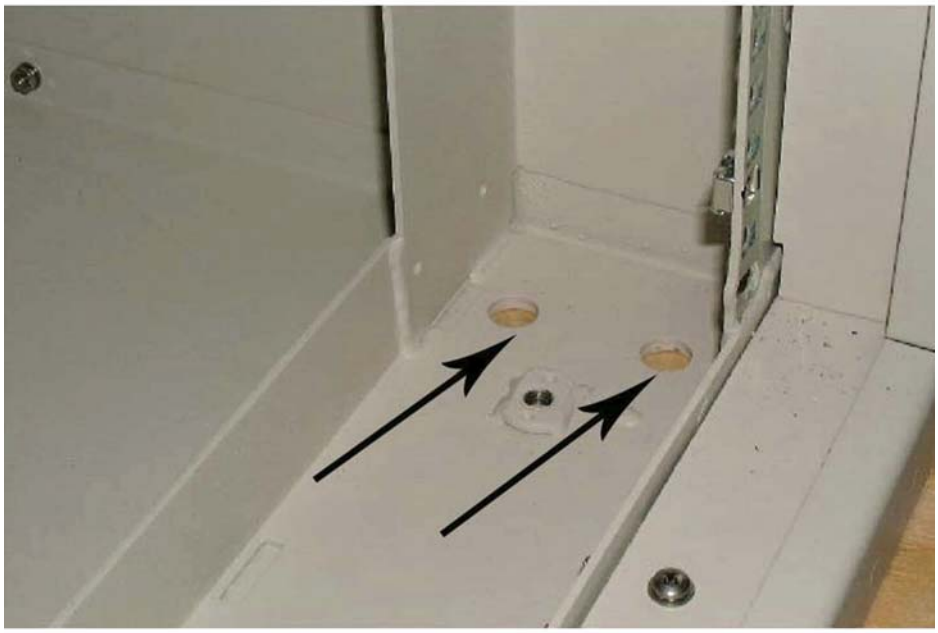

Figure 2.2 Clearance Holes in RadioRouter Base

Only one hole per corner is required to mount the cabinet. All holes must have threads to accommodate 1/2” diameter bolts with flat washers, 1” minimum length.

Chapter 3. Installing the Cabinet

The RadioRouter BaseStation cabinet is shipped completely assembled, shrouded in cardboard, and mounted on a shipping pallet. The pallet is 35” L x 30” W x 6.75” H.

WARNING:

THE RADIOROUTER BASESTATION INDOOR CABINET WEIGHS APPROXIMATELY 650 LB. AND IS TOP HEAVY. CARE MUST BE TAKEN TO HANDLE THE CABINET PROPERLY WITHOUT DANGER TO THE INSTALLATION PERSONNEL OR OTHER NEARBY EQUIPMENT.

Equipment that can be used to move the base station is described in *Chapter 1. Overview*.

Procedure 3-1 Removing the Cabinet from the Pallet

When this procedure is completed, the cabinet will be free to move directly into place. Alternatively, the cabinet can be placed onto a flat dolly to facilitate moving the cabinet through narrow equipment aisles. See *Figure 1.1 Flat Equipment Dolly*.

1. Remove the cardboard shroud and discard.

2. Inspect the cabinet for damage. If there is any damage, fill out the Punchlist in *Appendix B - RadioRouter BaseStation Installation Punchlist*. If the damage is minor and does not prevent continuation of the installation procedures, continue with the installation. If the damage prevents continuation of the installation, contact the Project Manager for instructions.

3. Locate the side support braces from the pallet. See *Figure 3.1 Side Brace and Screws*. Unscrew the braces and remove them.

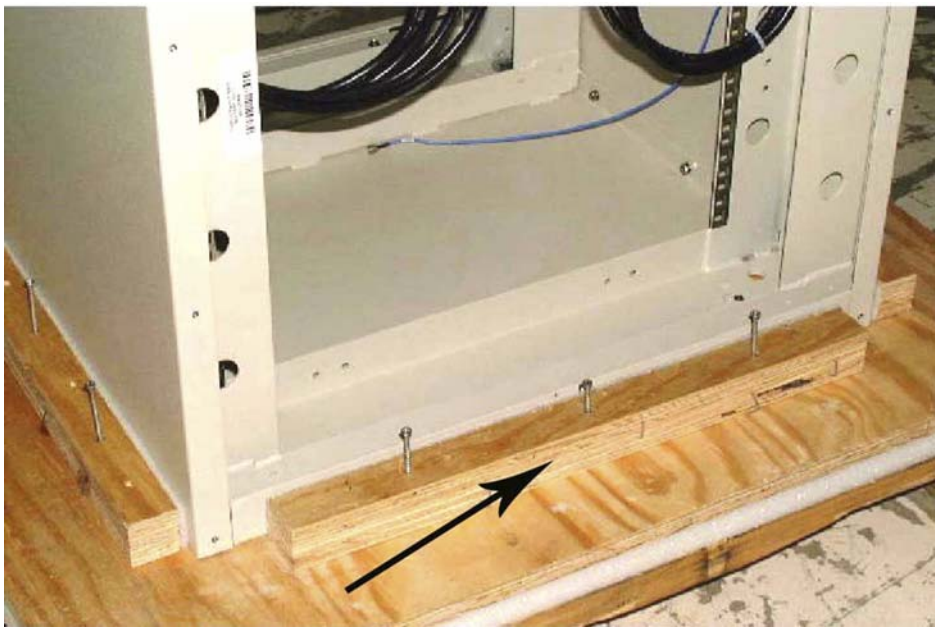

Figure 3.1 Side Brace and Screws

4. Open the front door of the cabinet. Lift the door upwards and remove the door from its hinges.

5. Unfasten all the screws on the rear panel and remove the panel.

Note:

Reinstallation of the rear panel is optional. However, if the rear panel is to be reinstalled and there is not sufficient rear clearance to reinstall the panel in place, the panel must be reinstalled prior to final positioning of the cabinet.

6. Unscrew the 8 screws on the bottom front access panel. Remove the panel.

7. Unscrew the cabinet-to-pallet mounting screws. These are located on the inside corners of the cabinet. See *Figure 3.2 Cabinet-to-Pallet Mounting Screws*.

Figure 3.2 Cabinet-to-Pallet Mounting Screws

Procedure 3-2 Lifting the Cabinet

Once the cabinet is near its final position, it can be moved into place. It is recommended that the cabinet be lifted by a hoist or crane using heavy duty structural straps with 1000 lb load capability.

Note:

Before lifting the cabinet into place, make sure all necessary holes have been drilled. See Section 2.2. Preparing the Floor. Make sure the back panel and front door have been removed.

1. Remove the 1U blank panel at the top of the cabinet.

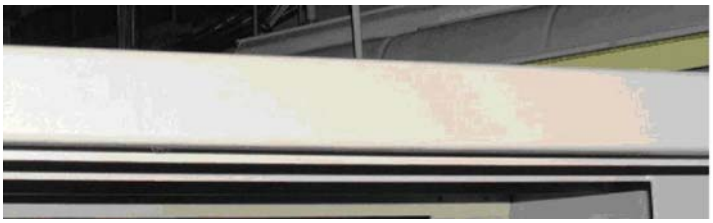

Figure 3.3 Top of Cabinet with Panels Removed

2. Route the structural straps through the top of the cabinet from front to back.

3. Lift the cabinet into place.

4. Replace the 1U blank panel at the top of the cabinet.

Procedure 3-3 Mounting the Cabinet to the Floor

Once the cabinet has been moved to its final location, it must be bolted to the floor.

Note:

If the rear panel is to be reinstalled and there is not sufficient rear clearance to reinstall the panel in place, the panel must be reinstalled prior to mounting the cabinet.

1. Align the clearance holes in the base of the cabinet to the threaded holes in the floor. Although there are two clearance holes in each corner, only one is necessary for mounting.
2. Screw the cabinet to the floor using 1/2” diameter screws and flat washers.
3. Tighten the screws to 400 in-lb +/- 25 in-lb.
4. Replace the front access panel after all cables have been routed and connected.

Chapter 4. Connecting the Power System

The RadioRouter BaseStation Indoor Cabinet requires a connection to DC power. This chapter contains procedures for routing the power cables and connecting to power and ground.

WARNING:

WHEN PERFORMING ANY TASKS INVOLVING THE POWER SYSTEMS, MAKE SURE THAT THE POWER IS NOT LIVE. ALL POWER OPERATIONS SHOULD BE PERFORMED BY QUALIFIED PERSONNEL ONLY.

4.1. Routing the Cables

Cables are routed from the top of the cabinet either through the cable access opening or through one of the cable entry ports.

The cable access opening is located across the top of the cabinet as shown in *Figure 4.1 Cable Access Plate on Top of Cabinet*.

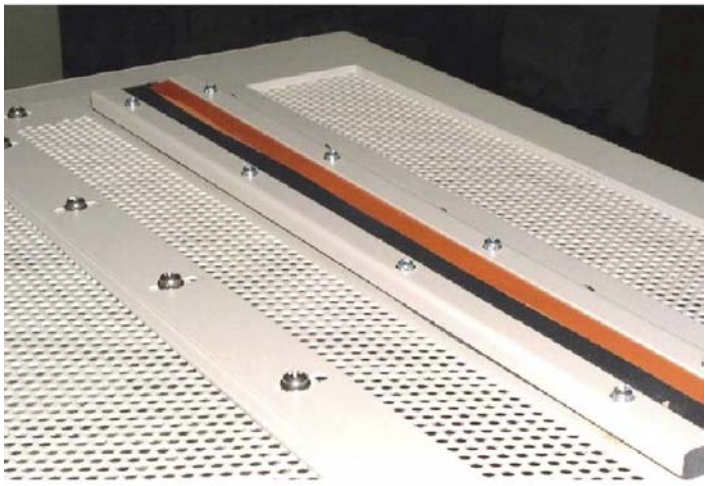

Figure 4.1 Cable Access Plate on Top of Cabinet

Procedure 4-1 Routing Cables Through the Cable Entry Port

There are two cable entry ports located in the top front corners as shown in *Figure 4.2 Cable Entry Port*.

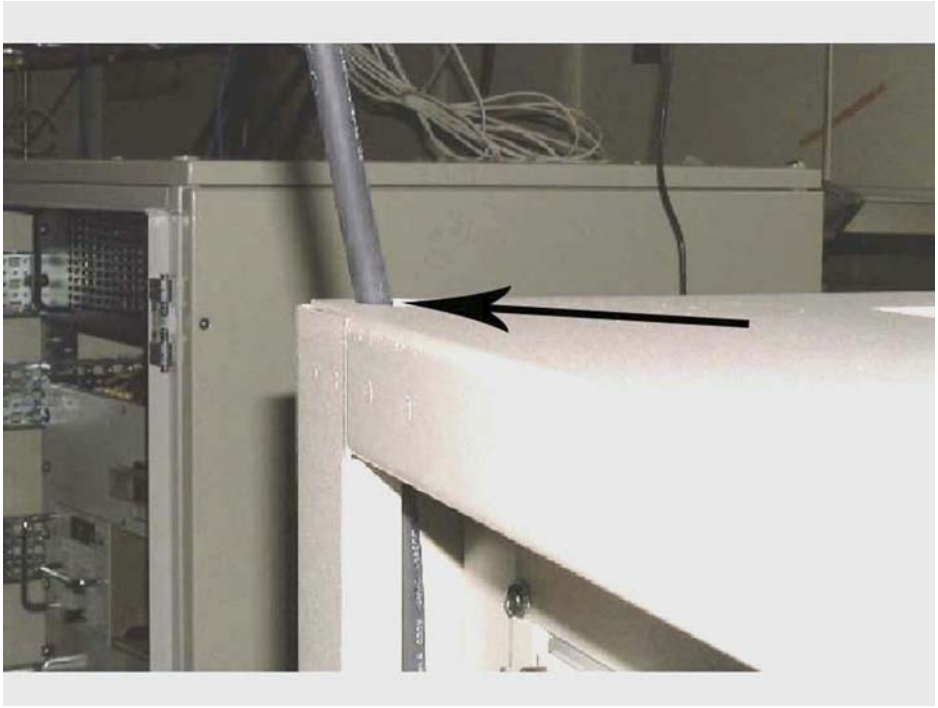

Figure 4.2 Cable Entry Port

1. To route a cable through a cable entry hole, the cable channel covers must be removed. *Figure 4.3 Channel Cover with Mounting Screw* shows the cable channel cover in place. Remove all three mounting screws and remove the channel cover.

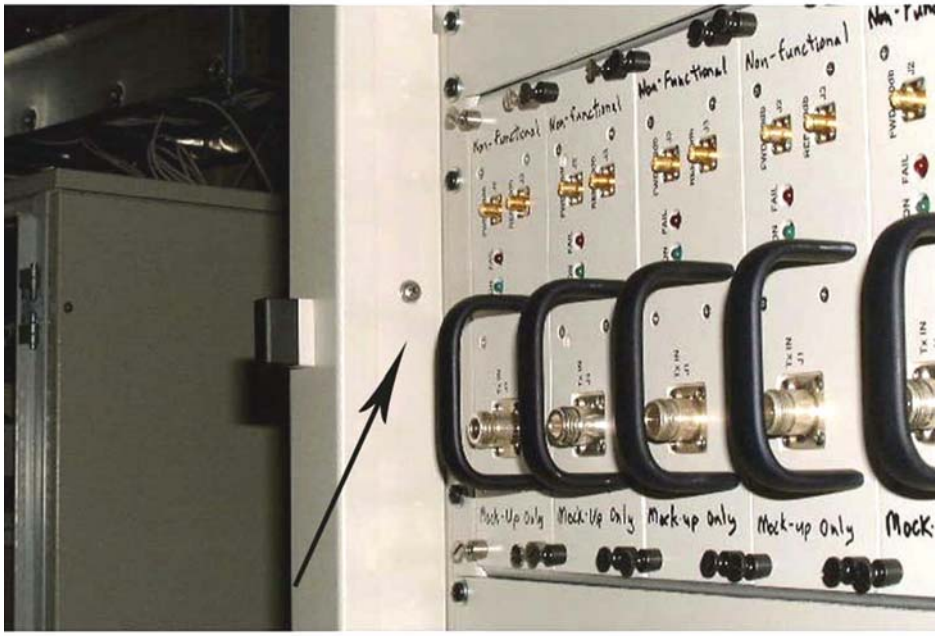

Figure 4.3 Channel Cover with Mounting Screw

2. Route the cable through the channel to the lower portion of the cabinet.

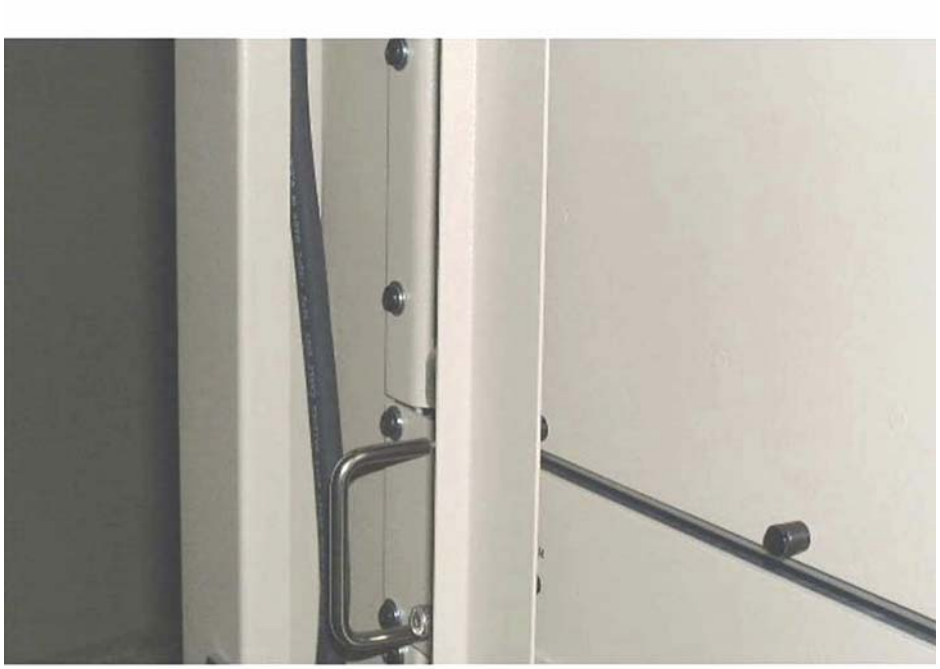

Figure 4.4 Cable Routed in Channel

3. Route the cable through the holes in the cabinet structure to access the connection point.

Figure 4.5 Cable Routed Through Structure

4. When all cables have been routed, reinstall the channel covers.

4.2. Connecting to Power and Ground

The power distribution panel with the power connections are located at the bottom of the cabinet. The power distribution panel contains circuit breakers and is visible from the front. The connections are at the bottom of the panel. To reach them, remove the front access panel.

Figure 4.6 Access to Power Connections — Front View

Once the front panel is removed, the connections are visible from underneath.

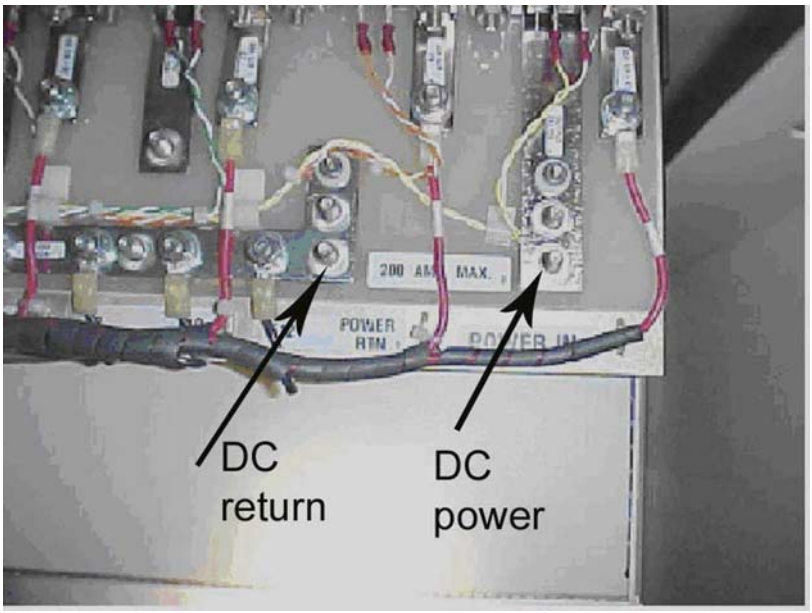

Figure 4.7 Power Connections Viewed from inside the Cabinet

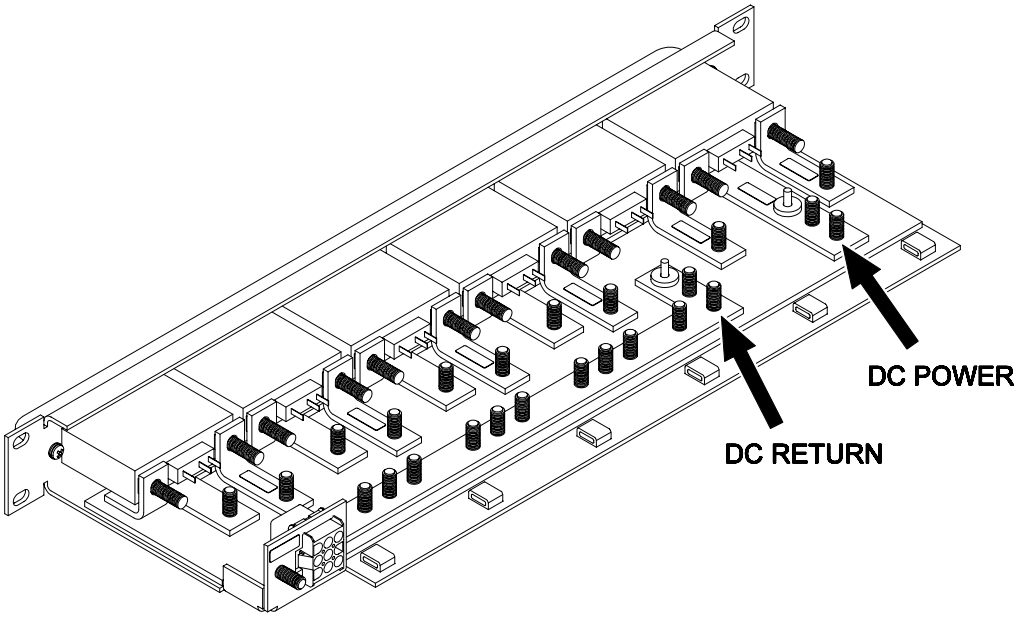

Figure 4.8 Schematic View of Power Connections

Procedure 4-2 Connecting the Power Cables

WARNING:

WHEN PERFORMING ANY TASKS INVOLVING THE POWER SYSTEMS, MAKE SURE THAT THE POWER IS NOT LIVE. ALL POWER OPERATIONS SHOULD BE PERFORMED BY QUALIFIED PERSONNEL ONLY.

1. Locate the DC power connection point and the DC return connection point. See *Figure 4.7 Power Connections Viewed from inside the Cabinet* and *Figure 4.8 Schematic View of Power Connections*.

2. Connect the power cable to the connectors with 6 AWG wire with a 2–hole lug for a 1/4” diameter stud.

3. Fasten the lug on to the stud with the nuts provided. Tighten nuts to 40–50 in-lb torque.

4. Connect the other end of the cable to the DC power source.

Procedure 4-3 Connecting the Ground Cables

The cabinet must be connected to earth ground at the installation site.

CAUTION:

Failure to properly connect the cabinet to ground could result in permanent damage to the equipment.

1. Locate the ground bus bar. See *Figure 4.9 Cabinet with Ground Bus Bar — Rear View*.

Figure 4.9 Cabinet with Ground Bus Bar — Rear View

2. Connect the ground cable to the connectors with 6 AWG wire with a 2–hole lug for a 1/4” diameter stud. See*Figure 4.10 Ground Bus Bar*.

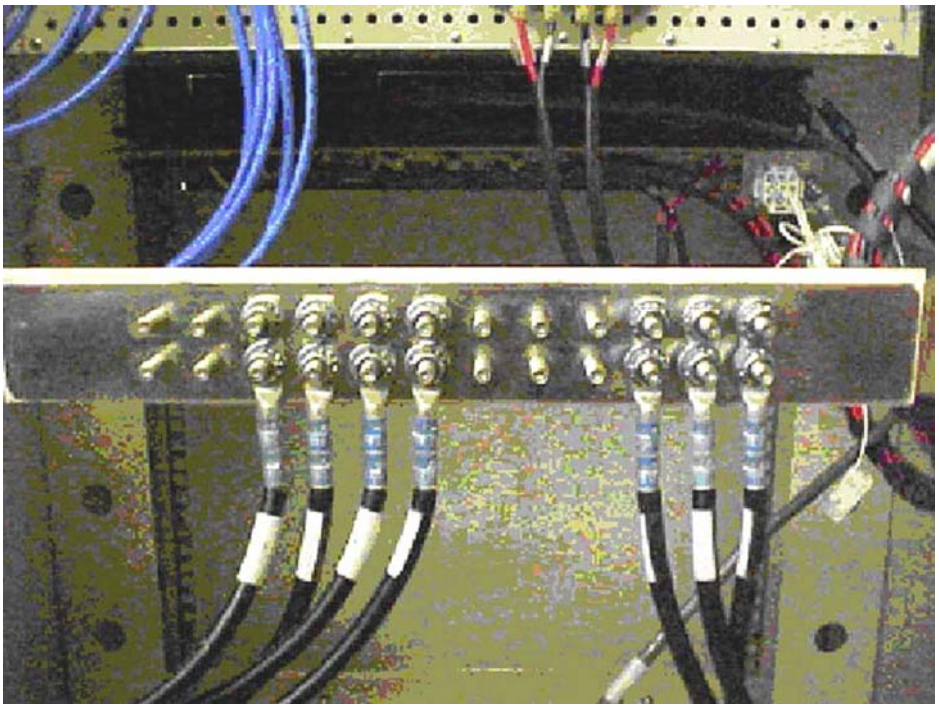

Figure 4.10 Ground Bus Bar

3. Fasten the lug on to the stud with the nuts provided. Tighten nuts to 40–50 in-lb torque.

4. Connect the other end of the cable to the Master Ground Bar or other suitable ground source available at the installation site.

Chapter 5. Connecting the Core Network Cables

The RadioRouter BaseStation can access the core network through either T1 or Ethernet connections. This section describes both methods.

Procedure 5-1 Connecting to the Network via T1

T1 connections are made using cables terminated in RJ-48 connectors.

1. Locate the T1 connectors on the rear of the cabinet.

Figure 5.1 Cabinet with T1 Connectors — Rear View

2. Remove the DSX cables from the connectors. *Figure 5.2 DSX Cables in T1 Connectors* shows the cables in the connectors. *Figure 5.3 DSX Cables Removed from T1 Connectors* shows the connectors with the cables removed.

Note:

Removing the DSX cables will disable the DSX-1 panel. The DSX cables must be reconnected to use the DSX-1 panel.

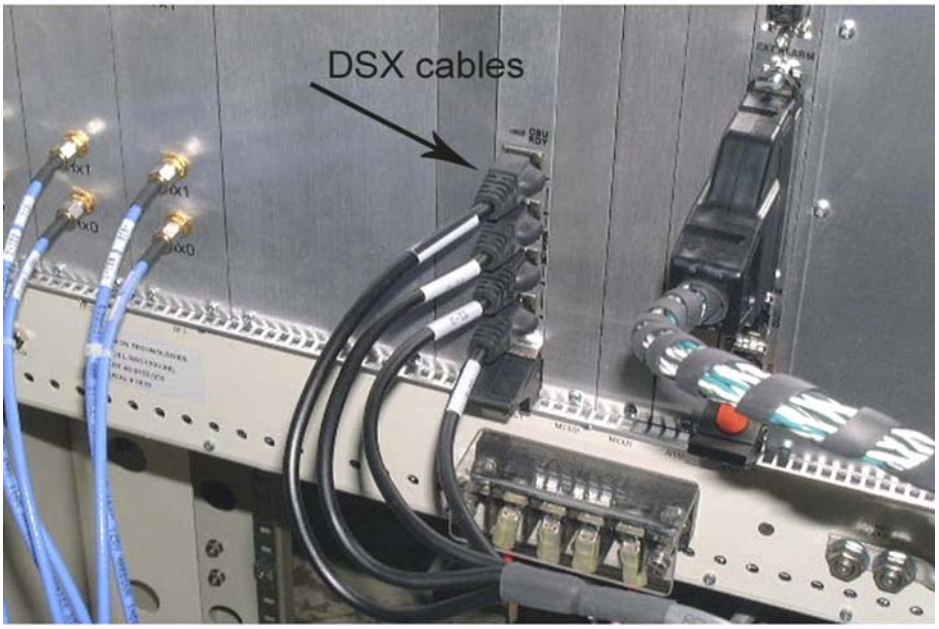

Figure 5.2 DSX Cables in T1 Connectors

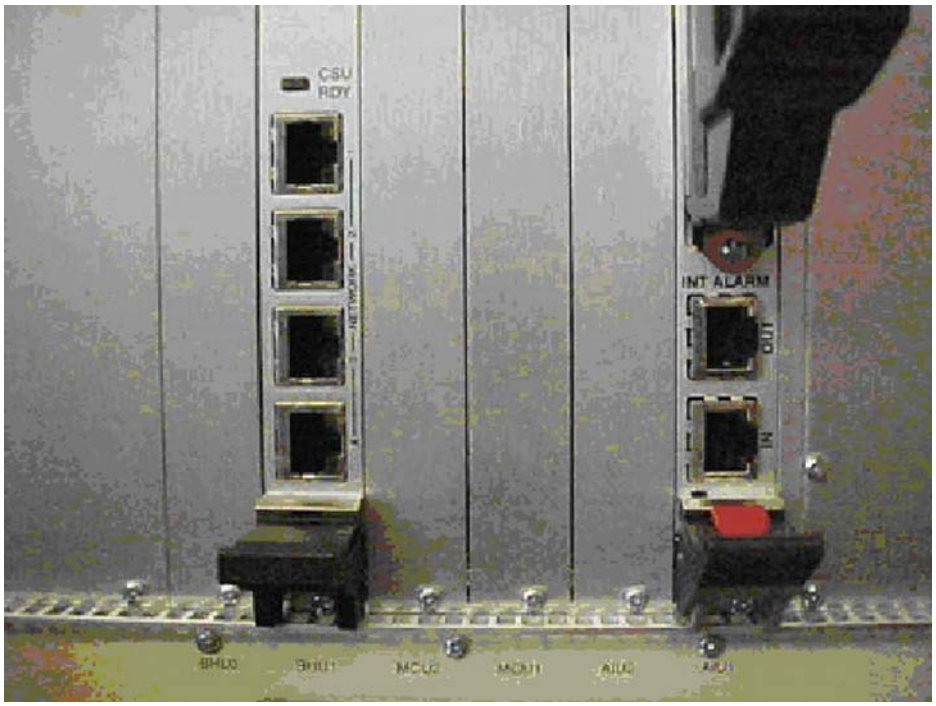

Figure 5.3 DSX Cables Removed from T1 Connectors

3. Insert the first RJ-48 plug into the top jack which is labeled 1.

4. Insert any additional plugs from the top down.

Procedure 5-2 Connecting to the Network via Ethernet

Ethernet connections are made using RJ-45 connectors. *Figure 5.4 Cabinet with Ethernet Connection — Front View* shows the location of the Ethernet connector on the front of the cabinet.

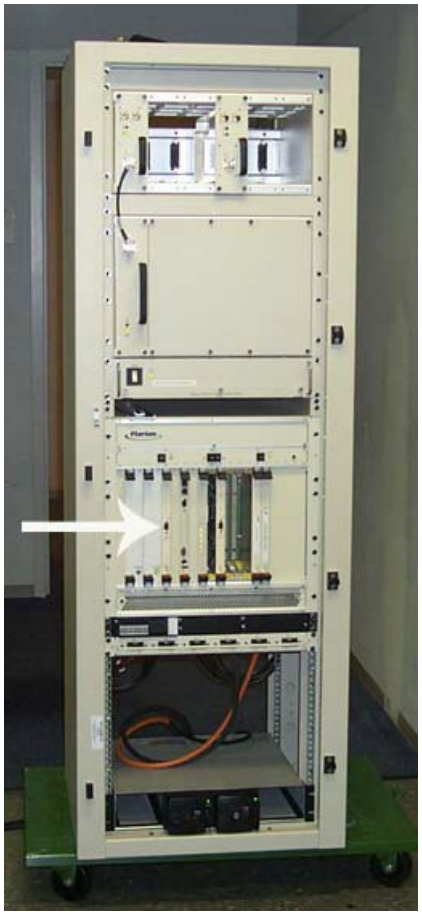

Figure 5.4 Cabinet with Ethernet Connection — Front View

Route the Ethernet cable to the side cable channel and up the channel through the cable entry port in the top of the cabinet as shown in *Figure 5.5 Route of Ethernet Cable — Front View*.

Figure 5.5 Route of Ethernet Cable — Front View

Chapter 6. Connecting the Antennas Cables

The antenna cables are connected through the cable access plate on the top of the cabinet. *Figure 4.1 Cable Access Plate on Top of Cabinet* shows the cable access plate in place.

Before connecting the cables, the cable access plate must be removed. This gives access to the cable mating connectors. See *Figure 6.1 Top of Cabinet with Cable Access Plate Removed*.

CAUTION:

All antenna operations should be performed by qualified personnel only. Installers must meet the requirements of FCC Bulletin OET 65 and coax terminations and have expertise working with RF coaxial cable. Care must be taken not to crimp or damage the cables.

Figure 6.1 Top of Cabinet with Cable Access Plate Removed

There are six Din Female connectors. From *right* to *left* they are:

1. Alpha sector Tx/Rx
2. Beta sector Tx/Rx
3. Gamma sector Tx/Rx
4. Alpha sector RX only
5. Beta sector Rx only
6. Gamma sector Rx only

The antenna cables that attach to the connectors should be clearly labeled with color-coded bands as follows:

1. Alpha sector Tx/Rx — 1 white band
2. Beta sector Tx/Rx — 1 blue band
3. Gamma sector Tx/Rx — 1 green band
4. Alpha sector RX only — 2 white bands
5. Beta sector Rx only — 2 blue bands
6. Gamma sector Rx only — 2 green bands

See *Figure 6.2 Antenna Connectors — Rear View* and *Figure 6.3 Antenna Connectors Schematic — Rear View*

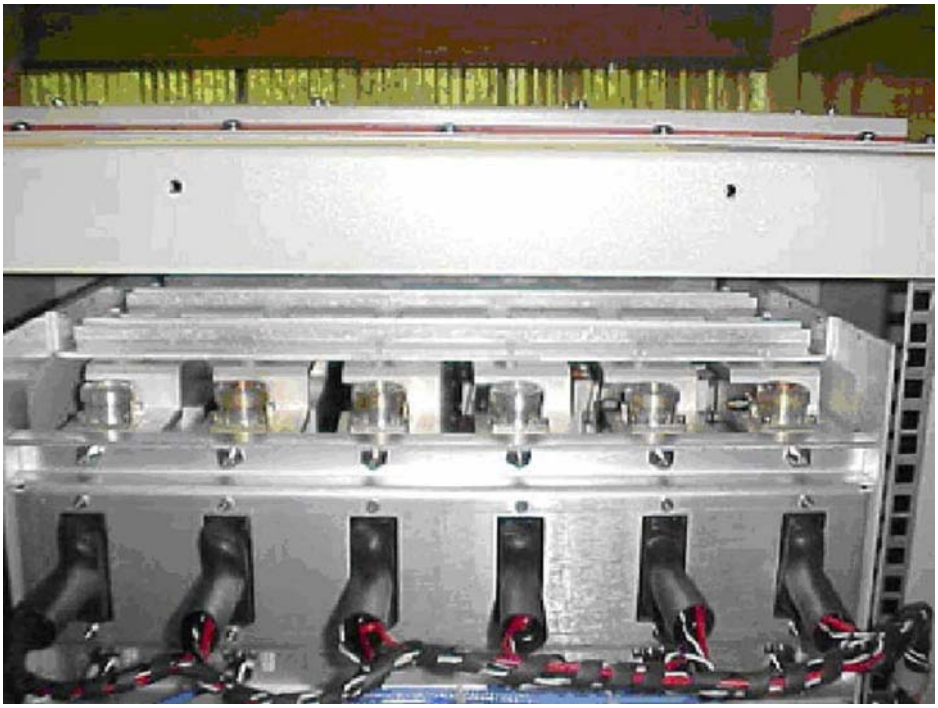

Figure 6.2 Antenna Connectors — Rear View

TOP REAR VIEW

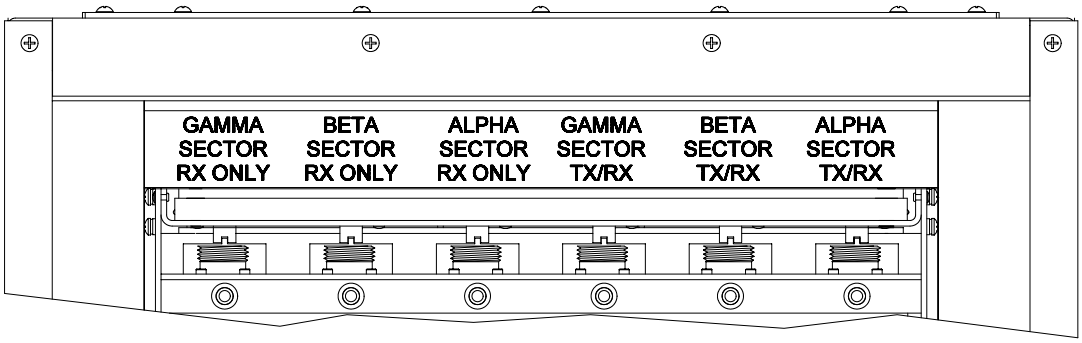

Figure 6.3 Antenna Connectors Schematic — Rear View

Procedure 6-1 Connecting the Antenna Cables

1. Route the antenna cable from the top and screw mount it to the mating connector. The connector nut is 1 1/4” hex (across flats).

2. Fully seat the connector and hand tighten with an appropriate tool. The connector may be tightened from either the rear or top.

3. Repeat Steps 1 and 2 for all antenna cables.

4. Reinstall the cable access panel. Make sure the rubber edging is tight against the cables. *Figure 6.4 Top of Cabinet with Two Antenna Cables Installed* shows two antenna cables installed.

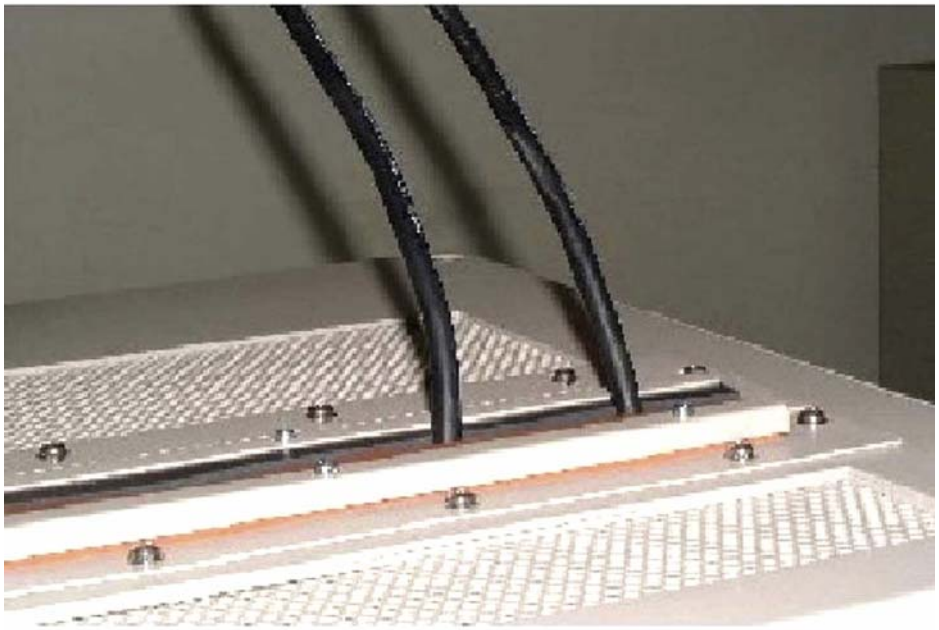

Figure 6.4 Top of Cabinet with Two Antenna Cables Installed

Chapter 7. Installing the Alarm Connections

Connection to the system alarm contacts is through a 50–pin AMP connector (part no. 55494–2). The connector is typically site specific depending on which alarms will be used in a given installation.

The alarm connector is located in the rear of the cabinet. See *Figure 7.1 Cabinet with Alarm Connection — Rear View* and *Figure 7.2 Alarm Connector*.

Figure 7.1 Cabinet with Alarm Connection — Rear View

Figure 7.2 Alarm Connector

Cables can be routed to the connector using the procedures described in *Section 4.1. Routing the Cables*.

Chapter 8. Powering Up the Cabinet

The cabinet requires DC power to operate. Before attempting to power up the cabinet, verify that DC power is available. It may be necessary to wait for a maintenance window to connect the cabinet to DC power and perform this procedure.

WARNING:

ALL POWER OPERATIONS SHOULD BE PERFORMED BY QUALIFIED PERSONNEL ONLY. BEFORE ATTEMPTING TO POWER UP THE SYSTEM, CONFIRM THAT ALL POWER CONNECTIONS HAVE BEEN MADE PROPERLY.

CAUTION:

After the RadioRouter BaseStation is powered up, it cannot be powered down without the use of a craft access terminal. Powering the BaseStation down without the use of a craft access terminal could permanently damage the equipment.

Procedure 8-1 Powering Up the Cabinet

The cabinet is powered up using the circuit breakers on the distribution panel on the front of the cabinet. See *Figure 8.1 Distribution Panel with Circuit Breakers — Front View*

Figure 8.1 Distribution Panel with Circuit Breakers — Front View

1. Turn on the RRC breaker. The RRC breaker is on the left as you face the cabinet. See *Figure 8.2 Circuit Breakers — Front View*

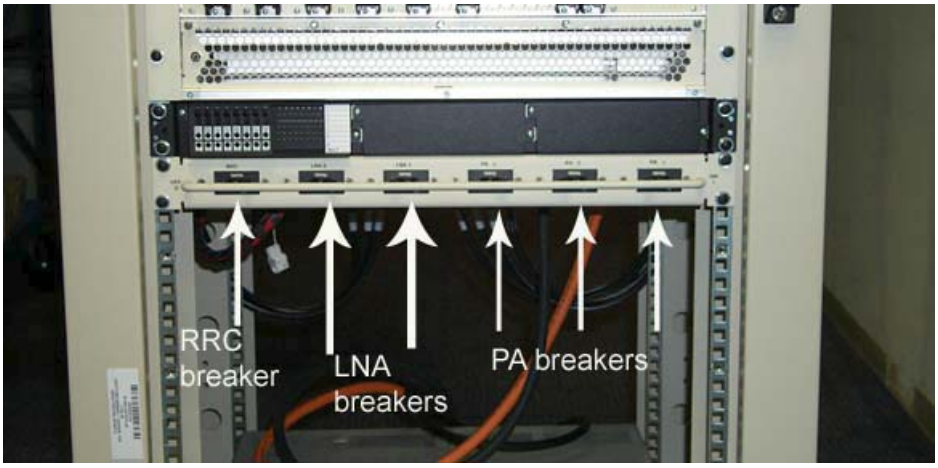

Figure 8.2 Circuit Breakers — Front View

2. Turn on the LNA breakers which are located next to the RRC breaker.

3. Turn on the PA breakers. The PA breakers are on the right of the LNA breakers.

4. Verify that the LEDs on the front of the cabinet match *Table 8.1 Power On Expected LEDs*. If the LEDs do not match the table, power the system down and check the wiring.

WARNING:

AFTER THE RADIOROUTER BASESTATION IS POWERED UP, IT CANNOT BE POWERED DOWN WITHOUT THE USE OF A CRAFT ACCESS TERMINAL. POWERING THE BASESTATION DOWN WITHOUT THE USE OF A CRAFT ACCESS TERMINAL COULD PERMANENTLY DAMAGE THE EQUIPMENT.

Table 8.1 Power On Expected LEDs

Unit	LED Name	Condition
PDU Fan Tray	FAN	Green
RRC	FAN STATUS	Green
RRC	FAN STATUS	Green
PCU1	ON (GREEN) FAIL (RED)	Green
PCU2	ON (GREEN) FAIL (RED)	Green

Chapter 9. Powering Down the Cabinet

The RadioRouter BaseStation is powered down using a PC connected to the COM1 port on the MCU board. The PC should be running a terminal emulation such as Microsoft Windows HyperTerminal.

WARNING:

AFTER THE RADIOROUTER BASESTATION IS POWERED UP, IT CANNOT BE POWERED DOWN WITHOUT THE USE OF A CRAFT ACCESS TERMINAL. POWERING THE BASESTATION DOWN WITHOUT THE USE OF A CRAFT ACCESS TERMINAL COULD PERMANENTLY DAMAGE THE EQUIPMENT.

Procedure 9-1 Powering Down the Cabinet

1. Connect a PC to the serial port of the MCU.
2. Run a terminal emulator such as Microsoft Window HyperTerminal.
3. At the `Login:` prompt, type **`root`** and press **Enter**.
4. At the `Password:` prompt, type the root login password and press **Enter**.
5. At the BS_Name#> prompt, type **`halt`** and press **Enter**. Be careful not to touch any other keys after hitting **Enter** or the system will restart.
6. The system will display the message `System Halted` followed by the message `Press any key to reboot.` Do not press any keys.
7. Turn off the PA breakers. The PA breakers are on the right as you face the cabinet. See *Figure 8.2 Circuit Breakers — Front View*
8. Turn off the LNA breakers which are located to the left of the PA breakers.
9. Turn off the RRC breaker. The RRC breaker is on the left as you face the cabinet next to the LNA breakers.

Chapter 10. Verifying the Installation

Verifying the proper installation of the cabinet is done in two parts:

1. Verifying the physical installation
2. Verifying the BaseStation operation

All items listed must be verified before the installation can be considered complete.

10.1. Verifying the Physical Installation

Verify the following:

1. Clearance requirements are met — at least 24” front and 6” rear. There must be room to open the cabinet doors for service.
2. The base station is powered up. All the LEDs in *Table 8.1 Power On Expected LEDs* must reflect the states listed in the table. The system should remain in the powered up state. If it is necessary to power down the base station, do so *only* in accordance with the instructions in *Chapter 9. Powering Down the Cabinet* .
3. Correct terminations on all T1 and alarm cables
4. No crimps in RF cables
5. RF cable markings match those specified in *Chapter 6. Connecting the Antennas Cables*.

10.2. Verifying the Base Station Operation

Operation of the base station is verified by logging in and confirming communication with the network. This verifies both the base station operation and the connectivity of the T1/Ethernet link.

Procedure 10-1 Communicating with the Core Network

1. Connect a PC to the serial port of the MCU.

2. Run a terminal emulator such as Microsoft Window HyperTerminal.

3. At the `Login:` prompt, type **`install`** and press **Enter**.

4. At the `Password:` prompt, type the install login password and press **Enter**.

5. You should see status messages ending in the message `The system is Up at the required run level – 4`. Press **Enter**.

6. The system should respond with the `BS_Name#>` prompt. This confirms that the base station is at least minimally operational.

7. Ping the default gateway to verify network connectivity.

APPENDIX A

RadioRouter BaseStation Site Preparation Punchlist

Site Preparation Items	If Okay ✓ OR Describe Outage
Environment	
Adequate Clearance: 24” front 6” rear	
Electrical system	
Electrical outlets	
Master Ground Bar	
Other	
Antenna plant	
Surge arrestor mounting	
6 Tx/Rx antenna line surge protectors	
T1 connection	
T1 surge arrestor	
Surge arrestor grounded	
Alarm connection	
1 AC power failure alarm termination point	
1 high temperature power failure alarm termination point	
Cable Support	
Trays or other support	
Cables	
DC power cabling: #6 AWG THHN or THWN	
Ground cabling to master ground bar: #6 AWG THHN or THWN	
RF cabling to surge arrestors: 50–ohm semiflexible rigid	
T1 cabling: 2–pair shielded	

Alarm sensor cables

APPENDIX B

RadioRouter BaseStation Installation Punchlist

Installation Items	If Okay ✓ OR Describe Outage
Overall	
Cabinet is physically intact	
RadioRouter Chassis	
MCU	
BHU	
PCU	
BBU	
TXU	
RXU	
AIU	
LNA/Duplexers	
Power Subsystem	
T1/Ethernet	
Alarm Connection	
Antenna Connections	
Other	