Thermostat with Humidity or Ventilation Control

User Guide

Control4™
Better. Together.™

Disclaimer

Control4® makes no representations or warranties with respect to any Control4 hardware, software, or the contents or use of this publication, and specifically disclaims any express or implied warranties of merchantability or fitness for any particular purpose. Control4 reserves the right to make changes to any and all parts of Control4 hardware, software, and this publication at any time, without any obligation to notify any person or entity of such changes.

Trademarks

©2014 Control4. All rights reserved. All rights reserved. Control4, the Control4 logo, the Control4 iQ logo and the Control4 certified logo are registered trademarks or trademarks of Control4 Corporation in the United States and/or other countries. All other names and brands may be claimed as the property of their respective owners. Pricing and specifications are subject to change without notice.

Warranty

Control4 Corporation
11734 S. Election Road, Suite 200
Salt Lake City, UT 84020 USA
http://www.control4.com

Thermostat with Humidity or Ventilation Control User Guide
Part Number: 90-1883 Rev A, 3/26/2014
Model Number: C4-THERM-WH

For complete warranty information, including details on consumer legal rights as well as warranty exclusions, visit **www.control4.com/warranty**, or refer to the *Thermostat with Humidity or Ventilation Control User Guide* on the Control4 website, Resources > Documentation page at **http://www.control4.com/residential/products/resources/**.

Contents

About your new thermostat 1
- Supported model 1
- Important safety instructions 1
- Thermostat features 1
- Quick reference to controls and display 1

Operation 2
- Select system mode (Em Heat/Heat/Off/Cool/Auto) 2
- Change temperature set point 2
- Select fan setting (On/Auto/Circ) 2
- Maintenance reminders 2
- Screen lockout 2
- Power and battery replacement 3

Indoor Air Quality functions 3
- Event-Based™ air cleaning 3
- Humidifier control 3
  - Automatic mode 3
  - Manual mode 4
- Dehumidifier control 4
  - If dehumidification is installed 4
  - If dehumidification is done with the air conditioner 4
- Fresh air 5

Program schedule and holds 5
- Understanding program schedules 5
- Progressive recovery 5
- Program schedule holds
  - 2 Hour 5
  - Permanent 5
  - Next Event 6
  - Timed 6

Control4 thermostat with humidity or ventilation control

User guide

Supported model

C4-THERM-WH Thermostat—White

Important safety instructions

Warning! Install in accordance with all national and local electrical codes.

Warning! This product is not intended for use with line-voltage baseboard heaters.

Important: Improper use or installation can cause **loss/damage of property**.

Important: Operate within the limits of this device as specified in this *Thermostat with Humidity or Ventilation Control User Guide* and *Thermostat with Humidity or Ventilation Control Safety and Installation Instructions.*

Important: Using this product in a manner other than outlined in this document voids your warranty. Further, Control4 is *not* liable for any damage incurred with the misuse of this product. See the warranty information in the *Thermostat with Humidity or Ventilation Control User Guide* or on the Control4 website at **www.control4.com/warranty.**

Thermostat features

- Up to 4 stage heat and 2 stage cool operation.
- Indoor air quality control.
  - Humidification (automatic or manual control).
  - Dehumidification.
  - Event-Based™ air cleaning.
  - Ventilation with temperature and humidity limits.
- Temperature control.
- Message center provides feedback and instructions.
- Dual power option (24VAC or battery).
- Programmable fan control with fan circulation mode.
- Easy-to-use temperature control can override program schedule at any time.
- Progressive recovery ensures proper temperature at the start of a program event.
- Built-in compressor protection prevents damage to your equipment.
- System test mode.

Quick reference to controls and display

Home screen

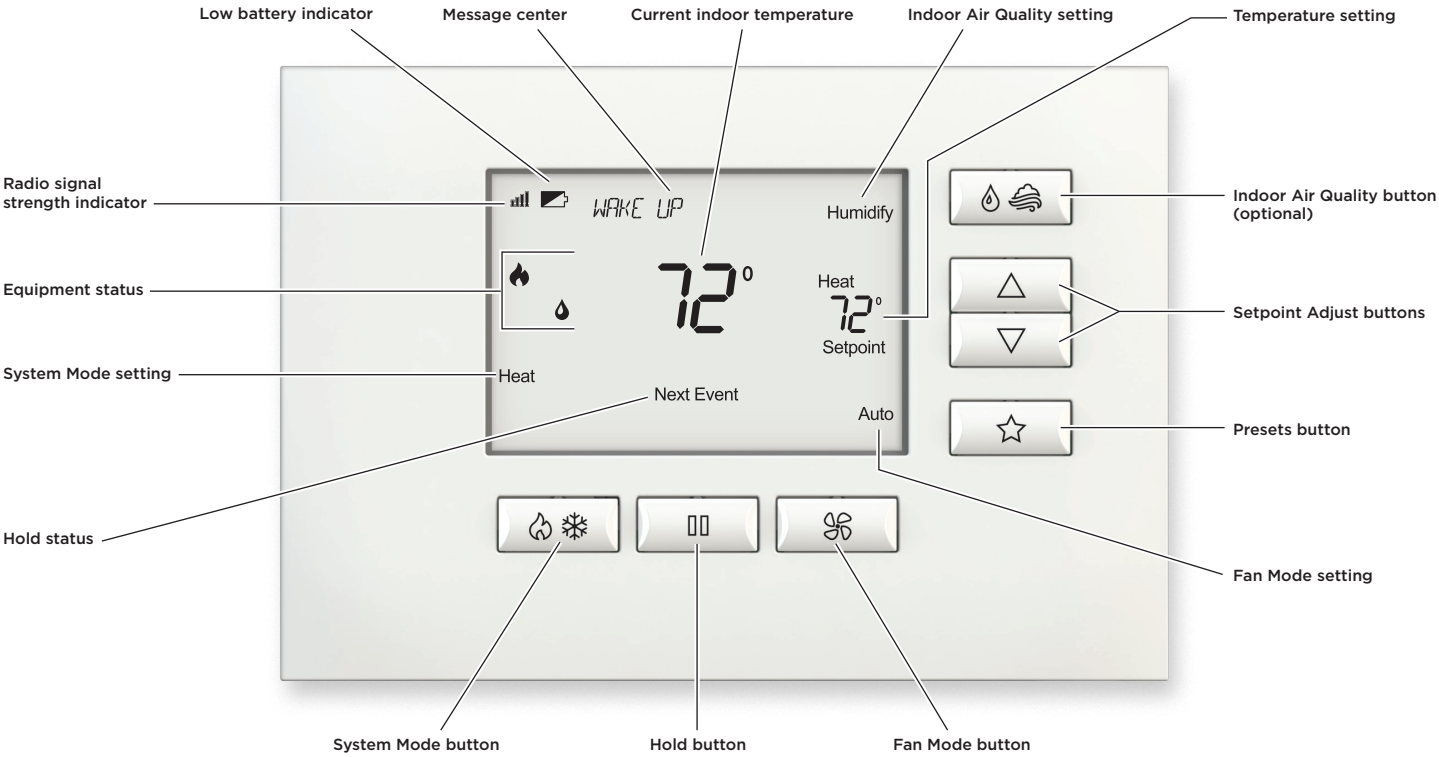

Note: Backlight is activated with the first button press and automatically turns off.

Operation

Select system mode (Em Heat/Heat/Off/Cool/Auto)

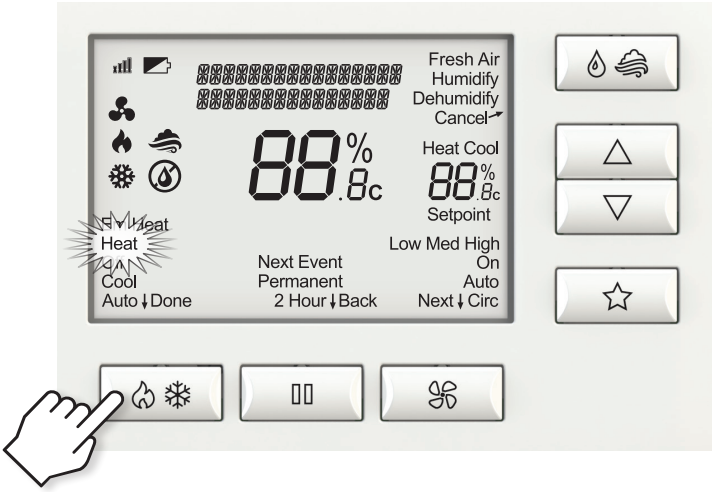

Press button to select:

Em Heat: (only for heat pumps with auxiliary heat) Thermostat controls auxiliary heat. Heat pump will not operate in **Em Heat** mode.

Heat: Thermostat controls only the heating system.

Off: Heating and cooling systems are off.

Cool: Thermostat controls only the cooling system.

Auto: (if enabled in installer setup) Thermostat automatically selects heating or cooling depending on the indoor temperature.

The current system mode selection will flash. After 7 seconds without any button presses, the selected system mode will be accepted by the thermostat.

Change temperature set point

Press △ or ▽ buttons to adjust the current set point.

Select fan setting (On/Auto/Circ)

When the fan mode is changed during a program event it remains in that mode until the next event starts. The fan must be programmed to FAN ON in the schedule to run continuously through all events.

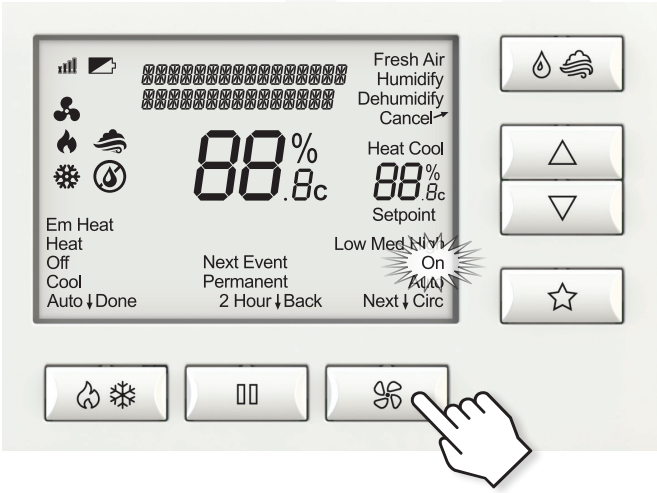

Press button to select:

On: Fan runs continuously. Use this mode for maximum air circulation/filtering.

Auto: Fan runs only when the heating or cooling system is on.

Circ: Same as **Auto**, but ensures the fan is on for at least 30 minutes per hour. Use this mode for a balance of energy savings and air circulation/cleaning.

The current fan selection will flash. After 7 seconds without any button presses, the selected fan mode will be accepted by the thermostat.

Maintenance reminders

Maintenance reminders are set up by the installer to indicate when the equipment is due for service. If a maintenance reminder is displayed, call your HVAC dealer for service. They can be cleared by setting the system mode to off and then holding the button continuously for 5 seconds. Press △ and ▽ select **Yes** to Service Reminders and then press button (Next). Press △ and ▽ buttons to select **Yes** for each reminder you would like to reset. Press button (Next) to go to the next reminder or button (Back) to go to a previous reminder. Press button (Done) to reset the selected service reminders.

Screen lockout

Certain features of the thermostat can be locked so that changes at the thermostat are not allowed. This feature can be overridden by pressing and holding button for 5 seconds.

Power and battery replacement

This thermostat can be AC powered, battery powered, or both (to provide backup power for communication with the Control4 system). The thermostat uses four alkaline AA batteries.

The thermostat has a memory backup that saves the thermostat settings in case of a power interruption. The system settings will be retained, but the clock resets after both battery and AC power are removed. Clock synchronization comes from the connection to the Control4 system. To access the batteries for replacement, remove the bezel as shown.

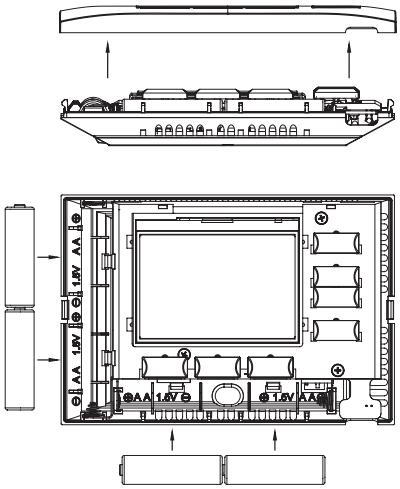

Indoor Air Quality functions

Event-Based™ air cleaning

If installed, air cleaning can be controlled through the Control4 system. Air cleaning will activate the fan for the purpose of air cleaning and can operate in five different modes as defined on this page.

Off: The air cleaner will not call the fan for the purpose of air cleaning.

Note: If air cleaning is installed, air cleaning will still occur during normal fan operation during heating, cooling or other indoor air quality events.

Constant Clean: This option will provide the maximum amount of air cleaning available. The air cleaner will be active for 24 hours a day, seven days a week.

Automatic: The air cleaner will run a minimum of 30 minutes every hour. The air cleaner will monitor the amount of time your heating and cooling system runs; if 30 minutes is not reached the air cleaner will automatically turn on. This will maximize the amount of air cleaning while minimizing energy consumption.

Event Clean (3 hour cycle): When selected, the air cleaner will run for 3 hours continuously and then return to the most recent mode of **Off**, **Automatic**, or **Constant Clean**. This option only cleans the air when needed; an example would be after vacuuming.

Allergies (24 hour cycle): When seasonal allergies spike and outside air quality is at its worst, choose this option. Your air cleaner will run continuously for 24 hours, then return to the most recent mode of **Off**, **Automatic**, or **Constant Clean**.

Note: The thermostat will manage fan and air cleaning selections when the selections overlap.

Humidifier control

If humidification is installed it can be controlled in two modes, automatic or manual.

Press button to select **Humidify** and enter the Humidifier Control screen.

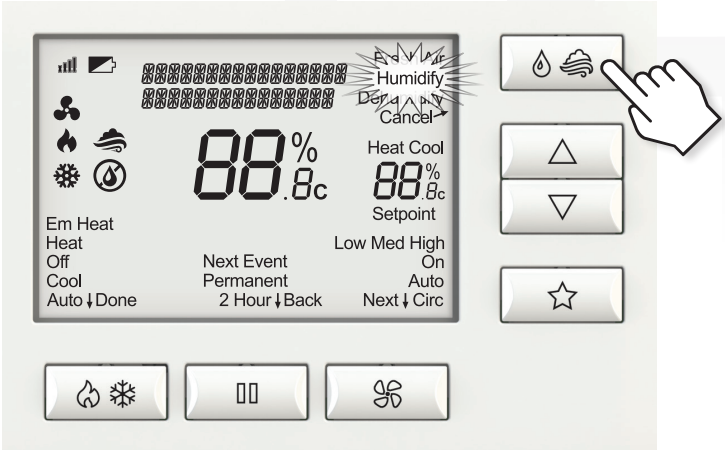

Automatic or manual mode is configured by the installer. To determine which mode the thermostat is set to, see the diagrams on pages 3 and 4.

In automatic mode you will receive the optimum amount of humidity so that your home and its furnishings are protected from the damaging effects of excess condensation or low humidity during heating season. The thermostat automatically adjusts your home's relative humidity based on the outdoor temperature.

The humidity setting needs to be set initially to meet your home's conditions. Follow these steps when adjusting your thermostat.

1. Adjust the humidity setting to "3" which is within normal range. During the next 24-48 hours it may be necessary to adjust the setting for more or less humidity, depending on your personal comfort and home's requirements.
2. During the coldest portion of the first heating season, minor adjustments may be necessary. This is dependent upon your home's construction.

The relative humidity in your home will now be accurately controlled to meet your needs and should not need further adjustment during future heating seasons.

Humidifier Control screen for humidification in automatic mode

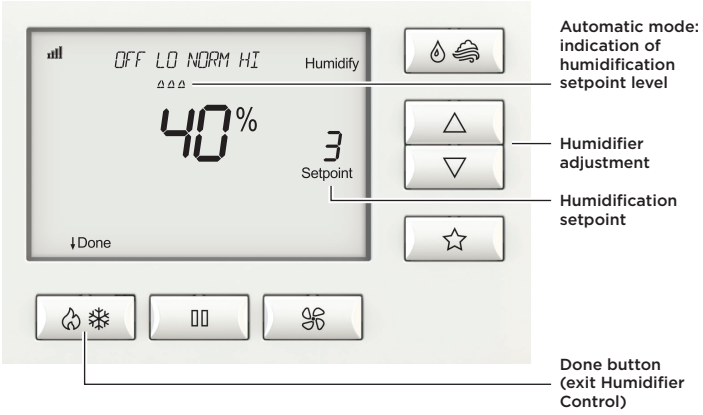

In manual mode it is important to anticipate a drop in outdoor temperature and reduce the setting accordingly to avoid excessive condensation. Use the following table to determine the proper relative humidity setting.

Outdoor temperature/indoor relative humidity

Outside temperature	Recommended relative humidity
+50°F	50%
+40°F	45%
+30°F	40%
+20°F	35%
+10°F	30%
0°F	25%
-10°F	20%
-20°F	15%

Humidifier Control screen for humidification in manual mode

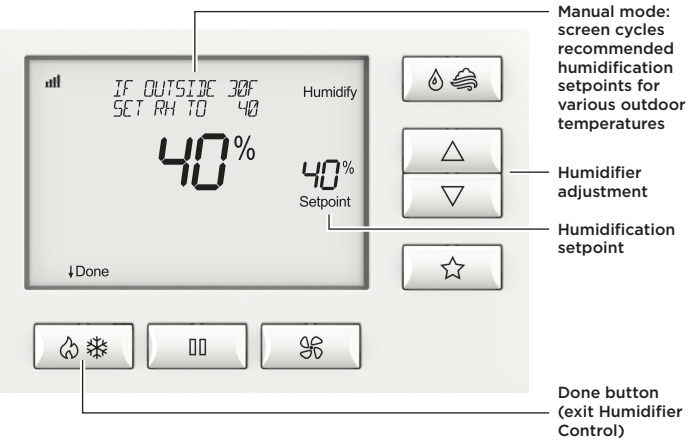

Dehumidifier control

If dehumidification is installed the thermostat can be configured, through the installer set-up, to control dehumidification with either a whole home dehumidifier or with the air conditioner (cooling unit).

Press button to select **Dehumidify** and enter the Dehumidifier Control screen.

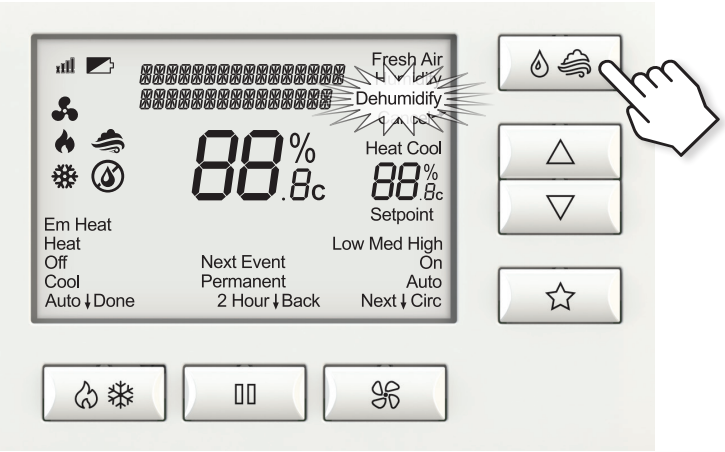

The thermostat will allow you to set the desired humidity (% relative humidity) level in your home and can be used to turn the dehumidification On or Off.

Use the dehumidification adjustment to set the dehumidification setpoint to 60% when first installed. Allow dehumidification to run until the initial setpoint is reached, before deciding if you want to change the humidity setting.

△ **Raise the setting if you prefer the air to be less dry**; this will reduce the amount of time that dehumidification runs.

▽ **Lower the setting if you prefer the air to be more dry**; this will increase the amount of time that dehumidification runs.

Your comfort is the best measure of how to adjust your setting. When first installed, your dehumidifier has to remove all the moisture that is initially in your home. The home acts like a sponge so the moisture in the materials of your home is at the same level as the air. After drying the air, the materials of the home will release the moisture back into the air until they are again at the same level. As a result, it is not uncommon for dehumidification to operate for an extended period of time when it is first installed.

Energy Saving Tip #1:

Adjust the setting to be as high as is comfortable to reduce dehumidification run time – if it feels clammy or smells damp or moldy lower the setting. To save energy, turn the dehumidifier control OFF when you open your windows just as you would with air conditioning.

Energy Saving Tip #2:

If vacating your home for an extended period in the summer, set the relative humidity at 60% and set the cooling setpoint as high as you are comfortable setting it to in cooling mode. Consult with appropriate professionals regarding the highest temperature that is safe for your pets or possessions. This will keep the humidity at a controlled level to help prevent mold while minimizing the amount of the cooling energy used.

Dehumidifier Control screen with only dehumidification installed

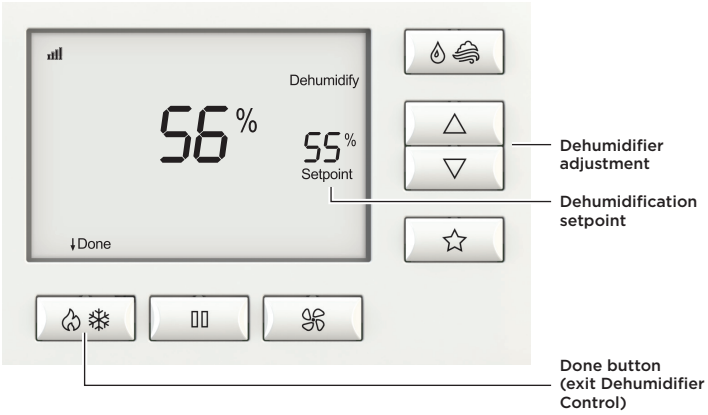

If dehumidification is done with the air conditioner, the thermostat will cool up to 3°F beyond the cooling setpoint for dehumidification. Note overcooling may not be sufficient to meet the dehumidification setpoint.

Fresh Air

If ventilation is installed, Fresh Air can operate in four different modes as defined on this page.

Press button to select **Fresh Air** and enter the Fresh Air screen.

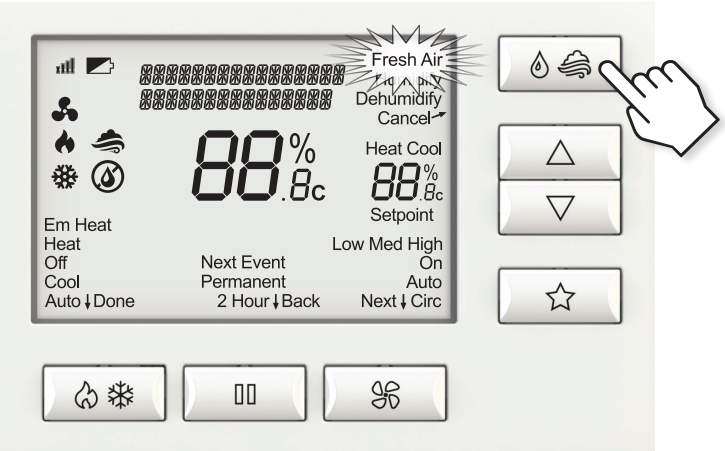

Off: Ventilation will not run.

Automatic: Ventilation will cycle based on the parameters set by the installer to meet your home's ventilation requirements.

3 Hour Event: Ventilation will be constantly energized for 3 hours and then the fresh air mode will return to **Off** or **Automatic** depending on which was mode was most recently active. This option is used when fresh air is needed. An example would be after cooking.

24 Hour Event: Ventilation will be constantly energized for 24 hours and then the fresh air mode will return to **Off** or **Automatic** depending on which was mode was most recently active. This option is used when a large amount of fresh air is desired. An example would be a day with desirable outdoor conditions.

Fresh Air screen

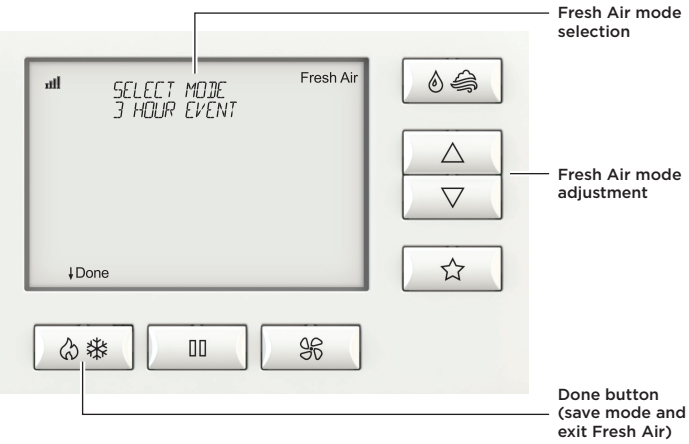

Program schedule and holds

Understanding program schedules

Setting the schedule for the thermostat is done at the Control4 system.

Progressive recovery

The Progressive Recovery feature allows the thermostat to activate the heating and cooling equipment **prior** to a scheduled event in order to reach the desired temperature at the start of that scheduled event.

Example: If the Next Event time is 6 a.m., and the temperature is 70°, the heat will come on before 6 a.m., so the temperature is 70° by 6 a.m.

Program schedule holds

Press button to initiate a **Next Event**, **2 Hour** or **Permanent** hold. All options will be displayed and the current hold selection will flash.

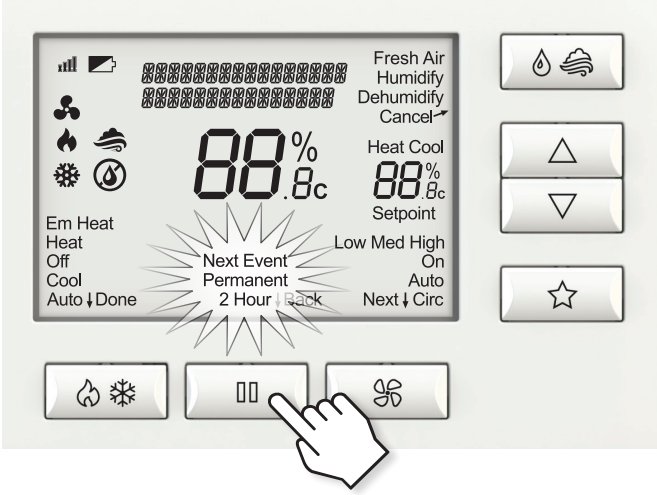

After 7 seconds without any button presses the selected hold will be accepted by the thermostat. After the option of **2 Hour** if button is pressed again, no hold options will be displayed. This indicates no hold option is to be selected and can be used to cancel any active holds. Pressing button again will display all hold options with **Next Event** selected.

While in **Next Event**, **2 Hour**, or **Permanent** hold, the temperature setting and fan mode can be adjusted and will stay at that setting until the hold ends or is cancelled.

Next Event hold will override the temperature setting and fan mode for the current schedule event and will remain active until the next schedule event occurs.

2 Hour hold will override the temperature setting and fan mode for the schedule events and will remain active for two hours from the time the hold is initiated.

Permanent hold will override the temperature settings for all events.

Next Event hold

Press △ or ▽ buttons to immediately adjust the temperature when the schedule is running. This will hold the temperature setting until the next scheduled event.

A **Next Event** hold can also be initiated by pressing ▯▯ button and selecting **Next Event**.

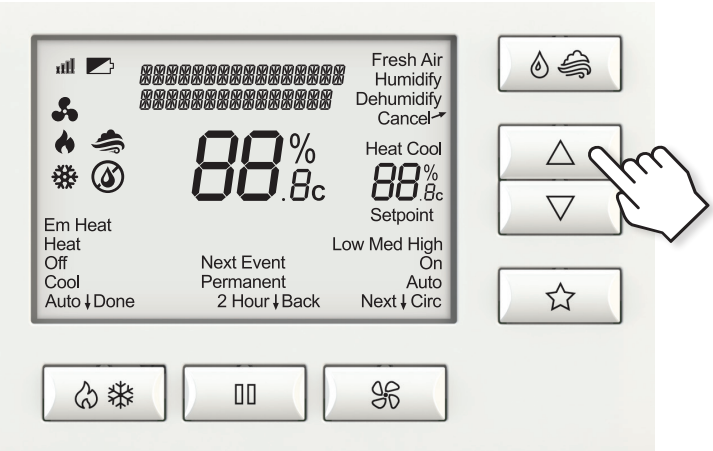

Timed hold

Timed hold can be set at the Control4 System.

Control4™
Better. Together.™

control4.com | 888.400.4070

90-1883 3.14

Thermostat with Humidity or Ventilation Control

Safety and Installation Instructions

Control4™

Disclaimer

Control4® makes no representations or warranties with respect to any Control4 hardware, software, or the contents or use of this publication, and specifically disclaims any express or implied warranties of merchantability or fitness for any particular purpose. Control4 reserves the right to make changes to any and all parts of Control4 hardware, software, and this publication at any time, without any obligation to notify any person or entity of such changes.

Trademarks

©2014 Control4. All rights reserved. All rights reserved. Control4, the Control4 logo, the Control4 iQ logo and the Control4 certified logo are registered trademarks or trademarks of Control4 Corporation in the United States and/or other countries. All other names and brands may be claimed as the property of their respective owners. Pricing and specifications are subject to change without notice.

Warranty

Control4 Corporation
11734 S. Election Road, Suite 200
Salt Lake City, UT 84020 USA
http://www.control4.com

Thermostat with Humidity or Ventilation Control Safety and Installation Instructions
Part Number: B2206227 Rev B, 2/15/2014
Model Number: C4-THERM-WH

For complete warranty information, including details on consumer legal rights as well as warranty exclusions, visit **www.control4.com/warranty**, or refer to the *Thermostat with Humidity or Ventilation Control User Guide* on the Control4 website, Resources > Documentation page at **http://www.control4.com/residential/products/resources/**.

Contents

Supported model 1
Important safety instructions 1
General description 2
Box contents 3
Supported systems 3
Installation 4
- Installation location recommendations 4
- If replacing an existing thermostat 5
- Thermostat mounting 6
- Wiring terminal 7
- Outdoor temperature sensor (included) 9
- Remote temperature sensor (optional) 11
- Wiring diagrams 13
  - Conventional heat/cool single transformer 13
  - Conventional heat/cool two transformers 13
  - Heat pump single transformer 14
  - Heat pump two transformers 14
  - Indoor Air Quality equipment—dehumidifier 15
  - Indoor Air Quality equipment—humidifier 15
  - Indoor Air Quality equipment—ventilation 16
- Power and battery replacement 17

Setup and testing 18
Equipment Type selection switch 18
Installer Setup menu. 19
Change system settings. 20
HVAC Installer system settings table 21-25
Indoor Air Quality system settings tables 26
Air cleaning sytem settings table. 26
Humidifier system settings table 27-28
Dehumidifier system settings table 29
Ventilation system settings table 30-32
Climate map for ASHRAE Fresh Air Setup 33
Managing the ZigBee® network connection 34
System Test menu. 35
System Test tables 38-42
Quick reference to controls and display 43
Troubleshooting. 44
Error codes 47
Thermostat features 48
Specifications 49

Supported model

C4-THERM-WH Thermostat—White

Important safety instructions

Warning! Install in accordance with all national and local electrical codes.

Warning! This product is not intended for use with line-voltage baseboard heaters.

Important: Improper use or installation can cause **loss/damage of property**.

Important: Operate within the limits of this device as specified in this *Thermostat with Humidity or Ventilation Control Safety and Installation Instructions* and *Thermostat with Humidity or Ventilation Control User Guide.*

Important: Using this product in a manner other than outlined in this document voids your warranty. Further, Control4 is *not* liable for any damage incurred with the misuse of this product. See the warranty information in the *Thermostat with Humidity or Ventilation Control User Guide* or on the Control4 website at **www.control4.com/warranty.**

General description

This Control4® Thermostat enables intelligent HVAC and Indoor Air Quality control as part of a Control4 automated system. This thermostat uses the ZigBee® (802.15.4) wireless networking standard to communicate with the Control4 system.

The Control4 Thermostat features a backlit LCD that displays the temperature, HVAC status, Indoor Air Quality control status, fan status, hold status, and HVAC operating mode. The home screen allows temperature setpoint adjustments, HVAC mode change, various hold options, fan control, and access to the Indoor Air Quality control screens. The Indoor Air Quality control screens can be used to control ventilation, humidification, or dehumidification. The thermostat can operate as a stand-alone control if it loses communication with the Control4 system.

Box contents

- Thermostat
- Wired outdoor temperature sensor
- 4 AA batteries
- 2 screws
- 2 wall anchors
- Warranty card
- *Control4 Thermostat with Humidity or Ventilation Control Safety and Installation Instructions* (this document)

Supported systems

- One or two stage conventional heat/cool system
- One or two stage heat pump with up to two stages of auxiliary or emergency heat
- Optional heat only or cool only operation
- Configurable for electric or fossil fuel heating
- Millivolt heat
- Hydronic heat

Installation

Installation location recommendations

Thermostat should be mounted:

- On an interior wall, in a frequently occupied space.
- Approximately 5′ (about 1.5 meters) above the floor.
- At least 18″ (about 0.5 meter) from an outside wall.
- Thermostat can be mounted to a vertical, single gang, electrical junction box.

Do not mount thermostat:

- Behind doors, in corners, or other dead air spaces.
- In direct sunlight, near lighting fixtures, or other appliances that give off heat.
- On an outside or unconditioned area wall.
- In the flow of a supply register, in stairwells, or near outside doors.
- On a wall with concealed pipes or ductwork.

If replacing an existing thermostat

- If your existing thermostat is configured using system settings, record the existing system settings so they can be referenced when setting the HVAC Installer system settings for this thermostat. For detailed instructions on how to access and read the system settings for your existing thermostat, refer to the installation instructions for that thermostat.
- Turn off power to the thermostat.
- Remove the thermostat from the wall, but do not disconnect the wires yet.
- Check the number of wires attached to the existing thermostat. Wrap the bare ends of any unused wires in electrical tape to prevent them from shorting to other wires.
- If the existing thermostat has a letter identifying each wire, use a piece of tape to label each wire with the corresponding letter. The labels can be used to later identify the wires for your new thermostat.
- Disconnect the wires from the existing thermostat, taking care that none of the wires fall back into the wall.

Thermostat mounting

1. Remove the rear mounting plate from the thermostat.
2. Pull wires through the opening on the back of the thermostat.
3. Position and level the mounting plate of the thermostat on the wall, and mark the hole locations with a pencil.
4. Drill 1/4″ (6.35 mm) holes and insert the supplied anchors (drywall only).
5. Place the mounting plate over the anchors, then insert and tighten the screws.
6. Seal the wire entry holes to prevent drafts affecting temperature readings.

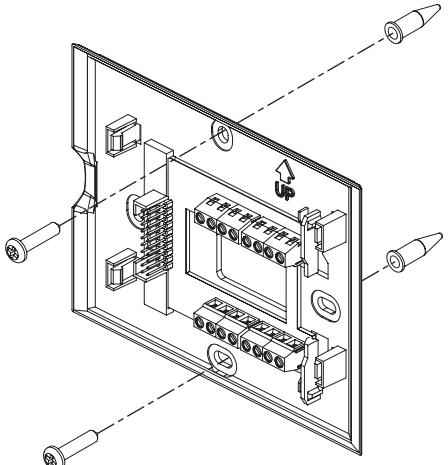

Wiring terminal

Wire specifications:

18-24 gauge thermostat wire

Installation notes:

- Ensure that power at the HVAC equipment is off.
- Loosen screw terminals, insert stripped wire, and re-tighten.
- Push the excess wire back into the opening and plug the wall opening to prevent drafts.

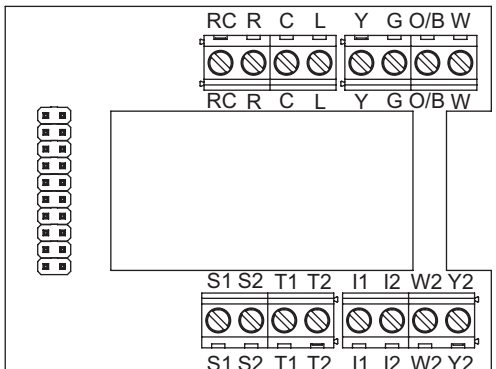

I1 & I2—Indoor Air Quality control output

C—Common (optional when powered by batteries)

O/B—Reversing valve

Y—First-stage cooling / compressor

Y2—Second-stage cooling / compressor

G—Fan

RC—24VAC supply cooling[1]

R—24VAC supply heating[1]

W2—Second-stage heat / auxiliary

W—First-stage heat / auxiliary

L—System fault indicator (optional) (heat pump only)

S1 & S2—Outdoor temperature sensor (included)

T1 & T2—Remote temperature sensor (optional)

[1] Jumper between RC & R is used in single-transformer systems (see wiring diagrams).

Outdoor temperature sensor (included)

Outdoor temperature can be measured by attaching the included sensor to the S1 and S2 terminals. The outdoor sensor must be enabled in the thermostat's *Installer Setup* menu.

Heat pump models can use the outdoor temperature to effectively utilize the heat pump:

- When the outdoor temperature is less than the Low Balance Point, the heat pump is locked out and only auxiliary heating is used.
- When the outdoor temperature is higher than the High Balance Point, the auxiliary heating is locked out and only the heat pump is used to provide heating.

Indoor Air Quality functions can use the outdoor temperature sensor to:

- Control humidification setpoint based on outdoor temperature to prevent condensation.
- Lock out humidification for temperatures over 60°F (15.6°C) or below -30°F (-34.4°C).
- Lock out ventilation based on high and/or low outdoor temperatures.

The outdoor temperature sensor should be mounted:

- On the side of the building out of direct sunlight (north side recommended).
- Above snow line.
- At least 3′ (about 1 meter) away from exhaust vents and condensing lines.
- Using less than 300′ (about 100 meters) of wire.
- Do not route wires parallel to 120VAC lines.

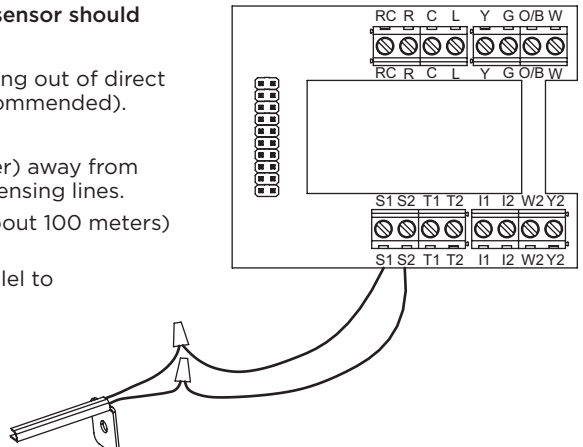

Remote temperature sensor (optional)

A remote temperature sensor can be used if the thermostat is going to be mounted in a concealed location. Additionally, Control4 programming can be utilized to switch between the on-board temperature sensor and the remote temperature sensor, allowing the temperature reading to come from different areas based on time of day or daily activity. A AC-FMTS1-W flush mount or AC-DOTS1-W surface mount remote temperature sensor can be attached to the T1 and T2 terminals and mounted in a recommended area. The remote sensor must be enabled in the thermostat's *Installer Setup* menu. When the remote sensor is selected as the primary sensor (System Setting 14 [Primary Sensor]), it overrides the internal sensor.

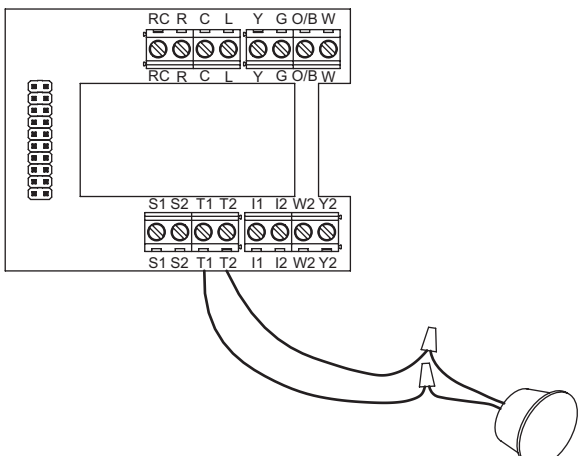

The remote temperature sensor should be mounted:

- On an interior wall, in a frequently occupied space.
- About 5′ (1.5 meters) above the floor.
- At least 18″ (about 0.5 meter) from an outside wall.
- Using less than 300′ (about 100 meters) of wire.

Do not mount the remote sensor:

- Behind doors, in corners, or other dead air spaces.
- In direct sunlight, near lighting fixtures, or near other appliances that give off heat.
- On an outside or unconditioned area wall.
- In the flow of a supply register, in stairwells, or near outside doors.
- On a wall with concealed pipes or ductwork.
- Parallel to 120VAC lines.

Conventional heat/cool wiring diagrams

Single transformer (use jumper wire)

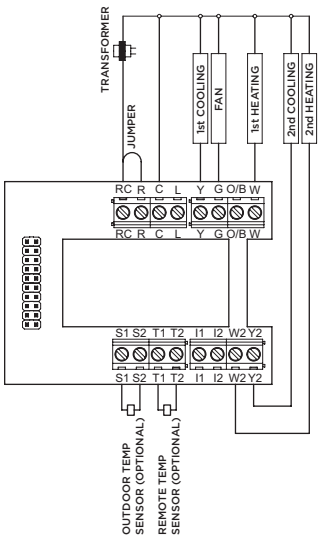

Two transformers (remove jumper wire)

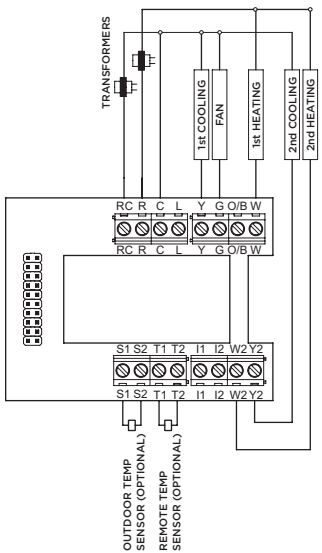

Heat pump wiring diagrams

Single transformer (use jumper wire)

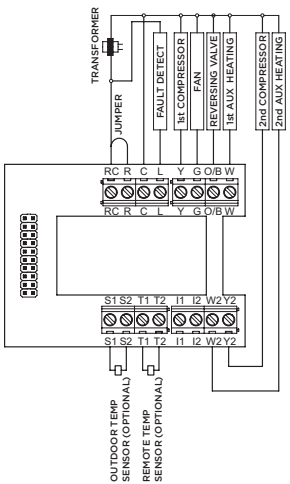

Two transformers (remove jumper wire)

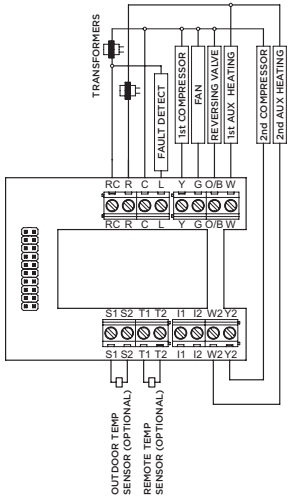

Note: The O/B terminal must be configured for O or B operation by setting system setting 01 (Reversing Valve) to **O—On in Cooling** or **B—On in Heating**.

Indoor Air Quality equipment wiring diagrams

Dehumidifier wiring

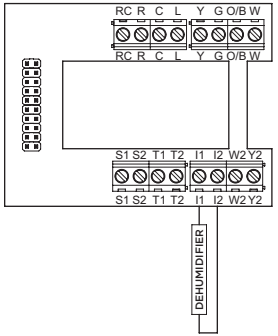

Humidifier wiring

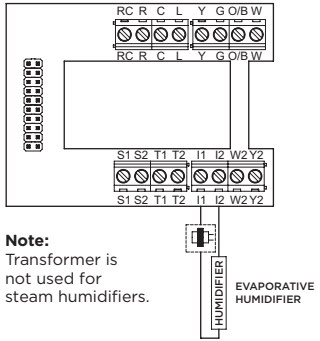

Note:
Transformer is not used for steam humidifiers.

Note: The I1/I2 output is a dry contact closure. The humidifier wiring diagram assumes the control is powering a solenoid valve. The dehumidifier wiring diagram is for a normally open dry contact input. See the individual humidifier or dehumidifier installation instructions for product-specific wiring details.

Indoor Air Quality equipment wiring diagrams

Ventilation wiring

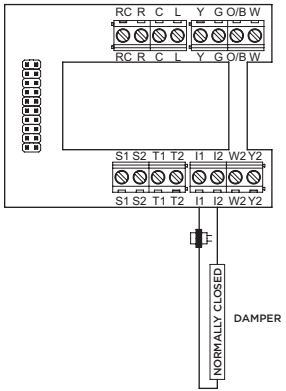

Note: The I1/I2 output is a dry contact closure. The ventilation diagram assumes the control is for a normally closed damper. See the individual ventilation installation instructions for product-specific wiring details.

Power and battery replacement

This thermostat can be AC powered, battery powered, or both (to provide backup power for communication with the Control4 system). The thermostat uses four alkaline AA batteries. Batteries are optional but recommended if your thermostat was wired to run on AC power when installed. If the thermostat will be AC powered, the thermostat should be powered from 24VAC before installing batteries to confirm AC power is present.

For heat pump systems, the C terminal must be connected to the common of the 24VAC transformer for the system fault indicator to operate.

The thermostat has a memory backup that saves the thermostat settings in case of a power interruption. The system settings will be retained, but the clock resets after both battery and AC power are removed. Clock synchronization comes from the connection to the Control4 system. To access the batteries for replacement, remove the bezel as shown.

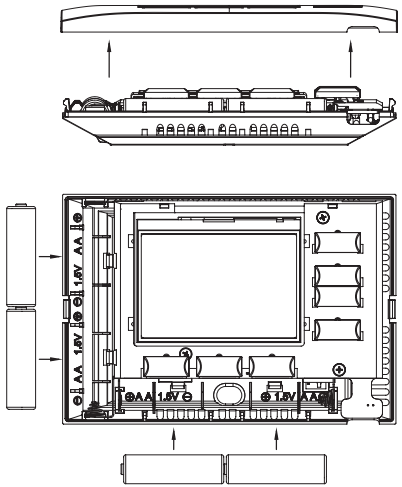

Setup and testing

Equipment Type selection switch

This thermostat has the option of being used in heat pump or heat/cool systems. Use the Equipment Type selection switch on the back of the thermostat housing to select this option. This setting is displayed in the thermostat's *Installer System Settings* menu under *Equipment Type*.

Note: The thermostat reboots within 10 seconds after the switch position is changed.

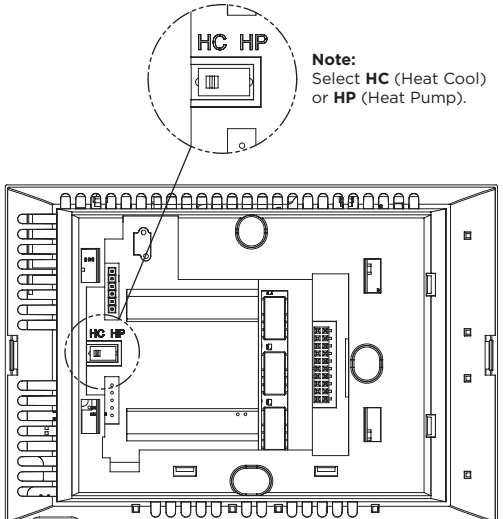

Note:
Select **HC** (Heat Cool) or **HP** (Heat Pump).

Installer Setup menu

To enter the Installer Setup menu and select equipment to set up:

In the *Installer Setup* menu, you can select **HVAC** or **Indoor Air Quality Setup**. If *Indoor Air Quality Setup* is selected, you can then set up Air Cleaning, Humidification, Dehumidification, or Ventilation.

Press button to set system to OFF.

Press and hold button to enter Installer Mode.

Press △ or ▽ buttons to select SETUP.

Press button (Next) to enter Installer Setup.

Press △ or ▽ buttons to change the menu selections.

Press button (Next) to accept the menu selection.

Change system settings

Press button (Next) or button (Back) to page through settings.

Press △ or ▽ buttons to adjust the setting.

Press button (Done) to save and exit, or button (Cancel) to exit without saving.

The thermostat will discard changes and exit if nothing is pressed within 60 seconds.

To reset the system settings to default, set system setting number 31 (Restore Defaults) to **Yes**.

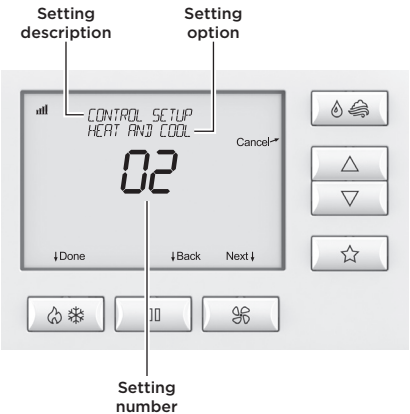

HVAC Installer system settings table

The following table contains the system settings and their details. Default settings are shown in **bold**. Some settings are only available based upon the value of other settings.

HVAC Installer system settings table

System setting	Description	Factory default setting (bold) and setting range
00. Equipment Type	Equipment type set by *Equipment Type* selection switch.	**Heat/Cool** Heat Pump
01. Reversing Value	Selects O or B operation for the O/B output.	**O—On in Cooling** B—On in Heating
02. Control Setup	Used to lock out heating or cooling outputs (only available when *Equipment Type* is *Heat/Cool)*.	**Heat and Cool** Heat Only Cool Only
03. Number of Stages	Number of equipment stages.	**One** Two
04. Aux Heat Stages	Number of auxiliary heat equipment stages.	**One** Two
05. Temperature Scale	Sets the thermostat for Fahrenheit or Celsius operation.	**Fahrenheit** Celsius

HVAC Installer system settings table

System setting	Description	Factory default setting (bold) and setting range
06. Heat/Cool: Fan Control in Heating Heat Pump: Auxiliary Equipment Type	Heat/Cool: Determines if the thermostat or equipment controls the fan in heating. Heat Pump: Auxiliary equipment type.	**Gas/Oil Heat** (Equipment Controls Fan) Electric Heat (Thermostat Controls Fan)
07. Extended Fan—Heat	Extends the fan run time after a heat call ends.	Disable **Enable** (90 second extension)
08. Extended Fan—Cool	Extends the fan run time after a cool call ends.	Disable **Enable** (90 second extension)
09. Internal Temperature Sensor Offset	Field adjustment of internal temperature sensor.	**0°** (no offset applied) -4°F to +4°F (-2°C to +2°C)
10. Internal RH Sensor Offset	Field adjustment of internal humidity sensor.	**0%** (no offset applied) -5% to +5%
11. Auto Changeover	Enables or disables the option of setting the system mode to *Auto*. When the system mode is set to *Auto*, the thermostat can automatically switch between heating and cooling to maintain a room temperature that is between the heat and cool setpoints.	Disable **Enable**
12. Deadband	Auto season changeover deadband.	**3°F or 1.5°C** 2°F to +9°F (1°C to 4.5°C)

HVAC Installer system settings table

System setting	Description	Factory default setting (bold) and setting range
13. Remote Sensor	Selects if the wired remote sensor is installed.	**No** Yes
14. Primary Sensor	Selects the primary sensor to be used for temperature control.	**Built In** Remote
15. Secondary Sensor	Selects the sensor to be used for control if the primary sensor fails. Remote will only be presented as an option if *Remote Sensor* is set to **Yes**.	**None** Remote Built In
16. Outdoor Sensor	Selects if an outdoor sensor is installed or if the thermostat receives an outdoor sensor value from the Control4 system.	**Not Installed** Wired Control4 Value
17. Compressor Min Off Time	Minimum off time for compressor protection.	**5 minutes** 1 to 5 minutes
18. Heating Min Off Time	Minimum off time for heating.	**2 minutes** 1 to 5 minutes
19. Equipment Min On Time	Minimum on time for heating or cooling.	**2 minutes** 1 to 5 minutes
20. Auto Changeover Time	Minimum time between heating and cooling calls.	**4 minutes** 1 to 5 minutes

HVAC Installer system settings table

System setting	Description	Factory default setting (bold) and setting range
21. First Stage Differential	Temperature difference from the setpoint required to turn on the first stage of heating or cooling.	**1°F or 0.5°C** 1°F to +9°F (0.5°C to 4.5°C)
22. Second Stage Differential	Temperature difference required to stage from the first stage of heating or cooling to the second.	**1°F or 0.5°C** 1°F to +9°F (0.5°C to 4.5°C)
23. Third Stage Differential	Temperature difference required to stage from the second stage of heating to the third.	**1°F or 0.5°C** 1°F to +9°F (0.5°C to 4.5°C)
24. Fourth Stage Differential	Temperature difference required to stage from the third stage of heating to the fourth.	**1°F or 0.5°C** 1°F to +9°F (0.5°C to 4.5°C)
25. Stage Rate	Accumulation of equipment run time used for determining equipment staging. Off = Ignores accumulated runtime in staging decision. 1 = More rapid staging of equipment (comfort). 5 = Slower staging of equipment (economy).	**2** 1 to 5 or Off
26. Progressive Recovery	Enables or disables progressive recovery. If progressive recovery is enabled, the equipment will turn on before the next scheduled event so that the space reaches the desired schedule temperature at the start of the next event.	Disable **Enable**

HVAC Installer system settings table

System setting	Description	Factory default setting (bold) and setting range
27. Low Balance Point	Low balance point is the outdoor temperature at which the compressor will be locked out and only auxiliary heat will be used for heating. This option is not displayed unless *Outdoor Sensor* is set to **Wired** or **Control4 Value** and *Equipment Type* is set to **Heat Pump**.	**20°F or -6°C** 10°F to 50°F (-12°C to 12°C)
28. High Balance Point	High balance point is the outdoor temperature at which the auxiliary heat will be locked out and only the compressor will be used for heating. This option is not displayed unless *Outdoor Sensor* is set to **Wired** or **Control4 Value** and *Equipment Type* is set to **Heat Pump**.	**65°F or 18°C** 40°F to 85°F (3°C to 30°C)
29. Reset Service Reminders	Clears the Change Air Filter, HVAC Service, and Dehumidifier Service reminders if they are active and resets the corresponding service timer. Clears the Change Water Panel reminder if it is active. If the reminder is set to **300 hours** or **600 hours**, the service timer is reset.	**No** Yes
30. HVAC Service Reminder	Elapsed time to display the *HVAC Service Reminder* message.	**Off** 1 to 12 months or Off to disable.
31. Restore Defaults	Resets all thermostat settings back to factory default.	**No** Yes

Indoor Air Quality system settings tables

The following tables contain the Indoor Air Quality system settings and their details. Default settings are shown in bold. Some settings are only present dependent upon the value of other settings.

The use of the included outdoor temperature sensor (recommended) enables additional Indoor Air Quality functionality. If the outdoor temperature sensor was not enabled in the HVAC system settings, HVAC system setting 16 (Outdoor Sensor) will be presented before entering the Indoor Air Quality system settings.

Refer to the *User Guide* for further information about thermostat features.

Air cleaning system settings table

System setting	Description	Factory default setting (bold) and setting range
Air Cleaner Installed	Selects if an air cleaner is installed. (If set to **No**, no other air cleaning settings are available.)	**No** Yes
Change Air Filter Reminder	Elapsed time to display the “Change Air Filter” message.	**Off** 1 to 12 months or “Off” to disable

Humidifier system settings table

Note: A humidifier can be installed only if ventilation is not installed and *Dehumidifier Control* is not set to **Whole Home**.

System setting	Description	Factory default setting (bold) and setting range
Humidifier Installed	Selects if a humidifier is installed. (If set to **No**, no other humidifier settings are available.)	**No** Yes
Humidifier Mode	Selects Auto or Manual mode. Auto mode controls humidity based on the humidity setting and outdoor temperature. Manual mode controls humidity based on the %RH setpoint. (Auto mode is available only if Outdoor Sensor is set to **Yes**.)	**Auto** Manual
Humidity Setpoint Deadband	Selects the minimum difference between the humidifier and dehumidifier setpoints. (Only available if Humidifier Installed is set to **Yes**, and Dehumidifier Control is set to **Air Conditioner**. Available in both setups.)	10 Percent RH 10 to 20 Percent RH
Humidifier Operation	Selects when humidification is allowed to occur relative to heating and fan operation.	**Heat Only** Heat or Fan Forces Fan
Change Water Panel Reminder	Selects when the “Change Water Panel” message is displayed.	**Off** 1 Per Season 2 Per Season 300 Hours 600 Hours

Humidifier system settings table

Note: A humidifier can be installed only if ventilation is not installed and *Dehumidifier Control* is not set to **Whole Home**.

System setting	Description	Factory default setting (bold) and setting range
Reminder Month (Change Water Panel Reminder set to **1 Per Season**) First Reminder Month (Change Water Panel Reminder set to **2 Per Season**)	If Change Water Panel Reminder is set to **1 Per Season**: Determines the month the "Change Water Panel" message is displayed. If Change Water Panel Reminder is set to **2 Per Season**: Determines the first month the "Change Water Panel" message is displayed.	**October** November December January February March April May June July August September
Second Reminder Start Month	Determines the second month the "Change Water Panel" message is displayed. (Only available when Change Water Panel Reminder set to **2 Per Season**.)	October November December **January** February March April May June July August September

Dehumidifier system settings table

Note: Dehumidifier Control can only be set to **Whole Home** if ventilation and humidification are not installed.

System setting	Description	Factory default setting (bold) and setting range
Dehumidifier Control	Selects method of dehumidification. (If set to **None**, no other dehumidifier settings are available.)	**None** (no dehumidification installed) Whole Home Air Conditioner
Humidity Setpoint Deadband	Select the minimum difference between the humidifier and dehumidifier setpoints. (Only available if *Humidifier Mode* is set to **Manual** and *Dehumidifier Control* is set to **Air Conditioner**. Available in both setups.)	10 Percent RH 10 to 20 Percent RH
Lockout Dehumidifier During Cooling	Selects if dehumidification is disabled during a cooling call. (Only available if *Dehumidifier Control* is set to **Whole Home**.)	No **Yes**
Dehumidifier Forces Fan	Selects if dehumidification can turn on the fan. (Only available if *Dehumidifier Control* is set to **Whole Home**.)	No **Yes**
Dehumidifier Service Reminder	The period for displaying the "Dehum Service Reminder" message. (Only available if *Dehumidifier Control* is set to **Whole Home**.)	**Off** 1 to 12 months or "Off" to disable
Dehumidifier Overcooling Limit	Selects the amount of overcooling that can occur for dehumidification. (Only available if *Dehumidifier Control* is set to **Air Conditioner**.)	**3°F (1.5°C)** 1°F to 3°F (0.5°C to 1.5°C)

Ventilation system settings table

Note: Ventilation can be installed only if humidification is not installed and *Dehumidifier Control* is not set to **Whole Home**.

System setting	Description	Factory default setting (bold) and setting range
Fresh Air Vent Installed	Selects if ventilation is installed. (If set to **No**, no other ventilation settings are available.)	**No** Yes
Fresh Air Forces Fan	Selects if ventilation forces the fan on.	No **Yes**
Fresh Air Setup	Selects if ventilation is configured through the ASHRAE setup or Timed. If **ASHRAE** setup is selected, the hourly ventilation time is calculated using the ASHRAE recommendations. If **Timed** setup is selected, the hourly ventilation time is determined based on the *Fresh Air Time* value.	**Timed** ASHRAE
Fresh Air Time	Selects the number of minutes per hour that ventilation will be active. (Only available if *Fresh Air Setup* is set to **Timed**.)	**30 MIN/HR** 0 to 60 MIN/HR
High Limit Outdoor Temp	Selects if ventilation is disabled when the outdoor temperature exceeds the outdoor high limit. (Only available if *Fresh Air Setup* is set to **Timed** and an outdoor temperature sensor is installed.)	**No** Yes
Outdoor High Limit	Sets the high temperature limit for ventilation. (Only available if *High Limit Outdoor Temp* is set to **Yes**.)	**100°F (38°C)** 90°F to 100°F (32°C to 38°C)

Ventilation system settings table

Note: Ventilation can be installed only if humidification is not installed and *Dehumidifier Control* is not set to **Whole Home**.

System setting	Description	Factory default setting (bold) and setting range
Low Limit Outdoor Temp	Selects if ventilation is disabled when the outdoor temperature exceeds the outdoor low limit. (Only available if *Fresh Air Setup* is set to **Timed** and an outdoor temperature sensor is installed.)	**No** Yes
Outdoor Low Limit	Sets the low temperature limit for ventilation. (Only available if *Low Limit Outdoor Temp* is set to **Yes**.)	**10°F (-11°C)** -10°F to 30°F (-23°C to -1°C)
High Limit Indoor RH	Selects if ventilation is disabled when the indoor RH exceeds the indoor RH limit. (Only available if *Fresh Air Setup* is set to **Timed**.)	**No** Yes
Indoor RH Limit	Sets the high indoor RH limit for ventilation. (Only available if *High Limit Indoor RH* is set to **Yes**.)	**60%** 50% to 70%
Number of Bedrooms	Selects the number of bedrooms to be used for the ASHRAE calculation. (Only available if *Fresh Air Setup* is set to **ASHRAE**.)	**3 Bedrooms** 1 to 6 Bedrooms
Number of Occupants	Selects the number of occupants to be used for the ASHRAE calculation. (Only available if *Fresh Air Setup* is set to **ASHRAE**.)	**4 Occupants** 1 to 10 Occupants

Ventilation system settings table

Note: Ventilation can be installed only if humidification is not installed and *Dehumidifier Control* is not set to **Whole Home**.

System setting	Description	Factory default setting (bold) and setting range
Home Size	Selects the home size to be used for the ASHRAE calculation. If multiple ventilation systems are used, this should be set to the size of the zone that this thermostat is controlling. (Only available if *Fresh Air Setup* is set to **ASHRAE**.)	**2500 SQ FT** 1000 to 5000 SQ FT
Fresh Air CFM	Selects the ventilation CFM to be used for the ASHRAE calculation. (Only available if *Fresh Air Setup* is set to **ASHRAE**.)	**60 CFM** 30 to 200 CFM
Select Climate	Selects the climate to be used for the ASHRAE calculation. (Only available if *Fresh Air Setup* is set to **ASHRAE**.) To determine what region you are in, refer to the map on the following page.	**Normal** Very Hot/Humid Very Cold
ASHRAE Cycle Time	Displays the Fresh Air Time calculated by the ASHRAE standard. (Only displayed if *Fresh Air Setup* is set to **ASHRAE**.)	Minutes/Hour

Note: In ASHRAE setup, temperature and humidity limits are disabled.

Note: Refer to manuals for humidifier, dehumidifier, air cleaner, and ventilation products for recommended installation and operation.

Climate map for ASHRAE Fresh Air Setup

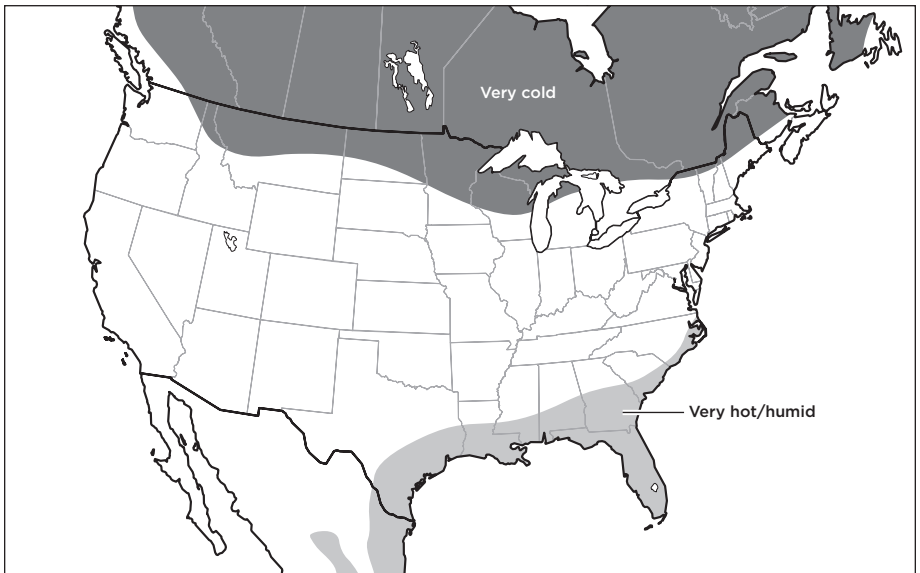

Managing the ZigBee network connection

The thermostat utilizes special button tap sequences for managing the ZigBee network connection. The button tap sequences are defined in the table. Button tap sequences that require a single (1) button should use the button on the top right of the thermostat. Button tap sequences requiring two (2) buttons should use the button and the button on the bottom right of the thermostat.

Function	Button Sequence
Identify	4
ZigBee Channel	7
Reboot	15
Factory Reset*	9-4-9
Leave Mesh and Reset*	13-4-13

**The thermostat's HVAC and Indoor Air Quality system settings will not be reset.*

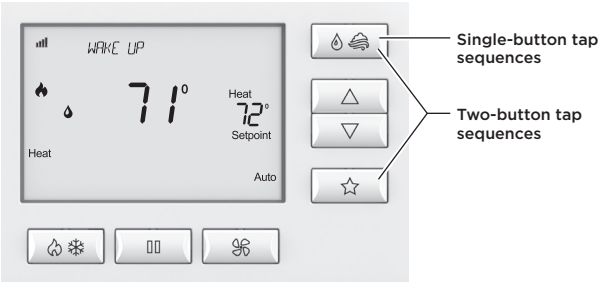

System Test menu

The System Test menu is used to test a system after installation. The outputs of the thermostat can be manually activated to test their function. The instructions below show how to enter the test mode and turn outputs on and off.

To use the System Test menu:

Press button to set the system to off.

Press and hold button to enter Installer Mode.

Press or buttons to select TEST.

Press button (Next) to enter Installer Test. The first screen of the installer test displays the equipment configuration.

Press button (Next) to enter the first installation test or button (Cancel) to exit.

System Test steps:

Heating equipment test
Cooling equipment test
Fan equipment test
Humidification equipment test
Dehumidification equipment test
Ventilation equipment test

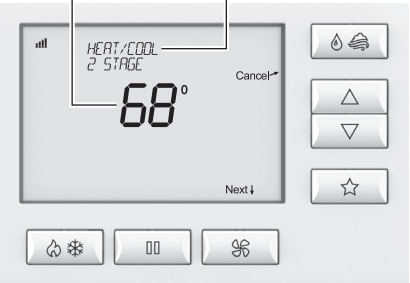

Each equipment test begins with the option of turning on the output or stage as shown below.

Press △ or ▽ button to change the selection.

Press button (Next) to accept the selection and proceed to the next step.

If **YES** is selected, the thermostat tests the corresponding output. If **NO** is selected, the thermostat proceeds to the next step.

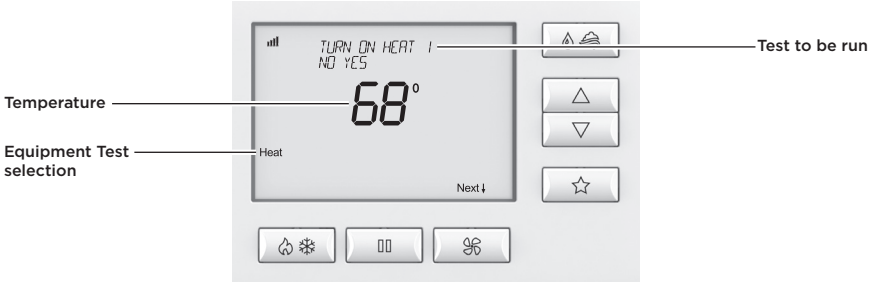

While the equipment test is active, the corresponding test information is shown.

Press button (Next) to accept the selection and proceed to the next test selection.

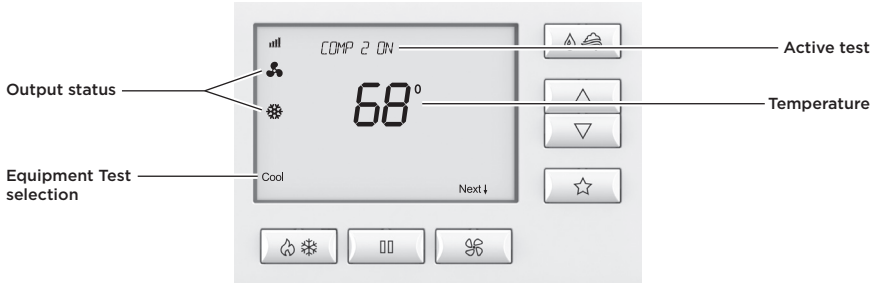

System Test tables

Heat/cool heating equipment test

Heat type		W	W2	Y	Y2	G
Gas	1st Stage Test	ON				
Gas	2nd Stage Test	ON	ON			
Electric	1st Stage Test	ON				ON
Electric	2nd Stage Test	ON	ON			ON

Heat pump heating equipment test (electric heat)

Compressor stages	Aux stages		W	W2	Y	Y2	O/B set to		G
							O	B	
1	1	1st Stage Test			ON			ON	ON
1	1	2nd Stage Test	ON		ON			ON	ON
2	1	1st Stage Test			ON			ON	ON
2	1	2nd Stage Test			ON	ON		ON	ON
2	1	3rd Stage Test	ON		ON	ON		ON	ON
1	2	1st Stage Test			ON			ON	ON
1	2	2nd Stage Test	ON		ON			ON	ON
1	2	3rd Stage Test	ON	ON	ON			ON	ON
2	2	1st Stage Test			ON			ON	ON
2	2	2nd Stage Test			ON	ON		ON	ON
2	2	3rd Stage Test	ON		ON	ON		ON	ON
2	2	4th Stage Test	ON	ON	ON	ON		ON	ON

Note: System variable 01, O/B operation selects O or B.

Heat pump heating equipment test (gas heat)

Compressor stages	Aux stages		W	W2	Y	Y2	O/B set to		G
							O	B	
1	1	1st Stage Test			ON			ON	ON
1	1	2nd Stage Test	ON					ON	
2	1	1st Stage Test			ON			ON	ON
2	1	2nd Stage Test			ON	ON		ON	ON
2	1	3rd Stage Test	ON					ON	
1	2	1st Stage Test			ON			ON	ON
1	2	2nd Stage Test	ON					ON	
1	2	3rd Stage Test	ON	ON				ON	
2	2	1st Stage Test			ON			ON	ON
2	2	2nd Stage Test			ON	ON		ON	ON
2	2	3rd Stage Test	ON					ON	
2	2	4th Stage Test	ON	ON				ON	

Note: System variable 01, O/B operation selects O or B.

Heat/cool cooling equipment test

	W	W2	Y	Y2	G
1st Stage Test			ON		ON
2nd Stage Test			ON	ON	ON

Heat pump cooling equipment test

	W	W2	Y	Y2	O/B set to		G
					O	B	
1st Stage Test			ON		ON		ON
2nd Stage Test			ON	ON	ON		ON

Note: System variable 01, O/B operation selects O or B.

Fan equipment test

W	W2	Y	Y2	G
				ON

Humidification equipment test

I1/I2	G
ON	ON

Dehumidification equipment test

I1/I2	G
ON	ON

Ventilation equipment test

I1/I2	G
ON	ON

Quick reference to controls and display

Home screen

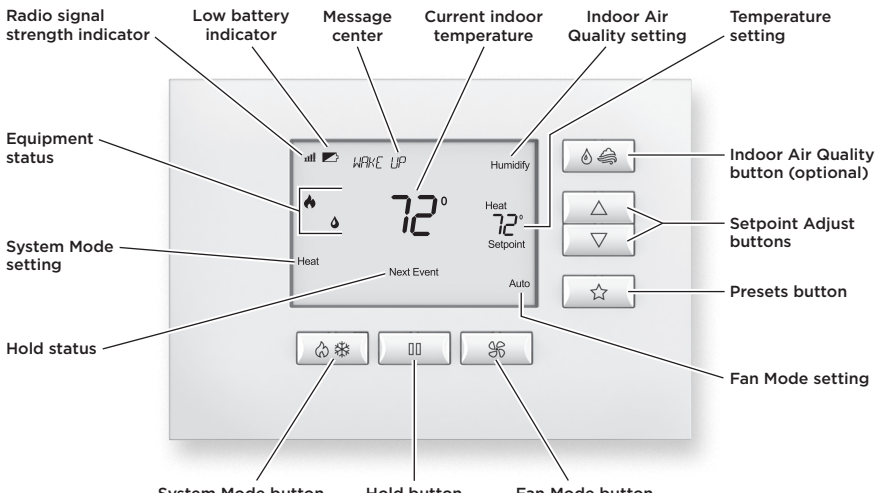

Note: Backlight is activated with the first button press and automatically turns off.

Troubleshooting

Display is blank

- Check the circuit breaker and reset it if necessary.
- Make sure the heating and cooling system's power switch is on.
- Make sure the furnace door is closed securely.
- If the thermostat is battery powered, make sure that fresh AA alkaline batteries are correctly installed.

Temperature settings do not change

Make sure heating and cooling temperatures are set to acceptable ranges:

- Heat: 40° to 90°F (4° to 32°C).
- Cool: 50° to 99°F (10° to 37°C).

Heating system does not respond (appears on screen)

- Check for 24VAC at the equipment on the secondary side of the transformer between power and common. If voltage is not present, check the heating equipment to find the cause of the problem.
- Check for 24VAC between the heat terminal (W) and the transformer common. If 24VAC is present, the thermostat is functional. Check the heating equipment to find the cause of the problem.
- Check for loose or broken wires between the thermostat and the heating equipment.

Cooling system does not respond (appears on screen)

- Check for 24VAC at the equipment on the secondary side of the transformer between power and common. If voltage is not present, check the cooling equipment to find the cause of the problem.
- Check for 24VAC between the cooling terminal (Y) and the transformer common. If 24VAC is present, the thermostat is functional. Check the cooling system to find the cause of the problem.
- Check for loose or broken wires between the thermostat and the cooling equipment.

Fan does not turn on in a call for heat

- Check System Setting 06 (Fan Control) to make sure the fan control is properly set to match the type of system (see page 22).

Heat pump issues cool air in heat mode or warm air in cool mode

- Check System Setting 01 (O/B Operation) to make sure the reversing valve operation matches the heat pump.

Heat/Cool both on at the same time

- Check the **Equipment Type** selection switch to make sure it is set to match the installed heating/cooling equipment (see page 21).
- Make sure the heating and cooling wires are not shorted together.

Heating equipment is running in cool mode

- Check the **Equipment Type** selection switch to make sure it is set to match the installed heating/cooling equipment (see page 21).

🔥 is not displayed

- Make sure that Installer System Setting number 02 (Control Setup) is set correctly.
- Change the *System Mode* to **Heat**, and set the temperature level above the current room temperature.

❄ is not displayed

- Make sure that Installer System Setting number 02 (Control Setup) is set correctly.
- Change the *System Mode* to **Cool**, and set the temperature level below the current room temperature.

Humidifier does not operate in Auto Mode

- Make sure that Installer System Setting number 16 (Outdoor Sensor) is set to **Yes**.
- Verify that the outdoor sensor is functioning correctly. If the sensor failed, you will see a “CHECK OUTDOOR SENSOR” message displayed in the message center.

Error codes

If the thermostat enters an error mode, all outputs are turned off. The thermostat attempts to recover every 10 minutes.

Error code	Message	Error Description
01	“SENSOR ERROR”	Primary sensor failure with no secondary sensor assigned.
02		Primary and secondary sensor failure.
03	“EEPROM ERROR”	Error in permanent memory.

Thermostat features

- Up to 4 stage heat and 2 stage cool operation.
- Indoor air quality control.
  - Humidification (automatic or manual control).
  - Dehumidification.
  - Event-Based™ air cleaning.
  - Ventilation with temperature and humidity limits.
- Temperature control.
- Message center provides feedback and instructions.
- Dual power option (24VAC or battery).
- Air filter, humidifier, dehumidifier, and HVAC service reminders.
- Programmable fan control with fan circulation mode.
- Easy-to-use temperature control can override program schedule at any time.
- Progressive recovery ensures proper temperature at the start of a program event.
- Built-in compressor protection prevents damage to your equipment.
- System test mode.

Specifications

Environment	
Temperature	Operating: 32° to 120°F (0° to 48.9°C) Shipping: -30° to 150°F (-34.4° to 65.5°C)
Relative humidity	Operating: 5% to 90% R.H. (non-condensing)

Electrical	
Operating voltage	24VAC (19.2–28.8VAC)
Current	Maximum: 2.5A (total), 1.0A (single output) Maximum surge current: 5A
Power supply	Dual power. Can be battery or 24VAC powered. When both sources are available, the battery is used as backup power.
Battery power	Battery power: AA size alkaline battery x 4 Battery life: Approximately 12 months

Thermal	
Outdoor and Remote temperature sensor	Maximum distance: 300 feet (about 100 meters)
Room temperature measurement	Display range: 32° to 99°F (0° to 40°C)
Outdoor temperature measurement	Display range: -40° to 130°F (-40° to 55°C)
Setpoint temperature range	Heat: 40° to 90°F (4° to 32°C) Cool: 50° to 99°F (10° to 37°C)
Setpoint humidity range	Humidification: 10% to 50% R.H. Dehumidification: 40% to 90% R.H.

U.S. Patent Number 8,146,376 (and other patents pending).

Control4™

Better. Together.™

control4.com | 888.400.4070

61001048 B2206227B 2.14

Regulatory Compliance & Safety Information for Contol4 Model C4-THERM-XX.

USA & Canada Compliance

FCC Part 15, Subpart B Unintentional Emissions Interference Statement

This equipment has been tested and found to comply with the limits for a Class B digital device, pursuant to Part 15 of the FCC rules. These limits are designed to provide reasonable protection against harmful interference when the equipment is operated in a residential installation. This equipment generates uses and can radiate radio frequency energy and, if not installed and used in accordance with the instructions, may cause harmful interference to radio communications. However, there is no guarantee that interference will not occur in a particular installation. If this equipment does cause harmful interference to radio or television reception, which can be determined by turning the equipment off and on, the user is encouraged to try to correct the interference by one or more of the following measures:

- Reorient or relocate the receiving antenna.
- Increase the separation between the equipment and receiver.
- Connect the equipment into an outlet on a circuit different from that to which the receiver is connected.
- Consult the dealer or an experienced radio/TV technician for help.

FCC Partie 15, sous-section B Unintentional Déclaration sur les interférences des émissions

Cet équipement a été testé et jugé conforme aux limites établies pour un dispositif numérique de classe B, conformément à la Partie 15 des règlements de la FCC. Ces limites sont conçues pour fournir une protection raisonnable contre les interférences nuisibles lorsque l'équipement est utilisé dans une installation résidentielle. Cet équipement génère, utilise et peut émettre de l'énergie rayonnent fréquence et, s'il n'est pas installé et utilisé conformément aux instructions, il peut causer des interférences nuisibles aux communications radio. Cependant, il n'existe aucune garantie que des interférences ne se produiront pas dans une installation particulière. Si cet équipement provoque des interférences nuisibles à la réception radio ou télévision, ce qui peut être déterminé en mettant l'équipement hors et sous tension, l'utilisateur est encouragé à essayer de corriger l'interférence par une ou plusieurs des mesures suivantes:

- Réorienter ou déplacer l'antenne de réception.
- Augmenter la distance entre l'équipement et le récepteur.
- Connecter l'équipement à une prise sur un circuit différent de celui sur lequel le récepteur est branché.
- Consulter le revendeur ou un technicien radio / télévision qualifié pour obtenir de l'aide.

This device complies with part 15 of the FCC rules and Industry Canada's licence-exempt RSS-GEN. Operation is subject to the following two conditions: (1) This device may not cause harmful interference, and (2) this device must accept any interference received, including interference that may cause undesired operation.

Le présent appareil est conforme partie 15 des règles de la FCC et aux RSS-GEN d'Industrie Canada applicables aux appareils radio exempts de licence. L'exploitation est autorisée aux deux

conditions suivantes : (1) l'appareil ne doit pas produire de brouillage, et (2) l'utilisateur de l'appareil doit accepter tout brouillage radioélectrique subi, même si le brouillage est susceptible d'en compromettre le fonctionnement.

IMPORTANT! Any changes or modifications not expressly approved by the party responsible for compliance could void the user's authority to operate this equipment.

IMPORTANT! Tous les changements ou modifications pas expressément approuvés par la partie responsable de la conformité ont pu vider l'autorité de l'utilisateur pour actionner cet équipement.

FCC Part 15, Subpart C / RSS-210 Intentional Emissions Interference Statement

Compliance of this equipment is confirmed by the following certification numbers that are placed on the equipment:

Notice: The term "FCC ID:" and "IC" before the certification number signifies that FCC and Industry Canada technical specifications were met.

FCC ID: R33C4THERM
IC: 7848A-C4THERM

This equipment must be installed by qualified professionals or contractors in accordance with FCC Part 15.203 & IC RSS-210, Antenna Requirements. Do not use any antenna other than the one provided with the unit.

FCC Partie 15, sous-partie C / RSS-210 Déclaration volontaire des émissions interférences

Conformité de cet appareil est confirmé par les chiffres de certification suivants qui sont placés sur l'équipement:

Avis: Le terme "FCC ID:" and "IC" avant le numéro de certification signifie que la FCC et Industrie Canada ont été respectées.

FCC ID: R33C4THERM
IC: 7848A-C4THERM

Cet équipement doit être installé par des professionnels qualifiés ou entrepreneurs conformément aux normes FCC partie 15.203 & IC RSS-210, Exigences d'antenne. Ne pas utiliser une antenne autre que celui fourni avec l'appareil.

RF Radiation Exposure Statement

This equipment complies with the FCC/IC radiation exposure limits set fourth for portable transmitting devices operation in an uncontrolled environment. End users must follow the specific operating instructions to satisfy RF exposure compliance.

- The equipment should only be used or installed at locations where there is normally at least a 20cm separation between the antenna and all persons.
- This transmitter must not be co-located or operation in conjunction with any other antenna or transmitter.
- Any changes or modifications not expressly approved by the party responsible for compliance could void the user's authority to operate this equipment.

Déclaration d'exposition aux radiations RF
Cet équipement est conforme aux limites FCC / IC d'exposition aux rayonnements définies quatrième opération appareils portables transmettre dans un environnement non contrôlé. Les

utilisateurs finaux doivent suivre les instructions de fonctionnement spécifiques pour satisfaire la conformité aux expositions RF.

- L'appareil ne doit être utilisé ou installé à des endroits où il ya normalement au moins une séparation de 20 cm entre l'antenne et toute personne.
- Cet émetteur ne doit pas être co-localisés ou fonctionnement en conjonction avec une autre antenne ou un autre émetteur.
- Tout changement ou modification non expressément approuvé par la partie responsable de la conformité pourraient annuler l'autorité de l'utilisateur à utiliser cet équipement.

European Compliance

Conformity of the equipment with the guidelines below is attested by the application of the CE mark.

CE Declaration of Conformity

Manufacturer's Name:	CONTROL4 CORPORATION
Manufacturer's Address:	11734 S. ELECTION ROAD SUITE 200 SALT LAKE CITY UT 84020 USA
EU Representative Name:	CONTROL4 EMEA LIMITED
EU Representative Address:	UNIT3, GREEN PARK BUSINESS CENTRE SULTON-ON-THE FOREST YORK YO61 IET, UNITED KINGDOM
Product Name(s):	Wireless Thermostat
Brand:	Contol4
Model(s):	C4-THERM-XX

Product Standard(s) to which Conformity of the Council Directive(s) is declared:

EMC - 2004/108/EC "Electromagnetic Compatibility (EMC) Directive":
(Emissions) EN 55022:2010, **(Immunity)** EN 55024:2010, EN 301 489-1:2008, EN 301 489-17:2009, EN 61000-3-2:2006 + A1:2009 + A2:2009 & EN 61000-3-3:2008

Telecom & Radio - 1999/5/EC Radio equipment and Telecommunications Terminal Equipment (R&TTE) Directive:
EN 300 328 V1.7.1 (2006-10)

RoHS - 2011/65/EU Restriction of the Use of certain Hazardous Substances in Electrical and Electronic Equipment (EEE) & WEEE - 2002/96/EC Waste of Electrical and Electronic Equipment (EEE).

We, the undersigned, hereby declare that the equipment specified above conforms to the above directives and standards. Date of Issue: January 9, 2015

Legal Representative

Signature

Roger Midgley
Sr. Regulatory Compliance Engineer

Recycling

Control4 understands that a commitment to the environment is essential for a health life and sustainable growth for future generations. We are committed to supporting the environmental standards, laws, and directives that have been put in place by various communities and countries that deal with concerns for the environment. This commitment is represented by combining technological innovation with sound environmental business decisions.

WEEE Compliance

Control4 is committed to meeting all requirements of the Waste Electrical and Electronic Equipment (WEEE) directive (2002/96/EC). The WEEE directive requires the manufacturers of electrical and electronic equipment who sell in EU countries: (1) label their equipment to notify customers that it needs to be recycled, and (2) provide a way for their products to be appropriately disposed of or recycled at the end of their product lifespan. For collection or recycling of Control4 products, please contact your local Control4 representative or dealer.

About this Document

Copyright © 2015 Control4 Corporation. All rights reserved. Control4 and the Control4 logo are registered trademarks or trademarks of Control4 Corporation in the United States and/or other countries.

Part Number 200-40003 Rev B, 1/9/2015