T3 Series Tabletop Touch Screens
Installation Guide

Supported models

- C4-TT7-1-xx 7″ Tabletop Touch Screen (black, white, or red)
- C4-TT10-xx 10″ Tabletop Touch Screen (black or white)

Introduction

The Control4® T3 Series Tabletop Touch Screens offer complete system control in an elegant, compact, and portable design. The touch screens are equipped with a full capacitive screen, audio and video Intercom (with the built-in camera) using SIP, and more.

This touch screen can be located anywhere, and the convenient recharging station enables it to be used as either a tabletop or portable interface. Choose from four installation options:

- **Option 1: PoE data and power.** Ethernet network connection and power are provided through a PoE injector. No additional wiring is needed.
- **Option 2: Ethernet data and AC power.** Ethernet network connection is provided through an Ethernet cable, and power is provided through the AC power adapter.
- **Option 3: WiFi data and AC power.** WiFi is used as the network connection, and power is provided through the AC power adapter.
- **Option 4: WiFi data and PoE power.** WiFi is used as the network connection, and power is provided through a PoE injector.

Note: 802.11b is not recommended for Video Intercom. We recommend using Wireless-N. See “Specifications” and “Power and Network Installation Options” for more information.

Box contents

- Tabletop Touch Screen
- Recharging station
- Warranty card
- Ferrites (10″ model only)

Accessories available for purchase

- Control4 PoE Injector, sold separately (AC-POE1-B).

Warnings

Warning! This product must be grounded in accordance with the National Electrical Code (NEC) requirements.

Avertissement ! Ce produit doit être fondu selon les conditions électriques nationales de code (NEC).

Caution! Do not place the touch screen near sources of heat or expose to direct sunlight for an extended time.

Avertissement ! Ne placez pas l’unité près des sources de chaleur ou exposition pour diriger la lumière du soleil pendant une période prolongée.

Caution! This product generates heat. The room must have adequate ventilation or the ability to dissipate heat effectively.

Avertissement ! Ce produit produit de la chaleur. La salle doit avoir à ventilation proportionnée ou la capacité d’absorber la chaleur efficacement.

Caution! Use this product only in dry locations.

Avertissement ! Employez ce produit seulement dans des endroits secs.

Caution! This product is for residential use only.

Avertissement ! Ce produit est pour à l’usage résidentiel ou commercial seulement.

Caution! Do not use pens or sharp objects to navigate or make selections on the touch screen. To select an item or scroll through a list, use your fingertip.

Avertissement ! N’employez pas les stylos ou les objets pointus pour diriger ou pour faire des choix sur l’écran. Pour choisir un article ou un rouleau par une liste, employez votre bout du doigt.

Caution! Improper use or installation can cause DAMAGE OF PROPERTY.

Avertissement ! L’utilisation ou l’installation inexacte peut causer DAMAGE DE PROPRIÉTÉ.

Caution! Do not use shielded Ethernet cable. Doing so will void the warranty.

Attention ! Ne pas utiliser de câble Ethernet blindé . Cela annulera la garantie.

Important! Using this product in a manner other than outlined in this document voids your warranty. Further, Control4 is NOT liable for any damage incurred with the misuse of this product. See “Warranty.”

Specifications and requirements

Specifications

Model Numbers	C4-TT7-1-BL, C4-TT7-1-WH, C4-TT7-1-RD, C4-TT10-BL, C4-TT10-WH
Screen	Resolution: 1280 × 800, capacitive touch Camera: 720p
Network	Ethernet or WiFi (802.11g/n [2.4 GHz]) Security: WEP, WPA/WPA2 PSK, 802.1x EAP, PEAP Notes: (1) While technically the touch screen can use 802.11b, 802.11b is not supported. (2) 802.11n is recommended for best performance. Even with 802.11n, broadcasting to several devices will degrade Video Intercom response time and images. Broadcasting to additional devices will further degrade performance. See "Wireless Network Limitations."
Power supply	PoE (IEEE 802.3af) 13W peak; 44-57VDC; 10W @ 44VDC = 0.22A 100-240VAC, 50/60 Hz International power supply adapters included
Operating temperature	32 ~ 104˚F (0˚ ~ 40˚C)
Storage temperature	4 ~ 158˚F (-20˚ ~ 70˚C)
Charging station connections	RJ-45 (PoE, Ethernet) 5VDC power
Dimensions (W×H×D)	7″ Touch screen: 7.0 × 5.1 × 0.75″ (178 × 130 × 19 mm) 7″ Charging station: 4.17 × 3.11 × 2.21″ (106 × 79 × 56 mm) 10″ touch screen: 9.65 × 6.77 × 0.91″ (245 × 172 × 23 mm) 10″ dock: 4.53 × 4.02 × 2.60″ (115 × 102 × 66 mm)
Weight	7″ Touch screen: 0.7 lbs. (0.32 kg) 7″ charging station: 0.8 lbs. (0.36 kg) 10″ Touch screen: 1.35 lbs. (0.60 kg) 10″ charging station: 1.05 lbs. (0.46 kg)

Requirements

- A controller fully installed and configured with Control4 OS 2.7.2 or later. For the 10″ model, Control4 OS 2.8.0 or later is recommended.
- If using Ethernet data:
  - Ethernet network installed and available that includes a gateway/router/switch.
  - One Ethernet cable that runs from the Ethernet gateway/router/switch to the touch screen
- If using WiFi data:
  - Wireless network (WiFi 802.11b/g/n) installed and available with a wireless access point (WAP). Security can be WEP, WPA/WPA2 PSK, 801.1x EAP, PEAP.
- If using PoE power:
  - Control4 PoE Injector (model #AC-POE1-B) or another third-party PoE Injector or switch (UL/ANSI certified).
  - Two *unshielded* Ethernet CAT5/6 cables: (1) one that runs from the Ethernet gateway/router/switch to the PoE Injector/switch and (2) one that runs from the PoE injector/switch to the Ethernet connection in the touch screen's wall box.
- If using AC power:
  - Access to AC power outlet (AC power adapter included)
  - Wireless network (WiFi 802.11b/g/n) installed and available with a wireless access point (WAP). Security can be WEP, WPA/WPA2 PSK, 801.1x EAP, PEAP.
  - Access to AC power outlet (AC power adapter included)

Views

Front

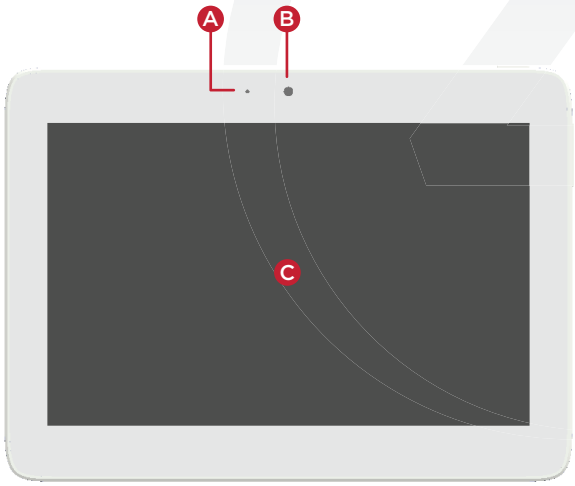

A Camera LED
B Camera
C 7″ diagonal, capacitive 1280 × 800 display

Back

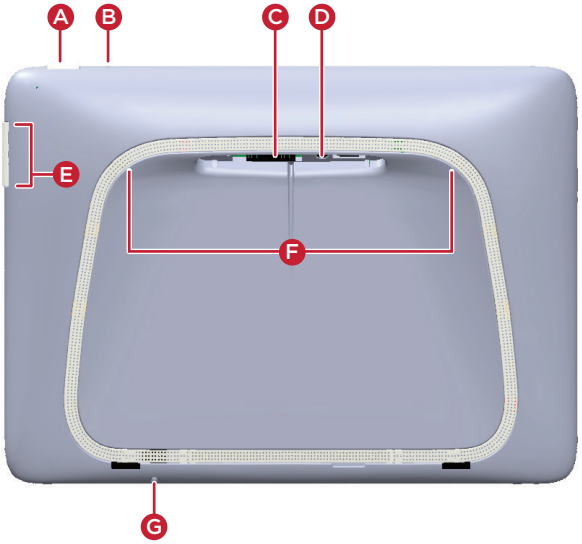

A Power button. Press and release to toggle screen on/off, press and hold to reboot (if attached to charging station) or turn off (if detached from charging station)
B Reset button (recessed). Use a straightened paper clip to press and release to reboot (if attached to charging station) or turn off (if detached from charging station)
C Docking connector
D Screw hole for permanently mounting charging station
E Volume buttons
F Stereo speakers
G Microphone

Charging station bottom

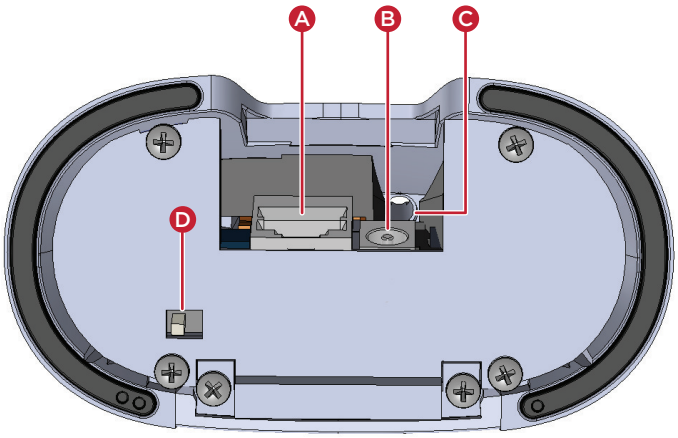

A Ethernet/PoE connector
B 5VDC power connector
C Screw hole for permanently attaching station to screen
D Control4 logo LED switch—Controls the LED on the front of the charging station.

Touch screen placement

Place the touch screen's charging station on any level surface.

Note: Consider the angle of the touch screen's camera and the sitting or standing position of the people who will use it while it's on the charging station.

Power and network installation options

This device uses an Ethernet or WiFi network connection, and can be powered using PoE or the AC power adapter.

Choose one of the following options to install the power and network communication.

Caution! Do not attempt to use PoE and AC power at the same time. Choose only one power option.

Attention ! Ne pas tenter d'utiliser PoE et AC en même temps. Choisir une seule option d'alimentation.

Option 1: Ethernet data with PoE power

A PoE injector supplies power and a network connection on the Ethernet cable.

Note: This installation is for a tabletop mount only, and not for portable use. Removing the touch screen from the charging station will disconnect the network.

To set up your PoE and Ethernet connection with a PoE injector:

1. Attach the PoE Injector according to the instructions in your PoE's installation guide. See "Connecting PoE" below.
2. Pull the Ethernet cable from that location to the touch screen's charging station, then connect it to the charging station.
3. Install the included ferrite about 6″ (15 cm) from the end of the cable that connects to the charging station.
4. For mounting, see "Tabletop-only" under "Mounting options" below.

Option 2: Ethernet data with AC power

The Ethernet cable connects directly to the network switch. The charging station must have access to an AC power outlet.

Note: This installation is for a tabletop mount only, and not for portable use. Removing the touch screen from the charging station will disconnect the network.

To set up your Ethernet connection with AC power:

1. Place the screen's charging station near a power outlet.
1. Connect an Ethernet cable to the charging station and the network switch.
2. Install the included ferrite about 6″ (15 cm) from the end of the cable that connects to the charging station.
3. Connect the AC power adapter to a power outlet and the charging station.
4. For mounting, see "Tabletop-only" under "Mounting options" below.

Option 3: WiFi data with AC power

The data connection uses WiFi, so the touch screen can be positioned anywhere in the home with a strong WiFi signal. The charging station must have access to an AC power outlet.

To set up your WiFi connection and AC power:

1. Make sure you have WiFi working in the home, and place the screen's charging station near a power outlet.
2. Connect the AC power adapter to a power outlet and the charging station.
3. For mounting, see "Portable" under "Mounting options" below.
4. See "Configure the touch screen for wireless" below.

Notes: (1) Video Intercom. Although this device supports 802.11b/g/n, 802.11 b is not recommended for Video Intercom use. (2) We recommend Wireless-N for best performance.

Wireless Network Limitations: Many WiFi access points handle Multicasts (WiFi simultaneously sent to multiple devices, for example, when the touch screen broadcasts video to all stations) by slowing down transmission speed to the 1 Mb basic rate. This can cause overall WiFi congestion in the WiFi network during the broadcast. Video Intercom response times and images may degrade at each device.

If a home requires a large number of WiFi Video Intercom devices, ensure that you have a robust WiFi network (possibly consisting of multiple access points).

Option 4: WiFi data with PoE power

The data connection uses WiFi, so the touch screen can be positioned anywhere in the home with a strong WiFi signal. The charging station must have access to a PoE cable.

To set up your WiFi connection with PoE power:

1. Attach the PoE Injector according to the instructions in your PoE's installation guide. See "Connecting PoE" below.
2. Install the included ferrite about 6″ (15 cm) from the end of the cable that connects to the charging station.

3 Make sure you have WiFi working in the home, and place the screen's charging station near a power outlet.

4 For mounting, see "Portable" under "Mounting options" below.

5 See "Configure the touch screen for wireless" below.

Connecting PoE

Connect the PoE injector to power and the network, and then connect it to the screen's charging station. These instructions are for the Control4 PoE Injector (AC-POE1-B).

Important: The equipment is to be connected only to PoE networks without routing to the outside plant.

To install a Control4 PoE injector:

1 Connect the Control4 PoE injector to an AC outlet using the power cord.

2 Connect one of the RJ-45 LAN ports on the gateway/router/switch to the PoE Injector's **LAN** port using CAT5/6 Ethernet cable.

3 Connect the PoE Injector's **PWR LAN-OUT** port to the RJ-45 Ethernet cable that will be connected to the touch screen's charging station.

4 Connect the PoE Ethernet cable to the charging station.

Attaching the ferrite (10″ model only)

To attach the ferrite:

1 If using the AC power adapter, and there is not already a ferrite (bump in the cable) installed, attach the small ferrite on the adapter's power cable near the adapter.

2 If using PoE or Ethernet, attach the large ferrite close to the end of the cable nearest the charging station.

Configure the touch screen for wireless (optional)

To configure the touch screen for wireless:

1 After initialization, tap **Network**. The network configuration page opens.

2 Under *Wi-Fi*, tap or slide **OFF/ON** to enable WiFi, then tap the **Wi-Fi** field to open a list of available networks.

3 Tap the network name you want to connect to.

4 Tap the **Password** field, then use the on-screen keyboard to type the password (if required).

Note: If you need to enter a static IP address, follow the instructions under "To set a wireless static IP address" below before proceeding.

5 Tap **Connect**.

If you don't see the network you want:

1 Tap **+**, then tap the **Network SSID** field and type the SSID (name) of the network by using the on-screen keyboard.

2 Tap the **Security** field, then select the type of security to use.

3 Tap the **Password** field, then use the on-screen keyboard to type the password (if required).

Note: If you need to enter a static IP address, follow the instructions under "To set a wireless static IP address" below before proceeding.

4 Tap **Save**. The new network is added to the bottom of the network list.

To set a wireless static IP address:

1 Scroll down and tap **Show advanced options**.

2 Tap **IP settings**, then tap **Static**.

3 Select each box one at a time and use the on-screen keyboard to type the:

- **IP address**
- **Gateway**
- **Network prefix length**
- **DNS 1** (preferred)
- **DNS 2** (alternate)

Configure the touch screen for Ethernet

If you want to use DHCP (default) for your Ethernet connection, no further setup is required.

To configure a static IP address for Ethernet:

1 After initialization, tap **Network**. The network configuration page opens.

2 Tap **Ethernet**. The Ethernet settings screen opens.

3 Tap **Static IP Settings**, then tap **Use static IP**.

4 Select each box one at a time and use the on-screen keyboard to type the **IP Address**, **Gateway**, **Netmask**, **DNS 1** (preferred), and **DNS 2** (alternate).

5 Tap **SAVE** when finished.

Add and configure in Composer Pro

After the touch screen is installed and appears on the home network, use Composer Pro to add it to the Control4 system and configure it.

Use the Composer Pro *System Design* and *Connections* views to add and configure this device.

To add and configure a T3 touch screen to a project:

1. Add the **T3 Tabletop Touch Screen** driver to your project.
2. Identify the device to the project, select the touch screen in Composer Pro's **Connections** > **Network** view, click **Identify**, then tap **Identify** on the touch screen.
3. To configure the properties, select the touch screen in the **System Design** view, then view and change the properties in the *Properties* pane as needed.

   Properties include:

   - **Network Connection**—Reports the touch screen's current network connection type.
   - **Back Light**—Click the arrows or type numbers to set the light level, then click **Set**.

   Advanced properties include:

   - **Enable Camera**—Allows you to enable or disable the camera.

   Intercom (nested under the touch screen) properties:

   - **Appearance**—Select to hide the touch screen from appearing in Navigators as an available device.
   - **Behavior**—Select the modes you want this touch screen to support.
   - **Audio Control**—Select the volume of individual audio settings.
   - **Sip Information**—Information for integrating the touch screen into your SIP/VoIP system.
   - **Custom Buttons**—Select to enable and label the two available custom buttons.
   - **Alternate Camera**—Select to use an external camera for the video associated with the touch screen, for example, a security camera mounted to the side of the entrance and pointing at the door.

Mounting options

Place the charging station on any level surface. Consider the angle of the touch screen's camera and the position of the people who will use it while it's on the charging station.

Portable

You can set the touch screen onto the charging station for recharging and tabletop use, and lift the screen from the charging station for portable use. For this option, make sure the data connection is WiFi (see "Power and network installation options" above).

Tabletop only

For security purposes, you can permanently attach the charging station to the touch screen. For this option, we recommend using Ethernet or PoE for the data connection.

Use of the screw in the 10" is not recommended without the use of the mounting bracket (coming soon).

To permanently attach the charging station:

1. Disconnect any cables from the charging station.
2. While holding the charging station upside-down, insert the mounting screw (included) through the mounting base and up through the mounting hole in the top.

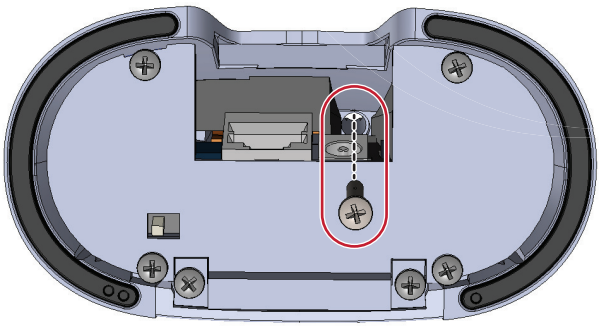

3. Align the screw with the screw hole in the back of the touch screen, then tighten to secure it in place.

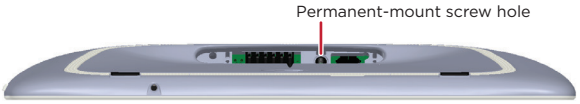

Troubleshooting

To power cycle the touch screen:

1 Press and hold the ⏻ (power) button for several seconds until the touch screen turns off.

2 Press and release the ⏻ (power) button again to turn on.

To perform a factory data reset:

1 On the touch screen's main screen, tap **Settings**, **System Info**, then **Factory data reset**.

- OR -

If the touch screen has not yet been configured, tap **About**, then **Factory data reset**.

- OR -

To reset without using the display screen:

a Dock the touch screen onto its charging station.

b Press and hold the volume up button while using a straightened paper clip to press and release the reset button.

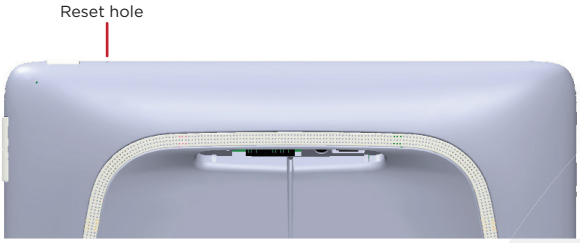

c Keep holding down the volume up button until the icon below appears on the screen, then release the button.

d A message appears, indicating that data is being erased.

Additional resources

The following resources are available for more support.

- Control4 Knowledgebase and forums
- Control4 Technical Support
- Control4 website: ***www.control4.com***
- Composer documentation available at ***ctrl4.co/docs***.

For the latest version of this document, open this URL or scan the QR code on a device that can view PDFs.

MOST RECENT VERSION

ctrl4.co/tt-ig

Regulatory/Safety Information

To review regulatory information for your particular Control4 products, see the information located on the Control4 website at ***ctrl4.co/reg***.

Patent information

Applicable patents are available at ***ctrl4.co/patents***.

Warranty

Visit ***ctrl4.co/warranty*** for details.

Control4

control4.com | 888.400.4070

Copyright ©2015, Control4 Corporation. All rights reserved. Control4, the Control4 logo, the 4-ball logo, 4Store, 4Sight, Control My Home, Everyday Easy, and Mockupancy are registered trademarks or trademarks of Control4 Corporation in the United States and/or other countries. All other names and brands may be claimed as the property of their respective owners. All specifications subject to change without notice.

D
200-00389-D
2015-12-10 MS

Regulatory Compliance & Safety Information for Contol4 Model C4-TT10-WH & C4-TT10-BL

Electrical Safety Advisory
Sécurité électrique consultatif

Important Safety Information

Informations de sécurité importantes

Read the safety instructions before using this product.
Lisez les consignes de sécurité avant d'utiliser ce produit.

1. Read these instructions.
1. Lisez ces instructions.

2. Keep these instructions.
2. Conservez ces instructions.

3. Heed all warnings.
3. Respectez tous les avertissements.

4. Follow all instructions.
4. Suivez toutes les instructions.

5. Do not use this apparatus near water.
5. Ne pas utiliser cet appareil près de l'eau.

6. Clean only with dry cloth.
6. Nettoyez-le uniquement avec un chiffon sec.

7. Do not block any ventilation openings. Install in accordance with the manufacturer's instructions.
7. Ne pas bloquer les ouvertures de ventilation. Installer conformément aux instructions du fabricant.

8. Do not install near any heat sources such as radiators, heat registers, stoves, or other apparatus (including amplifiers) that produce heat.
8. Ne pas installer près de sources de chaleur telles que des radiateurs, registres de chaleur, poêles, ou autres appareils (incluant les amplificateurs) qui produisent de la chaleur.

9. Do not defeat the safety purpose of the polarized or grounding-type plug. A polarized plug has two blades with one wider than the other. A grounding type plug has two blades and a third grounding prong. The wide blade or the third prong is provided for your safety. If the provided plug does not fit into your outlet, consult an electrician for replacement of the obsolete outlet.
9. Ne pas contourner le dispositif de sécurité de la fiche polarisée ou de mise à la terre. Une fiche polarisée possède deux lames dont une plus large que l'autre. Une fiche de terre a deux lames et une troisième broche de terre. La lame large ou la troisième broche est

fournie pour votre sécurité. Si la fiche fournie ne s'adapte pas à votre prise, consultez un électricien pour le remplacement de la prise obsolète.

10. Protect the power cord from being walked on or pinched particularly at plugs, convenience receptacles, and the point where they exit from the apparatus.
10. Protégez le cordon d'alimentation ne soit piétiné ou pincé, en particulier au niveau des fiches, des prises et au point où il sort de l'appareil.

11. Only use attachments/accessories specified by the manufacturer.
11. Utilisez uniquement des fixations / accessoires spécifiés par le fabricant.

12. Use only with the cart, stand, tripod, bracket, or table specified by the manufacturer, or sold with the apparatus. When a cart is used, use caution when moving the cart/apparatus combination to avoid injury from tip-over.
12. Utilisez uniquement avec le chariot, le socle, le trépied, le support ou la table spécifiés par le fabricant ou vendu avec l'appareil. Lorsque vous utilisez un chariot, soyez prudent lorsque vous déplacez l'ensemble chariot / appareil pour éviter des blessures dues au renversement.

13. Unplug this apparatus during lightning storms or when unused for long periods of time. This equipment uses AC power which can be subjected to electrical surges, typically lightning transients which are very destructive to customer terminal equipment connected to AC power sources. The warranty for this equipment does not cover damage caused by electrical surge or lightning transients. To reduce the risk of this equipment becoming damaged it is suggested that the customer consider installing a surge arrestor.
13. Débranchez cet appareil pendant les orages ou lorsqu'il n'est pas utilisé pendant de longues périodes de temps. Cet équipement utilise la puissance AC qui peuvent être soumis à des surtensions électriques, la foudre généralement transitoires qui sont très destructives envers les équipements terminaux connectés à des sources d'alimentation CA. La garantie de cet appareil ne couvre pas les dommages causés par les surtensions électriques ou transitoires de foudre. Pour réduire le risque de cet équipement devient endommagé, il est suggéré que le client envisager l'installation d'un limiteur de surtension.

14. Refer all servicing to qualified service personnel. Servicing is required when the apparatus has been damaged in any way, such as power-supply cord or plug is damaged, liquid has been spilled or objects have fallen into the apparatus, the apparatus has been exposed to rain or moisture, does not operate normally, or has been dropped.
14. Confiez toutes les réparations à un personnel qualifié. Une réparation est nécessaire lorsque l'appareil a été endommagé de quelque façon que ce soit le cordon d'alimentation ou la fiche est endommagé, du liquide a été renversé ou si des objets sont tombés dans l'appareil, l'appareil a été exposé à la pluie ou à l'humidité, ne fonctionne pas normalement , ou s'il est tombé.

15. Use the circuit breaker to disconnect the apparatus from the AC mains. The circuit breaker shall remain readily accessible.
15. Utiliser le disjoncteur pour déconnecter l'appareil de l'alimentation secteur. Le disjoncteur doit rester facilement accessible.

16. To completely disconnect unit power from the AC mains, turn off the circuit breaker. To reconnect power, turn on the circuit breaker following all safety instructions and guidelines.

16. Pour couper entièrement l'alimentation appareil de l'alimentation secteur, éteignez le disjoncteur. Pour rétablir le courant, mettez le disjoncteur après les consignes de sécurité et des lignes directrices.

17. This product relies on the buildings installation for short-circuit (overcurrent) protection. Ensure that the protective device is rated not greater than: 20A.
17. Ce produit repose sur l'installation des bâtiments pour les courts-circuits (surintensité) de protection. Assurez-vous que le dispositif de protection est assignée ne dépassant pas: 20A.

18. **CAUTION**: As with all batteries, there is a risk of explosion or personal injury if the battery is replaced by an incorrect type. Dispose of used battery according to the instructions of the battery manufacturer and applicable environmental guidelines. Do not open, puncture or incinerate the battery, or expose it to conducting materials, moisture, liquid, fire or heat above 54° C or 130° F.
18. ATTENTION: Comme avec toutes les batteries, il ya un risque d'explosion ou de blessure si la batterie est remplacée par un type incorrect. Éliminez les batteries usagées selon les instructions du fabricant de la batterie et applicables des directives environnementales. Ne pas ouvrir, percer ou incinérer la batterie, ou de l'exposer à des matériaux conducteurs, de l'humidité, du liquide, un incendie ou une température supérieure à 54 ° C ou 130 ° F.

19. Never push objects of any kind into this product through cabinet slots as they may touch dangerous voltage points or short out parts that could result in fire or electric shock.
19. N'introduisez jamais d'objets d'aucune sorte dans ce produit à travers les fentes du boîtier car ils pourraient toucher des points de tension dangereux ou court-circuiter des pièces qui pourraient entraîner un incendie ou un choc électrique.

20. This product can interfere with electrical equipment such as tape recorders, TV sets, radios, computers and microwave ovens if placed in close proximity.
20. Ce produit peut interférer avec des appareils électriques tels que les magnétophones, téléviseurs, radios, ordinateurs et fours à micro-ondes si placés à proximité.

The lightning flash and arrow head within the triangle is a warning sign alerting you of dangerous voltage inside the product
L'éclair et la flèche dans le triangle est un signe d'alerte pour vous avertir d'une tension dangereuse à l'intérieur du produit

Caution: To reduce the risk of electric shock, do not remove cover (or back). No user serviceable parts inside. Refer servicing to qualified service personnel.
Attention: Pour réduire le risque de choc électrique, ne pas retirer le couvercle (ou l'arrière). Aucune pièce réparable par l'utilisateur. Confiez l'entretien à un personnel qualifié.

The exclamation point within the triangle is a warning sign alerting you of important instructions accompanying the product.
Le point d'exclamation dans un triangle est un signe d'avertissement vous signale des instructions importantes accompagnant le produit.

See marking on bottom / back of product
Voir le marquage sur les bas / dos du produit

Warning!: To reduce the risk of electrical shock, do not expose this apparatus to rain or moisture
AVERTISSEMENT! Pour réduire le risque de choc électrique, n'exposez pas cet appareil à la pluie ou à l'humidité.

Save these instructions
Conservez ces instructions

Compliance of this equipment is confirmed by the following label that is placed on the equipment:
Conformité de cet appareil est confirmé par le symbole suivant qui est placé sur l'équipement:

USA & Canada Compliance

FCC Part 15, Subpart B Unintentional Emissions Interference Statement

This equipment has been tested and found to comply with the limits for a Class B digital device, pursuant to Part 15 of the FCC rules. These limits are designed to provide reasonable protection against harmful interference when the equipment is operated in a residential installation. This equipment generates uses and can radiate radio frequency energy and, if not installed and used in accordance with the instructions, may cause harmful interference to radio communications. However, there is no guarantee that interference will not occur in a particular installation. If this equipment does cause harmful interference to radio or television reception, which can be determined by turning the equipment off and on, the user is encouraged to try to correct the interference by one or more of the following measures:

- Reorient or relocate the receiving antenna.
- Increase the separation between the equipment and receiver.
- Connect the equipment into an outlet on a circuit different from that to which the receiver is connected.
- Consult the dealer or an experienced radio/TV technician for help.

FCC Partie 15, sous-section B Unintentional Déclaration sur les interférences des émissions

Cet équipement a été testé et jugé conforme aux limites établies pour un dispositif numérique de classe B, conformément à la Partie 15 des règlements de la FCC. Ces limites sont conçues pour fournir une protection raisonnable contre les interférences nuisibles lorsque l'équipement est utilisé dans une installation résidentielle. Cet équipement génère, utilise et peut émettre de l'énergie rayonnent fréquence et, s'il n'est pas installé et utilisé conformément aux instructions, il peut causer des interférences nuisibles aux communications radio. Cependant, il n'existe aucune garantie que des interférences ne se produiront pas dans une installation particulière. Si cet équipement provoque des interférences nuisibles à la réception radio ou télévision, ce qui peut

être déterminé en mettant l'équipement hors et sous tension, l'utilisateur est encouragé à essayer de corriger l'interférence par une ou plusieurs des mesures suivantes:

- Réorienter ou déplacer l'antenne de réception.
- Augmenter la distance entre l'équipement et le récepteur.
- Connecter l'équipement à une prise sur un circuit différent de celui sur lequel le récepteur est branché.
- Consulter le revendeur ou un technicien radio / télévision qualifié pour obtenir de l'aide.

This device complies with part 15 of the FCC rules and Industry Canada's licence-exempt RSSs. Operation is subject to the following two conditions: (1) This device may not cause harmful interference, and (2) this device must accept any interference received, including interference that may cause undesired operation.

Le présent appareil est conforme aux CNR d'Industrie Canada applicables aux appareils radio exempts de licence. L'exploitation est autorisée aux deux conditions suivantes : (1) l'appareil ne doit pas produire de brouillage, et (2) l'utilisateur de l'appareil doit accepter tout brouillage radioélectrique subi, même si le brouillage est susceptible d'en compromettre le fonctionnement.

IMPORTANT! Any changes or modifications not expressly approved by the party responsible for compliance could void the user's authority to operate this equipment.

IMPORTANT! Tous les changements ou modifications pas expressément approuvés par la partie responsable de la conformité ont pu vider l'autorité de l'utilisateur pour actionner cet équipement.

FCC Part 15, Subpart C / RSS-247 Intentional Emissions Interference Statement

Compliance of this equipment is confirmed by the following certification numbers that are placed on the equipment:

Notice: The term "FCC ID:" and "IC:" before the certification number signifies that FCC and Industry Canada technical specifications were met.

FCC ID: R33C4TT10
IC: 7848A-C4TT10

This equipment must be installed by qualified professionals or contractors in accordance with FCC Part 15.203 & IC RSS-247, Antenna Requirements. Do not use any antenna other than the one provided with the unit.

FCC Partie 15, sous-partie C / RSS-247 Déclaration volontaire des émissions interférences

Conformité de cet appareil est confirmé par les chiffres de certification suivants qui sont placés sur l'équipement:

Avis: Le terme «FCC ID:" et "IC:" devant le numéro de certification signifie que les spécifications techniques de la FCC et d'Industrie Canada ont été respectées.

FCC ID: R33C4TT10
IC: 7848A-C4TT10

Cet équipement doit être installé par des professionnels qualifiés ou entrepreneurs conformément aux normes FCC partie 15.203 & IC RSS-247, Exigences d'antenne. Ne pas utiliser une antenne autre que celui fourni avec l'appareil.

RF Radiation Exposure Statement

This equipment complies with the FCC/IC radiation exposure limits set fourth for portable transmitting devices operation in an uncontrolled environment. End users must follow the specific operating instructions to satisfy RF exposure compliance.

- The equipment should only be used or installed at locations where there is normally greater than a 20cm separation between the antenna and all persons.
- This transmitter must not be co-located or operation in conjunction with any other antenna or transmitter.
- Any changes or modifications not expressly approved by the party responsible for compliance could void the user's authority to operate this equipment.

Déclaration d'exposition aux radiations RF
Cet équipement est conforme aux limites FCC / IC d'exposition aux rayonnements définies quatrième opération appareils portables transmettre dans un environnement non contrôlé. Les utilisateurs finaux doivent suivre les instructions de fonctionnement spécifiques pour satisfaire la conformité aux expositions RF.

- L'équipement ne doit être utilisé ou installé à des endroits où il est normalement supérieure à une séparation de 20 cm entre l'antenne et toute personne.
- Cet émetteur ne doit pas être co-localisés ou fonctionnement en conjonction avec une autre antenne ou un autre émetteur.
- Tout changement ou modification non expressément approuvé par la partie responsable de la conformité pourraient annuler l'autorité de l'utilisateur à utiliser cet équipement.

European Compliance (English)

Conformity of the equipment with the guidelines below is attested by the application of the CE mark.

CE Declaration of Conformity

Manufacturer's Name:	CONTROL4 CORPORATION
Manufacturer's Address:	11734 S. ELECTION ROAD SUITE 200 SALT LAKE CITY UT 84020 USA
EU Representative Name:	CONTROL4 EMEA LIMITED
EU Representative Address:	UNIT3, GREEN PARK BUSINESS CENTRE SULTON-ON-THE FOREST YORK YO61 IET, UNITED KINGDOM
Product Name(s):	Table Top Touch Screen
Brand:	Contol4
Model(s):	C4-TT10-WH & C4-TT10-BL

Product Standard(s) to which Conformity of the Council Directive(s) is declared:

EMC - 2014/30/EU "Electromagnetic Compatibility (EMC) Directive":
(Emissions) EN 55022:2010, **(Immunity)** EN 55024:2010, EN 301 489-1 V1.9.2 (2011-09), EN 301 489-17 V2.2.1 (2012-09), EN 61000-3-2:2006 + A1:2009 + A2:2009 & EN 61000-3-3:2008

Safety – 2006/95/EC "Low Voltage Directive (LVD)":
EN 60950-1:2006/A11:2009/A1:2010/A12:2011

Radio - 2014/53/EU Radio Equipment Directive (RED):
EN 300 328 V1.9.1

ErP - 2009/125/EC Energy-related Product Directive.

RoHS - 2011/65/EU Restriction of the Use of certain Hazardous Substances in Electrical and Electronic Equipment (EEE) & WEEE - 2002/96/EC Waste of Electrical and Electronic Equipment (EEE).

We, the undersigned, hereby declare that the equipment specified above conforms to the above directives and standards. Date of Issue: December 22, 2015

Legal Representative

Signature

Roger Midgley
Sr. Regulatory Compliance Engineer

Conformité européenne (French)

Conformité de l'équipement avec les directives ci-dessous est attestée par l'apposition de la marque CE.

Déclaration de conformité CE

Le nom du fabricant:	CONTROL4 CORPORATION
Le fabricant Adresse:	11734 S. ÉLECTION Road Suite 200 SALT LAKE CITY UT 84020 USA
Nom Représentant de l'UE:	CONTROL4 EMEA LIMITED
UE représentant Adresse:	Unit3, GREEN PARK CENTRE D'AFFAIRES Sulton-ON-THE FOREST YORK YO61 IET, ROYAUME-UNI
Nom (s) de produit:	Tableau Écran tactile Haut
Marque:	Contol4
Modèle (s):	C4-TT10-WH & C4-TT10-BL

Produit standard (s) dont la conformité de la directive du Conseil (s) est déclarée:

EMC - 2014/30 / "compatibilité électromagnétique (CEM)" UE:
(Émissions) EN 55022: 2010, **(immunité)** EN 55024: 2010, EN 301 489-1 v1.9.2 (2011-09), EN 301 489-17 V2.2.1 (2012-09), EN 61000-3-2: 2006 + A1: 2009 + A2: 2009 et EN 61000-3-3: 2008

Sécurité - 2006/95 / CE "Directive Basse Tension (DBT)":
EN 60950-1: 2006 / A11: 2009 / A1: 2010 / A12: 2011

Radio - 2014/53 / UE directive équipement radio (RED):
EN 300 328 V1.9.1

ErP - 2009/125 / CE liées à l'énergie directive sur les produits.

RoHS - 2011/65 / UE limitation de l'utilisation de certaines substances dangereuses dans les équipements électriques et électroniques (EEE) et DEEE - 2002/96 / CE Déchets d'équipements électriques et électroniques (EEE).

Nous, soussignés, déclarons que l'équipement indiqué ci-dessus est conforme aux directives et normes ci-dessus. Date de publication 22 Décembre, ici à 2015

Représentant légal

Signature

Roger Midgley
Ingénieur de conformité réglementaire Sr.

European Compliance (German)

Die Konformität mit den folgenden Richtlinien wird durch die Anwendung des CE-Kennzeichen bestätigt.

CE-Konformitätserklärung

Name des Herstellers:	Control4 CORPORATION
Adresse des Herstellers:	11734 S. WAHL ROAD SUITE 200 SALT LAKE CITY UT 84020 USA
EU-Vertreter Name:	Control4 EMEA LIMITED
EU-Vertreter Adresse:	Unit3, GREEN Park Geschäftszentrum Sulton-ON-THE FOREST YORK YO61 IET, VEREINIGTES KÖNIGREICH
Produkt-Name (n):	Table Top-Screen
Marke:	Contol4
Modell (e):	C4-TT10-WH & C4-TT10-BL

Produkt-Norm (en), um die Konformität der Richtlinie (n) deklariert ist:

EMC - 2014/30 / EG "Elektromagnetische Verträglichkeit (EMV) Die Richtlinie": (Emissionen) EN 55022: 2010, **(Immunität)** EN 55024: 2010, EN 301 489-1 V1.9.2 (2011-09), EN 301 489-17 V2.2.1 (2012-09), EN 61000-3-2 : 2006 + A1: 2009 + A2: 2009 und EN 61000-3-3: 2008

Sicherheit - 2006/95 / EG "Niederspannungsrichtlinie (LVD)":
EN 60950-1: 2006 / A11: 2009 / A1: 2010 / A12: 2011

Radio - 2014/53 / EU über Funkanlagen-Richtlinie (RED):
EN 300 328 V1.9.1

ErP - 2009/125 / EG Energiebezogene Produktrichtlinie.

RoHS - 2011/65 / EU zur Beschränkung der Verwendung bestimmter gefährlicher Stoffe in Elektro- und Elektronikgeräten (EEE) & WEEE - 2002/96 / EG Richtlinie über Elektro- und Elektronikgeräten (EEE).

Wir, die Unterzeichneten, erklären hiermit, dass das oben angegebene Gerät zu den oben genannten Richtlinien und Normen. Ausstellungsdatum: 22. Dezember 2015

Gesetzlicher Vertreter

Stempel, Unterschrift

Roger Midgley
Sr. Regulatory Compliance-Ingenieur

Conformità Europea (Italian)

Conformità del materiale con le linee guida qui sotto è attestata dall'applicazione del marchio CE.

Dichiarazione di conformità CE

Nome del produttore:	Control4 CORPORATION
Indirizzo del produttore:	11734 S. ELEZIONI STRADA SUITE 200 SALT LAKE CITY UT 84020 Stati Uniti d'America
UE Nome Rappresentante:	Control4 EMEA LIMITED
UE Indirizzo Rappresentante:	Unit3, GREEN PARK BUSINESS CENTRE Sulton-ON-THE FOREST YORK YO61 IET, REGNO UNITO
Nome del prodotto (s):	Table Top Touch Screen
Marca:	Contol4
Modello (s):	C4-TT10-WH & C4-TT10-BL

Prodotto standard (s) a cui conformità della direttiva del Consiglio (s) è dichiarato:

EMC - 2014/30 / UE "Compatibilità elettromagnetica (EMC)":
(Emissioni) EN 55022: 2010, **(immunità)** EN 55024: 2010, EN 301 489-1 v1.9.2 (2011-09), EN 301 489-17 V2.2.1 (2012-09), EN 61000-3-2 : 2006 + A1: 2009 + A2: 2009 e EN 61000-3-3: 2008

Sicurezza - 2006/95 / CE "Direttiva bassa tensione (LVD)":
EN 60950-1: 2006 / A11: 2009 / A1: 2010 / A12: 2011

Radio - 2014/53 / Direttiva sulle apparecchiature radio dell'UE (RED):
EN 300 328 V1.9.1

ErP - 2009/125 / CE Energy legati direttiva sui prodotti.

RoHS - 2011/65 Limitazione / UE dell'uso di determinate sostanze pericolose nelle apparecchiature elettriche ed elettroniche (AEE) e RAEE - 2002/96 / CE sui rifiuti di apparecchiature elettriche ed elettroniche (AEE).

I sottoscritti, dichiariamo che l'apparecchiatura specificata in precedenza è conforme alle direttive e norme di cui sopra. Data di pubblicazione: 22 dicembre 2015

Rappresentante legale

Firma

Roger Midgley
Suor Conformità alle normative Ingegnere

Conformidad Europea (Spanish)

La conformidad de los equipos con las siguientes pautas es atestiguado por la aplicación de la marca CE.

Declaración de conformidad CE

Nombre del fabricante:	Control4 CORPORACIÓN
Dirección del fabricante:	11734 S. ELECCIÓN Road Suite 200 SALT LAKE CITY UT 84020 EE.UU.
UE Nombre Representante:	Control4 EMEA LIMITED
Dirección Representante de la UE:	Tema 3., VERDE PARQUE EMPRESARIAL CENTRO Sulton-EN-EL BOSQUE YORK YO61 IET, REINO UNIDO
Nombre (s) del producto:	Mesa de la pantalla táctil
Marca:	Contol4
Modelo (s):	C4-TT10-WH & C4-TT10-BL

Producto estándar (s) a la que la conformidad de la Directiva del Consejo (s) se declara:

EMC - 2014/30 / UE "Directiva de compatibilidad electromagnética (EMC)":
(Emisiones) EN 55022: 2010, **(inmunidad)** EN 55024: 2010, EN 301 489-1 v1.9.2 (2011-09), EN 301 489-17 V2.2.1 (2012-09), EN 61000-3-2 : 2006 + A1: 2009 + A2: 2009 y EN 61000-3-3: 2008

Seguridad - 2006/95 / CE "Directiva de Baja Tensión (LVD)":
EN 60950-1: 2006 / A11: 2009 / A1: 2010 / A12: 2011

Radio - 2014/53 / Directiva de Equipos de Radio de la UE (RED):
EN 300 328 V1.9.1

ErP - 2009/125 relacionados con energía / CE Directiva del producto.

RoHS - 2011/65 restricción del uso de ciertas sustancias peligrosas en equipos electrónicos (AEE) y WEEE eléctricos y / UE - 2002/96 / CE de Residuos de Aparatos Eléctricos (AEE) y electrónicos.

Nosotros, los abajo firmantes, declaramos por la presente que el equipo anteriormente mencionado se ajusta a las directrices y estándares anteriores. Fecha de emisión: 22 de diciembre 2015

Representante legal

Firma

Roger Midgley
Ingeniero Sr. Cumplimiento de la normativa

Conformidade Europeia (Portuguese)

Conformidade do equipamento com as diretrizes abaixo é atestada pela aplicação da marca CE.

Declaração de Conformidade CE

Nome do fabricante:	Control4 CORPORATION
Do fabricante Endereço:	11734 S. ELEIÇÃO ROAD SUITE 200 SALT LAKE CITY UT 84020 EUA
Representante da UE Nome:	Control4 EMEA LIMITED
Representante da UE Endereço:	UNIT3, GREEN PARK CENTRO DE NEGÓCIO Sulton-ON-THE FOREST YO61 IET YORK, REINO UNIDO
Nome (s) produto:	Table Top Screen Toque
Marca:	Contol4
Modelo (s):	C4-TT10-WH & C4-TT10-BL

Padrão do produto (s) a que Conformidade da Directiva do Conselho (s) é declarado:

EMC - 2014/30 / UE "Compatibilidade Electromagnética (EMC)":
(Emissões) EN 55022: 2010, **(Imunidade)** EN 55024: 2010, EN 301 489-1 v1.9.2 (2011-09), EN 301 489-17 V2.2.1 (2012-09), EN 61000-3-2 : 2006 + A1: 2009 + A2: 2009 e EN 61000-3-3: 2008

Segurança - 2006/95 / CE "Directiva de Baixa Tensão (LVD)":
EN 60950-1: 2006 / A11: 2009 / A1: 2010 / A12: 2011

Rádio - 2014/53 / UE Directiva equipamento de rádio (RED):
EN 300 328 v1.9.1

ERP - 2009/125 relacionados Energy-/ CE Directiva do produto.

RoHS - 2011/65 / UE Restrição do Uso de Certas Substâncias Perigosas em Equipamentos Eléctricos e Electrónicos (EEE) e WEEE - 2002/96 / EC de Resíduos de Equipamentos Eléctricos e Electrónicos (EEE).

Nós, abaixo-assinado, declaro que o equipamento especificado acima está em conformidade com as diretrizes e normas acima referidas. Data de Emissão: 22 de dezembro de 2015

Representante legal

Assinatura

Roger Midgley
Sr. Engenheiro Conformidade Regulatória

Recycling

Control4 understands that a commitment to the environment is essential for a health life and sustainable growth for future generations. We are committed to supporting the environmental standards, laws, and directives that have been put in place by various communities and countries that deal with concerns for the environment. This commitment is represented by combining technological innovation with sound environmental business decisions.

WEEE Compliance

Control4 is committed to meeting all requirements of the Waste Electrical and Electronic Equipment (WEEE) directive (2002/96/EC). The WEEE directive requires the manufacturers of electrical and electronic equipment who sell in EU countries: (1) label their equipment to notify customers that it needs to be recycled, and (2) provide a way for their products to be appropriately disposed of or recycled at the end of their product lifespan. For collection or recycling of Control4 products, please contact your local Control4 representative or dealer.

About this Document

Copyright © 2016 Control4 Corporation. All rights reserved. Control4 and the Control4 logo are registered trademarks or trademarks of Control4 Corporation in the United States and/or other countries.

Part Number 200-00416 Rev A, 12/22/2015