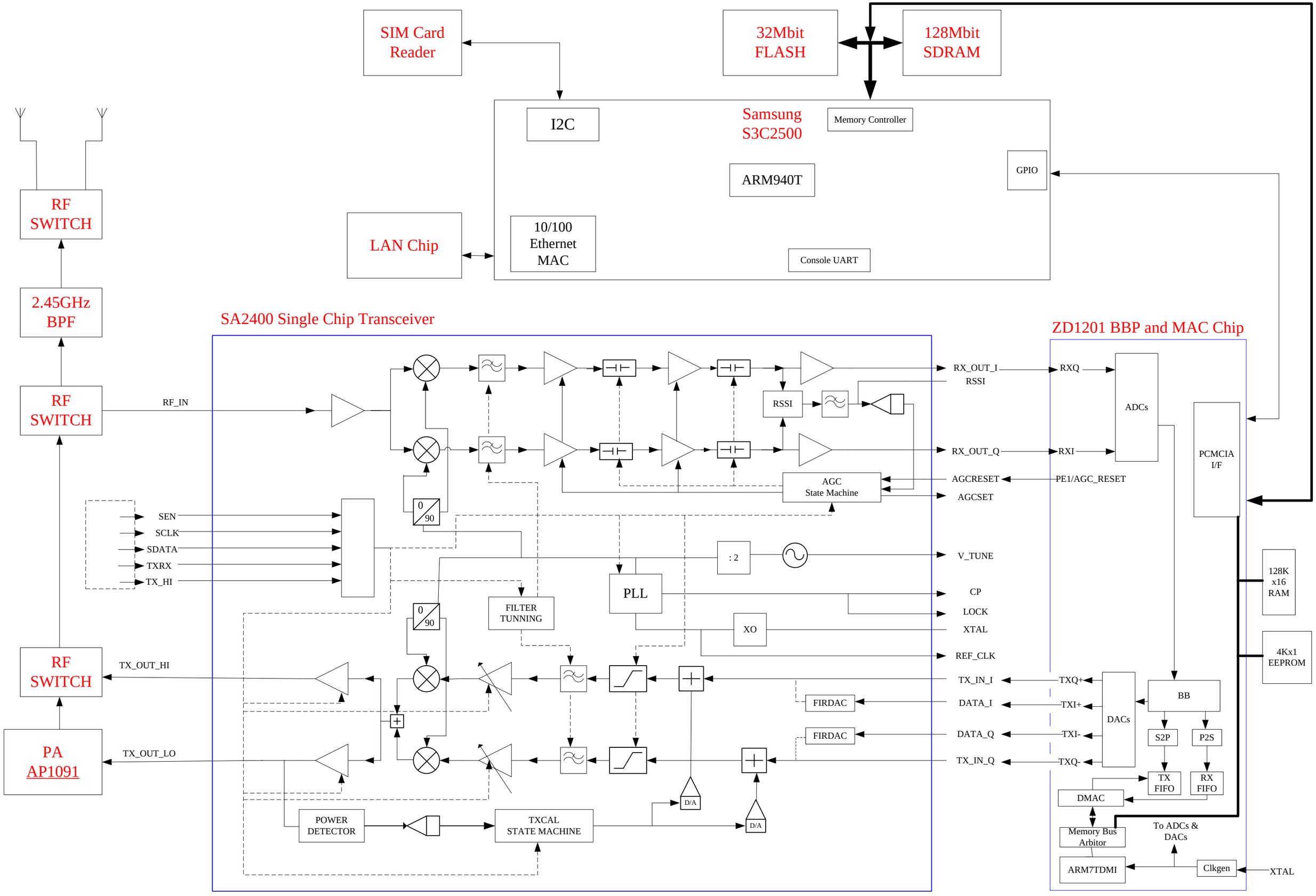
SIM Card Reader
32Mbit FLASH
128Mbit SDRAM
Samsung S3C2500
I2C
Memory Controller
ARM940T
GPIO
LAN Chip
10/100 Ethernet MAC
Console UART
RF SWITCH
2.45GHz BPF
RF SWITCH
RF_IN
SA2400 Single Chip Transceiver
ZD1201 BBP and MAC Chip
RX_OUT_I
RSSI
RX_OUT_Q
AGCRESET
AGCSET
AGC State Machine
RXQ
RXI
ADCs
PCMCIA I/F
PE1/AGC_RESET
SEN
SCLK
SDATA
TXRX
TX_HI
0 90
: 2
V_TUNE
PLL
CP
LOCK
XTAL
REF_CLK
FILTER TUNNING
XO
128K x16 RAM
4Kx1 EEPROM
RF SWITCH
TX_OUT_HI
TX_IN_I
DATA_I
DATA_Q
TX_IN_Q
FIRDAC
FIRDAC
TXQ+
TXI+
TXI-
TXQ-
DACs
BB
S2P
P2S
TX FIFO
RX FIFO
DMAC
Memory Bus Arbitor
To ADCs & DACs
ARM7TDMI
Clkgen
XTAL
PA AP1091
TX_OUT_LO
D/A
D/A
POWER DETECTOR
TXCAL STATE MACHINE

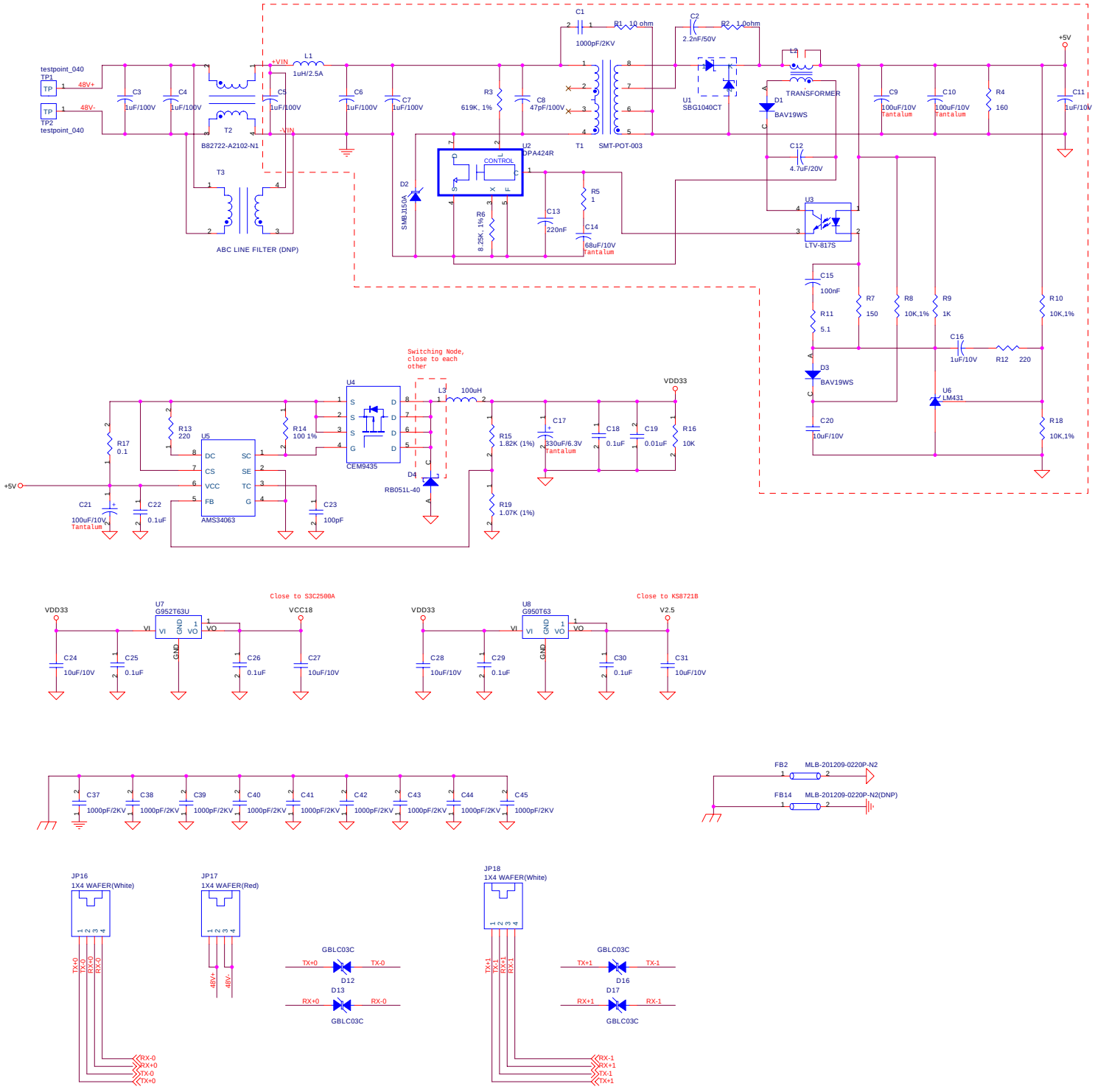

惠勤科技股份有限公司

Title	P974 Point to Point WLAN AP/AC	
Size C	Document Number Power (POE, +5V, VDD33, VCC18, VDD25, V2.5)	Rev 1.0C
Date: Tuesday, August 10, 2004	Sheet 2 of 11	

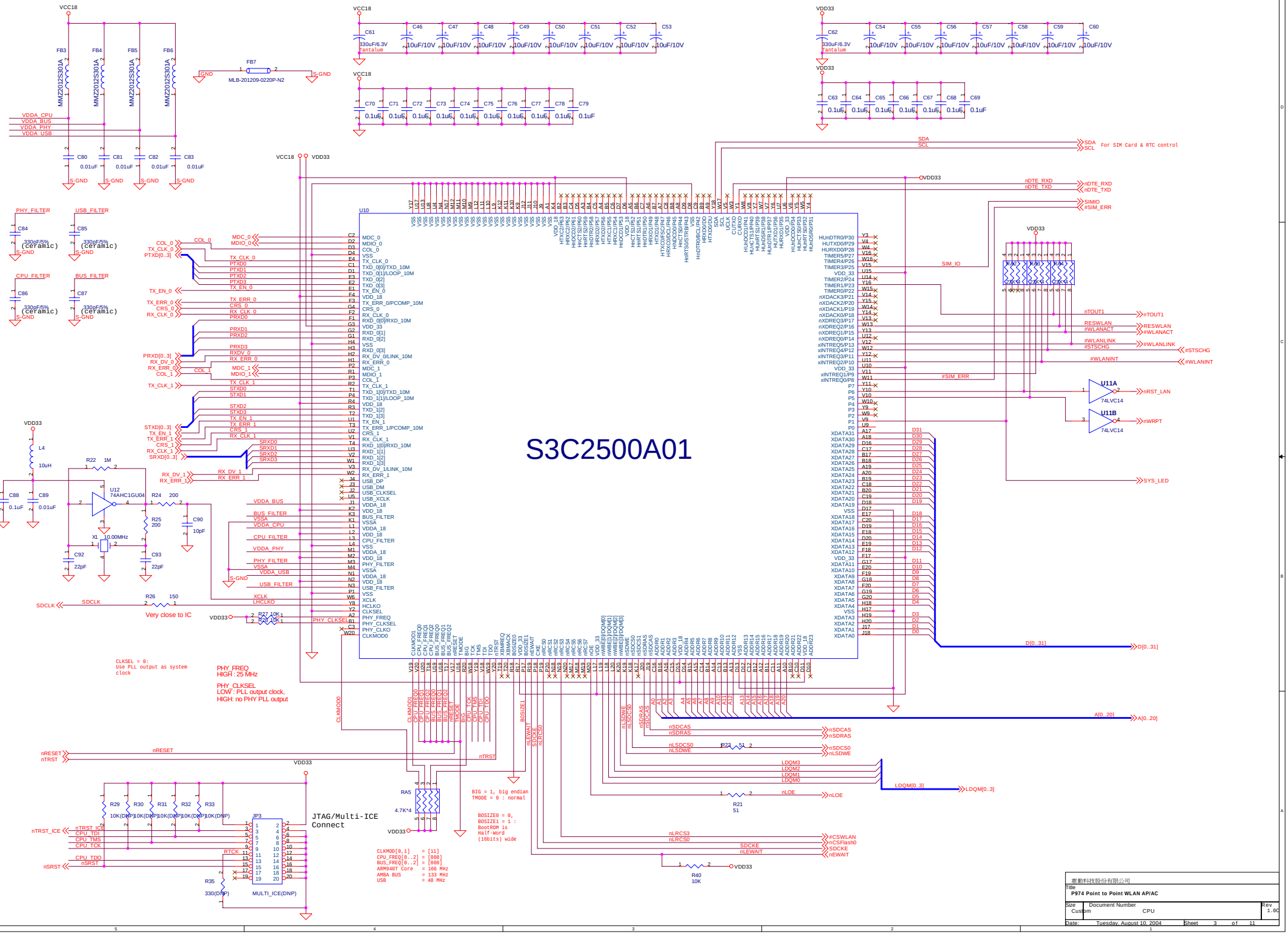
S3C2500A01
U10
U11A
U11B
74LVC14
U12
74AHC1GU04
X1 10.00MHz
JTAG/Multi-ICE Connect
MULTI_ICE(DNP)
JP3
MMZ2012S301A
MLB-201209-0220P-N2
For SIM Card & RTC control
Very close to IC
CLKSEL = 0:
Use PLL output as system clock
PHY_FREQ
HIGH : 25 MHz
PHY_CLKSEL
LOW : PLL output clock,
HIGH: no PHY PLL output
BIG = 1, big endian
TMODE = 0 : normal
BOSIZE0 = 0,
BOSIZE1 = 1 :
BootROM is
Half-Word
(16bits) wide
CLKMOD[0,1] = [11]
CPU_FREQ[0..2] = [000]
BUS_FREQ[0..2] = [000]
ARM940T Core = 166 MHz
AMBA BUS = 133 MHz
USB = 48 MHz
惠勤科技股份有限公司
Title
P974 Point to Point WLAN AP/AC
Size
Custom
Document Number
CPU
Rev
1.00
Date: Tuesday, August 10, 2004
Sheet 3 of 11

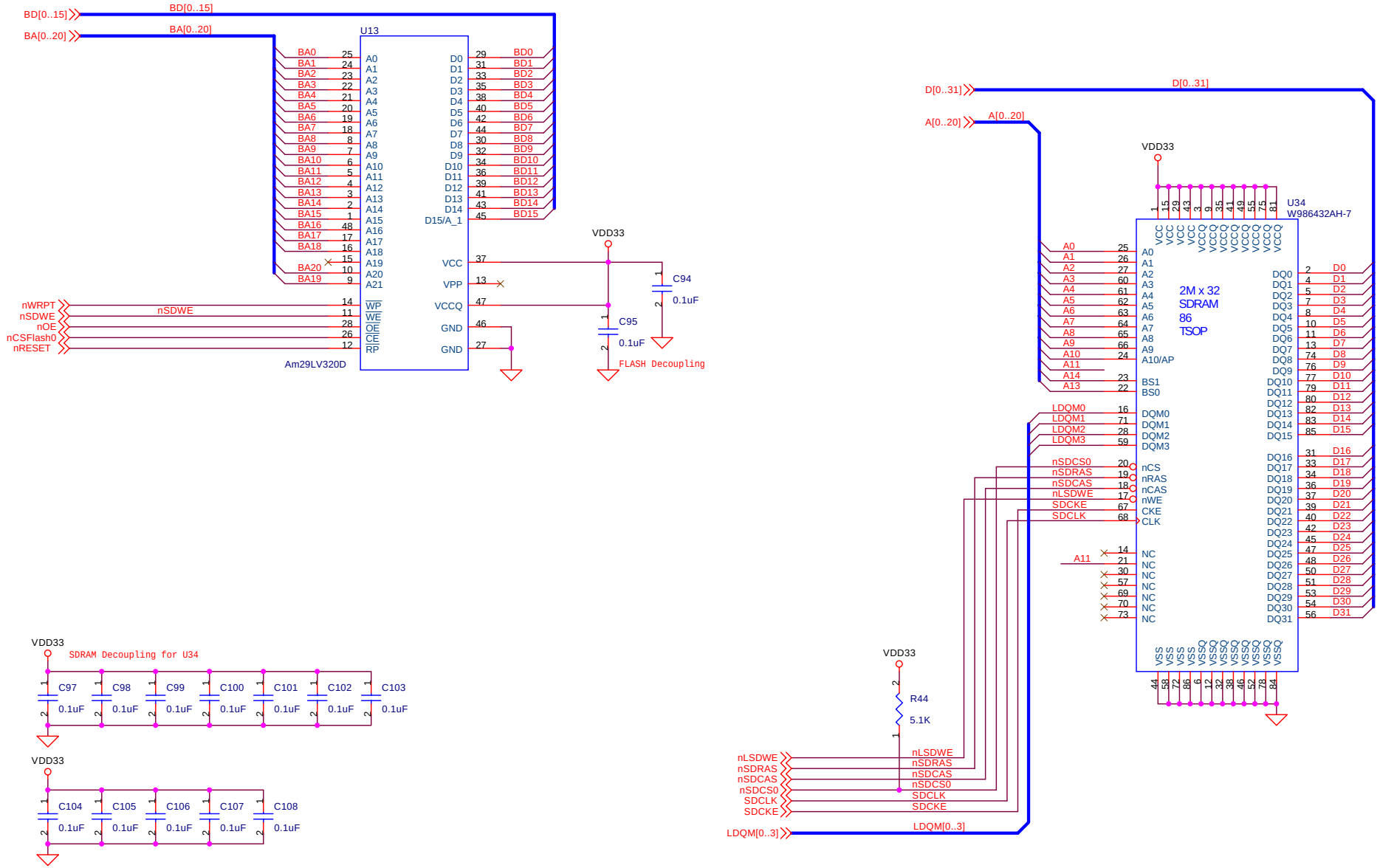

惠勤科技股份有限公司

Title
P974 Point to Point WLAN AP/AC

Size	Document Number	Rev
B	Flash & SDRAM	1.0C

Date: Tuesday, August 10, 2004 Sheet 4 of 11

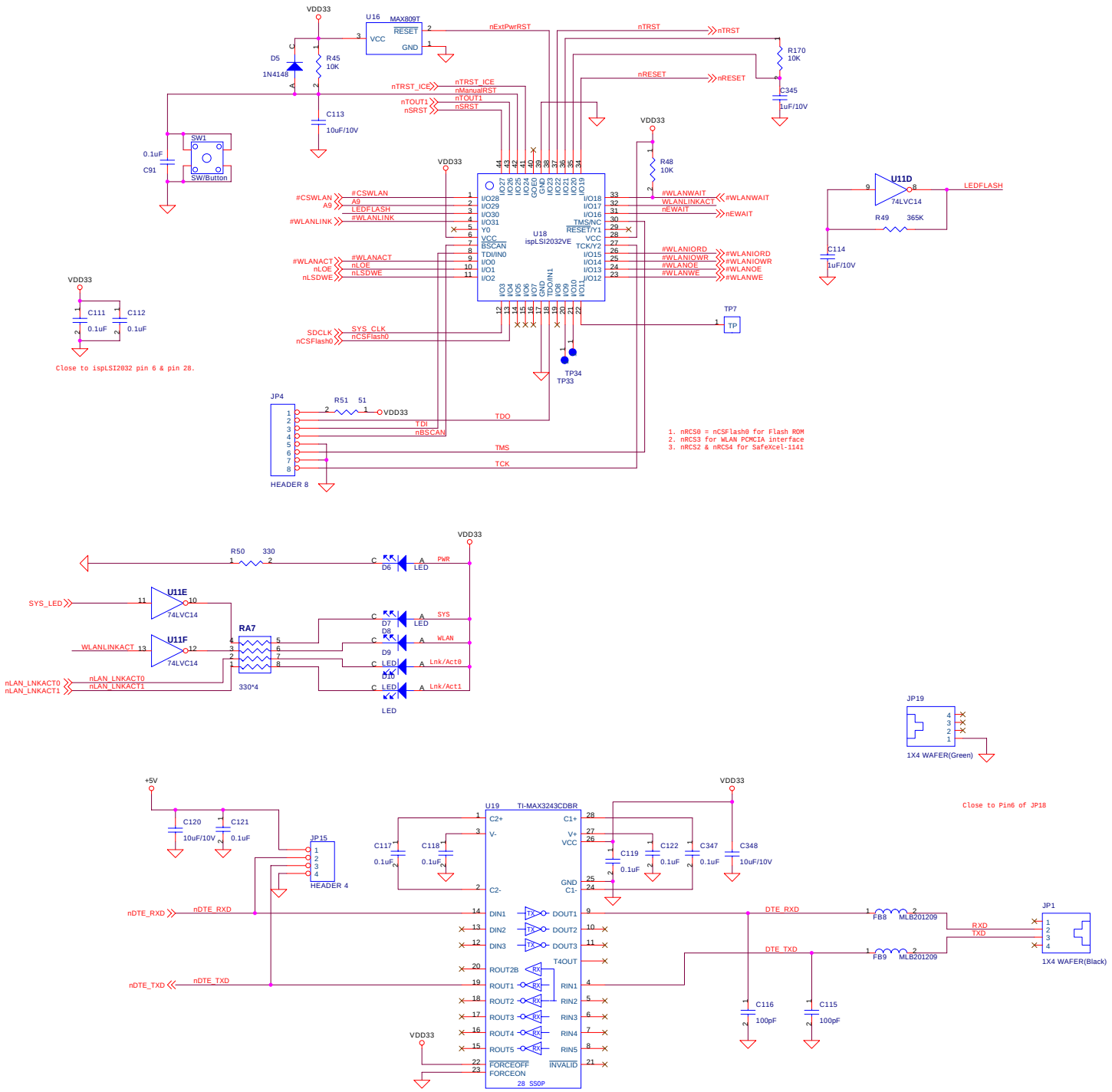

惠勤科技股份有限公司		
Title	P974 Point to Point WLAN AP/AC	
Size C	Document Number CPLD, LED and RS-232 Interface	Rev 1.0C
Date: Tuesday, August 10, 2004	Sheet 5 of 11	

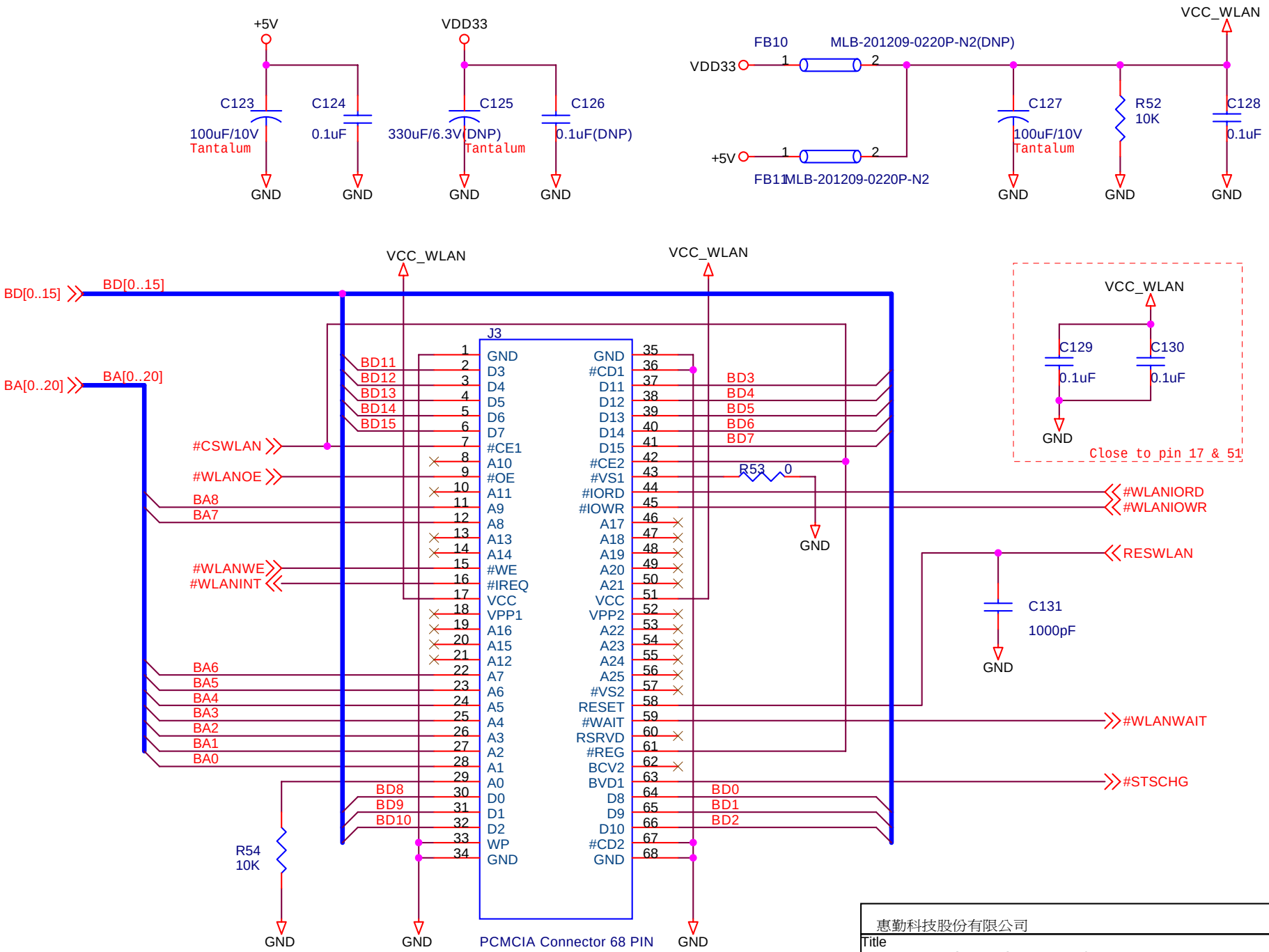

惠勤科技股份有限公司	
Title	P974 Point to Point WLAN AP/AC
Size A	Document Number: Bus Buffer & Wireless LAN PCMCIA Interface — Rev 1.0C
Date: Tuesday, August 10, 2004	Sheet 6 of 11

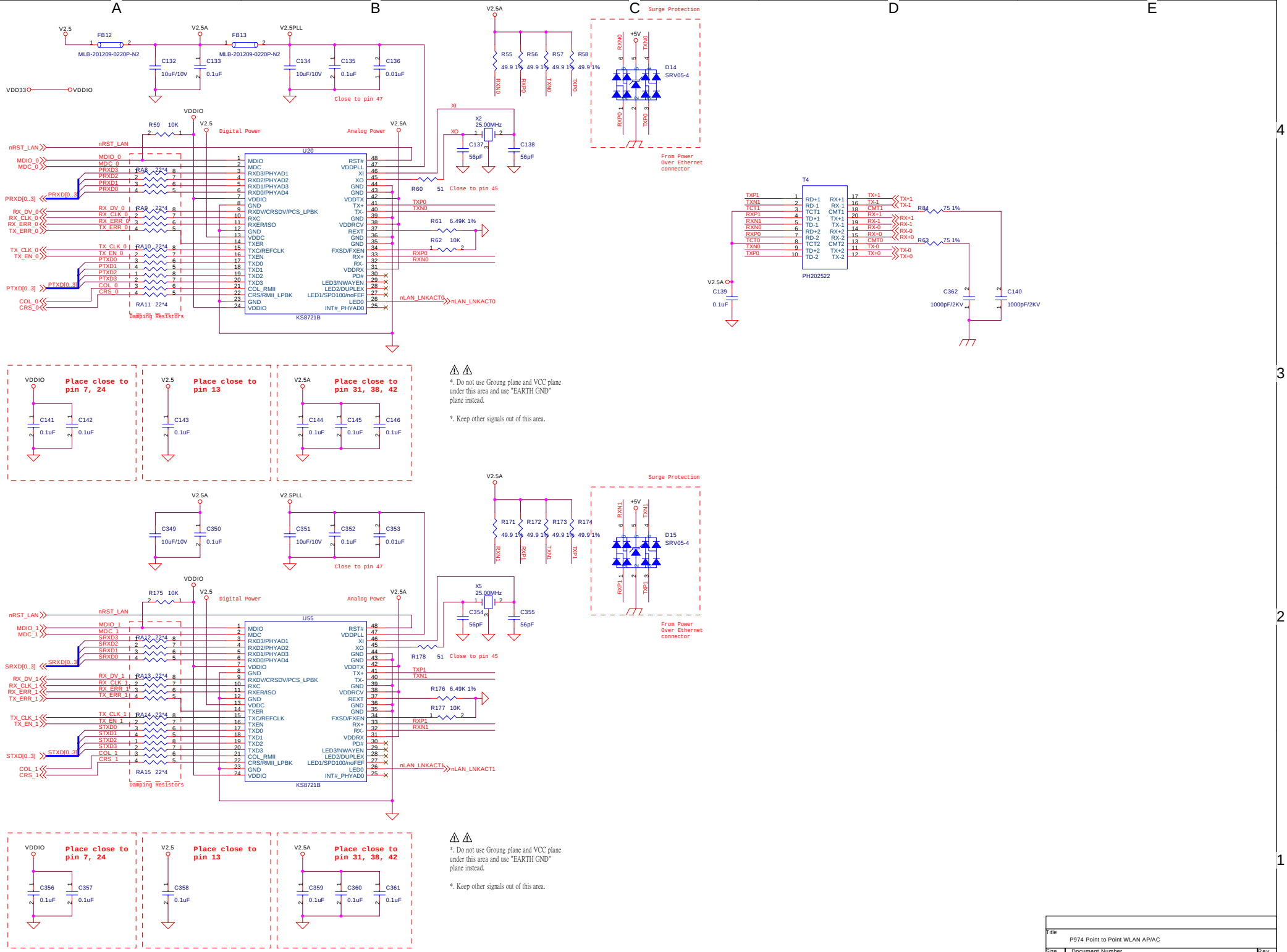

Title	P974 Point to Point WLAN AP/AC
Size C	Document Number Auto MID/MDIX 10/100Mbps PHY
Rev	
Date: Tuesday, August 10, 2004	Sheet 7 of 11

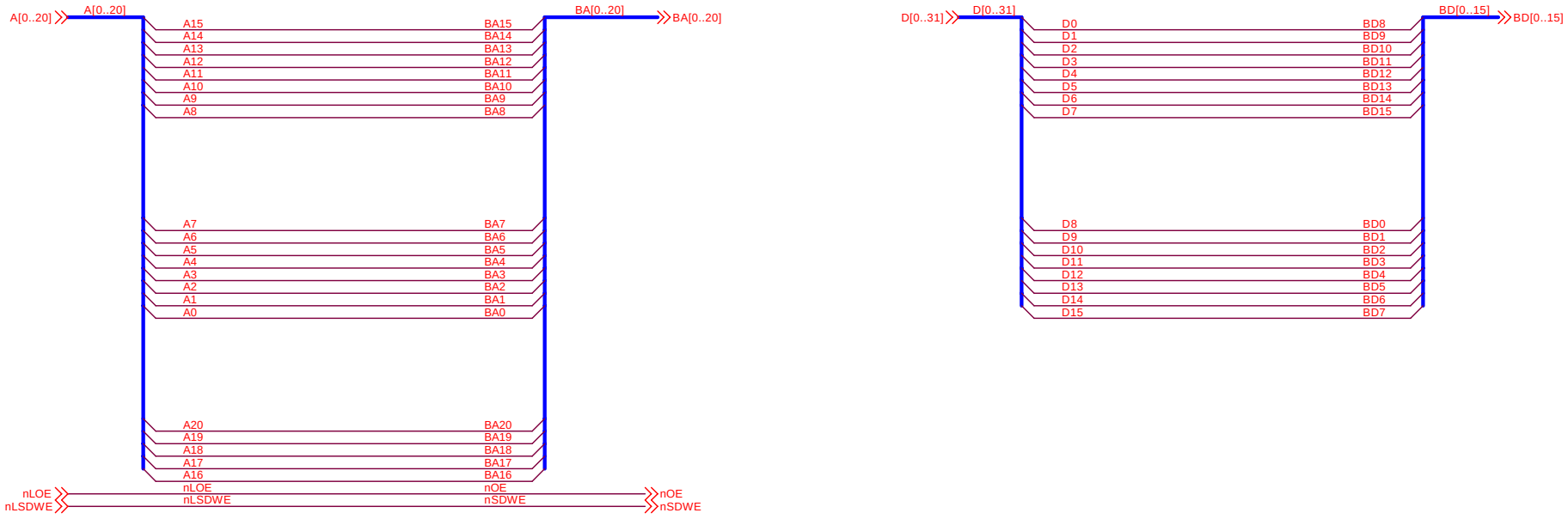

惠勤科技股份有限公司

Title
P974 Point to Point WLAN AP/AC

Size	Document Number	Rev
B	Bus Buffer & Wireless LAN PCMCIA Interface	1.0C

Date: Tuesday, August 10, 2004 Sheet 8 of 11

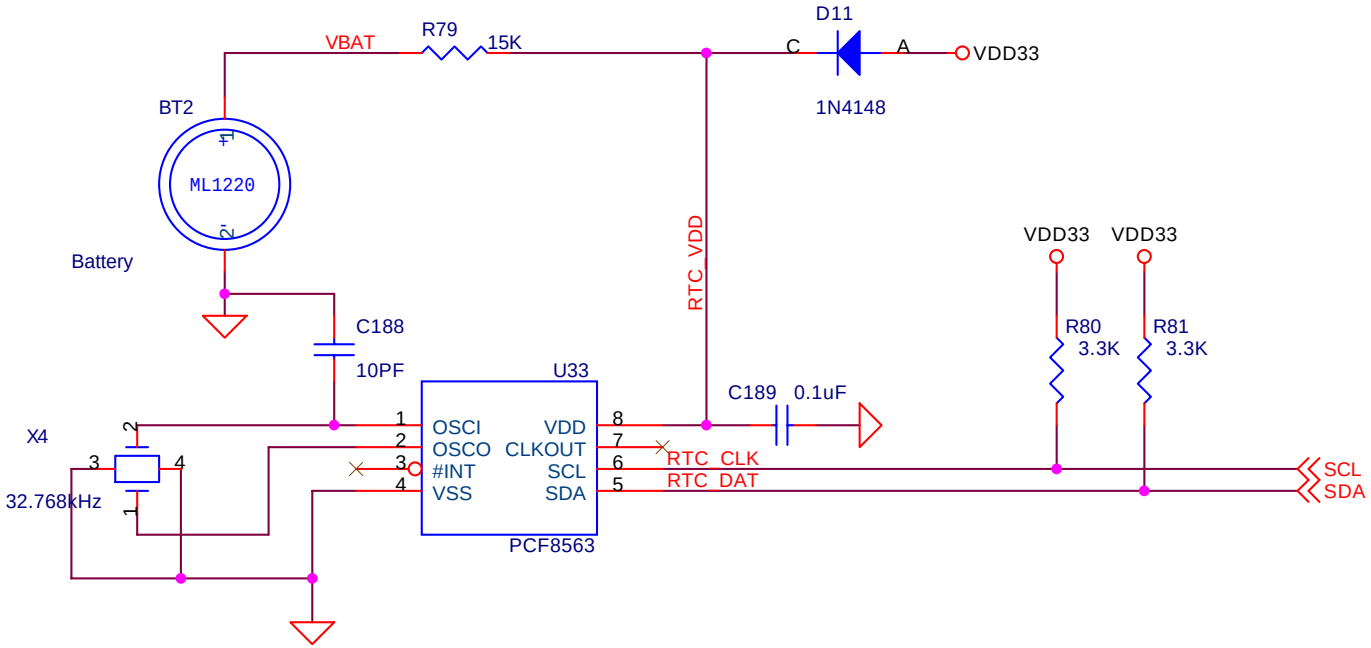

RTC

惠勤科技股份有限公司

Title
P974 Point to Point WLAN AP/AC

Size	Document Number	Rev
A	Real Time Clock	1.0C

Date: Tuesday, August 10, 2004 Sheet 9 of 11

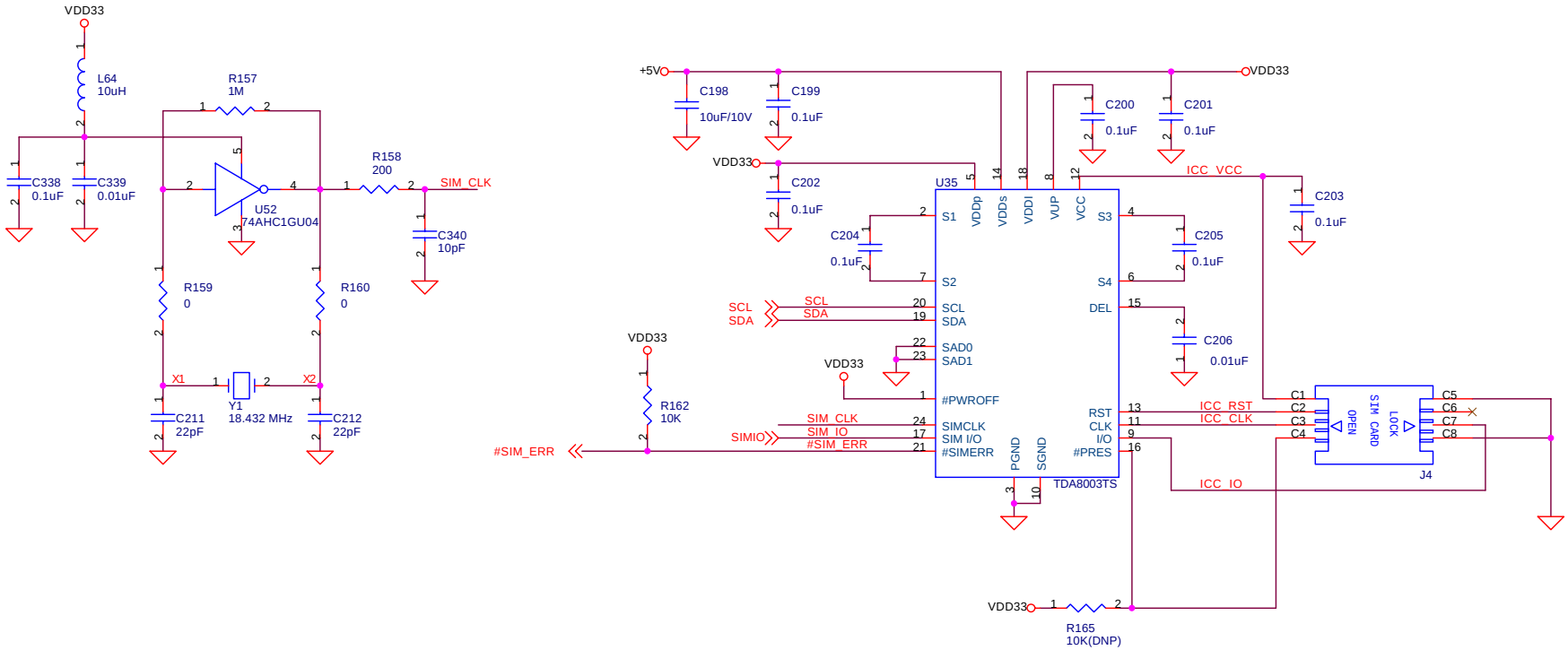

惠勤科技股份有限公司		
Title <Title>		
Size B	Document Number <Doc>	Rev <RevCode>
Date: Tuesday, August 10, 2004	Sheet 10 of 11	

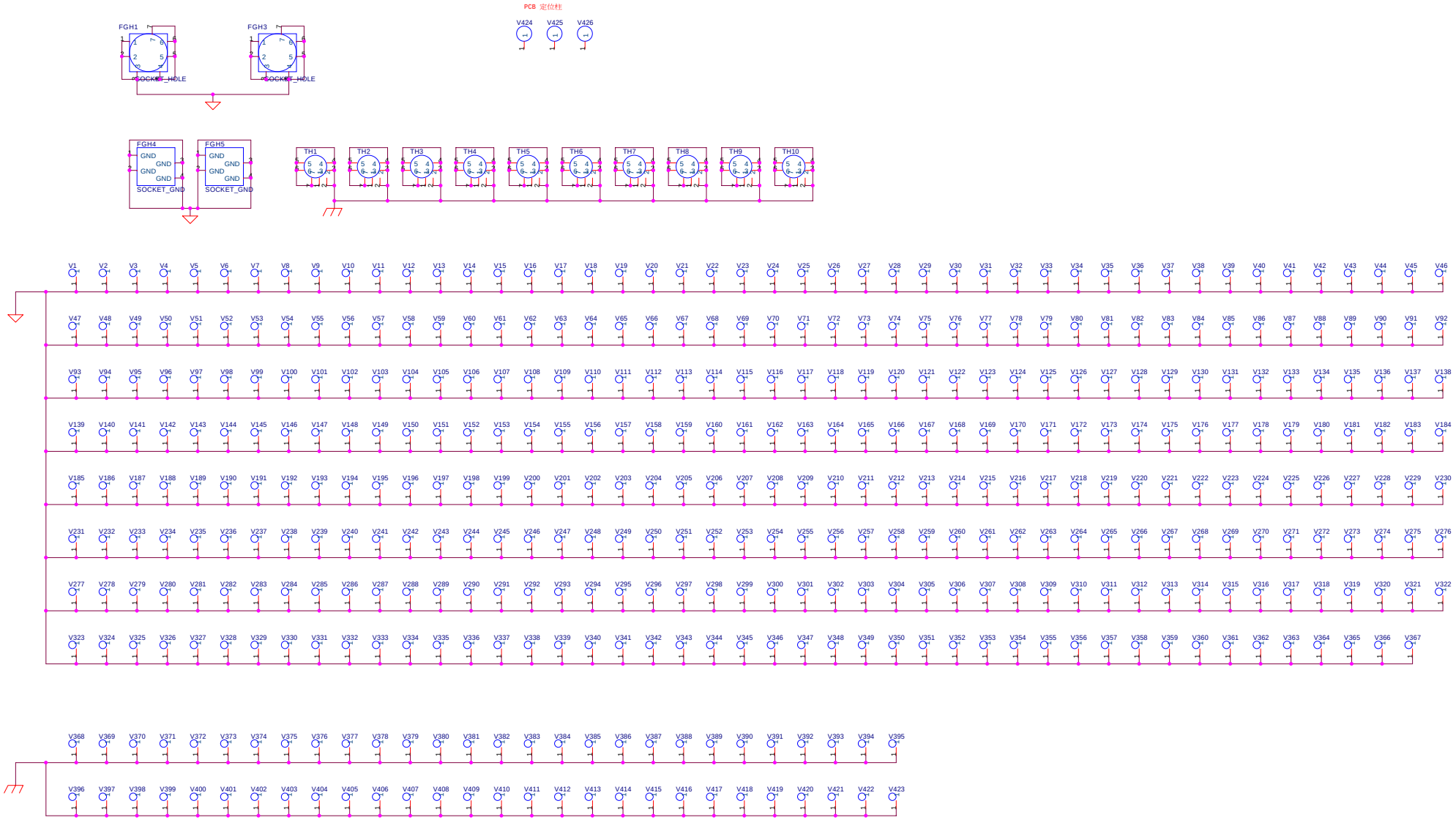

惠勤科技股份有限公司	
Title	P974 Point to Point WLAN AP/AC
Size C	Document Number Vias & Tooling holes
Rev	1.0C
Date: Tuesday, August 10, 2004	Sheet 11 of 11