episode

OWNER'S MANUAL

Home theater with wireless subwoofer

ES-SNDBR-2.1-BLK

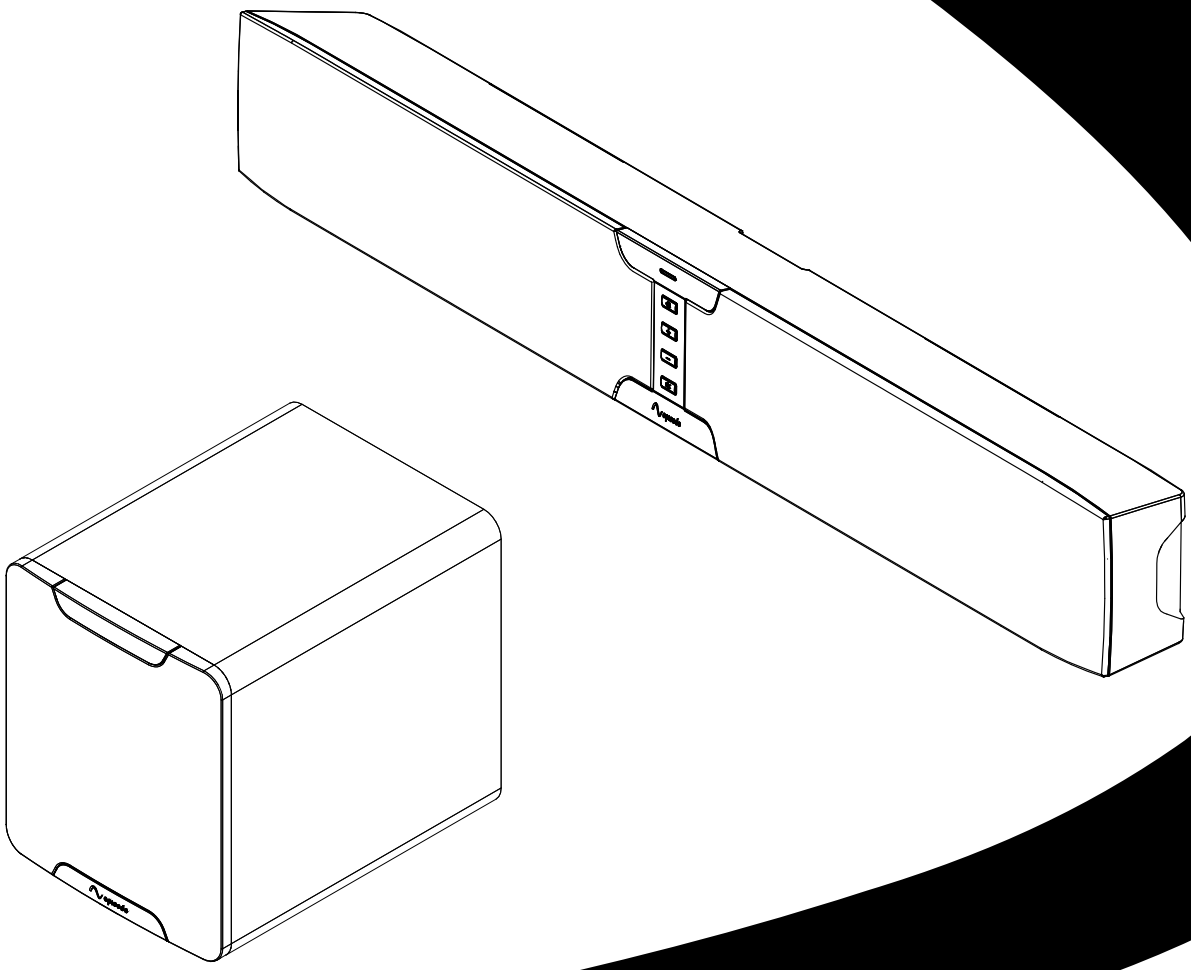

REAL. LIFE. SOUND.

	The lightning flash with arrowhead symbol within an equilateral triangle is intended to alert the user to the presence of uninsulated “dangerous voltage” within the product’s enclosure that may be of sufficient magnitude to constitute a risk of electrical shock to persons.
	The exclamation point, within an equilateral triangle, is intended to alert the user to the presence of important operating and maintenance (servicing) instructions in the literature accompanying the product.

CAUTION

Risk of Electrical Shock!
DO NOT OPEN!

ATTENTION ! RISQUE DE CHOC ! ÉLECTRIQUE PAS OUVRIR !

1. READ these instructions.
2. KEEP these instructions.
3. HEED all warnings.
4. FOLLOW all instructions.
5. DO NOT use this apparatus near water.
6. CLEAN ONLY with dry cloth.
7. DO NOT block any ventilation openings. Install in accordance with the manufacturer’s instructions.
8. DO NOT install near any heat sources such as radiators, heat registers, stoves, or other apparatus (including amplifiers) that produce heat.
9. DO NOT defeat the safety purpose of the polarized or grounding type plug. A polarized plug has two blades with one wider than the other. A grounding type plug has two blades and a third grounding prong. The wider blade or the third prong are provided for your safety. If the provided plug does not fit into your outlet, consult an electrician for replacement of the obsolete outlet.
10. PROTECT the power cord from being walked on or pinched, particularly at plugs, convenience receptacles, and the point where they exit from the apparatus.
11. ONLY USE attachments/accessories specified by the manufacturer.
12. USE ONLY with the cart, stand, tripod, bracket, or table specified by the manufacturer, or sold with the apparatus. When a cart is used, use caution when moving the cart/apparatus combination to avoid injury from tip-over.

13. UNPLUG this apparatus during lightning storms or when unused for long periods of time.
14. REFER all servicing to qualified service personnel. Servicing is required when the apparatus has been damaged in any way, such as power-supply cord or plug is damaged, liquid has been spilled or objects have fallen into the apparatus, the apparatus has been exposed to rain or moisture, does not operate normally, or has been dropped.
15. To reduce the risk of fire or electric shock, do not expose this apparatus to rain or moisture. The apparatus shall not be exposed to dripping or splashing and that objects filled with liquids, such as vases, shall not be placed on apparatus.
16. To completely disconnect this apparatus from the AC mains, disconnect the power supply cord plug from the AC receptacle.
17. The mains plug/appliance coupler is used as disconnect device, the disconnect device shall remain readily operable.
18. DO NOT overload wall outlets or extension cords beyond their rated capacity as this can cause electric shock or fire.
19. No naked flame sources, such as lighted candles, should be placed on the apparatus.
20. Correct Disposal of this product. This marking indicates that this product should not be disposed with other household wastes throughout the EU. To prevent possible harm to the environment or human health from uncontrolled waste disposal, recycle it responsibly to promote the sustainable reuse of material resources. To return your used device, please use the return and collection systems or contact the retailer where the product was purchased. They can take this product for environmental safe recycling.
21. This equipment is a Class II or double insulated electrical appliance. It has been designed in such a way that it does not require a safety connection to electrical earth. (for wireless subwoofer unit)

WARNING: To reduce the risk of fire or electrical shock, do not expose this apparatus to rain or moisture.

WARNING: No naked flame sources – such as candles – should be placed on the product.

THIS PRODUCT CONTAINS A LITHIUM COIN CELL BATTERY. IF MISUSED OR ABUSED THIS CAN RESULT IN:
• Smoke or gas hazard • Heat hazard • Fire hazard • Explosion hazard

WARNING: Do not place batteries in mouth or ingest.

Chemical burn hazard. Keep new and used batteries out of reach of children and pets. If swallowed, it can cause severe internal burns in just 2 hours and can lead to death.

If you think batteries might have been swallowed or placed inside any part of the body, seek immediate medical attention.

WARNING: If battery compartment does not close securely, stop using the product and keep it away from children and pets.

WARNING: Do not handle leaking or damaged Lithium batteries.

WARNING: Risk of leakage. Only use the specified type of batteries. Never mix new and used batteries. Observe correct polarity. Remove batteries from products that are not in use for extended periods of time. Store batteries in a dry place.

WARNING: Batteries (battery pack or batteries installed) shall not be exposed to excessive heat such as sunshine, fire or the like.

WARNING: Danger of explosion if battery is incorrectly replaced. Replace only with the same or equivalent type.

WARNING: Do not recharge non-rechargeable batteries.

WARNING: Avoid exposure to extreme heat or cold. Please dispose of any used batteries properly, following any local regulations. Do not incinerate.

WARNING: Do Not Open! Risk of Electrical Shock. Voltages in this equipment are hazardous to life. No user-serviceable parts inside. Refer all servicing to qualified service personnel.

Place the equipment near a main power supply outlet and make sure that you can easily access the power breaker switch.

WARNING: This product is intended to be operated ONLY from the AC Voltages listed on the back panel or included power supply of the product. Operation from other voltages other

than those indicated may cause irreversible damage to the product and void the products warranty. The use of AC Plug Adapters is cautioned because it can allow the product to be

plugged into voltages in which the product was not designed to operate. If

the product is equipped with a detachable power cord, use only the type provided with your product or

by your local distributor and/or retailer. If you are unsure of the correct operational voltage, please contact your local distributor and/or retailer.

EU COMPLIANCE INFORMATION CE

Eligible to bear the CE mark; Conforms to European Union Low Voltage Directive 2006/95/EC; European Union EMC Directive 2004/108/EC; European Union Restriction of Hazardous Substances Recast (RoHS2) Directive 2011/65/EC; European Union WEEE Directive 2002/96/EC; European Union Eco-Design Directive 2009/125/EC; European Union registration, Evaluation, Authorization and Restriction of Chemicals (REACH) Directive

2006/121/EC; European Union Radio and Telecommunications Terminal Equipment (R&TTE) Directive 1999/5/EC.

This product contains batteries that are covered under the 2006/66/EC European Directive, which cannot be disposed of with normal household waste. Please follow local regulations.

You may obtain a free copy of the Declaration of Conformity by contacting your dealer, distributor or worldwide headquarters.

WEEE NOTICE

Note: This mark applies only to countries within the European Union (EU) and Norway.

This appliance is labeled in accordance with European Directive 2002/96/EC concerning waste of electrical and electronic equipment (WEEE). This label indicates that this product should not be disposed of with household waste. It should be deposited at an appropriate facility to enable recovery and recycling.

Federal Communication Commission Interference Statement

This device complies with Part 15 of the FCC Rules. Operation is subject to the following two conditions: (1) This device may not cause harmful interference, and (2) this device must accept any interference received, including interference that may cause undesired operation.

This equipment has been tested and found to comply with the limits for a Class B digital device, pursuant to Part 15 of the FCC Rules. These limits are designed to provide reasonable protection against harmful interference in a residential installation. This equipment generates, uses and can radiate radio frequency energy and, if not installed and used in accordance with the instructions, may cause harmful interference to radio communications. However, there is no guarantee that interference will not occur in a particular installation. If this equipment does cause harmful interference to radio or television reception, which can be determined by turning the equipment off and on, the user is encouraged to try to correct the interference by one of the following measures:

- Reorient or relocate the receiving antenna.
- Increase the separation between the equipment and receiver.
- Connect the equipment into an outlet on a circuit different from that to which the receiver is connected.
- Consult the dealer or an experienced radio/TV technician for help.

Approved under the verification provision of FCC Part 15 as a Class B Digital Device.

Caution: Changes or modifications not expressly approved by the manufacturer could void the user’s authority to operate this device.

Caution: To comply with the limits of the Class B digital device, pursuant to Part 15 of the FCC Rules, this device is to comply with Class B limits. All peripherals must be shielded and

grounded. Operation with non-certified peripherals or non-shielded cables my result in interference to radio or reception.

Radiation Exposure Statement:

This equipment complies with FCC radiation exposure limits set forth for an uncontrolled environment. This equipment should be installed and operated with minimum distance 20cm between the radiator & your body. Note: The country code selection is for non-US model only and is not available to all US model. Per FCC regulation, all WiFi product marketed in US must fixed to US operation channels only.

This Class B digital apparatus complies with Canadian ICES-003. CAN ICES-3 (B)/NMB-3(B)

WIRELESS TRANSMITTER COMPLIANCE INFORMATION

The term “IC:” before the radio certification number only signifies that Industry Canada technical specifications were met.

This device complies with part 15 of the FCC Rules and the applicable Industry Canada license-exempt RSS standard(s). Operation is subject to the following two conditions: (1) this

device may not cause harmful interference, and (2) this device must accept any interference, including interference that may cause undesired operation of the device.

This equipment complies with FCC and IC radiation exposure limits set forth for an uncontrolled environment. This equipment should be installed and operated with minimum distance 20cm between the radiator and your body. This transmitter must not be co-located or operating in conjunction with any other antenna or transmitter.

PRÉCAUTIONS DE SÉCURITÉ IMPORTANTES A LIRE EN PREMIER !

1. Lisez ces instructions.
2. Conservez ces instructions.
3. Tenez compte de tous les avertissements.
4. Suivez toutes les instructions.
5. N’utilisez pas cet appareil près de l’eau.
6. Nettoyez uniquement avec un chiffon sec.
7. Ne bouchez aucune ouverture de ventilation. Installez conformément aux instructions du fabricant
8. Ne l’installez pas à proximité d’une source de chaleur telle que des radiateurs, des bouches de chaleur, des fourneaux ou d’autres appareils (y compris les amplificateurs) qui produisent de la chaleur.
9. Ne détournez pas l’objectif de sécurité de la fiche polarisée ou de mise à la terre. Une fiche polarisée a deux lames dont l’une est plus large que l’autre. Une fiche avec mise à la terre a deux lames et une troisième broche de mise à la terre. La lame large ou la troisième broche sont conçues pour votre sécurité. Si la fiche fournie ne s’insère pas correctement dans votre prise, consultez un électricien pour le remplacement de la prise obsolète.
10. Évitez de marcher sur le cordon secteur ou de le pincer, en particulier au niveau des fiches, des prises de courant et à son point de sortie de i
11. Utilisez seulement des compléments/accessoires spécifiés par le constructeur.
12. Utilisez l’appareil seulement avec le chariot, pied, trépied, support ou table spécifié par le constructeur, ou vendu avec l’appareil. Lors de l’utilisation d’un chariot, faites attention en déplaçant l’ensemble chariot/appareil afin d’éviter des blessures dues à un basculement.
13. Débranchez cet appareil pendant les orages ou s’il est inutilisé pendant de ’algues périodes.
14. Confiez tous les travaux d’entretien à du personnel qualifié. Un entretien est nécessaire si l’appareil a été endommagé d’une façon quelconque, si le cordon ou la fiche d’alimentation sont endommagés, si du liquide a été renversé sur l’appareil ou si des objets sont tombés dedans, si l’appareil a été exposé à la pluie ou à l’humidité, s’il ne fonctionne pas normalement ou s’il est tombé.
15. L’appareil : ne doit pas être exposé à un égouttement ou à des projections et aucun objet rempli de liquide, tel qu’un vase, ne doit être placé sur .
16. Pour débrancher complètement cet appareil du secteur, débranchez la fiche du cordon d’alimentation de la prise secteur.
17. La fiche secteur du cordon d’alimentation doit rester immédiatement accessible.
18. Les piles ne doivent pas être exposées à une chaleur excessive telle que le soleil, un feu ou un équivalent

AL’éclair avec un symbole fléché se trouvant dans un triangle équilatéral est destiné à alerter l’utilisateur de la présence d’un cc voltage dangereux » non isolé au sein du produit qui pourrait être d’une magnitude suffisante pour constituer un risque de décharge électrique sur une personne.

ÀkLe point d’exclamation se trouvant dans un triangle équilatéral destiné à alerter l’utilisateur de la présence de consignes de maintenance (entretien) et d’utilisation importantes dans la documentation accompagnant le produit. AVERTISSEMENT Pour réduire le risque d’incendie ou d’électrocution n’exposez pas cet appareil à la pluie ou à l’humidité

INTRODUCTION

Thank you for purchasing one of our Episode™ speakers. To complete installation, follow these guidelines. Visit our website for design recommendations and speaker calculators.

CONTENTS

- Soundbar
- Subwoofer
- Power cord (2)
- Analog audio cable
- Toslink cable
- Remote
- Kickstands (2)
- Wall bracket
- Wall Anchors (4)

FEATURES

SOUND BAR (FRONT)

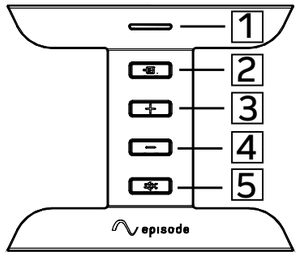

1. **SOURCE LED**
   Blue: Bluetooth input
   Red: Solid - Standby; Blinks Once - Volume level at max; Blinks Continuously - Muted
   Green: Toslink optical input
   Yellow: RCA Line Level Input
   Purple: Blink Once - EQ Off; Blinks Twice - EQ On
   White: Blink Once - Volume level at minimum; Blinks Twice - Dolby Digital source being decoded
2. **INPUT TOGGLE**
   Switch between all inputs; Digital, Analog, Bluetooth
3. **VOLUME UP**
   Increase volume level
4. **VOLUME DOWN**
   Decrease volume level
5. **MUTE**
   No volume

Feaures cont'd...

SOUNDBAR (REAR)

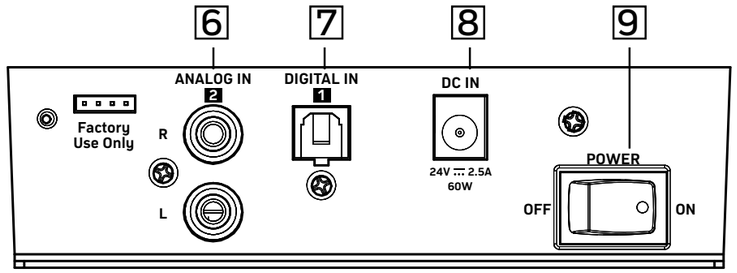

6. **RCA LINE LEVEL INPUT 2**
   RCA stereo input with left and right connections.
7. **TOSLINK OPTICAL INPUT 1**
   Digital optical input. Dolby Digital formats will be decoded.
8. **DC POWER IN**
   Power cord
9. **MASTER POWER SWITCH**
   Switch between ON/OFF

SUBWOOFER

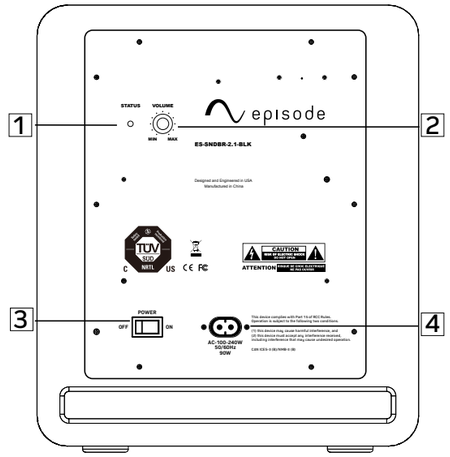

1. **STATUS LED**
   Red: Standby
   Blue: On
2. **VOLUME**
   Adjust master volume to the desired listening level
3. **MASTER POWER SWITCH**
   Switch between ON/OFF
4. **AC POWER IN**
   Power cord

REMOTE

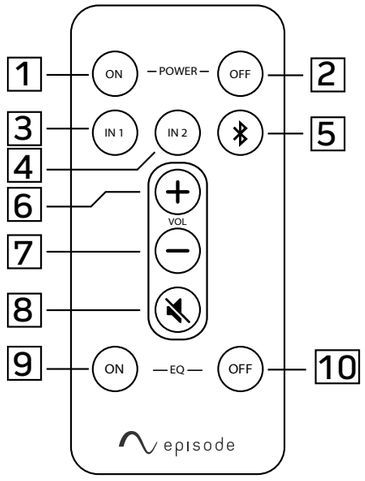

1. **ON**
2. **OFF**
3. **INPUT 1 - TOSLINK OPTICAL OUTPUT**
4. **INPUT 2 - RCA LINE LEVEL INPUT**
5. **BLUETOOTH INPUT**
6. **VOLUME UP**
   Increase volume level
7. **VOLUME DOWN**
   Decrease volume level
8. **MUTE**
   No volume
9. **EQ ON**
10. **EQ OFF**

SETUP

SOUNDBAR PLACEMENT

For most applications, placement should be below a flat screen TV on a cabinet top or shelf. Other options for placement include On-Wall using the included bracket, or attached to a Flat Panel mount using the optional Strong mount bracket.

INSTALLING ON OR IN A CABINET

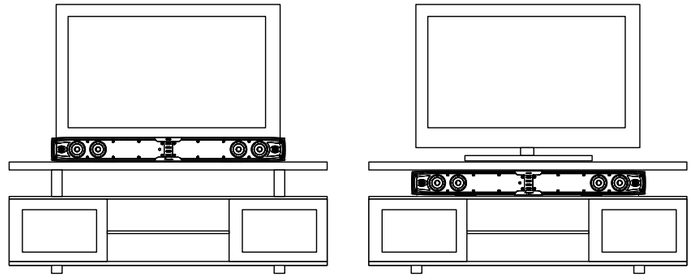

When placing the soundbar on a cabinet shelf, the front edge of the speaker should be flush with the front of the shelf. Placing the speaker further back on the shelf will degrade the sound quality of the speaker.

ATTACHING THE KICKSTAND

The kickstand for the soundbar allows for the angle of the soundbar to be adjusted to maintain proper audio performance. When placing the soundbar, adjust the kickstand height to angle the soundbar towards the listener's ears. See "Adjusting the Kickstand" for more information.

1. Place the included kickstands on the rear of soundbar as shown.
2. Using a shoulder bolt and washer for each kickstand, tighten to secure the dickstand to the soundbar.

ADJUSTING THE KICKSTAND

After installing the kickstand and placing the soundbar, adjust the angle of the speakers towards the listener's ears. If the speakers point away from the listener's ears, slide the kickstand up or down to achieve the proper angle. Note that the kickstand can be inverted when the soundbar is pointing down.

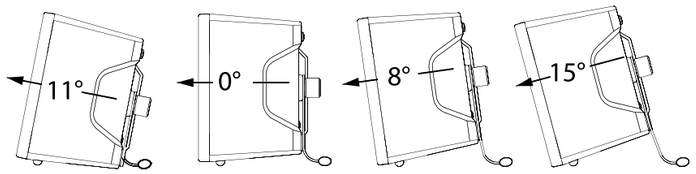

MOUNTING ON A WALL

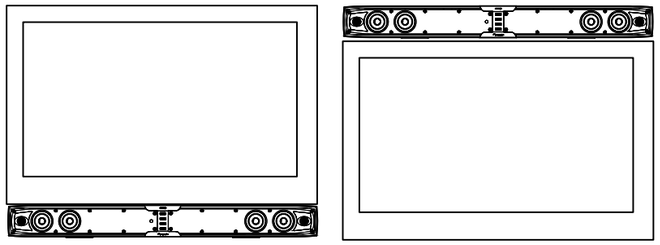

CONSIDERATIONS FOR WALL MOUNTING

To maintain a proper listening experience, the soundbar should be as close to the TV as possible. Placing the soundbar more than 3" from the screen will separate the audio from the video and provide a poor viewing and listening experience, keep this in mind when locating the soundbar.

ATTACHING THE WALL BRACKET

1. Mark the position of the bottom of the TV.
2. Mark the position of the TV's Center Point.
3. Remove the TV from the mount

INSTALLING THE MOUNT

1. Locate wall studs using a stud finder (not included).
2. Place the Bracket on the wall with the flat side towards the wall and the notched center mark facing up. The Soundbar Center mark should be located at the center point of the installed television.
3. Position the Bracket Vertical Center v groove 2 1/8 " from the bottom of the TV. This will place the soundbar flush with the bottom of the TV when installed.
4. Level the bracket and attach it to the wall studs using the horizontal screwhole slots. All 4 screws should be used, making sure to keep the bracket flat to the wall and securely attached.Note: If wall studs cannot be used, wall mollies or anchors with the appropriate weight rating for the soundbar can be used.
5. Clip the soundbar onto the bracket, and center by adjusting left to right.

INSTALLING ON A FLAT PANEL MOUNT

The Episode 2.1 Soundbar can be mounted directly to a Flat Panel Mount with the Strong™ SM-SBAR-BKT (available separately). Using the Flat Panel mount bracket allows for the speaker to move with the TV when mounted to articulating arm mounts. This provides an optimum listening experience for these installations.

SUBWOOFER PLACEMENT

Subwoofer placement can have an effect on the performance that you receive. All rooms are different, but the strongest output will likely occur if the subwoofer is placed in a corner of the room on the same wall as the soundbar. This is known as the boundary effect and will emphasize certain bass frequencies while canceling others. Some listeners will find this to be the best sounding result, while others may find it "boomy" or muddy. Experiment with the placement options available to you and use the tuning instructions that follow in the "FINE TUNE" section of this manual.

PROGRAMMING THE REMOTE

1. Connect power to the soundbar, and press the power button to awaken it from standby.
2. Press and hold MUTE on soundbar until the LED flashes yellow.
3. Press the button you wish to learn once (MUTE, VOLUME UP, VOLUME DOWN). LED will now be solid yellow.
4. Press the button on the TV remote you are trying to learn (MUTE, VOLUME UP, VOLUME DOWN) slowly four times.
5. LED will now be solid green.
6. Repeat for until MUTE, VOLUME UP, VOLUME DOWN are learned.

REMOTE CODES

Please visit the support tab of the product page for more information and available HEX codes.

COMMAND	NEC CODE
ON	13EC-12
OFF	13EC-1E
IN1	13EC-01
IN2	13EC-02
BLUETOOTH	13EC-03
VOLUME +	13EC-05
VOLUME -	13EC-08
MUTE	13EC-1B
EQ ON	13EC-0C
EQ OFF	13EC-0E

CONNECT

CAUTION: All connections and switching must be done with the device turned off. Connect power last to ensure that the device is off during all the connections and set up.

RCA LINE LEVEL

Use high-quality RCA cables that feature low impedance with adequate shielding and high-quality connectors.

TOSLINK CONNECTION

Use high-quality toslink/optical audio cables.

BLUETOOTH PAIRING

1. Use the soundbar's remote to select the bluetooth input.
2. Using the device that you would like to pair to the soundbar, access your bluetooth pairing menu.
3. Select "Episode 2.1 Soundbar".
4. Wait till the device pairs and displays "Connected".
5. Finally, select your device's audio output options, and select the "Episode 2.1 Soundbar".

FINE TUNE

SUBWOOFER LEVEL

After making all the connections and calibrating the loudspeakers, set up your Episode® subwoofer using the following steps:

1. Connect power to the subwoofer. The status LED will illuminate solid red when power is present and the subwoofer is on. LED will illuminate solid blue when soundbar is on.
2. Set volume dial at 50% or 12 o'clock.
3. Play a movie scene or music track and set the system volume to an average level. Listen to the bass level from the listening position.
4. Adjust the subwoofer VOLUME control as desired.

EQ

The EQ is set to brings out the dialog to replicate a 3 channel setup with only two channels. Determine if the best system settings using the following steps:

1. Play a movie scene during a acoustically chaotic scene and set the system volume to an average level with the EQ off. Listen to the dialog from the listening position.
2. Listen to the same scene with the EQ on.
3. Repeat steps 1 & 2 until the preferred setting is determined.

SPECIFICATIONS

Tweeter	Two - .75" Soft Dome
Woofer:	Four - 3" Polypropylene
Subwoofer:	8" Polypropylene
Color:	Black
Power Handling (Peak):	250 w
Frequency Response	35 Hz - 20 KHz
Input Power (Soundbar):	100-240 VAC, ~50/60 Hz
Input Power (Subwoofer):	100-240 VAC, ~50/60 Hz, 90W
Inputs:	Digital Optical, RCA and Bluetooth Inputs
Subwoofer Adjustments:	Volume, On/Off
Weight (Soundbar):	7.3 lbs 35ºC
Weight (Subwoofer):	20.1 lbs 35ºC
Grill Type:	Acoustically Transparent Cloth
Soundbar Finished Dimensions	4.51" H x 43.9" W x 3.08" D
Soundbar Finished Dimensions incl Wall Mount Bracket	4.51" H x 43.9" W x 3.33" D
Subwoofer Finished Dimensions	9.88" W x 11.57" H x 12.96" D
Subwoofer Finished Dimensions incl Volume Knob	9.88" W x 11.57" H x 13.53" D
Sold As	Each

WARRANTY

10/2-Year Limited Warranty

Episode® powered speakers have a 2-Year Warranty on the amplifier and a 10-Year Warranty on all other included devices and accessories. This warranty includes parts and labor repairs on all components found to be defective in material or workmanship under normal conditions of use. This warranty shall not apply to products which have been abused, modified or disassembled. Products to be repaired under this warranty must be returned to SnapAV or a designated service center with prior notification and an assigned return authorization number (RA).

CONTACTING TECHNICAL SUPPORT

Phone: (866) 838-5052

Email: Techsupport@snapav.com