INSIGNIA

v1
R1

USER GUIDE

Mini 2.0 Soundbar with Bluetooth

NS-SB216

FPO

Before using your new product, please read these instructions to prevent any damage.

Contents

Introduction 2
Important safety instructions 2
Package contents 5
Features 5
Using the remote control 8
Setting up your soundbar 8
First step - Choosing your connection 8
Second step - Connecting your soundbar - Pick one 9
Third step - Connecting the AC adapter 10
Connecting your soundbar using Bluetooth 11
Using your soundbar 13
Maintaining your soundbar 14
Troubleshooting 15
Specifications 16
Legal notices 17
ONE-YEAR LIMITED WARRANTY 18

Introduction

Congratulations on your purchase of an Insignia Mini 2.0 Soundbar with Bluetooth. The soundbar is designed to be suitable for use with today's flat panel TVs. It features a variety of connections, including Bluetooth, and it can either be mounted on the wall or placed on a TV stand.

This user guide explains how to correctly install, operate, and get the best performance from your soundbar. Read this user guide carefully before installing your system, and then keep it handy for quick reference.

Important safety instructions

1. Read these instructions.
2. Keep these instructions.
3. Heed all warnings.
4. Follow all instructions.
5. Do not use this apparatus near water.
6. Clean only with dry cloth.
7. Do not block any ventilation openings. Install in accordance with the manufacturer's instructions.

8 Do not install near any heat sources such as radiators, heat registers, stoves, or other apparatus (including amplifiers) that produce heat.

9 Do not defeat the safety purpose of the polarized or grounding-type plug. A polarized plug has two blades with one wider than the other. A grounding type plug has two blades and a third grounding prong. The wide blade or the third prong are provided for your safety. If the provided plug does not fit into your outlet, consult an electrician for replacement of the obsolete outlet.

10 Protect the power cord from being walked on or pinched particularly at plugs, convenience receptacles, and the point where they exit from the apparatus.

11 Only use attachments/accessories specified by the manufacturer.

12 Use only with the cart, stand, tripod, bracket, or table specified by the manufacturer, or sold with the apparatus. When a cart is used, use caution when moving the cart/apparatus combination to avoid injury from tip-over.

13 Unplug this apparatus during lightning storms or when unused for long periods of time.

14 Refer all servicing to qualified service personnel. Servicing is required when the apparatus has been damaged in any way, such as power-supply cord or plug is damaged, liquid has been spilled or objects have fallen into the apparatus, the apparatus has been exposed to rain or moisture, does not operate normally, or has been dropped.

15 To reduce the risk of fire or electric shock, do not expose this device to rain, moisture, dripping, or splashing, and no objects filled with liquids, such as vases, shall be placed on it.

16 An apparatus with a three-prong, grounding-type plug is a Class I apparatus, which needs to be grounded to prevent possible electric shock. Make sure that you connect any Class I device to a grounding-type, three-prong outlet.

17 DO NOT overload wall outlets or extension cords beyond their rated capacity as this can cause electric shock or fire.

18 The wall plug is the disconnecting device. The plug must remain readily operable.

19 No naked flame sources, such as lighted candles, should be placed on the apparatus.

20 The ventilation should not be impeded by covering the ventilation openings with items, such as newspapers, tablecloths, curtains, etc.

21 The remote control supplied with this product contains a coin/button cell battery. If the coin/button cell battery is swallowed, it can cause severe internal burns in just 2 hours and can lead to death.

22 Batteries should not be exposed to excessive heat such as sunshine, fire, or the like.

Warning

Danger of explosion if the remote control battery is incorrectly replaced. Replace only with the same or equivalent type.

23 Keep new and used batteries away from children.

24 If the battery compartment does not close securely, stop using the product and keep it away from children.

25 If you think batteries might have been swallowed or placed inside any part of the body, seek immediate medical attention.

The lightning flash with arrowhead symbol within an equilateral triangle is intended to alert the user to the presence of uninsulated "dangerous voltage" within the product's enclosure that may be of sufficient magnitude to constitute a risk of electrical shock to persons.

The exclamation point, within an equilateral triangle, is intended to alert the user to the presence of important operating and maintenance (servicing) instructions in the literature accompanying the product.

Placement

- The soundbar cabinet is made out of plastic and is therefore sensitive to extreme temperatures and humidity. Do not put it in locations subject to direct sunlight or in humid places, such as near an air conditioner, humidifier, bathroom, or kitchen.
- Do not put water or other liquids close to the soundbar. If liquid is spilled on top of the soundbar, it may be damaged.
- The soundbar should be placed on a sturdy, flat surface that is free from vibration, or mounted on a wall. Do not put the soundbar on an uneven or unstable surface, where it may fall and cause damage.

Using close to a TV or computer

Some older TVs and computer monitors are magnetically sensitive devices. They are likely to suffer discoloration or picture distortion when conventional speakers are placed nearby. If discoloration problems persist, try moving the soundbar away from your TV or monitor.

Package contents

Soundbar

Remote control

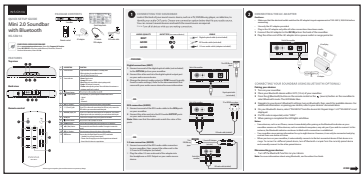

Quick Setup Guide

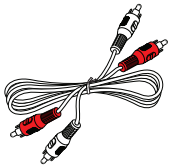

RCA Audio Cable

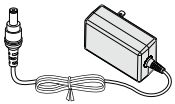

AC Adapter

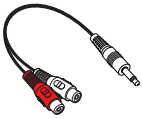

3.5 mm to RCA adapter

Features

Top view

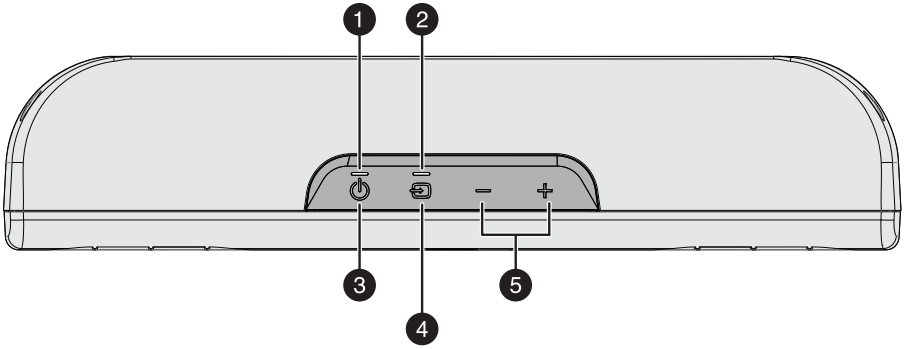

#	Item	Description
1	Power indicator	• Lights red when the soundbar is in standby mode. • Blinks red when the soundbar is muted. • Turns off when the power is on.
2	Source indicator	• **Green**: Optical source • **Orange**: RCA source • **Blue**: Bluetooth source (blinks when in pairing mode) • **Purple**: DSP selected (on remote) • **Flashes**: when adjusting volume. Turns solid when the maximum or minimum sound level is reached.
3	⏻ (Power) button	Press to turn on the soundbar on and off.

#	Item	Description
4	(source) button	Press repeatedly to cycle through the available sound sources: • Optical • RCA • Bluetooth
5	**VOL –** / **VOL +** buttons	Press to decrease or increase the volume of the soundbar.

Back view

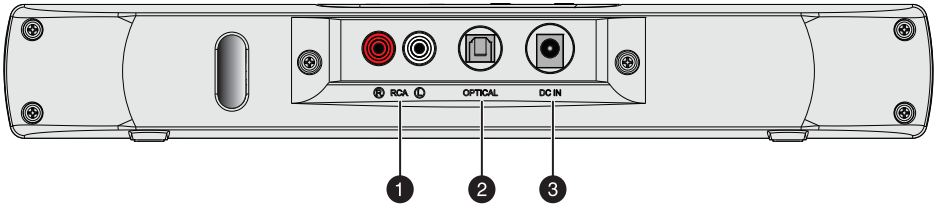

#	Item	Description
1	**RCA** (R and L) jacks	If your TV (or other audio source device) has RCA out jacks, connect the RCA cables to your source device and these jacks.
2	**OPTICAL** (input) jack	If your TV (or other audio source device) has an optical out jack, connect a digital optical cable (not included) to your source device and this jack.
3	**DC IN** jack	Connect the AC adapter to this jack to power the soundbar.

Remote control

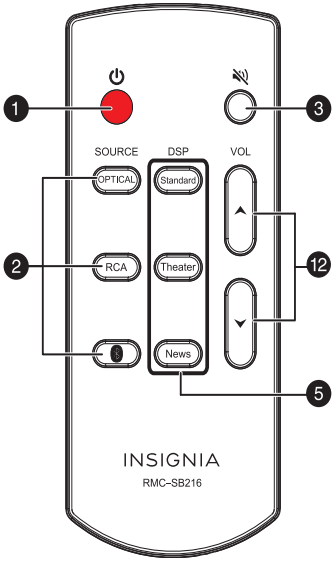

#	Item	Description
1	⏻ (Power) button	Press to turn on the soundbar. Press again to put the soundbar into standby mode.
2	**SOURCE** buttons	Press to select the sound source. Select Optical, RCA, or ᛒ (Bluetooth).
3	🔇 (Mute) button	Press to mute the sound from the soundbar. Press again to restore the sound.
4	**VOL +/–** buttons	Press to increase or decrease the volume of the soundbar.
5	**DSP** buttons	Press to select the Digital Signal Processor (DSP) sound mode: • Standard - Lets you enjoy normal sound. • Theater - Best for enjoying movies. Bass frequencies are enhanced. • News - Select for clear voice reproduction.

Using the remote control

1. Remove the plastic tab from the battery compartment before using the remote control for the first time.
2. Point the remote control directly at the IR sensor on the front of the soundbar. You must be within approximately 23 ft. (7 m) of the soundbar.

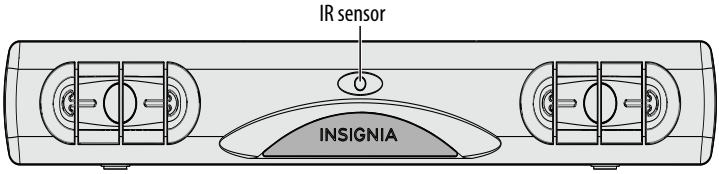

Cautions

- Do not spill water or any liquid on the remote control.
- Do not place the remote control on a wet surface.
- Do not place the remote control in direct sunlight or near sources of excessive heat.
- If the remote control is not going to be used for a long time, remove the battery to avoid any damage that may be caused by leakage and corrosion.

Setting up your soundbar

First step - Choosing your connection

- Look at the back of your sound source device, such as a TV, DVD/Blu-ray player, or cable box, to identify your audio output ports. Choose one connection option below that fits your audio source. You can connect several devices and switch the sound source as required.

Caution

Turn off all devices while you are making connections.

Audio Quality	Jack Type (on source device)	Cable
Best		Digital Optical cable (not included). See “Digital Optical connection (best)” on page 9.
Good		RCA audio cable (included). See “RCA connection (good)” on page 10.
Good		3.5 mm audio cable adapter (included). See “3.5mm connection (good)” on page 10.

Second step - Connecting your soundbar - Pick one

Digital Optical connection (best)

1 Connect one end of the digital optical cable (not included) to the **DIGITAL OPTICAL OUTPUT** jack on your soundbar.

2 Connect the other end into the **Digital Optical Output** port on your audio source device.

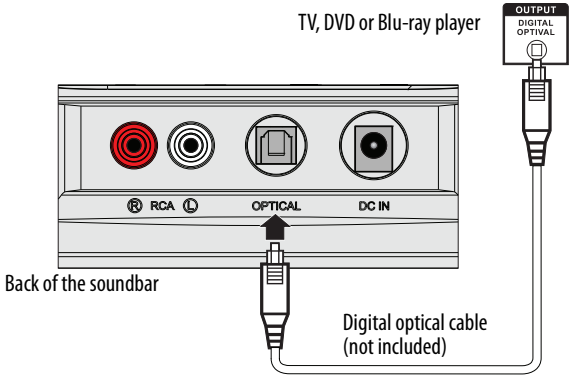

3 Change the device's audio output to 'PCM' format (typically found in audio settings). Refer to the documentation that came with your audio source device for more information.

RCA connection (good)

1 Connect one end of the RCA audio cable to the **RCA** ports on your soundbar.

2 Connect the other end into the audio **OUTPUT** ports on your audio source device.

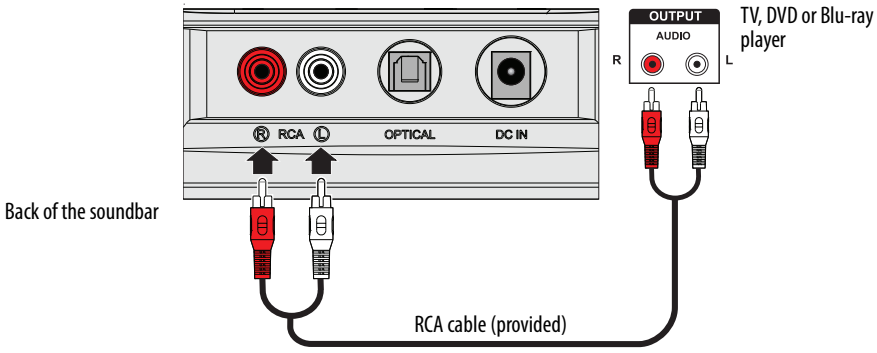

Note

Make sure that the cable ends match the color of the ports.

3.5mm connection (good)

1 Connect one end of the RCA audio cable connectors to your soundbar, then connect the other end to the 3.5 mm to RCA adapter (included).

2 Connect the other end of the adapter into the headphone or **AUX Output** on your audio source device.

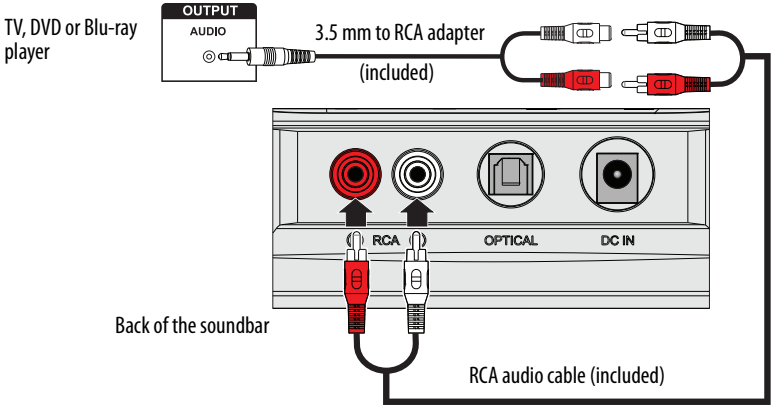

Third step - Connecting the AC adapter

After you have connected your soundbar to an audio source, you need to connect it to an AC power outlet.

Cautions

- Make sure that the electrical outlet matches the AC adapter's input requirements of 100-240 V, 50/60 Hz before connecting.
- Use only the AC adapter provided.
- Plug in the AC adapter only after all other connections have been made.

1 Connect the AC adapter to the **DC IN** jack on the back of the soundbar.

2 Plug the other end of the AC adapter into a power outlet or surge protector.

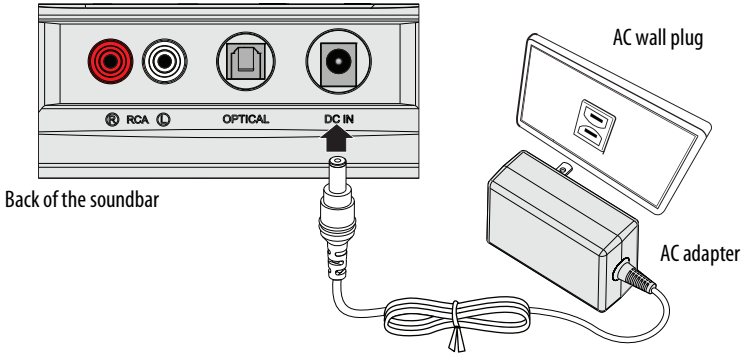

Connecting your soundbar using Bluetooth

Before you can use your soundbar with a Bluetooth device, you need to pair your device to the soundbar. In order to pair the devices, do the following:

Pairing your devices

1 Turn on your soundbar.
2 Place the Bluetooth device within 30 ft. (10 m) of your soundbar.
3 Press the ✱ (Bluetooth) button on the remote control or the ⊡ (source) button on the soundbar to select Bluetooth mode. The LED blinks blue.
4 Navigate to your device's Bluetooth settings, turn on Bluetooth, then search for available devices. For additional information on pairing your device, see your device's documentation.
5 On your Bluetooth device, select "NS-SB216" from the device list. Repeat steps 1-2 if "NS-SB216" is not displayed.
6 If a PIN code is requested, enter "0000."

7 When pairing is complete, the LED lights solid blue.

Notes

- Some devices, such as an iPhone, connect immediately after pairing so the Bluetooth indicator on your soundbar remains on. Other devices, such as notebook computers, may ask you if you wish to connect. In this instance, the Bluetooth indicator continues to blink until a connection is established.
- Your soundbar saves pairing information for up to eight devices. However, it can only be connected and play content from one device at a time.
- When you turn on your soundbar, it automatically connects to the last connected device if that device is in range. To connect to a different paired device, turn off Bluetooth or unpair from the currently paired device and manually connect to the other paired device.

Disconnecting your devices

- Turn off the Bluetooth function on your device.

Reconnecting to a paired device

When your soundbar is not paired to a device, the LED indicator blinks slowly.

Your soundbar loses the Bluetooth connection if you…	To reconnect...
Turn it off.	Turn on your soundbar. Your soundbar searches for the last connected Bluetooth device and reconnects.
Move the Bluetooth device out of range.	Move your Bluetooth device within 30 feet of your soundbar.
Turn off your Bluetooth device.	Turn on your Bluetooth device, then make sure that Bluetooth is on.
Turn off Bluetooth on your Bluetooth device.	Turn on Bluetooth on your Bluetooth device.
Connect your Bluetooth device to another Bluetooth device.	Disconnect your Bluetooth device from the other Bluetooth device, then set your device to pairing mode. Select “NS-SB216” on your Bluetooth device.

Note

If a device does not automatically reconnect, you may need to reselect “NS-SB216” on your Bluetooth device.

Connecting to a different device

1. On your Bluetooth device you are currently connected to, turn off the Bluetooth function or unpair the soundbar in your Bluetooth device list. The soundbar can now be connected to another Bluetooth Device.
2. Follow the section "Connecting your soundbar using Bluetooth" on page 11 to connect a new device.

Receiving a phone call while playing music

- When a call is received while playing music through a phone, the music stops automatically.
- When the call ends, depending on the setting of your phone, the current track may resume playback.

Using your soundbar

This system lets you to access three different sound sources (Optical, RCA, and Bluetooth).

Listening to your soundbar

1. Press the ⏻ (Power) button on your soundbar. The power indicator turns off and the source indicator lights.
2. Turn on the audio source device connected to your soundbar and begin playback.
3. Press the button on the soundbar repeatedly to select the audio source or press the selected source button on the remote control until you hear sound from your soundbar.

Note

If you use the OPTICAL connection, you must change your device's audio output setting to "PCM" format. Refer to the manual you received with your audio source device for additional information.

4. Adjust the volume on your soundbar or the source audio device to a comfortable level.

Warning

Continuous use of high volume sound may permanently damage your hearing.

5. Press the ⏻ (Power) button to turn off your soundbar. The power indicator lights red.

Maintaining your soundbar

Cleaning your soundbar (Please verify)

Clean the surface of your soundbar with a soft cloth (damp?).

Replacing the remote control battery

1 Squeeze the battery tray's sides together and slide it out of the remote control.

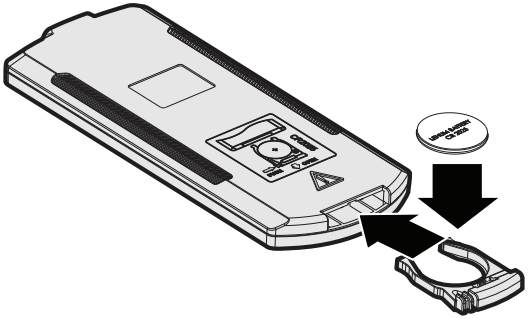

2 Remove the old battery and insert the new 3V lithium battery (CR2025) into the battery tray. Match the polarity of the new battery with the plus sign (+) in the battery tray.

3 Slide the battery tray back into the battery compartment until it clicks into place.

Cautions

- The battery should not be exposed to excessive heat, such as sunshine, heat registers, or fire.
- Battery chemicals can cause a rash. If the battery leaks, clean the battery compartment with a cloth. If chemicals touch your skin, wash immediately.
- Make sure that the battery is disposed of correctly. Do not burn or incinerate.

Notes

- Remove the battery when the charge is depleted.
- If the remote control is not going to be used for a long time, remove the battery to avoid any damage that may be caused by leakage and corrosion.

Troubleshooting

Check this list for a possible troubleshooting solution before calling for service.

Problem	Possible Solutions
The power does not come on.	• Make sure that the AC adapter is securely plugged into the power outlet and the soundbar.
The remote control does not work.	• Remove any obstacles between the remote control and the IR sensor on the soundbar. • Replace the battery. • Move closer to the soundbar. The remote control is effective to approximately 23 ft. (7 m).
There is no sound or very low-level sound is heard from the soundbar.	• Make sure that you are connected to an audio **OUTPUT** jack on your sound source. The port will not send audio out if it is an input jack. • Make sure that the volume level of the soundbar is set to an adequate level. • If you are using Bluetooth, turn up the volume on your Bluetooth device. • Make sure that the volume level is not muted. Press the 🔇 (mute) button on the remote control again to restore the sound output. • Make sure that the correct audio source is selected. Press the button repeatedly to switch to the correct audio source. • Make sure that the power is on and all connections are secure. • If you are using a 3.5 mm cable connection, make sure that the volume is turned up on your sound source. • If you are using the **OPTICAL** connection, make sure that the source device's audio source is set to "PCM" format. Refer to the documentation your received with the audio source device (such as a TV or DVD/Blu-ray player) for additional information. • Make sure that the audio cable you are using is not damaged or broken. Try using another one.
Your soundbar is not working properly.	• Unplug the AC adapter from the wall outlet and then try plugging it in again after 30 seconds. • If you are using the **OPTICAL** connection, make sure that the source device's audio source is set to "PCM" format. Refer to the documentation your received with the audio source device (such as a TV, DVD/Blu-ray player) for additional information. • Make sure that the audio cable you are using is not damaged or broken. Try using another one.
The sound is breaking up or buzzing.	• Make sure that you are connected to an audio **OUTPUT** jack on your sound source. The port will not send audio out if it is an input jack. • Make sure that all connections are secure and cables are not broken or damaged. • If you are using the **OPTICAL** connection, make sure that the source device's audio source is set to "PCM" format. Refer to the documentation your received with the audio source device (such as a TV or DVD/Blu-ray player) for additional information. • Connect to a different source device (such as a TV or DVD/Blu-ray player) to see if the buzzing still occurs. If it does not, this may indicate an issue with the original source device. • Use a different connection method (for example, try optical instead of RCA) between the soundbar and the source device to make sure that the jacks on both devices are still working. • Make sure that the audio cable you are using is not damaged or broken. Try using another one.

Problem	Possible Solutions
I can hear sound from both my TV and my soundbar.	• Turn off or mute the internal speakers of your TV. Refer to the TV's manual for instructions.
My TV remote does not control my soundbar.	• In most cases, your TV remote will not control your soundbar.
There is no sound or low volume in Bluetooth mode.	• Make sure that your Bluetooth device is turned on, Bluetooth is turned on, and "NS-SB216" is selected. • Turn up the volume on your soundbar. • Turn up the volume on your Bluetooth device. • Make sure that your Bluetooth device is not muted. • Make sure that you are playing music from your Bluetooth device. • Make sure that you have selected the Bluetooth source on your soundbar. • Make sure that your soundbar is not paired to another Bluetooth device. • Make sure that your Bluetooth device is not paired to a different Bluetooth speaker.
My soundbar won't connect to my Bluetooth device.	• Shorten the distance between your soundbar and your Bluetooth device. • Turn your devices off, then on. Re-pair your soundbar and your Bluetooth device. • Make sure that your soundbar is not paired to another Bluetooth device. • Make sure that your soundbar and Bluetooth device are both in pairing mode. • Make sure that your Bluetooth device is not connected to any other device. • Make sure that you have selected "NS-SB216" on your Bluetooth device.
My Bluetooth device keeps unpairing.	• Shorten the distance between your soundbar and your Bluetooth device. • If the battery on your Bluetooth device is low, recharge the battery.
"NS-216" does not appear on my Bluetooth device.	• Shorten the distance between your soundbar and your Bluetooth device. • Put your soundbar into pairing mode, then refresh your list of Bluetooth devices. For more information, see the documentation that came with your Bluetooth device. • Make sure that your Bluetooth device is visible to other devices. For more information, see the documentation that came with your Bluetooth device.

Specifications

Designs and specifications are subject to change without notice.

Power output	16 W total : left and right channel XX W (10% THD+N)
Frequency response	
Dimensions (approx.) (W × D × H)	12.6 x 2.7 x 1.8 in. (32.0 x 6.9 x 4.6 cm)
Weight	1.54 lbs (0.7 kg)
Battery	3V lithium battery (CR2025)
Inputs	RCA stereo audio Digital optical audio Bluetooth

Legal notices

FCC Part 15

This device complies with Part 15 of the FCC Rules. Operation of this product is subject to the following two conditions: (1) this device may not cause harmful interference, and (2) this device must accept any interference received, including interference that may cause undesired operation.

This equipment has been tested and found to comply within the limits for a class B digital device, pursuant to Part 15 of the FCC Rules. These limits are designed to provide reasonable protection against harmful interference in a residential installation. This equipment generates, uses, and can radiate radio frequency energy and, if not installed and used in accordance with the instructions, may cause harmful interference to radio communications. However, there is no guarantee that interference will not occur in a particular installation. If this equipment does cause harmful interference to radio or television reception, which can be determined by turning the equipment off and on, the user is encouraged to try to correct the interference by one or more of the following measures:

- Reorient or relocate the receiving antenna.
- Increase the separation between the equipment and receiver.
- Connect the equipment into an outlet on a circuit different from that to which the receiver is connected.
- Consult the dealer or an experienced technician for help.

FCC warning

Changes or modifications not expressly approved by the party responsible for compliance with the FCC Rules could void the user's authority to operate this equipment.

Canada IC statement

This device complies with Industry license-exempt RSS standard(s). Operation is subject to the following two conditions: (1) this device may not cause interference, and (2) this device must accept any interference, including interference that may cause undesired operation of the device.

Ce dispositif est conforme à la norme de l'industrie RSS exempts de licence (s). Son fonctionnement est soumis aux deux conditions suivantes: (1) cet appareil ne peut pas provoquer d'interférences et (2) cet appareil doit accepter toute interférence, y compris les interférences qui peuvent causer un mauvais fonctionnement du dispositif."

This equipment complies with IC radiation exposure limits set forth for an uncontrolled environment.

Cet équipement est conforme à l'exposition aux rayonnements IC limites établies pour un environnement non contrôlé.

ONE-YEAR LIMITED WARRANTY

Definitions:

The Distributor* of Insignia branded products warrants to you, the original purchaser of this new Insignia-branded product ("Product"), that the Product shall be free of defects in the original manufacturer of the material or workmanship for a period of one (1) year from the date of your purchase of the Product ("Warranty Period").

For this warranty to apply, your Product must be purchased in the United States or Canada from a Best Buy branded retail store or online at www.bestbuy.com or www.bestbuy.ca and is packaged with this warranty statement.

How long does the coverage last?

The Warranty Period lasts for 1 year (365 days) from the date you purchased the Product. Your purchase date is printed on the receipt you received with the Product.

What does this warranty cover?

During the Warranty Period, if the original manufacture of the material or workmanship of the Product is determined to be defective by an authorized Insignia repair center or store personnel, Insignia will (at its sole option): (1) repair the Product with new or rebuilt parts; or (2) replace the Product at no charge with new or rebuilt comparable products or parts. Products and parts replaced under this warranty become the property of Insignia and are not returned to you. If service of Products or parts are required after the Warranty Period expires, you must pay all labor and parts charges. This warranty lasts as long as you own your Insignia Product during the Warranty Period. Warranty coverage terminates if you sell or otherwise transfer the Product.

How to obtain warranty service?

If you purchased the Product at a Best Buy retail store location, please take your original receipt and the Product to any Best Buy store. Make sure that you place the Product in its original packaging or packaging that provides the same amount of protection as the original packaging. If you purchased the Product from a Best Buy online web site (www.bestbuy.com or www.bestbuy.ca), mail your original receipt and the Product to the address listed on the web site. Make sure that you put the Product in its original packaging or packaging that provides the same amount of protection as the original packaging.

To obtain warranty service, in the United States call 1-888-BESTBUY or in Canada call 1-866-BESTBUY. Call agents may diagnose and correct the issue over the phone.

Where is the warranty valid?

This warranty is valid only in the United States and Canada at Best Buy branded retail stores or websites to the original purchaser of the product in the county where the original purchase was made.

What does the warranty not cover?

This warranty does not cover:

- Customer instruction/education
- Installation
- Set up adjustments
- Cosmetic damage
- Damage due to weather, lightning, and other acts of God, such as power surges
- Accidental damage
- Misuse
- Abuse
- Negligence
- Commercial purposes/use, including but not limited to use in a place of business or in communal areas of a multiple dwelling condominium or apartment complex, or otherwise used in a place of other than a private home.

- Modification of any part of the Product, including the antenna
- Display panel damaged by static (non-moving) images applied for lengthy periods (burn-in).
- Damage due to incorrect operation or maintenance
- Connection to an incorrect voltage or power supply
- Attempted repair by any person not authorized by Insignia to service the Product
- Products sold “as is” or “with all faults”
- Consumables, including but not limited to batteries (i.e. AA, AAA, C etc.)
- Products where the factory applied serial number has been altered or removed
- Loss or Theft of this product or any part of the product
- Display panels containing up to three (3) pixel failures (dots that are dark or incorrectly illuminated) grouped in an area smaller than one tenth (1/10) of the display size or up to five (5) pixel failures throughout the display. (Pixel based displays may contain a limited number of pixels that may not function normally.)
- Failures or Damage caused by any contact including but not limited to liquids, gels or pastes.

REPAIR REPLACEMENT AS PROVIDED UNDER THIS WARRANTY IS YOUR EXCLUSIVE REMEDY FOR BREACH OF WARRANTY. INSIGNIA SHALL NOT BE LIABLE FOR ANY INCIDENTAL OR CONSEQUENTIAL DAMAGES FOR THE BREACH OF ANY EXPRESS OR IMPLIED WARRANTY ON THIS PRODUCT, INCLUDING, BUT NOT LIMITED TO, LOST DATA, LOSS OF USE OF YOUR PRODUCT, LOST BUSINESS OR LOST PROFITS. INSIGNIA PRODUCTS MAKES NO OTHER EXPRESS WARRANTIES WITH RESPECT TO THE PRODUCT, ALL EXPRESS AND IMPLIED WARRANTIES FOR THE PRODUCT, INCLUDING, BUT NOT LIMITED TO, ANY IMPLIED WARRANTIES OF AND CONDITIONS OF MERCHANTABILITY AND FITNESS FOR A PARTICULAR PURPOSE, ARE LIMITED IN DURATION TO THE WARRANTY PERIOD SET FORTH ABOVE AND NO WARRANTIES, WHETHER EXPRESS OR IMPLIED, WILL APPLY AFTER THE WARRANTY PERIOD. SOME STATES, PROVINCES AND JURISDICTIONS DO NOT ALLOW LIMITATIONS ON HOW LONG AN IMPLIED WARRANTY LASTS, SO THE ABOVE LIMITATION MAY NOT APPLY TO YOU. THIS WARRANTY GIVES YOU SPECIFIC LEGAL RIGHTS, AND YOU MAY ALSO HAVE OTHER RIGHTS, WHICH VARY FROM STATE TO STATE OR PROVINCE TO PROVINCE.

Contact Insignia:

For customer service please call 1-877-467-4289 (U.S. and Canada) or 01-800-926-3000 (Mexico)

www.insigniaproducts.com

INSIGNIA is a trademark of Best Buy and its affiliated companies.

Distributed by Best Buy Purchasing, LLC

©2016 Best Buy. All rights reserved.

Made in China

INSIGNIA™

www.insigniaproducts.com
1-877-467-4289 (U.S. and Canada) or 01-800-926-3000 (Mexico)

INSIGNIA is a trademark of Best Buy and its affiliated companies.
Distributed by Best Buy Purchasing, LLC
©2016 Best Buy. All rights reserved.
Made in China.

V1 ENGLISH
16-0248