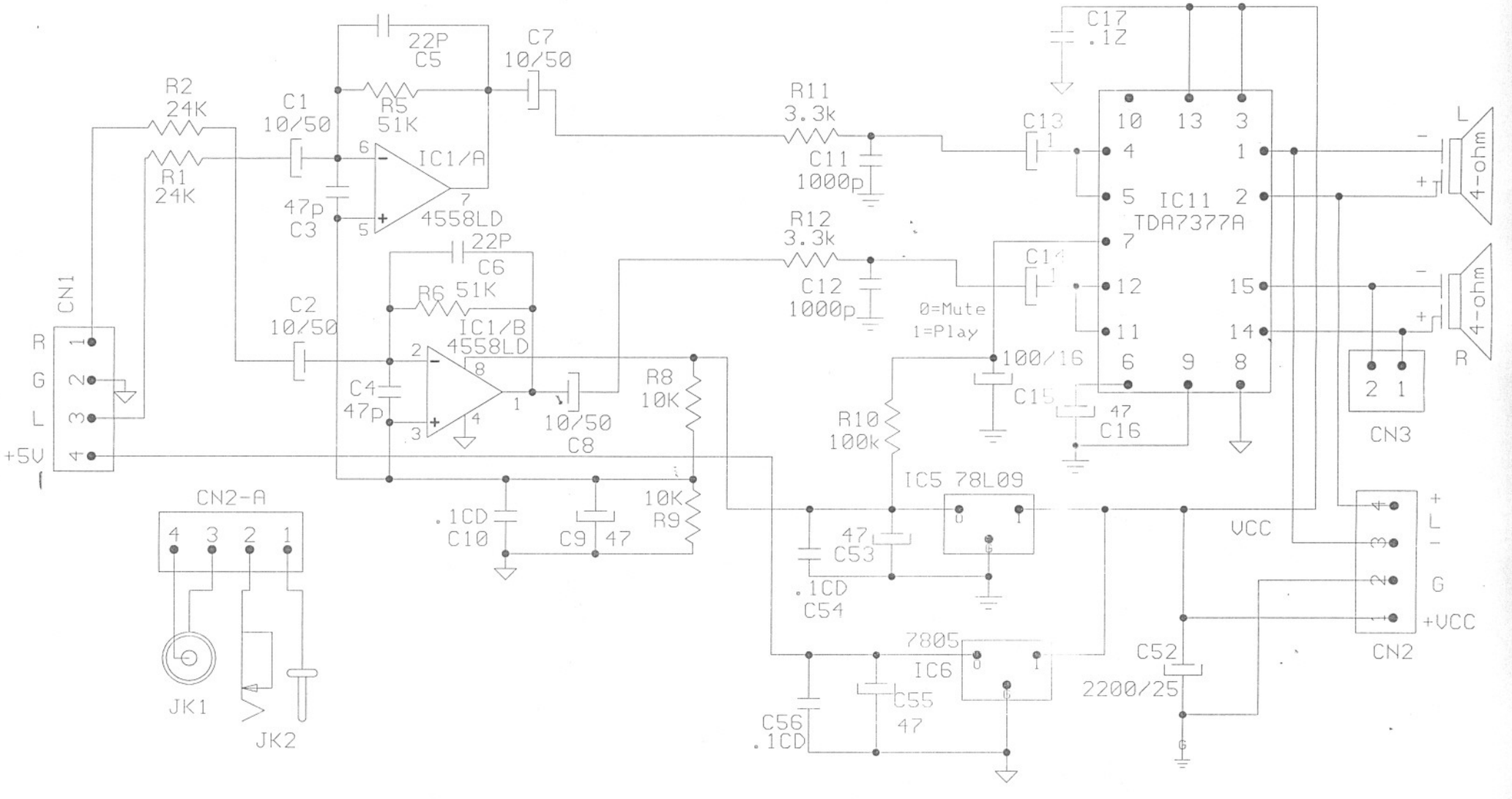
CN1
R
G
L
+5V
R2
24K
R1
24K
C1
10/50
C2
10/50
22P
C5
R5
51K
47p
C3
IC1/A
4558LD
22P
C6
R6 51K
IC1/B
4558LD
C4
47p
C7
10/50
10/50
C8
R8
10K
10K
R9
.1CD
C10
C9 47
CN2-A
JK1
JK2
R11
3.3k
C11
1000p
R12
3.3k
C12
1000p
C17
.1Z
C13
C14
0=Mute
1=Play
100/16
C15
R10
100k
IC5 78L09
47
C53
.1CD
C54
7805
IC6
C55
47
C56
.1CD
IC11
TDA7377A
47
C16
VCC
C52
2200/25
CN3
CN2
L
G
+VCC
4-ohm
4-ohm
L
R

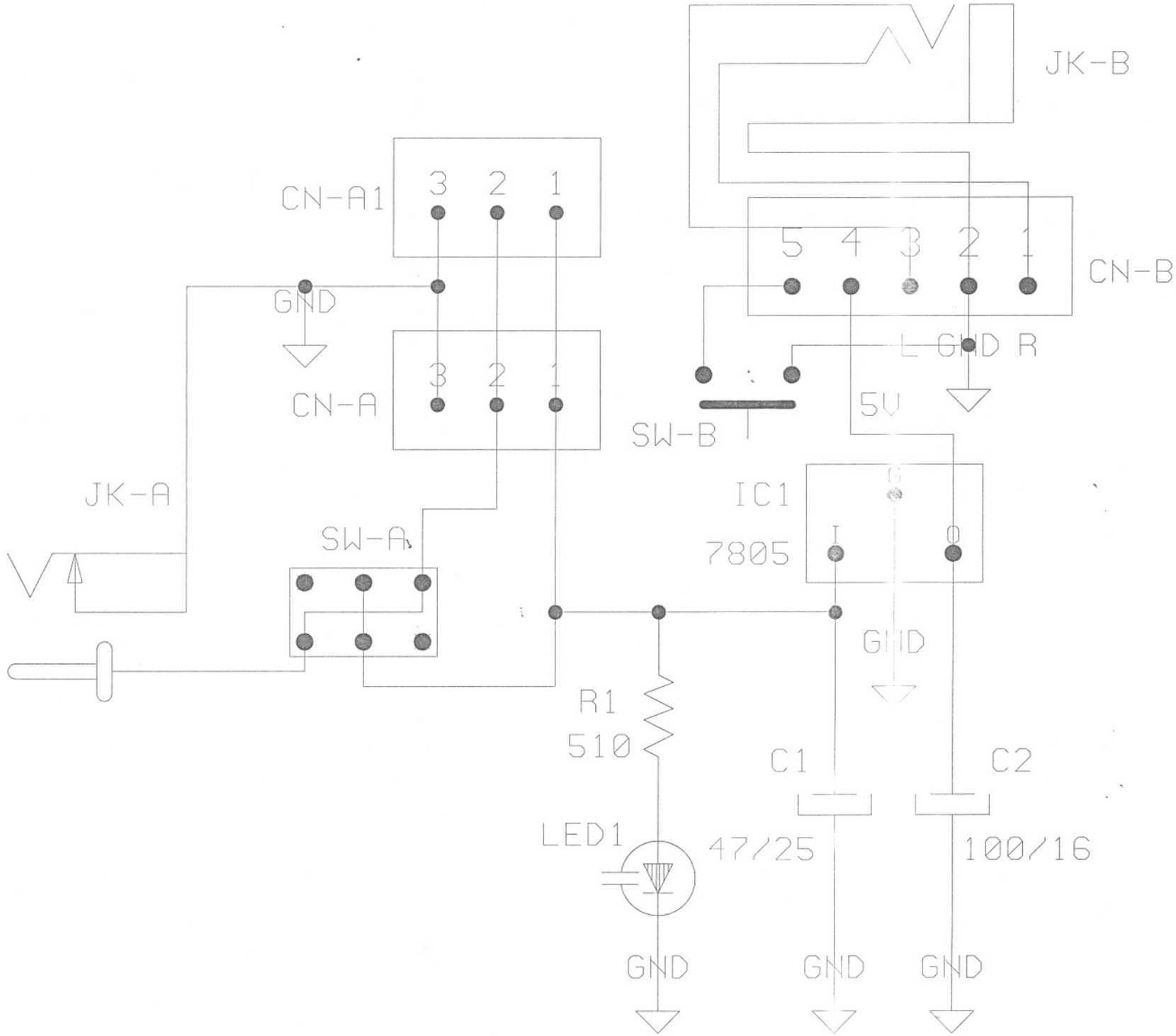
JK-B
CN-A1
3 2 1
5 4 3 2 1
CN-B
GND
L GND R
CN-A
3 2 1
5V
SW-B
JK-A
IC1
G
7805
I
O
SW-A
GND
R1
510
C1
C2
LED1
47/25
100/16
GND
GND
GND

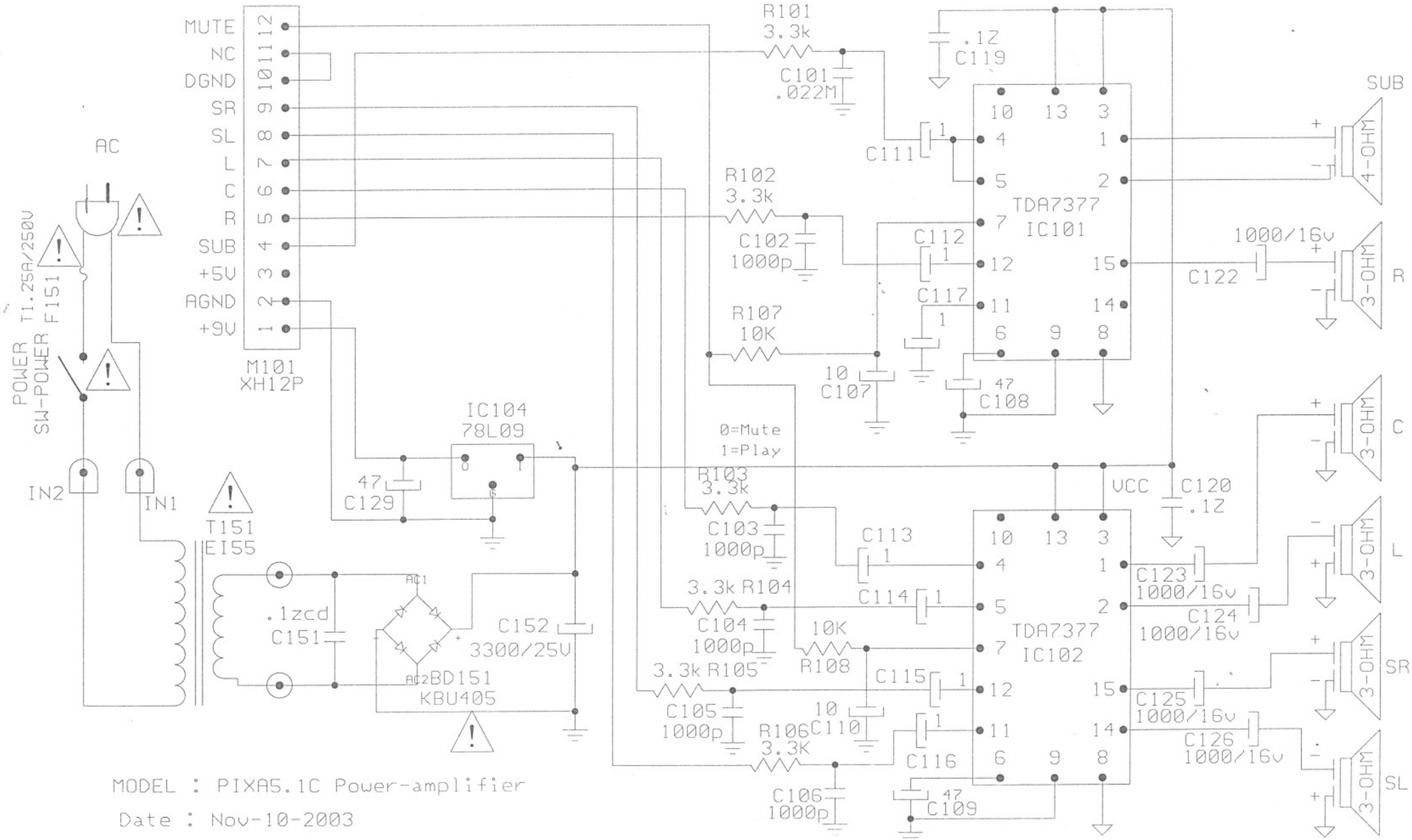

MODEL : PIXA5.1C Power-amplifier

Date : Nov-10-2003

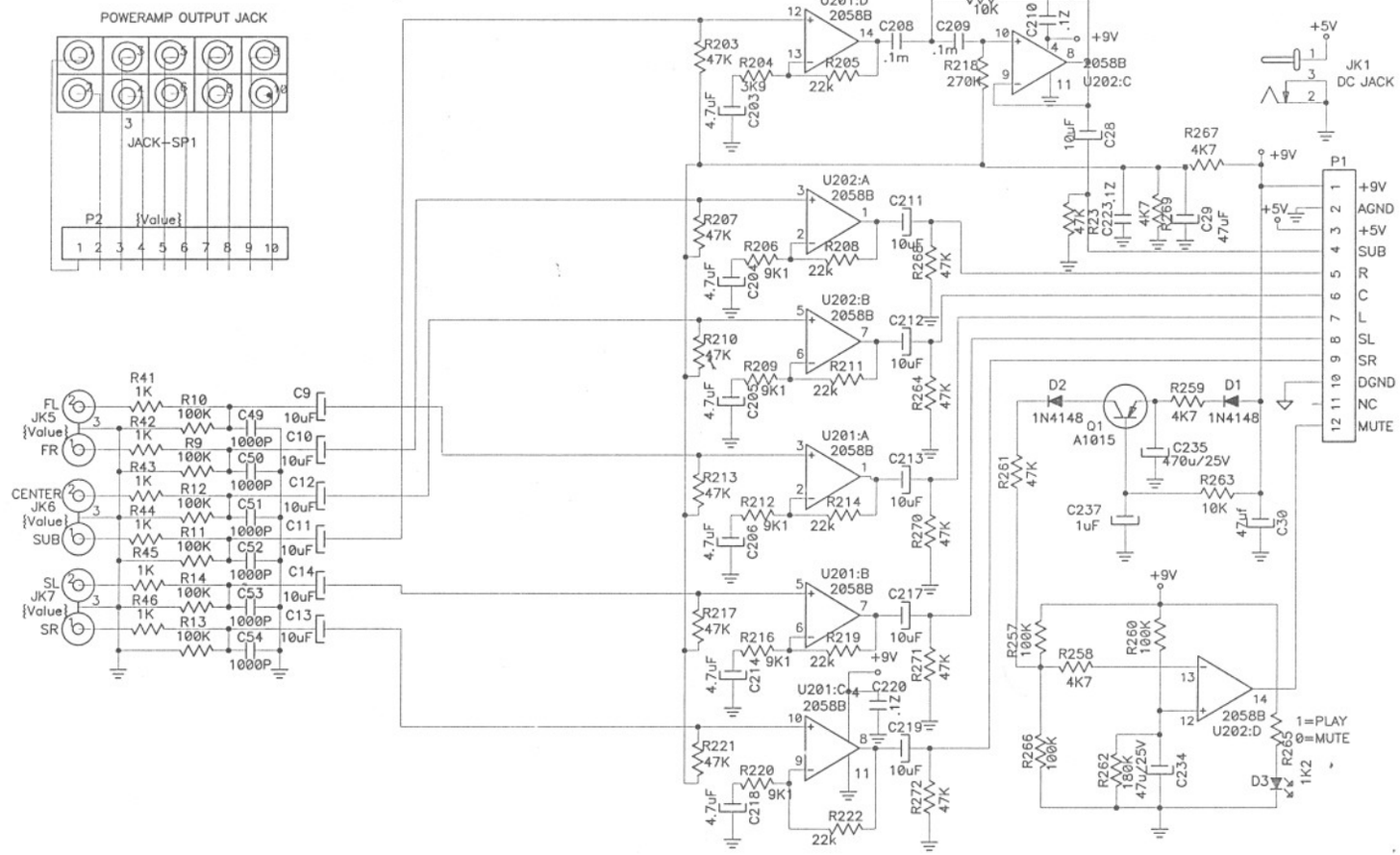

	Draw.		Dsgn.		Apvd.		

Filename	Rev	Size A3
Model No.	1	
Drawn by	2	
Date	3	