AW 96 Series Installation & Maintenance Manual

Version # 1.5

June 2006

Prepared By
AirWalk Communications, Inc.
1830 North Greenville Ave
Richardson, TX, 75081
Phone: (972) 638-9400
Fax: (972) 638-9401
www.airwalkcom.com

FOR USE BY TRAINED TECHNICIANS ONLY

Revision History

Version	Date	Person	Description
0.1	03/01/2004	WC/JMH	Draft Document (source AW 2100)
0.2	8/17/2004	CMO	Corrected drawings/specifications
0.3	8/17/2004	CMO	Revised for ETL compliance, Labeling
1.0	8/20/2004	CMO	Released
1.1	1/5/2005	CMO	Updated Omni Model Chart
1.2	3/15/2005	CMO	Added Sector RU
1.3	11/4/2005	CMO	Revised Sector RU diagrams
1.4	4/30/2006	CMO	Added MicoCell/PicoCell Cabling section
1.5	6/14/2006	CMO	Added regulatory compliance information

Revision Numbering Key

0.x	Work in Progress
1.0	Initial Document Approval
1.x	Revisions Following Initial Document Approval
2.0	Revisions Approval

Table of Contents

TABLE OF CONTENTS **3**

1 INTRODUCTION **6**

1.1 PROPRIETARY INFORMATION NOTICE 6
1.2 PURPOSE OF DOCUMENT 6
1.3 SCOPE 6
1.4 ORDER OF PRECEDENCE 6
1.5 TERMINOLOGY 6
1.6 APPLICABLE DOCUMENTS 6
1.6.1 AirWalk Documents *6*
1.6.2 Telecom Standards *7*
1.6.3 Other Documents *7*

2 AW 96 SERIES MODEL STRUCTURE **8**

2.1 AW 96 1900 MHZ CONFIGURATIONS (PCS BAND) 8
2.2 AW 96 800 MHZ CONFIGURATIONS 9
2.3 AW 96 450 MHZ (NMT BAND) CONFIGURATIONS 10

3 AW 96 SAFETY AND COMPLIANCE INFORMATION **11**

3.1 STATEMENT OF INTENT 11
3.2 SAFETY PRECAUTIONS 11
3.3 MAINTENANCE INFORMATION 12
3.3.1 Cleaning *12*
3.3.2 Filter Maintenance *12*
3.3.3 Fuse Replacement *12*
3.3.4 Other Maintenance *12*
3.4 LABELING 13
3.4.1 Grounding *13*
3.4.2 Label: Model Identification, FCC Identification, Power *13*
3.5 REGULATORY COMPLIANCE INFORMATION 14
3.5.1 Radio Interference (FCC 15.19 Statement) *14*
3.5.2 Unauthorized Modifications (FCC 15.21 Statement) *14*
3.5.3 Digital Device Interference (FCC 15.105 Statement) *14*
3.5.4 RF Exposure (FCC MPC Compliance) *14*

4 AW 96 SYSTEM INTRODUCTION **15**

4.1 OVERVIEW 15
4.2 IP- BASE STATION (BS) SYSTEM DESCRIPTION 15
4.3 HARDWARE CONFIGURATION 16
4.3.1 Physical Description *16*
4.3.2 Typical Configurations *17*
4.3.3 Installation Photographs *17*
4.4 BLOCK DIAGRAM – AW 96 19
4.5 SYSTEM CAPACITIES AND SPECIFICATIONS 20
4.5.1 AW 96 Technical Specification *20*
4.5.2 Integrated Omni RU (Remote RF Unit) Technical Specification *21*
4.5.3 Sector RU (Remote RF Unit) Technical Specification *22*
4.5.4 IP-BS Power Supply & Environment Technical Specification *23*

5 AW 96 COMPONENTS 24

5.1 AW-96 MAIN UNIT 24
5.2 INTEGRAL OMNI RU (REMOTE RF UNIT) [OMNI CONFIGURATIONS] 25
5.3 SECTOR RU (REMOTE RF UNIT) [SECTOR CONFIGURATIONS] 26
5.4 COMPONENT LED CONFIGURATION 29
5.4.1 CDPB (Common Digital Processing Block) 29
XCVB 30
5.4.2 Sector RU Power Supply Unit (PSU) [AC powered models only] 31

6 AW 96 INTEGRATED OMNI RU INTERFACE CABLING 32

6.1 RF CABLING – INTEGRATED RU OMNI CONFIGURATION 32
6.2 ELECTRIC POWER CABLE WIRING 33
6.3 ETHERNET CABLE WIRING 34
6.4 GPS ANTENNA CABLE WIRING 34
6.5 PHOTOGRAPH OF TYPICAL CABLE WIRING 35

7 AW 96 SECTOR RU INTERFACE CABLING 36

7.1 RF CABLING – SECTOR RU CONFIGURATION (3 SECTOR) 36
7.2 RU POWER SUPPLY INTERCONNECT WIRING 37
7.3 ETHERNET/SERIAL CABLE WIRING 37
7.4 ELECTRIC POWER CABLE WIRING 38
7.5 GPS ANTENNA CABLE WIRING 39
7.6 PHOTOGRAPH OF TYPICAL CABLE WIRING 40

8 AW 96 LOW POWER (PICOCELL/MICROCELL) CABLING 41

9 FREQUENCY SETTING PROCEDURES 42

9.1 BSM MANAGEMENT 42
9.2 LOCAL FA SETTING 42
9.2.1 MMI Connection 42
9.2.2 FA Change Procedure 43

10 INSTALLATION PROCEDURES 46

10.1 INSTALLATION VERIFICATION 46
10.1.1 Verify Customer Contact & Equipment location 46
10.1.2 Uncrate and arrange for packing material disposal 47
10.1.3 Verify location of all Facility distribution points (main and intermediate) 47
10.2 AW-SERIES IP-RAN INSTALL PROCEDURES 48
10.2.1 Install AW-SERIES IP-RAN Cabinet 48
10.2.2 Verify All Internal System Connections 48
10.2.3 External System Connections 49
10.2.4 Connect Power to Cabinet 49
10.2.5 Connect Communications Facilities 49
10.2.6 Power-up procedure 50
10.3 SYSTEM TEST 50
10.3.1 PC to AW 96 cable 50
10.3.2 System Certification Tests 51
10.3.3 Operation Tests 56
10.3.4 Operator Specific Tests 57
10.4 SITE CLEAN UP AND CUSTOMER SIGNOFF 57
10.4.1 Dispose of all packing material 57

10.4.2 Clean-up site. *57*
10.4.3 Update Installation Checklist. *57*
10.4.4 Customer Signoff. *57*
10.5 REQUIRED TOOLS AND SUPPLIES 57
10.6 TROUBLESHOOTING PROCEDURES 58
10.6.1 Before Calling for Assistance *58*
10.6.2 When Calling for Assistance *59*

11 APPENDIX A - ACRONYMS 60

12 APPENDIX B - SITE PREPARATION CHECKLIST 65

13 APPENDIX C - INSTALLATION CHECKLIST 68

14 APPENDIX D - CUSTOMER CERTIFICATION DOCUMENT 71

1 INTRODUCTION

1.1 Proprietary Information Notice

THIS DOCUMENT IS THE PROPERTY OF AIRWALK COMMUNICATIONS, INC. THE RECIPIENT MAY USE IT ONLY FOR THE PURPOSE FOR WHICH IT WAS TRANSMITTED AND WILL BE RETURNED UPON REQUEST OR WHEN NO LONGER NEEDED BY RECIPIENT. IT MAY NOT BE COPIED OR COMMUNICATED WITHOUT THE WRITTEN CONSENT OF AIRWALK COMMUNICATIONS, INC.

1.2 Purpose of Document

The purpose of this document is to define the Installation, Maintenance and Safety Compliance of AirWalk Communication's, Inc. unique CDMA Radio Access Network (RAN) system. The AirWalk RAN is a market ready, standards compliant, high channel capacity, cost effective, modular and expandable wireless radio access network system. Designed specifically for CDMA2000 networks, the Base Station Transceiver (BTS) and Base Station Controller (BSC) are integrated into a single compact platform.

The target market and applications are in-building areas, corporations, corporate campuses, enterprises, university campuses, large industrial plants, stadiums, airports, shopping malls, blind spots, hot spots, rural areas, neighborhoods, and highways.

1.3 Scope

The scope of this document covers the description, environmental specifications, equipment location, cabling, system installation and maintenance of the AirWalk RAN. Specific models covered are identified in the section entitled "Model Information".

1.4 Order of Precedence

This System Installation Manual will take precedence over any previous AirWalk System Installation Manual or Document.

1.5 Terminology

See the section entitled: Appendix A - Acronyms

1.6 APPLICABLE DOCUMENTS

The following documents are applicable to the extent specified in this System Installation Manual.

1.6.1 AirWalk Documents

- IP- Base Station (BS) System Description.
- IP- Base Station (BS) CPIB Block Diagram.
- IP- Base Station (BS) GPSR Block Diagram.
- IP- Base Station (BS) PCPM Block Diagram.
- IP- Base Station (BS) XCVB Block Diagram.
- AirWalk System Specification-11-13-2003-v1.0.

- System User Manual_022404.
- System Installation Manual_030104.

1.6.2 Telecom Standards

- TIA/EIA/IS-2000 Series Revision: C - Introduction to CDMA2000 Spread Spectrum Systems, 05/00/02
- Personal Station – Base Station Compatibility Requirements for1.8 to 2.0 GHz CDMA PCS.
- TIA/EIA-664 - Wireless Features Description, 12/00/00
- TIA/EIA Interim Standard 95 Revision A - Mobile Station –Base Station Compatibility Standard for Dual-Mode Wideband Spread Spectrum Cellular Systems, May 1995
- TIA/EIA-95-B - Mobile Station-Base Station Compatibility Standard for Dual-Mode Spread Spectrum Systems, October 31, 1998
- MSC to BS Interface Inter-Operability Specification (IOS) IOS-4.2
- IMT-2000 Specification, (indoor wireless propagation)

1.6.3 Other Documents

None Identified

2 AW 96 Series Model Structure

2.1 AW 96 1900 MHz Configurations (PCS Band)

This model chart covers all 1900 MHz (PCS band) configuration models. Not all models are available in all markets. Clarify any model structure questions with Technical Support Services or your Sales representative.

High Level Model Structure Chart
(AW-96 Series 1900 MHz Band Configurations)

Group	Assembly Part Number	Name	Descripion	AW96R19AA1A01	AW96R19AB7A01	AW96R19AF7A01	AW96R19AJ7A01	AW96R1DAJ7A01	AW96R19AB3A01	AW96R19AJ3A01	AW96C19AJ3A01	AW96R1DAJ3A01	AW96C1DAJ3A01	AW10R19AF1A01
CDPB Assy	SUB0031	CDPB	CPIB & PCPM 96 CE		1	1	1	1	1	1	1	1	1	(Alt)
	SUB00xx	CDPB	CPIB & PCPM 32 CE (obsolete)	1										
	SUB00xx	CDPB	CPIB & PCPM PB Only											1
XCVB Assy	PBA0004	XCVB	1.9 GHz Dual Mode 1/50mW PCS	1	1	1	1	1	3	3	3	3	3	(Alt)
	PBA0003	XCVB	800 Dual Mode 1/50mW Cell Band											
	PBA0006	XCVB	450 Dual Mode 1/50mW NMT (A/H)											
	SUB0004	XCVB	2100 MHz 1mW (Japan Band)											
	SUB00xx	XCVB	1800 MHz 1mW (Korea Band)											
	SUB00xx	XCVB	1.9 GHz xmit ONLY (PB)											1
	SUB00xx	XCVB	800 MHz Xmit ONLY (PB)											
RCPB Assy	SUB00xx	RCPB	5.0 Watt Internal PA Module 1.9 MHz			1								1
	SUB00xx	RCPB	5.0 Watt Internal PA Module 800 MHz											
FEDB	SUB00xx	FEDB	MiniCell Internal Duplexer 1.9 GHz			1								
	SUB00xx	FEDB	MiniCell Internal Duplexer 800 MHz											
Chassis Assy	SUB00xx	Chassis	AW-96 Chassis - Onmi Internal PA			1								
	SUB00xx	Chassis	AW-96 Chassis - Onmi/1S	1	1		1	1						
	SUB00xx	Chassis	AW-96 Chassis - 2 Sector											
	SUB00xx	Chassis	AW-96 Chassis - 3 sector						1	1	1	1	1	
	SUB00xx	Chassis	AW-10 Chassis - Pilot Beacon											1
Ext Cable Kits	CBK0005	Ext Cable	External Cable Kit - Omni RU				1	1						
	CBK0006	Ext Cable	External Cable Kit - Sector RU - S1							1	1	1	1	
	CBK0007	Ext Cable	External Cable Kit - Sector RU - S2							1	1	1	1	
	CBK0008	Ext Cable	External Cable Kit - Sector RU - S3							1	1	1	1	
Cord	SUB00xx	Pwr Cord	Power Cord UL 16 Guage	1	1	1	1	1	1	1	1	1	1	1
RU Assy	SUB00xx	RU	Omni System - 1900 Band C/F				1							
	SUB00xx	RU	Omni System - 1900 Band A/B/D/E					1						
	SUB0028	RU	Omni System - 800											
	SUB00xx	RU	Omni System - 450 NMT A Sub Band											
	SUB00xx	RU	Sector System - 1900 Band C/F							1	1			
	SUB00xx	RU	Sector System - 1900 Band A/B/D/E									1	1	
	SUB0029	RU	Sector System - 800											
	SUB00xx	RU	Sector System - 450 NMT A Sub Bnd											
	SUB00xx	RU	Sector System - 2100 Japan											
Mount Assy	SUB00xx	Cabinet	AW Cabinet Package 19" Short								1		1	

2.2 AW 96 800 MHz Configurations

This model chart covers all 800 MHz (conventional Cellular band) configuration models. Not all models are available in all markets. Clarify any model structure questions with Technical Support Services or your Sales representative.

High Level Model Structure Chart
(AW-96 Series 800 MHz Band Configurations)

Group	Assembly Part Number	Name	Descripion	AW96R80AA1A01	AW96R80AB7A01	AW96R80AF7A01	AW96R80AJ7A01	AW96R80AB3A01	AW96R80AJ3A01	AW96C80AJ3A01	AW10R80AF1A01				
CDPB Assy	SUB0031	CDPB	CPIB & PCPM 96 CE		1	1	1	1	1	1	(Alt)				
	SUB00xx	CDPB	CPIB & PCPM 32 CE (obsolete)	1											
	SUB00xx	CDPB	CPIB & PCPM PB Only								1				
XCVB Assy	PBA0004	XCVB	1.9 GHz Dual Mode 1/50mW PCS												
	PBA0003	XCVB	800 Dual Mode 1/50mW Cell Band	1	1	1	1	3	3	3	(Alt)				
	PBA0006	XCVB	450 Dual Mode 1/50mW NMT (A/H)												
		XCVB													
	SUB0004	XCVB	2100 MHz 1mW (Japan Band)												
	SUB00xx	XCVB	1800 MHz 1mW (Korea Band)												
	SUB00xx	XCVB	1.9 GHz xmit ONLY (PB)												
	SUB00xx	XCVB	800 MHz Xmit ONLY (PB)								1				
RCPB Assy	SUB00xx	RCPB	5.0 Watt Internal PA Module 1.9 GHz												
	SUB00xx	RCPB	5.0 Watt Internal PA Module 800 GHz			1					1				
FEDB	SUB00xx	FEDB	MiniCell Internal Duplexer 1.9 GHz												
	SUB00xx	FEDB	MiniCell Internal Duplexer 800 MHz			1									
Chassis Assy	SUB00xx	Chassis	AW-96 Chassis - Onmi Internal PA			1									
	SUB00xx	Chassis	AW-96 Chassis - Onmi/1S	1	1		1								
	SUB00xx	Chassis	AW-96 Chassis - 2 Sector												
	SUB00xx	Chassis	AW-96 Chassis - 3 sector					1	1	1					
	SUB00xx	Chassis	AW-10 Chassis - Pilot Beacon								1				
Ext Cable Kits	CBK0005	Ext Cable	External Cable Kit - Omni RU				1								
	CBK0006	Ext Cable	External Cable Kit - Sector RU - S1						1	1					
	CBK0007	Ext Cable	External Cable Kit - Sector RU - S2						1	1					
	CBK0008	Ext Cable	External Cable Kit - Sector RU - S3						1	1					
Cord	SUB00xx	Pwr Cord	Power Cord UL 16 Guage	1	1	1	1	1	1	1	1				
RU Assy	SUB00xx	RU	Omni System - 1900 Band C/F												
	SUB00xx	RU	Omni System - 1900 Band A/B/D/E												
	SUB0028	RU	Omni System - 800				1								
	SUB00xx	RU	Omni System - 450 NMT A Sub-Band												
	SUB00xx	RU	Sector System - 1900 Band C/F												
	SUB00xx	RU	Sector System - 1900 Band A/B/D/E												
	SUB0029	RU	Sector System - 800						1	1					
	SUB00xx	RU	Sector System - 450 NMT A Sub Bnd												
	SUB00xx	RU	Sector System - 2100 Japan												
Mount Assy	SUB00xx	Cabinet	AW Cabinet Package 19" Short							1					

2.3 AW 96 450 MHz (NMT Band) Configurations

This model chart covers 450 MHz (former NMT Nordic Mobile Telephone band) configuration models. Not all models are available in all markets. Clarify any model structure questions with Technical Support Services or your Sales representative.

High Level Model Structure Chart
(AW-96 Series 450 MHz Band Configurations)

Group	Assembly Part Number	Name	Descripion	AW96R45AA1A01	AW96R45AB7A01	AW96R45AF7A01	AW96R45AJ7A01	AW96R45AB3A01	AW96R45AJ3A01	AW96C45AJ3A01					
CDPB Assy	SUB0031	CDPB	CPIB & PCPM 96 CE		1	1	1	1	1	1					
	SUB00xx	CDPB	CPIB & PCPM 32 CE (obsolete)	1											
	SUB00xx	CDPB	CPIB & PCPM PB Only												
XCVB Assy	PBA0004	XCVB	1.9 GHz Dual Mode 1/50mW PCS												
	PBA0003	XCVB	800 Dual Mode 1/50mW Cell Band												
	PBA0006	XCVB	450 Dual Mode 1/50mW NMT (A/H)	1	1	1	1	3	3	3					
	SUB0004	XCVB	2100 MHz 1mW (Japan Band)												
	SUB00xx	XCVB	1800 MHz 1mW (Korea Band)												
	SUB00xx	XCVB	1.9 GHz xmit ONLY (PB)												
	SUB00xx	XCVB	800 MHz Xmit ONLY (PB)												
RCPB Assy	SUB00xx	RCPB	5.0 Watt Internal PA Module 1.9 GHz												
	SUB00xx	RCPB	5.0 Watt Internal PA Module 800 GHz												
FEDB	SUB00xx	FEDB	MiniCell Internal Duplexer 1.9 GHz												
	SUB00xx	FEDB	MiniCell Internal Duplexer 800 MHz												
Chassis Assy	SUB00xx	Chassis	AW-96 Chassis - Onmi Internal PA			1									
	SUB00xx	Chassis	AW-96 Chassis - Onmi/1S	1	1		1								
	SUB00xx	Chassis	AW-96 Chassis - 2 Sector												
	SUB00xx	Chassis	AW-96 Chassis - 3 sector					1	1	1					
	SUB00xx	Chassis	AW-10 Chassis - Pilot Beacon												
Ext Cable Kits	CBK0005	Ext Cable	External Cable Kit - Omni RU				1								
	CBK0006	Ext Cable	External Cable Kit - Sector RU - S1						1	1					
	CBK0007	Ext Cable	External Cable Kit - Sector RU - S2						1	1					
	CBK0008	Ext Cable	External Cable Kit - Sector RU - S3						1	1					
Cord	SUB00xx	Pwr Cord	Power Cord UL 16 Guage	1	1	1	1	1	1	1					
RU Assy	SUB00xx	RU	Omni System - 1900 Band C/F												
	SUB00xx	RU	Omni System - 1900 Band A/B/D/E												
	SUB0028	RU	Omni System - 800												
	SUB00xx	RU	Omni System - 450 NMT A Sub-Band				1								
	SUB00xx	RU	Sector System - 1900 Band C/F												
	SUB00xx	RU	Sector System - 1900 Band A/B/D/E												
	SUB0029	RU	Sector System - 800												
	SUB00xx	RU	Sector System - 450 NMT A Sub Bnd						1	1					
	SUB00xx	RU	Sector System - 2100 Japan												
Mount Assy	SUB00xx	Cabinet	AW Cabinet Package 19" Short							1					

3 AW 96 Safety And Compliance Information

3.1 Statement Of Intent

The AirWalk AW 96 RAN is intended for use in a CDMA cellular infrastructure radio access network. The responsible body shall be made aware that, if the equipment is used in a manner not specified by the manufacturer, the protection provided by the equipment may be impaired.

3.2 Safety Precautions

1) Power Sources

Use only power sources that are within the specified limits as designated on the equipment labels. Use of power sources outside the specified limits is hazardous and may cause personal injury or property damage.

2) Equipment Location

Equipment should be located indoors or in a suitable protected environment such as an equipment enclosure. Use of unprotected equipment outdoors is hazardous and may cause personal injury or property damage.

3) Grounding And Electrical Connections

Electrical connections including equipment grounding should be made in accordance with the National Electric Code and any local regulations. Improper electrical connections are hazardous and may cause personal injury or property damage. Consult a licensed electrical installer if in doubt.

4) Hazardous Voltages

Equipment may contain hazardous voltages. Only qualified service personnel should open the equipment for adjustments, repairs or replacements.

5) Replacement Parts

Damaged parts and protective devices such as fuses should only be replaced by components approved or recommended by AirWalk Communications. Replacement fuses must be of the same rating and type as the original for continued protection.

3.3 Maintenance Information

3.3.1 Cleaning

The AirWalk AW 96 units are protected by a high performance paint which does not require normal maintenance. If paintwork is soiled, it can be cleaned using a damp cloth after AC power has been disconnected. Do not use liquids or spray cleaning substances on the unit since property damage or personal injury may result.

3.3.2 Filter Maintenance

The AW 96 Main Unit is equipped with a washable air filter located in a front mounted drop down door.

This filter should be checked annually for dirt build-up and cleaned if required. Note more frequent inspections may be needed in dusty environments.

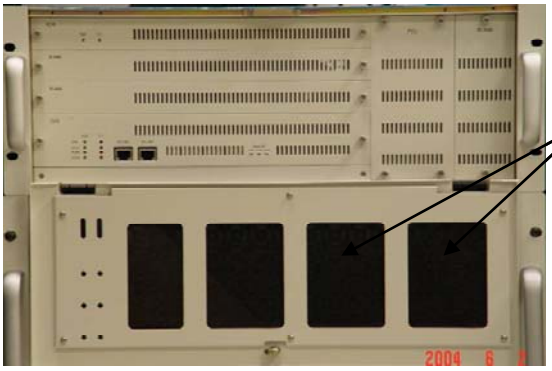

3.3.3 Fuse Replacement

The AW 96 Main Unit contains a 250 V 5A fuse located behind the AC connector cap as shown in the diagram. Replace the fuse with the same type and ratings.

3.3.4 Other Maintenance

Any other required maintenance must be performed by suitable trained service personnel. Do not open covers or attempt to repair unit if not suitably trained.

3.4 Labeling

3.4.1 Grounding

Proper grounding is recommended to ensure good RF performance in addition to personnel safety. Antenna systems should also be suitably grounded for good RF performance.

Grounding connection points on the chassis are identified by this symbol:

3.4.2 Label: Model Identification, FCC Identification, Power

The following label is applied to the AW 96 unit to provide model identification, FCC identification and rated power supply information.

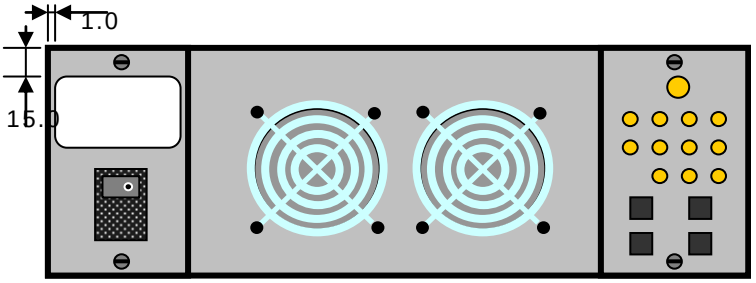

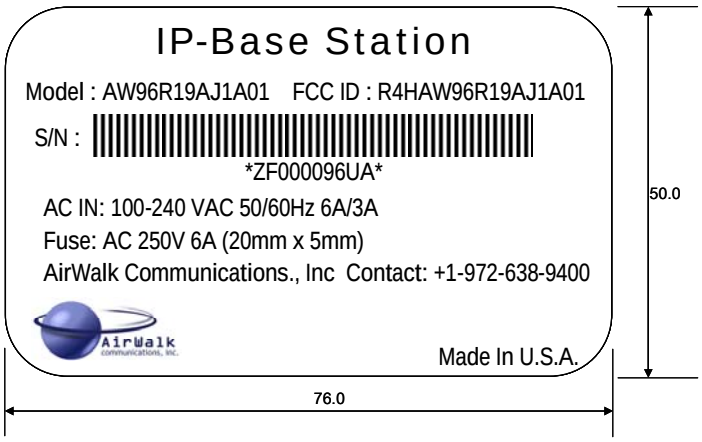

3.5 Regulatory Compliance Information

The FCC regulatory compliance information provided in this section is applicable only to models equipped with an FCC identification number (FCC ID).

3.5.1 Radio Interference (FCC 15.19 Statement)

This device complies with part 15 of the FCC Rules. Operation is subject to the following two conditions: (1) This device may not cause harmful interference, and (2) this device must accept any interference received, including interference that may cause undesired operation.

3.5.2 Unauthorized Modifications (FCC 15.21 Statement)

Persons or parties responsible for operation of this equipment are cautioned that any changes or modifications not expressly approved by AirWalk Communications Incorporated could void the user's authority to operate this equipment.

3.5.3 Digital Device Interference (FCC 15.105 Statement)

This equipment has been tested and found to comply with the limits for a Class B digital device, pursuant to part 15 of the FCC Rules. These limits are designed to provide reasonable protection against harmful interference in a residential installation. This equipment generates, uses, and can radiate radio frequency energy and, if not installed and used in accordance with the instructions, may cause harmful interference to radio communications.

3.5.4 RF Exposure (FCC MPC Compliance)

In order to comply with FCC RF Exposure requirements, this device must be installed and operated in such a way that a minimum separation distance of 20 cm is always maintained between the antenna and all persons during normal operations.

4 AW 96 System Introduction

4.1 Overview

The AirWalk AW 96 (CDMA-2000 IP-Base Station) product is unique in the way that it combines both BTS and BSC functionality in one compact platform.

This product is designed for efficiency and optimized to reduce the service providers CAPEX, and OPEX and at the same time, it increases the number of users per assigned spectrum.

It provides higher capacity in less space for today's spectrum hungry data and multi-media applications.

The AW 96 system provides the following advantages:

- Easily adapted to 3FA/Omni structure.
- Supports 2G (TIA/EIA-95, J-STD-008) and 3G-1X (CDMA2000) standards
- Supports data service transmission of 1.2 kbps to 144 kbps
- Provides 96 basic channel elements.
- Easy repair and support
- Improved reliance
- Provides an 'All-IP' solution
- Provides an effective solution for enterprise networks and hot spots.

4.2 IP- Base Station (BS) System Description

The AW 96 IP-RAN (Internet Protocol Radio Access Network) is composed of two main modules: The IP based BSC and the IP based BTS. When an AirWalk IP-RAN is installed in an 'ALL-IP' network the integrated BTS is controlled by the integrated BSC, and the integrated BSC is controlled by a SS (Soft Switch). Legacy Switching Systems can also control the integrated BSC through standards based interfaces.

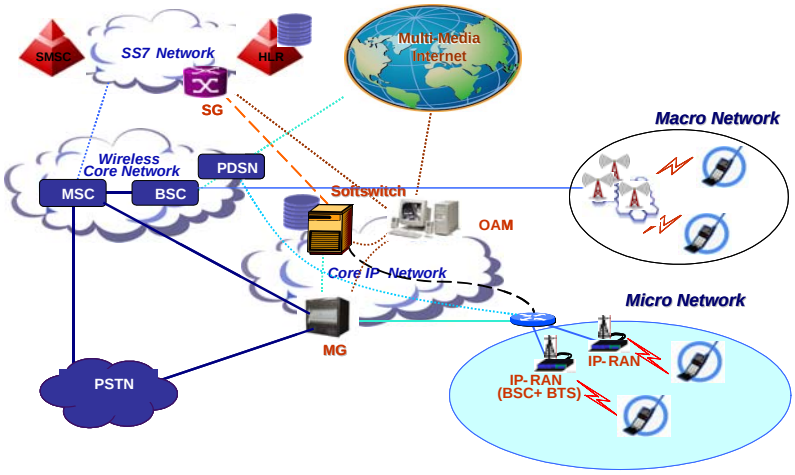

Figure 4-1 Network Diagram

4.3 Hardware Configuration

The IP-BS is a unique modular and stackable combination BSC and BTS platform that is differentiated from other systems. Other systems have separate BTS and BSC platforms which adds to cost and complexity. The AirWalk RAN has a structure that combines and arranges the BSC interface with one 1FA/3Sector BTS in a single package.

The main components are (depending on specific model):

- AW-96 (Main Unit)
  - CDPB (Common Digital Processing Board), consisting of:
    - CPIB (Channel Processor and IF Interface Board)
    - PCPM (Primary Call Processor Module)
    - GPSR (Global Positioning System Receiver)
  - XCVB (RF Transceiver Board)
  - PSA (Power Supply Assembly)
- RU (Remote RF Unit) [3 Sector RU]
  - HPAU (High Power Amplifier Unit)
  - AFEU (Antenna Front End Unit)
  - FANU (Fan Unit)
  - RPSU (Remote RF Power Supply Unit) [Separate assembly]
- Integral Omni RU (Remote RF Unit)
  - Unified HPAU, AFEU, RPSU in single unit
- Optional Cabinet Mounting
  - Some units may be mounted in an optional cabinet

4.3.1 Physical Description

- Main Unit
  - Dimension: Max. 482mm(W) x 457mm(D) x 178mm(H)
  - 19” EIA Rack x 4 Rack Units
  - Weight: 18 kg (3 Sector); 15 kg (Omni)
- Sector RU [3 Sector RU] (less power supply)
  - Dimension: Max. 482mm(W) x 362mm(D) x 355mm(H)
  - 19” EIA Rack x 8 Rack Units
  - Weight: 39 kg
- Sector RU RPSU (AC Power Supply)
  - Dimension: Max. 482mm(W) x 446mm(D) x 89mm(H)
  - 19” EIA Rack x 2 Rack Units
  - Weight: 9 kg
- Integrated Omni RU
  - Dimension: Max. 482mm(W) x 410mm(D) x 178mm(H)
  - 19” EIA Rack x 4 Rack Units
  - Weight: 22 kg
- Optional Self-Contained Mounting Cabinet (including casters)
  - Dimension: Max. 546mm(W) x 610mm(D) x 876mm(H)
  - 19” EIA Rack x 16 Rack Units mounting space
  - *Refer to Optional Cabinet Installation Manual*

4.3.2 Typical Configurations

The following shows typical component configurations for common applications. Refer to the model charts for the contents of specific model numbers.

Omni low/medium power systems including MicroCell & MiniCell (1mW/50mW/4W)
- AW 96 Main Unit

Omni Pilot Beacon MacroCell Systems (4W)
- AW 96 Main Unit

Omni High Power MacroCell Systems (20W)
- AW 96 Main Unit
- Integrated Omni RU

Sector Low Power MicroCell Systems (1mW/50mW)
- AW 96 Main Unit

Sector High Power MacroCell Systems (20W)
- AW 96 Main Unit
- Sector RU
- Sector RU PSU (AC power supply)

4.3.3 Installation Photographs

The following photographs show typical field installations for AW 96 systems:

Figure 4-2 – Typical AW 96 Microcell, MiniCell & Pilot Beacon Installation

Figure 4-3 – Typical AW 96 with Omni RU (Rack Mounting)

Figure 4-4 – Typical AW 96 & 3 Sector RU (Rack Mounting)

Figure 4-5 – Typical AW 96 & 3 Sector RU with Cabinet Mounting Option

4.4 Block Diagram – AW 96

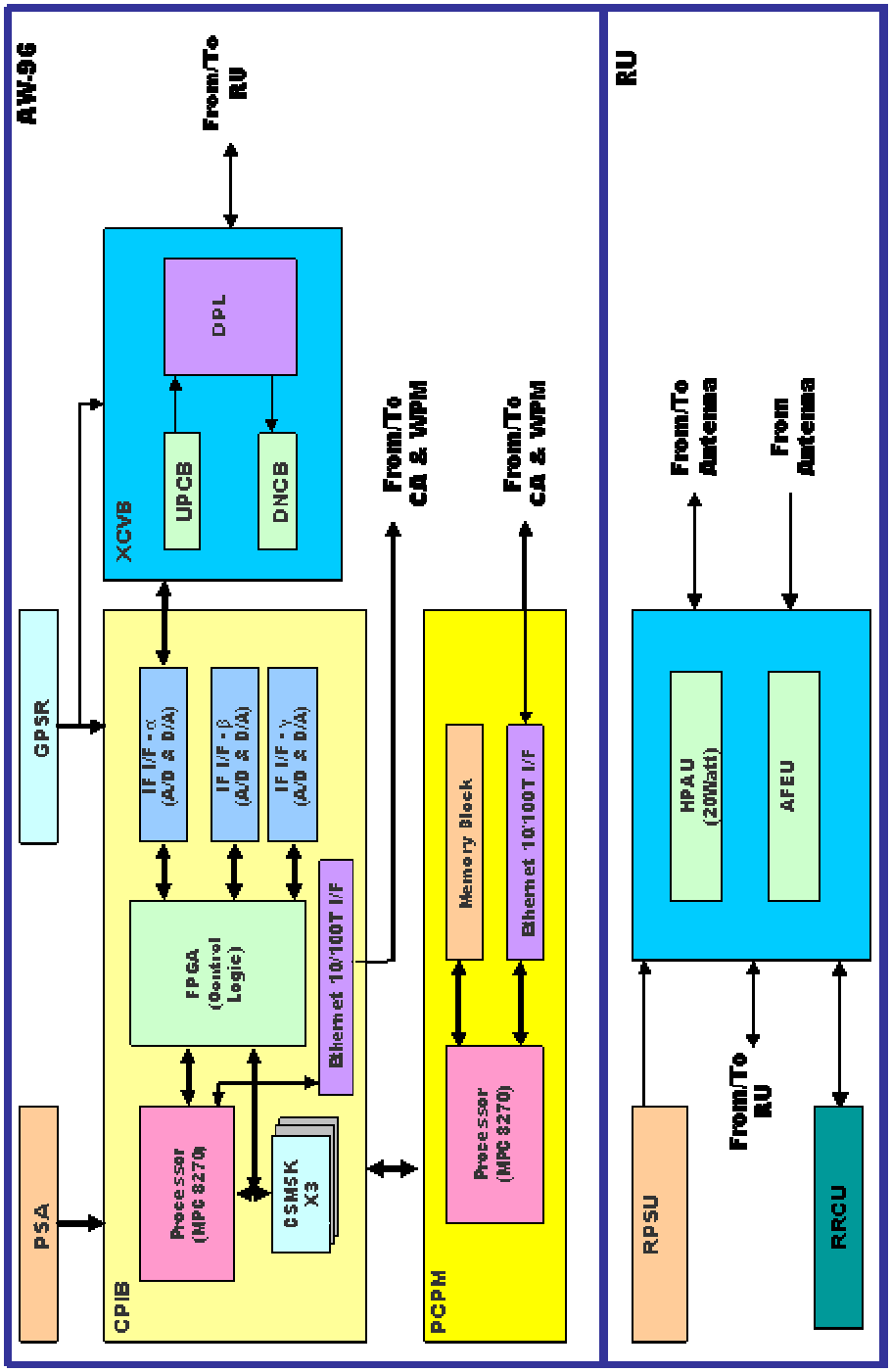

Figure 4-6 IP-BS Hardware Structure

4.5 System Capacities and Specifications

4.5.1 AW 96 Technical Specification

Item	Capacity and Specification	Remarks
Frequency Band	Up-Link: 2175 ~ 2180 MHz Down-Link: 1985 ~ 1990MHz	Japan PCS Band
	Up-Link: 1850 ~ 1910 MHz Down-Link: 1930 ~ 1990 MHz	North American PCS Band
	Up-Link: 824 ~ 849 MHz Down-Link: 869 ~ 894 MHz	800 MHz Cellular Band
	Refer To Model For Sub-Band	450 MHz NMT Band
Sector/FA	3 Sectors/FA 3FA/Omni	Each AW 96 Unit
Channel Elements / IP-BS	96CE 3FA (32 CE Omni)	IP BTS
Handoff	Softer H/O, soft H/O. Hard H/O	
Channel pooling	Sector	
GPS	External GPS Antenna	One per AW-96
Installation	Rack Mountable	4 Rack Units
Cooling	Forced Air	Front To Rear Flow
IP-Network Interface	10/100 Base-T Ethernet	
Transmitter output power	1mW/50mW/5W or 20W w/RU	Includes duplexer function
RF Interface	1 Transmit and 1 Receive A RF signal, 1 Receive B RF signal	CDMA 2000 1x
Common Air Interface (CAI)	J-STD-008/IS-95-A/IS-95B /CDMA2000-1x	
Channel bandwidth	1.25MHz	
Receiving sensitivity	Less than 1% FER, when the power is under -119dBm	
Mechanical Specification		
RF Input and Output Connector	SMA Female (Input/Output)	From/To RU
AC Power Connector	IEC	
Ethernet Signal Port Connectors	RJ-45	
Dimensions (W x H x D)	482mm(W) x 457mm(D) x 178mm(H)	4 Rack Units
Weight	18 kg (3 Sector); 15 kg (Omni)	AW 96 Main Unit

Table 4-1 – AW-96 Specifications

4.5.2 Integrated Omni RU (Remote RF Unit) Technical Specification

Tx				
Frequency		2160 ~2185 MHz		Japan PCS Band
		1850 ~1890 MHz		N American PCS (A/B/D/E)
		1890 ~ 1910 MHz		North American PCS (C/F)
		824 ~ 849 MHz		800 MHz Cellular Band
		Refer To Model For SubBand		450 MHz NMT Band
Output Power		43dBm, 20 Watt		CDMA
Gain		53 ± 1.0dB		
In/Out VSWR		1.5: 1		Output: Isolator Included
Coupling Value		23 ± 1.0dB		
Attenuation	1970 ~1995MHz	100dBc		North American PCS
Spurious Emission @43dBm(20W)_1FA		Fc±885KHz	-42dBc Min	Max Hold Marker
		Fc±1.98MHz	-52dBc Min	
		Fc±2.75MHz	-18dBm Min	RBW, VBW=30KHZ, BW=1MHz
Over Power		45 + 0.7dBm		
Over VSWR Protection		Alarm 3:1		30~43dBm
Over Temp. Protection		Alarm @ 90° ± 2°		Base Plate Temperature
Rx				
Frequency		1970 ~1995 MHz		Japan PCS Band
		1930 ~ 1990 MHz		North American PCS
		869 ~ 894 MHz		800 MHz Cellular Band
		Refer To Model For SubB		450 MHz NMT Band
Gain		24 ± 1.0dB		
Gain Flatness		1.0dB max		
In/Out VSWR		1.5: 1		
Attenuation	1970 ~1995MHz	100dBc min		North American PCS
Noise Figure		2.1dB max		
Mechanical Specification				
RF Input and Output Connector		SMA Female (Input)		N Female (Output)
AC Power Connector		IEC		
Ethernet Signal Port Connector		RJ-45		
Dimensions (W x H x D)		482mm(W) x 457mm(D) x 178mm(H))		4 Rack Units

Table 4-2 – Integrated Omni RU Specifications

4.5.3 Sector RU (Remote RF Unit) Technical Specification

Tx				
Frequency		2160 ~2185 MHz		Japan PCS Band
		1850 ~ 1890 MHz		N American PCS (A/B/D/E)
		1890 ~ 1910 MHz		N American PCS (C/F)
		824 ~ 849 MHz		800 Cellular Band
		Refer To Model For SubBand		450 MHz NMT Band
Output Power		43dBm, 20 Watt		CDMA
Gain		53 ± 1.0dB		
In/Out VSWR		1.5: 1		Output: Isolator Included
Coupling Value		23 ± 1.0dB		
Attenuation	1970 ~1995MHz	100dBc		North American PCS
Spurious Emission @43dBm(20W)_1FA		Fc±885KHz	-42dBc Min	Max Hold Marker
		Fc±1.98MHz	-52dBc Min	
		Fc±2.75MHz	-18dBm Min	RBW, VBW=30KHZ, BW=1MHz
Over Power		45 + 0.7dBm		
Over VSWR Protection		Alarm 3:1		30~43dBm
Over Temp. Protection		Alarm @ 90° ± 2°		Base Plate Temperature
Rx				
Frequency		1970 ~1995 MHz		Japan PCS Band
		1930 ~ 1990 MHz		North American PCS
		869 ~ 894 MHz		800 MHz Cellular Band
		Refer to Model For SubB		450 MHz NMT Band
Gain		24 ± 1.0dB		
Gain Flatness		1.0dB max		
In/Out VSWR		1.5: 1		
Attenuation	1970 ~1995MHz	100dBc min		North American PCS
Noise Figure		2.1dB max		
Mechanical Specification				
RF Input and Output Connector		SMA Female (Input)		N Female (Output)
AC Power Connector		IEC		
Ethernet Signal Port Connector		RJ-45		
Dimensions (W x H x D)		482mm(W) x 362mm(D) x 355mm(H)		8 Rack Units

Table 4-3 – Integrated Omni RU Specifications

4.5.4 IP-BS Power Supply & Environment Technical Specification

Input Power Supply	
Input Voltage:	AC 100Volts ~ 250Volts
Input Frequency:	50Hz ~ 60Hz
Dissipated Power	
AW-96 Main Unit:	350 Watt Max (Efficiency 75%)
Integrated Omni RU Unit	400 Watt Max (Efficiency 85%)
Sector RU Unit	1150 Watt Max (Efficiency 85%)
Maximum AW 96 IP-BS	1500 Watt Max (Main Unit & Sector RU)
Environment Specification	
Operating Temperature	0° ~ $+50^{o}$
Storage Temperature	-30° ~ $+60^{o}$
Relative Humidity	5% ~ 95% - Non-condensing
Noise	Less than 60dBA, distance 1.5m
Airborne Particle	0 ~ 90 $\mu g/m^3$

Table 4-3 - Power Supply & Environment Specifications

5 AW 96 Components

5.1 AW-96 Main Unit

Figure 5-1 AW-96 Main Unit Photo (Front View)

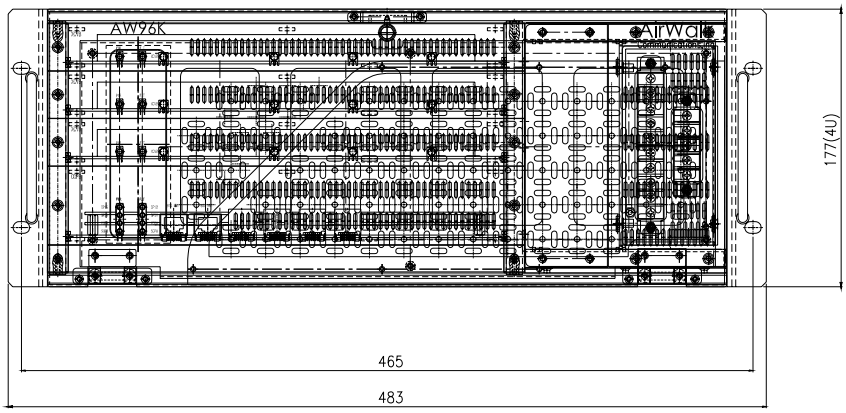

Figure 5-2 AW-96 Main Unit Line Diagram (Front View)

Figure 5-3 AW-96 Main Unit Photo (Back View)

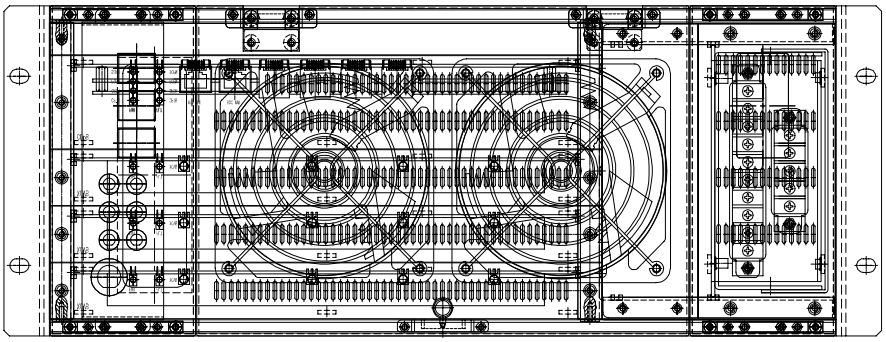

Figure 5-4 AW-96 – Line Diagram (Back View)

5.2 Integral Omni RU (Remote RF Unit) [Omni Configurations]

This is the IP-BS (Internet Protocol BTS System) RF interface system.

The main functions include a 20W power amplifier, RF filtering for Tx and Rx paths, a duplexer function for to allow connection to an antenna system, and a power supply. All components are packaged in a unified 4 rack unit package.

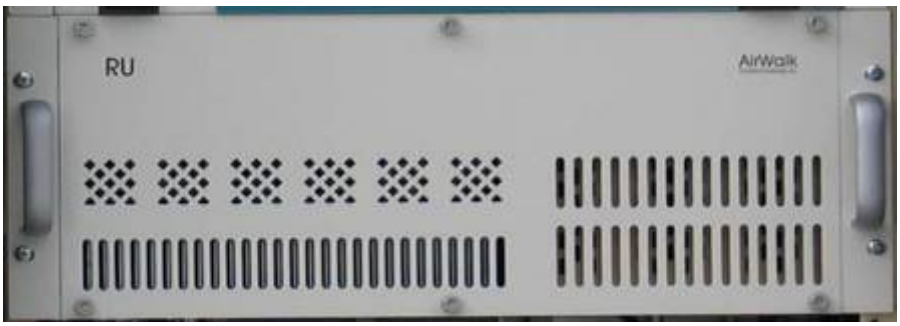

Figure 5-5 Integrated Omni RF Unit Photo (Front View)

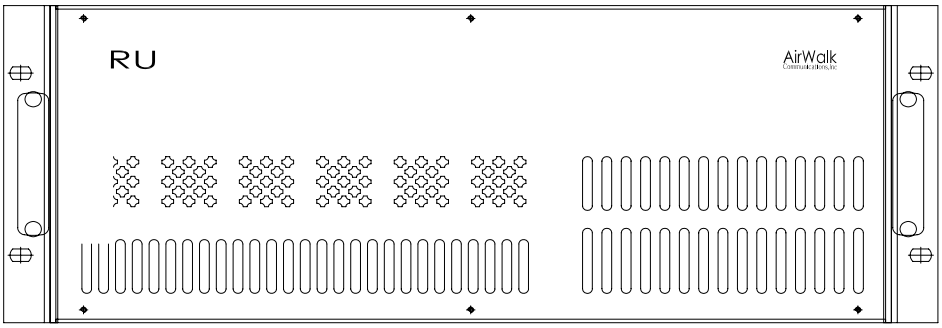

Figure 5-6 Integrated Omni RU - Line Diagram (Front View)

Figure 5-7 Integrated Omni RU (RF Unit) Photo (Rear View)

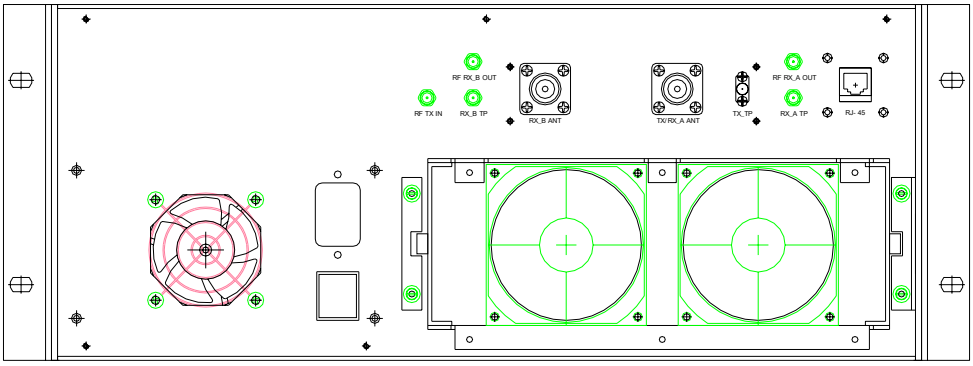

Figure 5-8 Integrated Omni RU (RF Unit) - Line Diagram (Back View)

5.3 Sector RU (Remote RF Unit) [Sector Configurations]

This is the IP-BS (Internet Protocol BTS System) sector RF Shelf. The main functions include a 20W power amplifier for each sector, RF filtering for Tx and Rx paths, a duplexer function for to allow connection to an antenna system, and a power supply.

The Sector RU system consists of a common chassis in which the following modules are installed:

- HPAU (High Power Amplifier Unit): 20 Watt power amplifier, one per sector
- AFEU (Antenna Front End Unit): Includes duplexer and LNA functions, 1/sector
- FANU (Fan Unit): Includes fans assemblies for HPAU cooling
- PSU (Power Supply Unit): A separate AC power supply for the RU system

Figure 5-9 Sector RU Photo (Front View)

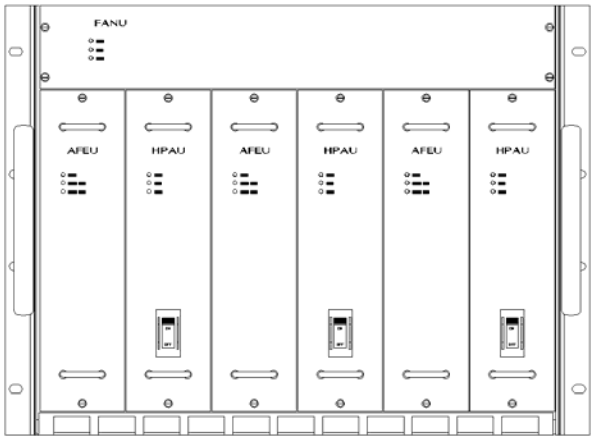

Figure 5-10 Sector RU Line Diagram (Front View)

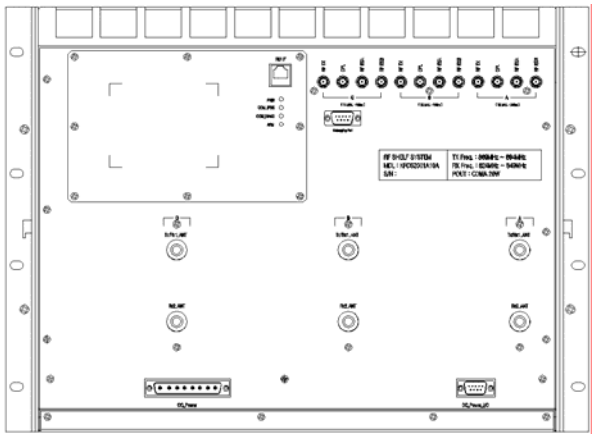

Figure 5-11 Sector RU Line Diagram (Rear View)

Each AC powered Sector RU system is also equipped with a separate Power Supply Unit which provides conditioned power for the RU system.

Figure 5-12 Sector RU PSU - Photo (Front View)

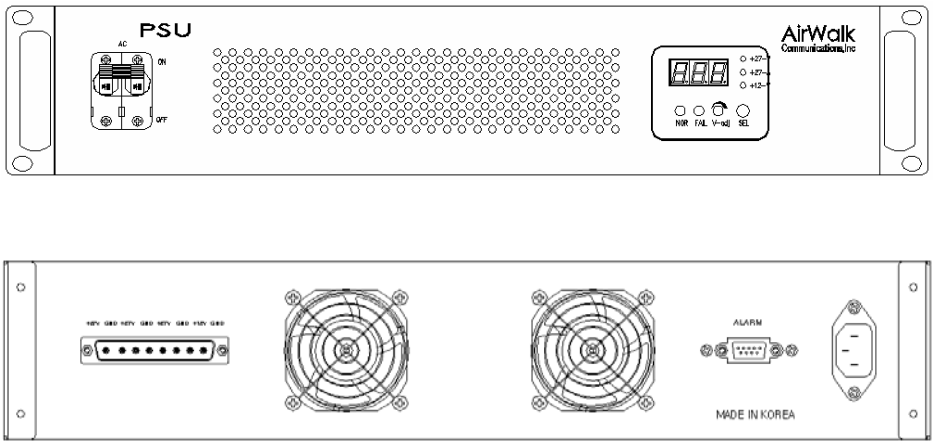

Figure 5-13 RPSU – Line Diagram (Front and Back Views)

5.4 Component LED Configuration

5.4.1 CDPB (Common Digital Processing Block)

LED status indicators are provided on the AW-96 CDPB module. LED functions are described in the following pictures and tables.

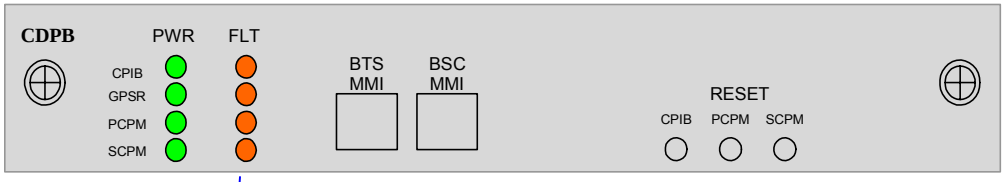

Figure 5-9 CDPB Panel Diagram

Figure 5-10 - CDPB Panel Photo

	Name	Color	On	Off	Note
1	CPIB	Green	Normal	Abnormal	CPIB power on/off indicator
2	GPSR	Green	Normal	Abnormal	GPSR power on/off indicator
3	PCPM	Green	Normal	Abnormal	PCPM power on/off indicator
4	SCPM	Green	Normal	Abnormal	SCPM power on/off indicator
5	CPIB	Orange	Abnormal	Normal	Check function of CPU in CPIB Board and ALARM
6	GPSR	Orange	Abnormal	Normal	GPSR alarm on/off indicator
7	PCPM	Orange	Abnormal	Normal	Check function of CPU in PCPM Board and ALARM
8	SCPM	Orange	Abnormal	Normal	Check function of CPU in SCPM Board and ALARM

Table 5-1 – CDPB Indicator Codes

NOTE: AW-96 models are NOT normally equipped with an SCPM (Secondary Call Processor Module), therefore these indicators are not used in most system applications.

XCVB

The XCVB module is equipped with 2 indicators. LED functions are described in the following pictures and tables.

Figure 5-11 - XCVB Panel Diagram

Figure 5-12 XCVB Panel Photo

	Name	Color	On	Off	Note
1	PWR	Green	Normal	Abnormal	XCVB power on/off indicator
2	FLT	Orange	Abnormal	Normal	XCVB alarm on/off indicator

Table 5-2 - XCVB Indicator Code Key

5.4.2 Sector RU Power Supply Unit (PSU) [AC powered models only]

The RU PSU (Power Supply Unit) is equipped with both indicators and a small numeric display. The indicator and display functions relate only to power supply operation for the RU and are described in the following pictures and tables.

Note that only AC powered models are equipped with the PSU module.

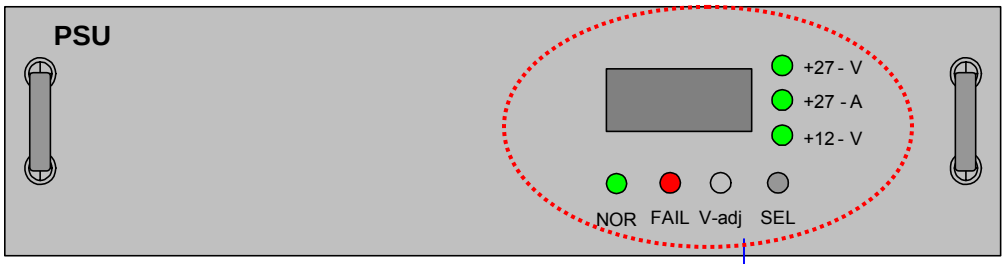

Figure 5-6 - RPSU Panel Diagram

Figure 5-7 RPSU Panel Photo

	Name	Color	On	Off	Note
1	NOR	Green	Normal	Abnormal	RPSU power normal operation indicator
2	FAIL	RED	Fail	Normal	RPSU power fail indicator
3	+27-V	Green	Select	Non-Select	+27V Voltage select by SEL push switch
4	+27-A	Green	Select	Non-Select	+27V Current select by SEL push switch
5	+12-V	Green	Select	Non-Select	+12V Voltage select by SEL push switch

Table 5-1 - RPSU Indicator Codes

6 AW 96 Integrated Omni RU Interface Cabling

6.1 RF Cabling – Integrated RU Omni Configuration

The AW 96 transmitter exciter output and diversity receiver inputs are connected to the RU which contains the duplexer, LNA and HPA functions. Connect using jumper cables as shown in Figure 6-1 (1). Use suitable cables as provided with the AW 96 system and shown in figure 6-2.

Connect external diversity antenna systems as shown in Figure 6-1 (2). External antenna connectors are “N-Type”.

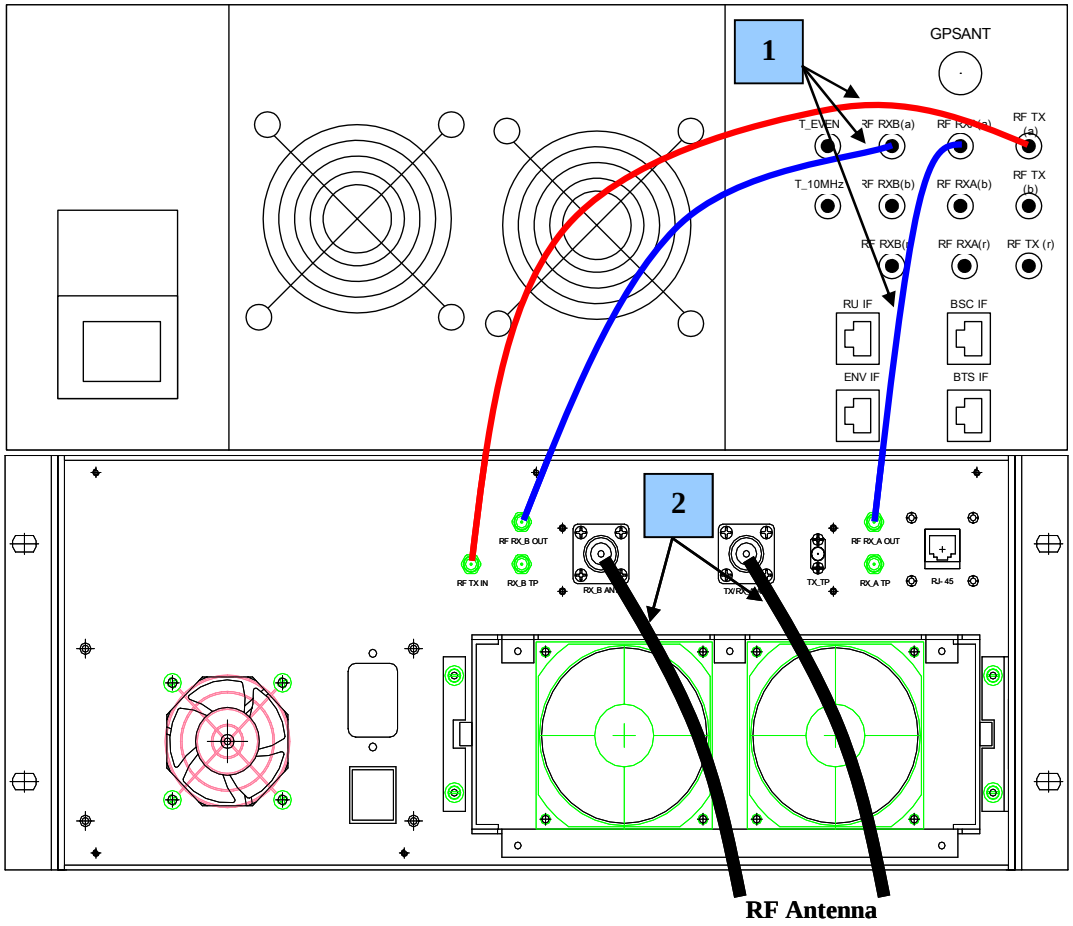

Figure 6-1 Integrated Omni RU RF Cabling Diagram

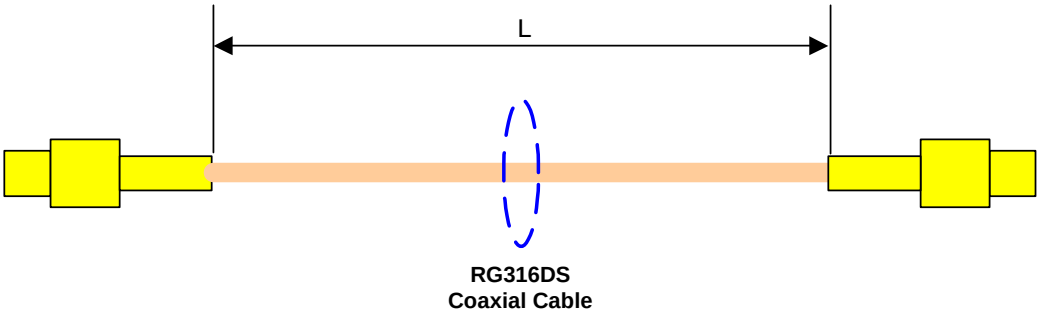

Figure 6-2 AW-96 to RU RF Cable Specification

6.2 Electric Power Cable Wiring

Connect AW-96 and Integrated Omni RU to suitable AC power sources as shown in Figure 6-3. Use only the AC power cable provided with AW 96 unit for safe operation.

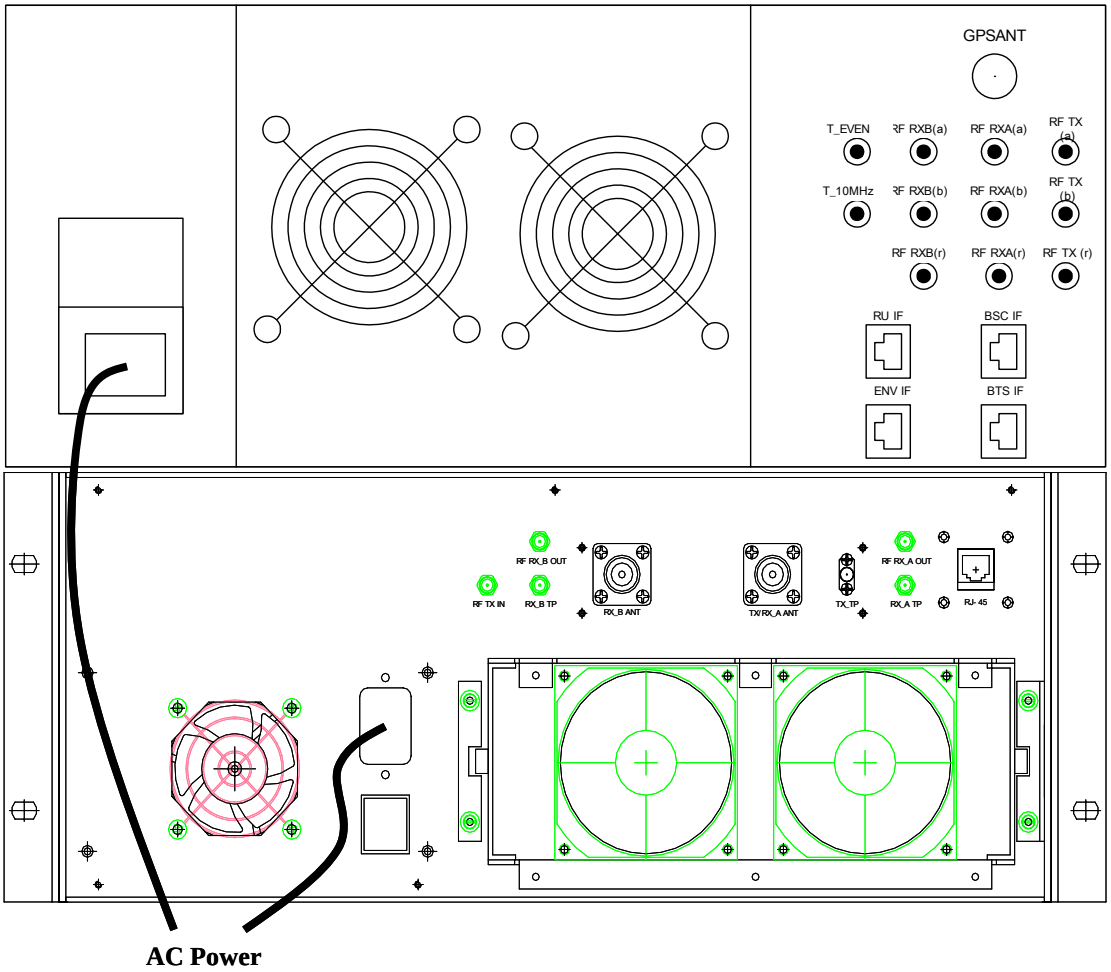

Figure 6-3 AW 96 Power Cabling

6.3 Ethernet Cable Wiring

Connect Integrated Omni RU to AW-96 using supplied Ethernet cable as shown in Figure 6-4 (1). Connect external Ethernet connections to the BTS and BSC Ethernet ports on the AW-96 (2).

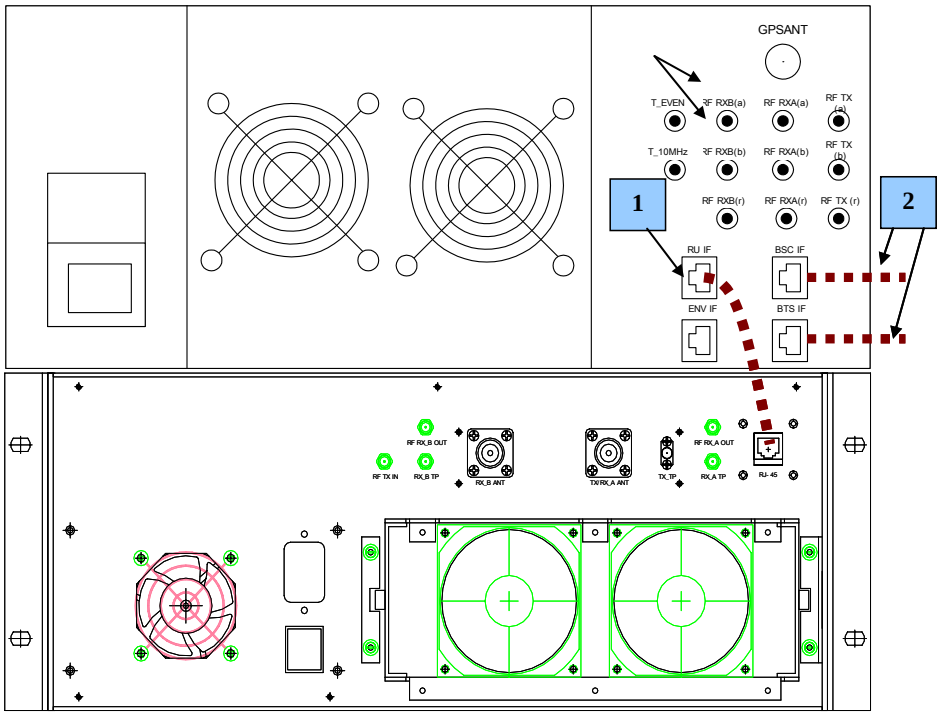

Figure 6-4 Ethernet Cable Wiring

6.4 GPS Antenna Cable Wiring

Connect the external GPS antenna RF cable to the GPS antenna port on the AW-96 unit as shown in Figure 7-5. The GPS connector is an “TNC” connector. The AirWalk GPS antenna kit (AWANC001GPCA01) includes a GPS antenna, mounting hardware and a 25m cable (RG-58 or better).

Note the GPS antenna must located outside in a position to see the general sky. The GPS antenna must see at least 4 GPS satellites in the sky to receive enough time information for proper system operation.

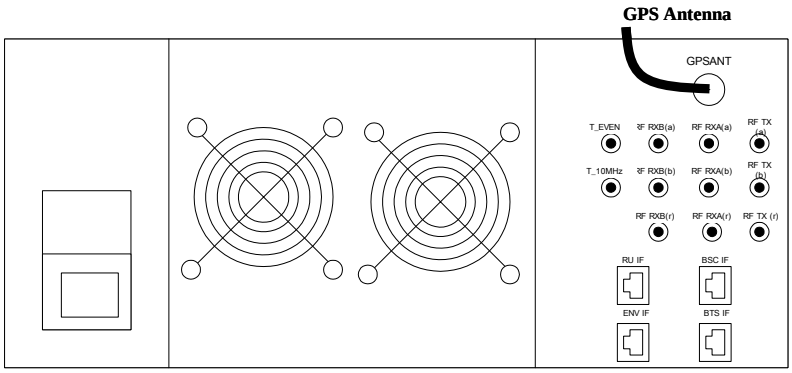

Figure 6-5 GPS Antenna Cable Wiring

6.5 Photograph Of Typical Cable Wiring

Figure 6-6 shows the actual cabling found in a typical system installation.

Figure 6-6 – Integrated RU Field Installation Photograph

7 AW 96 Sector RU Interface Cabling

7.1 RF Cabling – Sector RU Configuration (3 Sector)

The AW 96 transmitter exciter output and diversity receiver inputs are connected to the Sector RU which contains the duplexer, LNA (Low Noise pre-Amplifier) and HPA (High Power Amplifier) functions. Connect using jumper cables as shown in Figure 7-1.

Use only the cables supplied with the RU system for interconnection to the AW-96. Cables are labeled for ease of installation. See Figure 7-2 for cable specification.

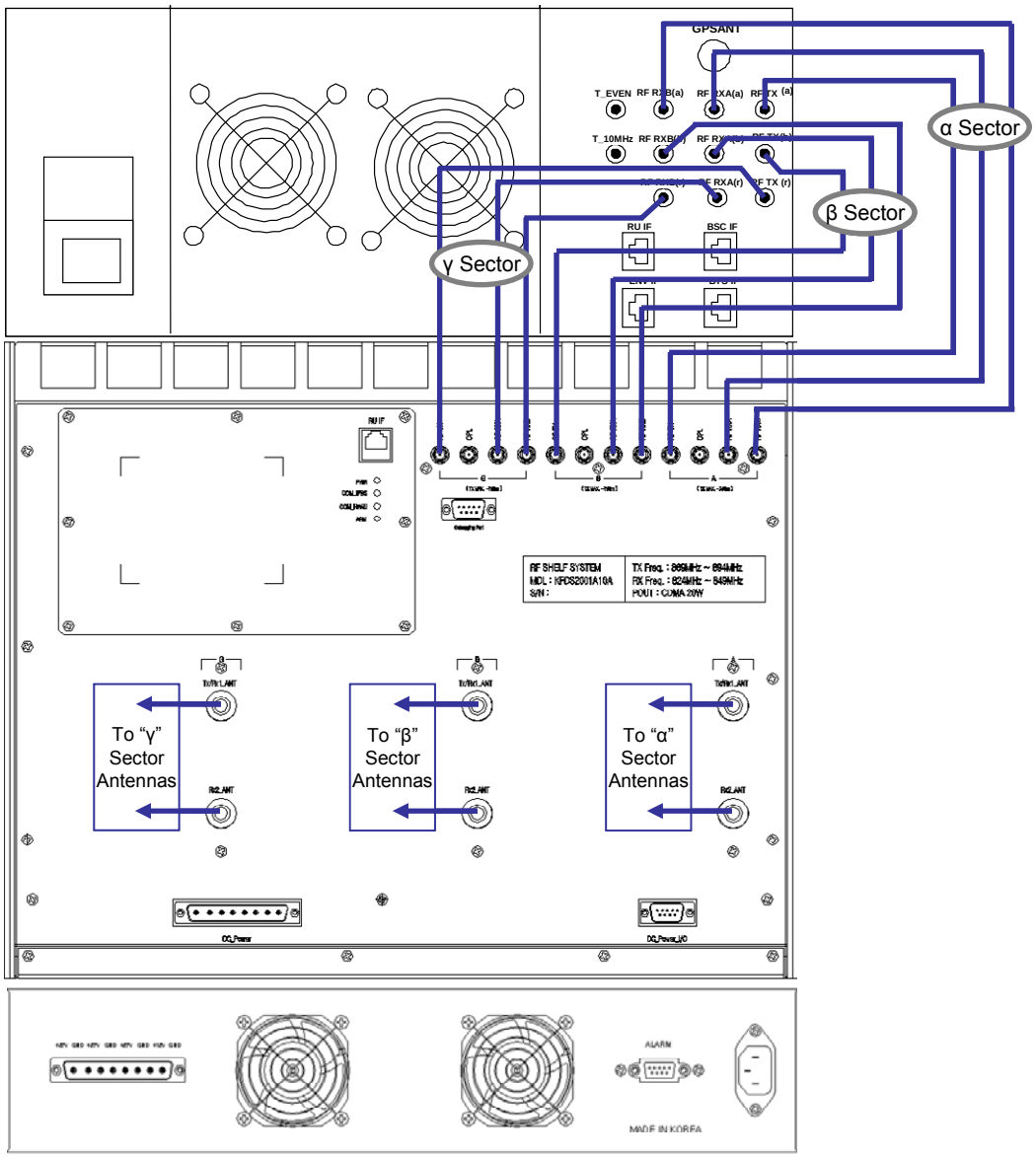

Figure 7-1 AW-96 to Sector RU RF Cable Connections

It is important to ensure transmit and receive connections are made correctly to prevent damage or field operational problems such as:

- Damage due to transmitting into a receiver port
- Crossed over diversity receive ports
- Crossed over sectors which could disrupt RF system design/optimization

Connect the external transmission lines from the diversity antenna systems to the RU Antenna connections as shown in Figure 7-1. External connectors are “N-Type”.

Note that transmission line (or jumpers to transmission line) type and length will impact the overall link budget calculations for the cell site. Be sure to include these losses in the RF system design calculations for coverage.

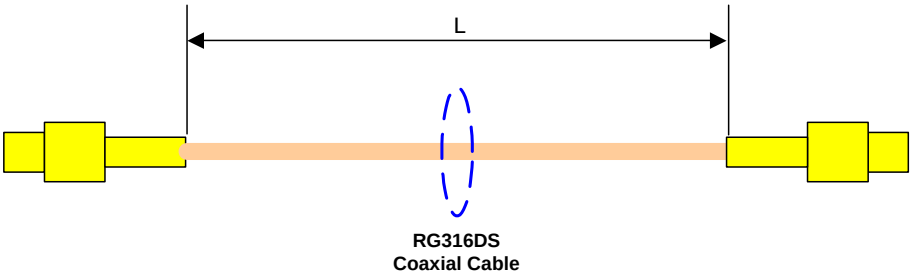

Figure 7-2 AW-96 to RU RF Cable Specification

7.2 RU Power Supply Interconnect Wiring

Connect the power interconnect cable between the RU main assembly and the RU power supply as shown in Figure 7-3. Use only the cable supplied with the RU system for this purpose. Tighten connector captivating screws to prevent accidental disconnection.

Connect the RU power supply alarm interconnect cable between the RU main assembly and the RU power supply as shown in Figure 7-3. Use only the cable supplied with the RU system for this purpose. Tighten connector captivating screws to prevent accidental disconnection.

7.3 Ethernet/Serial Cable Wiring

Connect RU interface cable between the AW-96 RU I/F port and the RU RU I/F port as shown in Figure 7-3. This connection allows the AW-96 to communication with RU system for the purposes of transferring measurements, alarms and control functions. Use only the serial cable supplied with the RU system for this purpose. Ensure the RJ-45 connectors are properly seated (“click”) to prevent accidental disconnection.

Connect the external Ethernet connections (cable not supplied) from the local Ethernet switch or hub at the cell site to the BTS and BSC Ethernet ports on the AW-96 as shown in Figure 7.3. Use category 5 Ethernet cable (or better) for best performance.

7.4 Electric Power Cable Wiring

Connect AW-96 and Sector RU system to suitable AC power sources as shown in Figure 7-3. Use only the AC power cables provided with AW 96 unit and the RU unit to ensure continued safe operation.

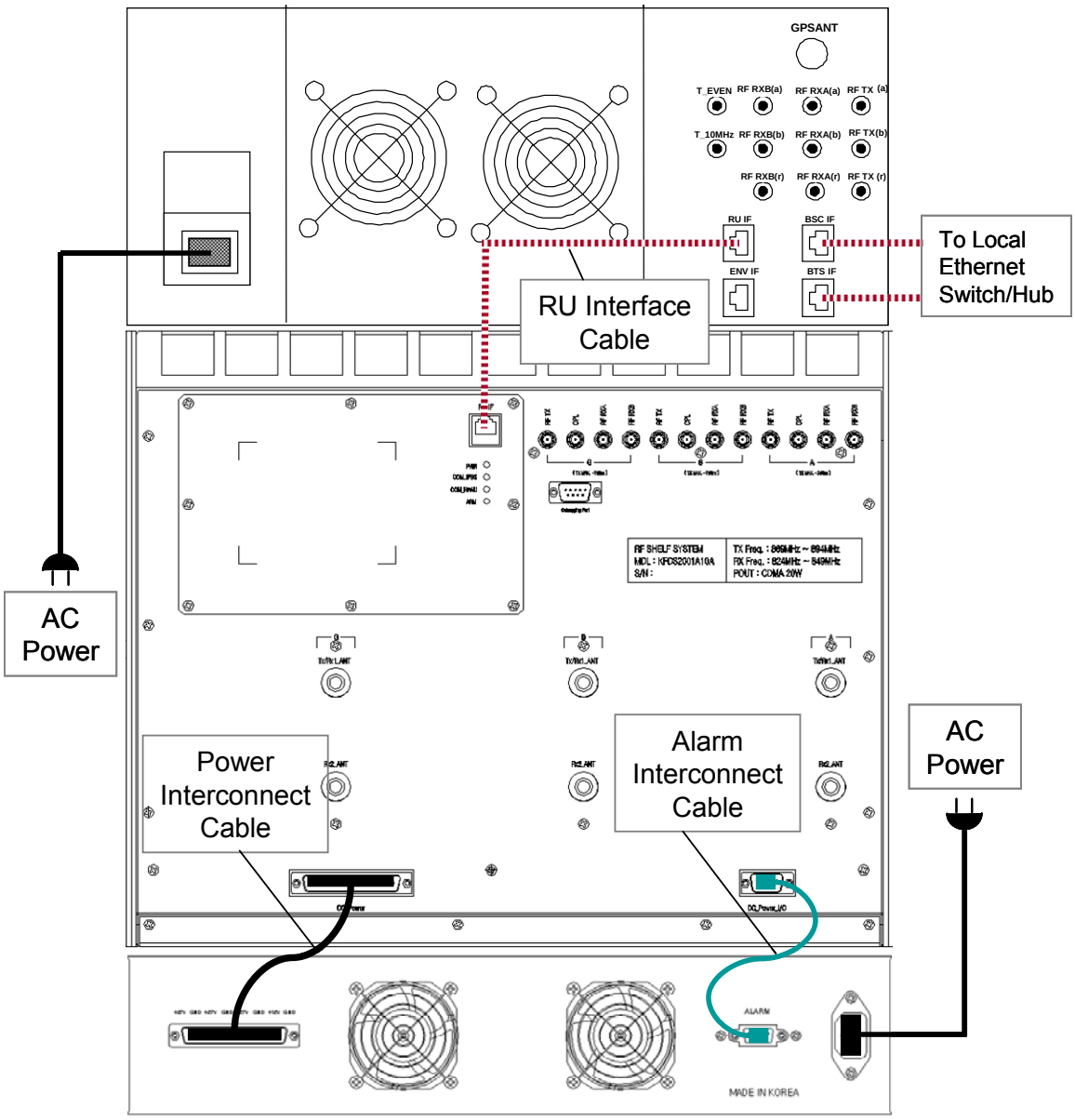

Figure 7-3 AW-96 to RU Serial/Ethernet/Power Connections

7.5 GPS Antenna Cable Wiring

Connect the external GPS antenna RF cable to the GPS antenna port on the AW-96 unit as shown in Figure 7-5. The GPS connector is an “TNC” connector. The AirWalk GPS antenna kit (AWANC001GPCA01) includes a GPS antenna, mounting hardware and a 25m cable (RG-58 or better).

Note the GPS antenna must located outside in a position to see the general sky. The GPS antenna must see at least 4 GPS satellites in the sky to receive enough time information for proper system operation.

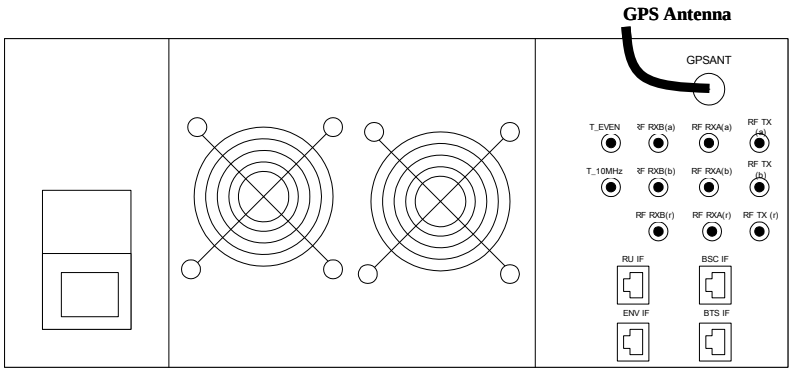

Figure 7-5 GPS Antenna Cable Wiring

7.6 Photograph Of Typical Cable Wiring

Figure 7-6 shows the cabling found in a typical Sector RU system installation.

Figure 7-6 Sector RU Field Installation Photograph

8 AW 96 Low Power (PicoCell/MicroCell) Cabling

The following connections are required for AW 96 stand-alone applications, including PicoCell and MicroCell. AW 96 units for these applications are normally configured for 50mW power output and are equipped with an internal duplexer function which requires only a single antenna for normal operation. A second diversity receiver connection is provided if required for the application

Connect power, Ethernet, GPS and RF antenna cables as shown in the diagram below.

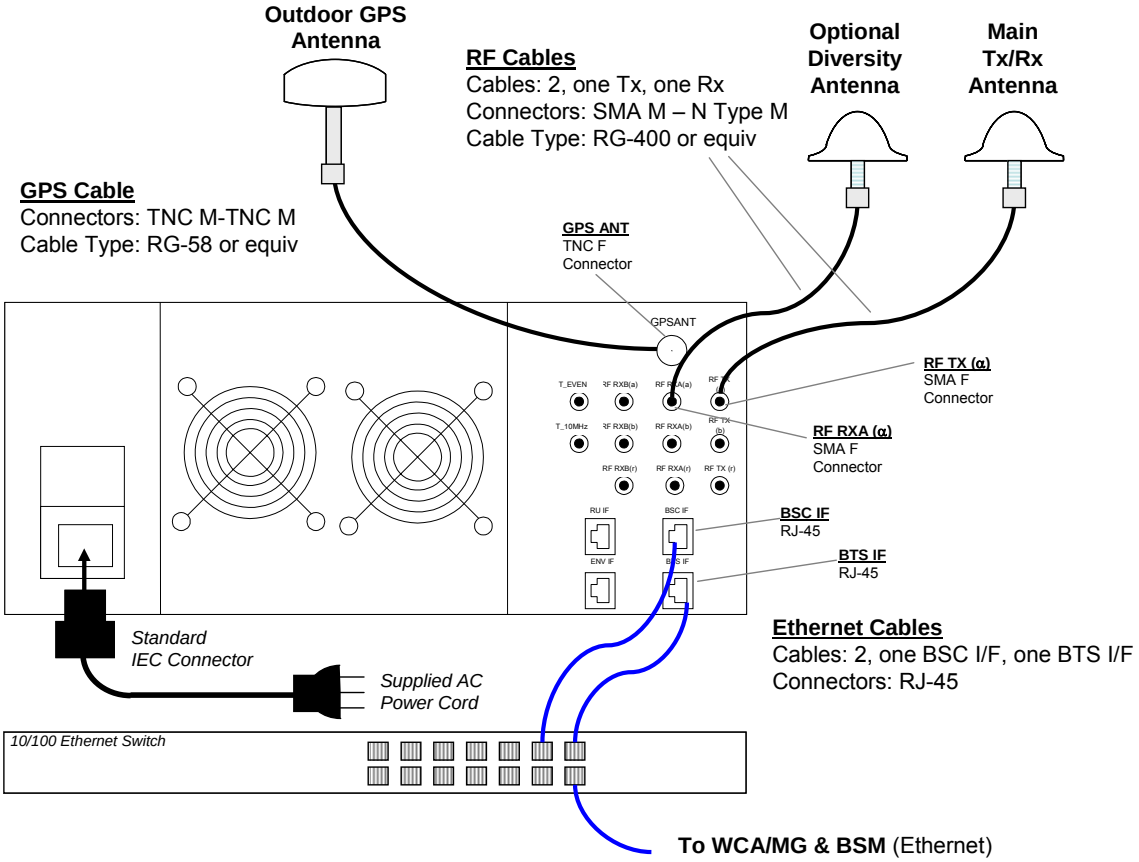

Use only the AC power cables provided with AW 96 unit unit to ensure continued safe operation.

Use recommended RF and Ethernet cables or equivalent.

Use the optional AirWalk GPS antenna kit (AWANC001GPCA01) when GPS is required for the application. This kit includes a GPS antenna, mounting hardware and a 25m cable.

Note the GPS antenna must located outside in a position to see the general sky. The GPS antenna must see at least 4 GPS satellites in the sky to receive enough time information for proper system operation when GPS is required.

9 Frequency Setting Procedures

9.1 BSM Management

The AW-96 series base stations are normally managed by the centrally located BSM (Base Station Manager) system which communicates with the AW-96 over an IP connection.

The BSM will download system software and configuration information which includes the physical FA (Frequency Assignment) for each base station. The base station will tune to the correct frequency as defined by the BSM configuration files.

Refer to the BSM operations manual for instructions on base station remote configuration.

9.2 Local FA Setting

It may required to set the AW-96 series base station physical FA (frequency assignment) locally for specialized test purposes or when the BSM connection is unavailable (for example during early BTS installations). This can be done using the local MMI (Man Machine Interface) port and a local PC.

The configuration data downloaded from the BSM will override local settings when BSM connections are established.

Refer to the MMI instruction manual for further information on other commands.

9.2.1 MMI Connection

Connect the serial port of the PC to the “BTS MMI” port on the AW-96 front panel. Use the cable described in section 8.3.1 and the following port settings:

9600 baud

8 bit

No Parity

1 stop bit

No flow control

9.2.2 FA Change Procedure

The following menu driven commands will permit local change of the FA.

Step 1

At the prompt enter the following:

> pn3383 // this will take you to the menu screen which looks something like this:

```
================  PN 3383  ====================

   1. Tx Test
   2. Rx Test
   3. ParameterSetup
   4. Rf Gain Display
   5. xcvbSetup
   6. ampSetup
   7. Normal Gain Display
   8. MakeTestCall
   9. callClear
  10. Overhead Calibration Control
  11. Test Phone Setup (619 2221001)
  12. Handoff Test
   0. Exit
 ---------------------------------------------------
   Select Number ===>
```

Step 2

Enter the following:

Select number => 5 // it will take you to the below menu screen.

```
================  Xcvb Setup  ====================
    1. Change Ch
    2. Tx On
    3. Tx Off
    4. Rx_Main_AGC ON
    5. Rx_Main_AGC OFF
    6. Rx_Sub_AGC ON
    7. Rx_Sub_AGC OFF
    8. Set RxMain ATT
    9. Set RxSub ATT
   10. Set Tx Att
   11. Xcvb Status
   12. showXcvrAttGain
    0. Exit
 ------------------------------------------------
    Select Input Number =====>
```

Step 3

Enter the following:

Select Input Number => 1 // choosing 1 will take you to the below menu.

ALPHA : xcvrChangeCh Num [001 ~ 1500] [1175] [/0:Exit]==>

Step 4

From the above menu, type the new channel desired (CDMA channels from 1 to 1500) and 0 to exit. Note that for 3 sector base stations Step 3 must be repeated for each sector (alpha, beta, and gamma).

Note that only standard CDMA channel numbers within the designated band capability of the radio will be accepted by the base station.

10 Installation Procedures

This Section gives definitions and instructions for installing the AW-Series IP-RAN and for connecting it to the wireless carriers infrastructure. It contains detailed definitions needed for completing site Installation Checklist (Appendix B).

10.1 Installation Verification

Before installing the equipment, it is necessary to verify the following:

10.1.1 Verify Customer Contact & Equipment location

10.1.1.1 Contact Customer[1]

1) Verify contact name check Site Preparation Planning Checklist Appendix B.
2) Verify contact phone number.
3) Introduce yourself to the Customer contact.
4) Introduce Installation team (if more than one person on team).
5) Verify that all current customer contacts are listed.
   a) Verify that contacts can solve problems within a timely manner for:
      i) Power Connection(s),
      ii) T1 Connection(s),
      iii) LAN Connection(s),
      iv) If not, have main customer contact provide names and method of contacting.
6) Determine when contacts are available for help (e.g.; Time of day, day of week.).
7) Obtain any site access or security requirements (e.g.: ID Badges, Card-keys, Keys, Access codes) required to access installation site.
8) Indicate all changes on checklist.

10.1.1.2 Locate AW-SERIES IP-RAN Equipment.[2]

1) Determine where AW-SERIES IP-RAN is stored.
2) Check for any visible shipment damage.

---

[1] NOTE: Make sure all changes are sent to the Installation Coordinator Immediately.

[2] NOTE: If any visible damage contact the Installation Coordinator immediately.

10.1.1.3 Locate and verify floor space.

1) Determine where the AW-SERIES IP-RAN is to be installed (Refer to site diagram in Appendix B).

2) Verify that there is enough space to safely install it (Refer to site diagram in Appendix B).

10.1.2 Uncrate and arrange for packing material disposal

1) Carefully unpack the AW-SERIES IP-RAN and related components from packing material.

2) Check for any shipment damage.[3]

3) Be certain that all components match system order.[4]

4) Make arrangements with customer contact on where, when, and how to dispose of all AW-SERIES IP-RAN packing material.

10.1.3 Verify location of all Facility distribution points (main and intermediate)

10.1.3.1 Power Check.

10.1.3.1.1 Power Location

1) Locate the customer provided power connection.

   a) There should be a –48VDC connection for DC powered models (if required).

   b) There should be a 120 or 240 VAC connection for AC powered models (if required).

10.1.3.1.2 Verify Connector.

1) An 8 AWG three wire stranded cable to connect to a WECO DC terminal block connector is required for –48VDC (if required).

2) A 6ft (1.84m) e conductor type SJT cables with standard grounded connector is required for 110VAC connection (if required).

---

[3] ***NOTE: Note any damage on shipping report, and Installation Checklist. Contact the Installation Coordinator immediately***

[4] ***NOTE: If components do not match the system order, contact the Coordinator immediately.***

10.1.3.1.3 Voltage

1) Using a power meter check for correct voltage.
   a) –48VDC range is 40VDC to 57VDC (if required).
   b) 120 VAC range is 90 VAC to 132 VAC (if required).
   c) 240 VAC range is 180 VAC to 264 VAC (if required).

10.1.3.1.4 Amps

1) Check cables to determine if they will handle required Amps.
   a) –48VDC should be able to support 27.9 Amps.
   b) 120 VAC should support 15 Amps, 240 VAC should support 7.5 Amps

10.1.3.1.5 LAN Facilities check.

1) Location – Locate the customer provided LAN connections.
2) Verify IP Address (Site Prep Checklist Appendix B).
3) Verify Connector is an RJ45 (if not contact customer).
4) Connect Laptop and Ping IP Address.
5) Prepare a site IP addressable device diagram showing the IP address for each device at the base station site. This diagram is essential for any needed troubleshooting activities.
6) Post the diagram at the site and return a copy to the customer's maintenance center and a copy to the AirWalk customer service center:

AirWalk Customer Service Centre
1830 North Greenville Ave.,
Richardson, Texas 75081

10.2 AW-SERIES IP-RAN Install Procedures

10.2.1 Install AW-SERIES IP-RAN Cabinet

Move AW-SERIES IP-RAN to location.

Secure AW-SERIES IP-RAN in designated location
(Bolt down or Secure Wheels if provided).

10.2.2 Verify All Internal System Connections

To verify all internal connections refer to the Section and Figures in the following Table for proper cable installation.

Section	Description	Reference	✓
6.1	RF Cable - AW-96 to RU	Figure 6-1 Use RF cables supplied with AW-96.	
6.3	Ethernet Cable – AW-96 to RU	Figure 6.4	

Table 7-1 - Internal System Cable Reference

10.2.3 External System Connections[5]

To install new internal connections refer to the Section and Figures in the following Table for proper cable installation.

Section	Description	Reference	✓
6.1	External Diversity Antenna System	Figure 6-2	
6.2	Electrical Power Cable	Figure 6-3 Use AC power cables supplied with AW-96.	
6.3	External BSC & BTS Ethernet Cable	Figure 6-4	
6.4	External GPS Antenna Cable	Figure 6-5	

Table 7-2 - External System Cable Reference

10.2.4 Connect Power to Cabinet

Connect -48VDC to DC distribution panel (if applicable).

Connect 120VAC or 240VAC to Rack AC distribution panel (if applicable).

10.2.5 Connect Communications Facilities

Connect LAN Facilities to BSC

Connect LAN Facilities to BTS.

---

[5] ***WARNING: Make sure all system power supplies are turned off. All breakers/Fuses are pulled on all main and intermediate panels. Then proceed with the Installation.***

10.2.6 Power-up procedure[6][7]

10.2.6.1 Power-up Main cabinet.

Make sure all appropriate LED's are illuminated.

10.2.6.2 Complete any Configuration options.

a) Configure the AW-SERIES IP-RAN.

i) Outgoing and incoming channels.

10.3 System Test

This section contains the system tests that should be completed to determine if AW-SERIES IP-RAN is operational.

10.3.1 PC to AW 96 cable

A special cable is required to run the required certification tests.

Connect a PC with the subject cable to run tests

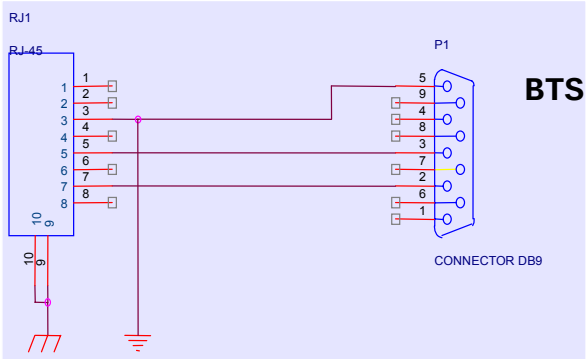

Pin Configuration

DB9 (Computer)	RJ-45 (BTS)
5	3
3	5
2	7

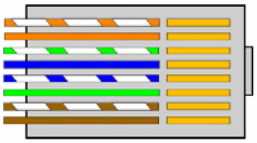

Figure 7-1 - PC to AW 96 Cable Specifiaction

[6] Note: Once all connections are made, make sure to: Reset/install all breakers/fuses for all main and intermediate breaker/fuse box(s). Then proceed with the Installation.

[7] Make sure all added cabling is tie-wrapped correctly

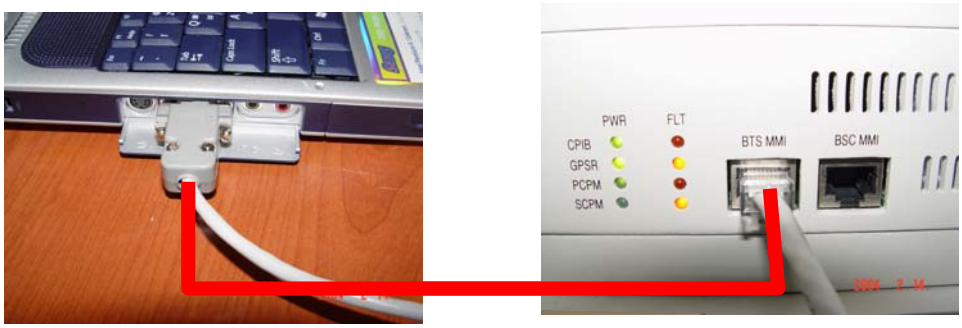

Figure 7-2 - PC to AW 96 Cable Connection Diagram

10.3.2 System Certification Tests

Start The AW-SERIES IP-RAN tests.

This sequence of test cases is designed to certify the AW 96 IP-RAN installation.

It is assumed the person running this checklist is familiar with the basics of configuring, running, stopping, and starting the AW 96 IP-RAN.

10.3.2.1 Test Case #1 - Image/PLD loading

10.3.2.1.1 Test Procedure #1

- Command: user: ipbs001

  FTP password: ipbs001
- Command: Edit:

  - P: display

  - C: edit

10.3.2.1.2 Expected Result of Case #1

Screen from PC using ftp Server is shown in Figure 7-3.

```
boot device          : motfcc
unit number          : 0
processor number     : 0
host name            : CPIB30a
file name            : c:/IPBS/aw_bts        ← image file name in PC
                                   (PLD : c:/IPBS/pld/bs001/file_name)
inet on ethernet (e) : 211.104.114.5:0xffffff00
                                             ← bts IP addr./netmask
host inet (h)        : 10.0.0.12             ← PC IP addr.
gateway inet (g)     : 211.104.114.1
user (u)             : ipbs
ftp password (pw)    : ipbs
flags (f)            : 0x0
target name (tn)     : cpib
other (o)            : 1                      ← BTS/BSC ID
```

Figure 7-3 - Screen from PC Screen from WPM

```
boot device          : motfcc
unit number          : 0
processor number     : 0
host name            : CPIB30a
file name            : aw_bts            ← image file name
                                           (PLD : automatic loading)
inet on ethernet (e) : 211.104.114.5:0xffffff00
                                         ← bts IP addr./netmask
host inet (h)        : 211.219.56.125    ← WPM IP addr.
gateway inet (g)     : 211.104.114.1
user (u)             : ipbs
ftp password (pw)    : ipbs
flags (f)            : 0x0
target name (tn)     : cpib
other (o)            : 1                  ← BTS/BSC ID
```

Figure 7-4 - Screen from PC

10.3.2.2 Test Case #2 – System Check

10.3.2.2.1 Test Procedure #2

- Command: Version

10.3.2.2.2 Expected Result of Case #2

```
-> version
VxWorks (for AirWalk8260 – XPC8260 PowerQUICC II) version 5.4.
Kernel: WIND version 2.5.
Made on Feb 10 2004, 20:07:03.
Boot line:
motfcc(0,0)CPIB30a:aw_bts e=211.104.114.5:0xffffff00
h=211.219.56.125 g=211.104.114.1 u=ipbs pw=ipbs tn=cpib o=1
value = 124 = 0x7c = '|'
```

Figure 7-5 - Version Command Screen

10.3.2.3 Test Case #3 – Tx check

10.3.2.3.1 Test Procedure #3

- Command: txReason
- Expected Result of Case #3

```
-> txReason

        [ TX REASON ]
=========================================================
 ALPHA  : PICH  OK   SYCH  OK   PCH  OK   ACH  OK   RF  OK
 BETA   : PICH  OK   SYCH  OK   PCH  OK   ACH  OK   RF  OK
 GAMMA : PICH  OK   SYCH  OK   PCH  OK   ACH  OK   RF OK
       BSC  OK
_____________________________
 ALPHA  SUBCELL ........................................ OK
 BETA   SUBCELL ........................................ OK
 GAMMA  SUBCELL ........................................OK
=================================================
value = 68 = 0x44 = 'D'
```

Figure 7-6 - Tx Check Screen

10.3.2.4 Test Case #4 – Output power

10.3.2.4.1 Test Procedure #4 – RF Check

- Command: showRfGain

10.3.2.4.2 Expected Result of Case #4

```
-> showRfGain

================== RF Gain Display ==================
          SectorGain |  XCVR Gain  | HPA Gain[20W]
_____________________________________________________
Alpha   | 768(0x300) | -22dBm[0.60mW] | 32.4dBm[1.74W]
Beta    | 768(0x300) | -22dBm[0.60mW] |  32.4dBm[1.74W]
Gamma|  768(0x300) | -22dBm[0.60mW] |  32.8dBm[1.91W]
_____________________________________________________
value = 58 = 0x3a = ':'
```

Figure 7-7 - RF Check Screen

10.3.2.5 Test Case #5 – GPS Check

10.3.2.5.1 Test Procedure #5

- Command: gpsStatus

10.3.2.5.2 Expected Result of Case #5

```
-> gpsStatus
_____________________________________________________
  GPS STATUS......................... 0x2
_____________________________________________________
      0x00 : Reserved
      0x01 : Unavailable
      0x02 : Available
      0x04 : OCXO Warmup
      0x08 : Not used
      0x10 : LeapSec positive pending
      0x20 : LeapSec negative pending
```

Figure 10-8 – GPS Status Check Screen

```
_____________________________________________________
  GPS ALARM........................... 0x4
_____________________________________________________
      0x01 : Antenna Power Abnormal
      0x02 : HoldOver
      0x04 : HoldOver Range Over
      0x08 : GPS Engine Abnormal
      0x10 : 10MHz Generation Abnormal
      0x20 : 19.6608MHz Generation Abnormal
      0x40 : Antenna Alarm
      0x80 : Reserved
```

Figure 10-9 - GPS Alarm Check Screen

10.3.2.6 Test Case #6 – BTS Alarm Check

10.3.2.6.1 Test Procedure #6

- Command: showAlarm

10.3.2.6.2 Expected Result of Case #6

```
-> showAlarm
------------------------ Current Alarm Status ------------------------
Num Name                    BS  Sec Status Time
70  BTS_COLD_START_NTF      1   255 clear THU JAN 01 00:00:00 1970
1   BTS_AMP_LINK            1   255 clear THU JAN 01 00:08:42 1970
31  BTS_FANFAIL_A           1   255 clear THU JAN 01 00:08:52 1970
41  BTS_GPS_ANT_FAIL_ALM    1   255 HAPPE THU JAN 01 00:08:42 1970
43  BTS_GPS_RANGEOVER_ALM   1   255 HAPPE THU JAN 01 00:08:42 1970
```

Figure 10-10 - BTS Alarm Check Screen

10.3.2.7 Test Case #7 – System Reset

10.3.2.7.1 Test Procedure #7

- Command: btsReset/bscReset/allReset

10.3.2.7.2 Expected Result of Case #7

The system is RESET

10.3.2.8 Test Case #8 – PN Check

10.3.2.8.1 Test Procedure #8

- Command: RcmCmd 1,1

10.3.2.8.2 Expected Result of Case #8

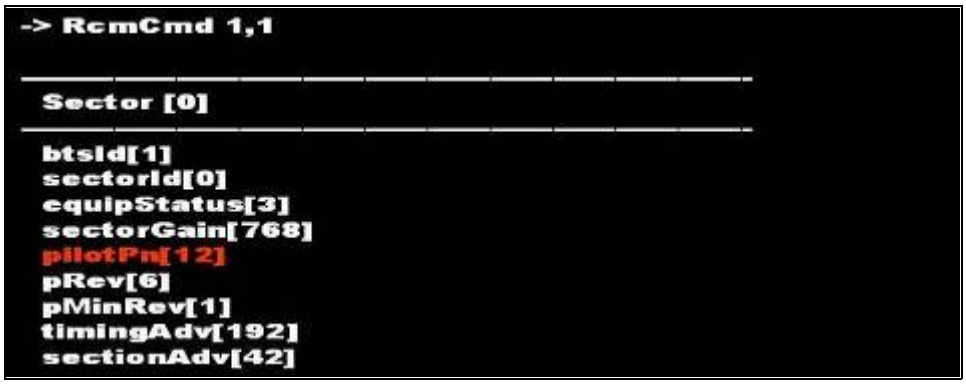

Figure 10-11 - PN Check Screen

10.3.2.9 Test Case #9 – System Interface Check

10.3.2.9.1 Test Procedure

- Command: Ping

  Send Ping Command to the Following system IP Addresses

  1. WPM (Wireless PBX Manager)
  2. PDSN (Packet Data Serving Node)
  3. CA (Call Agent)
  4. MG (Media Gateway)
  5. SG (Signal Gateway)

10.3.2.9.2 Expected Result of Case #X

A successful PING command response from each system.

10.3.3 Operation Tests

These test cases are designed to determine if AW 96 is ready for production testing.

10.3.3.1 Test Case #1 – Voice Calls

10.3.3.1.1 Test Procedure

Test Call From MS #1 to MS #2.

Test Call From MS #1 to Landline Phone #1.

10.3.3.1.2 Excepted Result of Case #1

1. 2nd MS Rings and call is answered

2. Landline phone Rings and call is answered.

10.3.3.2 Test Case #2 – Data Calls

10.3.3.2.1 Test Procedure

1. A Test Data Call From MS #1 to MS #2.
2. A Test Data Call From MS #2 to MS #1.

10.3.3.2.2 Excepted Result of Case #2

1. A Data Session is established between MS #1 and MS #2.
2. A Data Session is established between MS #2 and MS #1.

10.3.4 Operator Specific Tests

These test cases are covered in a separate test plan document and are agreed to by the operator and AirWalk Communications, Inc.

10.4 Site Clean up and Customer Signoff

10.4.1 Dispose of all packing material.

Make sure to dispose of all AW-SERIES IP-RAN packing material.

10.4.2 Clean-up site.

Make sure not to leave anything but the installed AW-SERIES IP-RAN. (e.g., excess tie-wraps, bolts, etc).

10.4.3 Update Installation Checklist.

Make sure all changes are notes on Installation Checklist.

10.4.4 Customer Signoff.

Get Customer Signature on Certification Document Appendix D.

10.5 Required Tools and Supplies

1) Hand Tools
   a) Screwdriver set,
   b) Pliers set,
   c) Nut Driver set,
   d) Cutter set,
   e) Punch Down Tool,
   f) Wire-wrap (Optional),
   g) RJ-45 Crimper.

2) Test Equipment.
   a) Multi-Meter & Adapter kit,
   b) Cable Tester,
   c) Protocol Analyzer & Adapter kit,
   d) Telephone Test Set (Butt-set),
   e) Set of Banjo adapters
   f) Tone Generator & Inductive pick-up.
3) Supplies.
   a) RJ-45,
   b) Cat 5 Cable,
   c) Tie-wraps.

10.6 Troubleshooting Procedures

The AW-SERIES IP-RAN is designed to provide reliability and consistently high performance in all network environments. The installation procedure for the AW-SERIES IP-RAN is a straightforward and is discussed in these sections.

Should problems develop during installation, this section is intended to help locate, identify and correct these types of problems. Please follow the suggestions listed below prior to contacting AirWalk Communications, Inc. or Carrier contacts. If you are unsure of the procedures described in this section, contact the Installation coordinator immediately.

10.6.1 Before Calling for Assistance

1) If difficulty is encountered with a specific component of the AW-SERIES IP-RAN, refer back to the Installation Section for that component.
2) Check the cables and connectors to ensure that they have been properly connected and the cables/wires have not been crimped or impaired in some way during installation. (About 90% of component problems can be attributed to wiring and connector problems).
   a) Check Cable,
   b) Check connector,
   c) Check for solid connection,
   d) Check with Carrier contact.
3) Make sure that all power cord is properly attached to each AW-SERIES IP-RAN component. Be certain that all power cords are plugged into a functioning electrical outlet. Use the PWR LED's to verify each unit is receiving power.
   a) Check intermediate breakers or fuses.
4) If the problem is isolated to something other than the AW-SERIES IP-RAN contact the appropriate Carrier contact.

5) Verify whether or not the problem is corrected. If not, go to Step 6 below. If the problem is corrected, continue with installation.

6) If the problem continues after completing Step 4 above, contact the AirWalk Communications, Inc. Installation Project manager, to determine the next course of action.

10.6.2 When Calling for Assistance

Please be prepared to provide the following information.

1) A complete description of the problem, including the following points:
   a) The nature and duration of the problem;
   b) Situations when the problem occurs;
   c) The components involved in the problem;
   d) Any particular application that, when used, appears to create the problem;
2) A record of changes that have been made to the AW-SERIES IP-RAN configuration prior to the occurrence of the problem.
3) Any changes to system should all be noted.

11 Appendix A - Acronyms

Acronym	Description
2G	Second Generation in CDMA wireless network
3G	Third Generation in CDMA wireless network
AC	Alternating Current
Access Channel	A Reverse CDMA Channel used by mobile stations for communicating to the base station. The Access Channel is used for short signaling message exchanges, such as call originations, responses to pages and registrations. The Access Channel is a slotted random access channel.
ACH	Access Channel
AD	Analog to Digital
AFEU	Antenna Front End Unit
AGC	Automatic Gain Control
ANT	Antenna
AWGN	Additive White Gaussian Noise
Base Station (BS)	A fixed station used for communicating with mobile stations. Depending upon the context, the term base station may refer to a cell, a sector within a cell, an MSC, or other part of the wireless system.
BCCM	BTS Call Control Module
BHCA	Busy Hour Call Attempts
BLK	Blank
BS	Base Station
BSAP	Base Station Application Part
BSC	Base Station Controller
BSMAP	Base Station Management Application Part
BTS	Base station Transceiver Subsystem
CA	Call Agent
CAI	Common Air Interface
CC	Connection Confirm
CCM	Channel Control Module in BTS
CDMA	Code Division Multiple Access
CEC	Channel Elements Control Block
CED	Channel Elements Diagnostic Block
CLAP	Composite Link Analysis Platform
CPIB	BTS Channel and Call Processing Interface Board
CPU	Central Processing Unit
CR	Connection Request
CREF	Connection Refused
CSM5000	Cell Site Modulator 5000 (CDMA ASIC chip released by Qualcomm for cdma2000)
DA	Digital to Analog
DC	Direct Current
DCCH	Dedicated Control Channel
DCLI	Data Link Connection Identifier
DRS	Data Ready to Send
DT	Data Form

Acronym	Description
DTAP	Direct Transfer Application Part
EMI	Electro-Magnetic Interference
ESN	Electronic Serial Number
EVDO	Evolution Data Only
EVDV	Evolution Data and Voice
EVRC	Enhanced Variable Rate CODEC
FA	Frequency Assignment
FCC	Federal Communications Commission
F-CCH	Forward Common Control Channel
FCH	Fundamental Channel
F-DCCH	Forward Dedicated Control Channel
FDCH	Forward Dedicated Signaling Logical Channel
FER	Frame Error Rate
FM	Fault Management
FO	Frame Offset
Forward Traffic Channel	One or more code channels used to transport user and signaling traffic from the base station to the mobile station.
FSCH	Forward Common Signaling Logical Channel
GND	Ground
GPS	Global Positioning System
GRE	Generic Routing Encapsulation
HLR	Home Location Register
HO	Handoff
HPAU	High Power Amplifier Unit
IF	Intermediate Frequency
IMSI	International Mobile Subscriber Identity
ING	Inter Network Gateway
IOS	Interoperability System
IP	Internet Protocol
IPC	Inter Processor Communication
LAC	Link Access Control. Entity that provides assured mode or unassured mode delivery of information across the air interface between the mobile station and the base station.
LPA	Linear Power Amplifier
LTU	Logical Transmission Unit One or more Type 3 or Type 5 MuxPDUs with a 16bit CRC.
MAC	Medium Access Control Entity that controls the access to and from Upper Layer Signaling, Data Services and Voice Services to Physical Layer resources.
MAHHO	Mobile Assisted Hard Hand Off
MCC	Main Call Control module in IP-BSC
MG	Media Gateway
MIMO	Multi Input Multi Output
MIN	Mobile Identification Number
MMC	Man-Machine Command
MMS	Multimedia Messaging Service
MN	Mobile Node

Acronym	Description
MS	Mobile Station
MSC	Mobile Switching Center
MTBF	Mean Time between Failure
MTTR	Mean Time to Repair
NDSS	Network Directed System Selection
NGN	Next Generation Networks
NMS	Network Management System
OAM	Operation, Administration, and Maintenance
OCNS	Orthogonal channel Noise Simulator
OS	Operating System
OTD	Orthogonal Transmit Diversity
OUNS	Other User Noise Source
PACA	Priority Access Channel Assignment
Paging Channel	A code channel in a Forward CDMA Channel used for transmission of control information and pages from a base station to a mobile station
PBA	Printed Board Assembly
PBX	Private Branch Exchange
PCB	Printed Circuit Board
PCF	Packet Control Function in IP-BSC
PCH	Paging Channel
PCM	Pulse Code Modulation
PCPM	Primary BSC Call Processing Board
PDSN	Packet Data Serving Node
PDU	Protocol Data Unit. An atomic set of data, header information, and control information that are provided by a service user to a service provider.
PER	Packet Error Rate
Physical Channel	Radio transmission link
Pilot Channel	An un-modulated, direct-sequence spread spectrum signal transmitted by a CDMA base station or mobile station. A pilot channel provides a phase reference for coherent demodulation and may provide a means for signal strength comparisons between base stations for determining when to handoff.
PLD	Program Loaded Data
PN	Pseudo Noise
PSA	Power Supply Assembly
PSTN	Public Switched Telephone Network
QCELP	Qualcomm Code Excited Linear Prediction
QOF	Quasi-Orthogonal Function
QOF	Quasi Orthogonal Function
QoS	Quality of Service
RAN	Radio Access network
RC	Radio Configuration
RCC	Radio interface Call Control
RDCH	Reverse Dedicated Signaling Logical Channel
Reverse Traffic Channel	A traffic channel on which data and signaling are transmitted from a mobile station to a base station. The Reverse Traffic Channel is composed of up to one Reverse Dedicated Control Channel, up to one Reverse Fundamental Channel, zero to two Reverse Supplemental Channels, and zero to seven Reverse

Acronym	Description
	Supplemental Code Channels.
RF	Radio Frequency
RLC	Release Complete
RLP	Radio Link Protocol. Connection-oriented, negative-acknowledgement-based data delivery protocol.
RLSD	Released
RP	Radio Network – PDSN
RPSU	Remote RF Power Supply Unit
RRCU	Remote RF Control Unit
RRM	Radio Resource Management Block
RRP	Registration Reply Message
RRQ	Registration Request Message
RSCH	Reverse Common Signaling Logical Channel
RSSI	Received Signal Strength Indication
RTP	Real-Time Transport Protocol
RU	Remote RF Unit
RUpd	Registration Update Message
SAP	Service Access Point Conceptual point at the interface between two adjacent layers where services are provided to the upper layer and data and protocol information is exchanged between layers.
SAR	Segmentation and Reassembly
SCCH	Supplemental Code Channel
SCCP	Signaling Connection Control Protocol
SCH	Supplemental Channel
SDU	Selection and Distribution Unit
SEU	Sector Expansion Unit
SIGTRAN	Signaling Transport processing module in IP-BSC
Slotted Mode	An operation mode of the mobile station in which the mobile station monitors only selected slots on the Paging Channel
SMS	Short Message Service
SMV	Selectable Mode VOCODER
SRBP	Signaling Radio Burst Protocol. An entity that provides connectionless protocol for Signaling messages.
SRU	Sector Reduction Unit
SS	Soft Switch
STS	Space Time Spreading
Sync Channel	A code channel in the Forward CDMA Channel which transports the synchronization message to the mobile station
TCC	Traffic Channel Control Block
TCE	Traffic Channel Element
TCM	Traffic Control Module in BTS
TCP	Transmission Control Protocol
TOD	Time of Day
TP	Traffic processing and Path Control module in IP-BSC
TPTL	Transmit Power Tracking Loop
UART	Universal Asynchronous Receiver/Transmitter
UDP	User Datagram Protocol

Acronym	Description
VSWR	Voltage Standing Wave Ratio
XCV	Base Station Transceiver Control Block
XCVR	Transceiver Board

12 Appendix B - Site preparation checklist

AW-Series IP-RAN Site Preparation Check List for:	*{Customer Name}*

ITEM #	Description	Site Prep Guide Section #	Date Complete	Com plete	Information
1	Customer Contact & Equipment location	1			
a.	Main Contact Customer	1.1.1			
b.	Other Customer Contacts	1.1.2			
	1. Power contact	1.1.2			
	2. Communications Facilities Contact	1.1.2			
	3. LAN Facilities Contact	1.1.2			
	4. MSC Security Contact	1.1.2			
c.	Complete Customer Questions Appendix C	App. C			
2	AirWalk Series IP-RAN Site Requirements	2.1			
a.	Space requirements	2.1.1			
b.	AirWalk Series IP-RAN placement Diagram	2.1.2			
c.	Installation Location for AirWalk Series IP-RAN Equipment	2.1.2.1			
3	Complete Site Drawings Appendix B	App. B			

ITEM #	Description	Site Prep Guide Section #	Date Complete	Com plete	Information
	Power requirements	2.1.3			
a.	Location				
b.	Voltage				
c.	Amps				
d.	Connector				
	Security	2.1.3			
a.	MSC Equipment Room security				
b.	MSC Equipment room access				
	Communications Facilities	2.1.3			
a.	Number of T1 circuits				
	Connector				
	Location				
	LAN Facilities	2.1.3			
a.	Location				
b.	Connector				
c.	Carrier Network IP Address				
d.	AirWalk Series IP-RAN Component IP Addresses				
	Other Information				

ITEM #	Description	Site Prep Guide Section #	Date Complete	Com plete	Information
a.	Heat dissipation				
b.	Environmental specifications	2.1.4			
c.	Ambient temperature and humidity	2.1.4.2			
d.	Dust density	2.1.4.4			
e.	Altitude	2.1.4.5			
f.	Air conditioning	2.1.4.6			
g.	Fire protection				

13 Appendix C - Installation Checklist

AW-Series IP-RAN Site Installation Check List for:	*{Customer Name}*	
Address	**Installer Name (s)**	**Customer Contact (s)**
{AW-SERIES IP-RAN Installation Address}		

ITEM #	Description	Install Manual Section	Date Complete	Time	Customer Contact Initials	Installer Initials
1	Verify Customer Contact & Equipment location	9.1.1				
2	Contact Customer	9.1.1.1				
3	Locate AW-SERIES IP-RAN Equipment	9.1.1.2				
4	Locate and verify Floor Space	9.1.1.3				
5	Uncrate and arrange for packing material disposal	9.1.2				
6	Verify location of all distribution points (main and intermediate)	9.1.3				
7	Power Check	9.1.3.1				
8	Power Location	9.1.3.1.1				
9	Verify Connector	9.1.3.1.2				
10	Voltage	9.1.3.1.3				
11	Amps	9.1.3.1.4				
12	LAN Facilities check	9.1.3.1.5				
13	Location	9.1.5.1.5				
14	Verify IP Address	9.1.3.1.5				
15	Verify Connector	9.1.3.1.5				
16	Ping IP Address	9.1.3.1.5				

ITEM #	Description	Install Manual Section	Date Complete	Time	Customer Contact Initials	Installer Initials
17	Prepare IP addressable device diagram	9.1.3.1.5				
18	Post IP diagram at: i) site; ii) customer; iii) Airwalk Customer Service	9.1.3.1.5				
19	Install AW-SERIES IP-RAN Cabinet	9.2.1				
20	Move AW-SERIES IP-RAN to location	9.2.1				
21	Secure AW-SERIES IP-RAN in designated location	9.2.1				
22	Verify all internal System connections	9.2.2				
23	External System Connections	9.2.3				
MAKE SURE ALL SYSTEM POWER SUPPLIES ARE TURNED OFF BEFORE PROCEEDING! ! !						
24	Connect Power to Cabinet	9.2.4				
25	Connect -48VDC to DC distribution panel (If applicable)	9.2.4				
26	Connect 120-240 VAC to AC distribution panel (If applicable)	9.2.4				
27	Connect Communications Facilities	9.2.5				
28	Connect LAN Facilities to BSC	9.2.5				
29	Connect LAN Facilities to BTS	9.2.5				
30	Power-up procedure	9.2.6				
31	Power-up Main cabinet/rack power, check LEDs	9.2.6.1				
32	Complete any configuration options	9.2.6.2				
	System Certification Tests	9.3.2				
33	Test Case #1 - Image/PLD loading	9.3.2.1				
34	Test Case #2 – System Check	9.3.2.2				
35	Test Case #3 – Tx check	9.3.2.3				
36	Test Case #4 – Output power	9.3.2.4				
37	Test Case #5 – GPS Check	9.3.2.5				
38	Test Case #6 – BTS Alarm Check	9.3.2.6				
39	Test Case #7 – System Reset	9.3.2.7				
40	Test Case #8 – PN Check	9.3.2.8				

ITEM #	Description	Install Manual Section	Date Complete	Time	Customer Contact Initials	Installer Initials
41	Test Case #9 – System Interface Check	9.3.2.9				
	Operation Tests	9.3.3				
42	Test Case #1 – Voice Calls	9.3.3.1				
43	Test Case #2 – Data Calls	9.3.3.2				
44	Operator Specific Tests (If Required)	10.3.4				
	Site Clean Up & Documentation					
45	Dispose of all packing material	10.4.1				
46	Clean-up site	10.4.2				
47	Update Installation Checklist	10.4.3				
48	Get Customer Signature on Certification Document	10.4.4				

14 Appendix D - Customer Certification Document

Date

Subject:

The subject AW-SERIES IP-RAN has been certified to be up and running today.

_____ _____

AirWalk Communications, Inc. (Installation Team) Date

_____ _____

Authorized Carrier Representative Date

This Page Marks End Of Document