ECOSeries

Instruction Manual

ARC
ADVANCED RADIOTECH CORPORATION

Service Information

Your New Radio Remote Control System

Thank you for your purchase of ARC Flex ECO radio remote control system. Without a doubt, our Flex ECO system is the ultimate solution for providing precise, undeterred, and safe control of your material.

If your product ever needs modification or service, please contact our representative in your country or at the following location:

World Headquarter:

Advanced Radiotech Corporation
288-1, Hsin Ya Road, Chien Chen District
Kaohsiung, Taiwan

Telephone:

+886 7 812 8112

Fax Number:

+886 7 812 8119

Website:

www.advanced-radiotech.com

E-mails:

info@advanced-radiotech.com

sales@advanced-radiotech.com

All rights reserved. This notice applies to all copyrighted materials included with this product, including, but not limited to, this manual and software embodied within the product. This manual is intended for the sole use of the person(s) to whom it was provided, and any unauthorized distribution of the manual or dispersal of its contents is strictly forbidden. This manual may not be reproduced in whole or in part by any means whatsoever without the expressed written permission of ARC.

PRODUCT MANUAL SAFETY INFORMATION

Advanced Radiotech Corporation (ARC) offers a broad range of radio remote control product for material handling applications. This manual has been prepared by ARC to provide information and recommendations for the installation, use, operation and service of ARC's material handling products and systems (ARC Products). Anyone who uses, operates, maintains, services, installs or owns ARC Products should know, understand, and follow the instructions and safety recommendations in this manual for ARC Products.

The recommendations in this manual do not take precedence over any of the following requirements relating to cranes, hoists lifting devices or other material handling equipment which use or include ARC Products:

- Instructions, manuals, and safety warnings of the manufacturers of the equipment where the radio system is used.
- Plant safety rules and procedures of the employers and the owners of facilities where the ARC Products are being used.
- Safety standards and practices for the industries in which ARC Products are used.

This manual does not include or address the specific instructions and safety warnings of these manufacturers or any of the other requirements listed above. It is the responsibility of the owners, users and operators of the ARC Products to know, understand and follow all of these requirements. It is the responsibility of the employer to make its employees aware of all of the above listed requirements and to make certain that all operators are properly trained. **No one should use ARC Products prior to becoming familiar with and being trained in these requirements and the instructions and safety recommendations in this manual**.

WARRANTY INFORMATION

For information on ARC's product warranties, please contact ARC representative nearest to you or visit www.advanced-radiotech.com.

FCC WARNINGS and CAUTIONS

NOTE: This equipment has been tested and found to comply with the limits for a Class B digital device, pursuant to part 15 of the FCC Rules. These limits are designed to provide reasonable protection against harmful interference in a residential installation. This equipment generates, uses and can radiate radio frequency energy and, if not installed and used in accordance with the instructions, may cause harmful interference to radio communications. However, there is no guarantee that interference will not occur in a particular installation. If this equipment does cause harmful interference to radio or television reception, which can be determined by turning the equipment off and on, the user is encouraged to try to correct the interference by one or more of the following measures:

— Reorient or relocate the receiving antenna.
— Increase the separation between the equipment and receiver.
— Connect the equipment into an outlet on a circuit different from that to which the receiver is connected.
— Consult the dealer or an experienced radio/TV technician for help.

RADIO FREQUENCY INTERFERENCE STATEMENT

This device complies with Part 15 of the FCC rules. Operation is subject to the following two conditions:

1) this device may not cause harmful interference, and

2) this device must accept any interference received, including interference that may cause undesired operation.

FCC Caution: Any change or modification not expressly approved by the party responsible for compliance could void the user's authority to operate this equipment.

Table of Contents

		Page
1.	**Introduction**	4
2.	**Radio Controlled Safety**	5
3.	**General System Information**	
	3.1 Transmitter	
	3.1.1 External Illustration	9
	3.1.2 Internal Illustration	10
	3.2 Receiver	
	3.2.1 External Illustration	11
	3.2.2 Internal Illustration	12
4.	**Function Settings**	
	4.1 Transmitter	
	4.1.1 Enter Function Setting Mode	13
	4.1.2 Channel Settings	13
	4.1.3 Remote Pairing	14
	4.1.4 Start Function Settings	15
	4.1.5 Inactivity Timer Settings	15
	4.1.6 Infrared Programming	15
	4.1.7 Pushbutton Function Settings	16
	4.2 Receiver	
	4.2.1 Channel Settings	18
	4.2.2 Output Relay Configurations	18
	4.2.3 Dipswitch Settings	22
	4.2.4 Jumper Settings	24
	4.2.5 Voltage Settings	25
	4.2.6 Lights Indicator and Buzzer Installation	25
	4.2.7 System Channels Table	26
5.	**Receiver Installation**	
	5.1 Output Relay Contact Diagrams	27
	5.2 Pre-installation Precautions	28
	5.3 Step-By-Step Installation	28
6.	**Operating Procedures**	
	6.1 General Operation	31
	6.2 A/B Pushbutton Select Operation	32
	6.3 A/B Rotary Select Operation	32
	6.4 Pitch & Catch Operation	32
	6.5 Changing Batteries	32
	6.6 System Status Light Indications	33
7.	**General Specifications**	35
8.	**EU Declaration of Conformity**	36

1. Introduction

The **Flex ECO** radio remote control systems are designed for control of industrial equipment and machinery such as overhead traveling cranes, jib cranes, gantry cranes, tower cranes, electric hoists, winches, monorails, conveyor belts, mining equipment, and other material handling equipment where wireless control is preferred.

Each **Flex ECO** system consists of a transmitter handset and a receiver unit. Other standard-equipped accessories include transmitter lanyard, belt clip, clear vinyl pouch, pushbutton labels, output cable, and instruction manual.

List of notable features include:

* 62 user-programmable channels – advanced synthesized RF controls with 62 built-in programmable channels.
* Wireless remote pairing function – system pairing can be done easily and wirelessly.
* Over one million unique ID codes (20bit) – each and every Flex ECO system has its own unique ID codes and serial number, never repeats.
* Advanced controls – the Flex ECO system utilizes advanced microprocessor controls with 32bit CRC and Hamming Code, which provide ultra fast, safe, precise, and error-free encoding and decoding.
* Dual-way communication – transmitter and receiver communicates with one another for safe, precise and uninterrupted operation.
* Reliable pushbuttons – the pushbuttons are rated for more than five million press cycles.
* Low power consumption – requires only two “AA” Alkaline batteries for more than 150 hours of operation between replacements.
* Ultra-durable nylon and fiberglass composite enclosures – highly resistance to breakage and deformation even in the most abusive environments. The receiver enclosures and output cables are UL94-V0 rated.
* Fully sealed enclosures – the transmitter and receiver enclosures are IP66 rated.
* Full compliance – all systems are fully complied with the FCC Part-15 Rules and European Safety Standards.
* Other optional accessories and features – transmitter magnet mount, transmitter waist belt, 2 and 3-position rotary select switch, transmitter rubber guards, miniature indicator lights and buzzer, dual-crane tandem function, multi-crane random access function, and many others.

2. Radio Controlled Safety

WARNINGS and CAUTIONS

Throughout this document WARNING and CAUTION statements have been deliberately placed to highlight items critical to the protection of personnel and equipment.

WARNING – A warning highlights an essential operating or maintenance procedure, practice, etc. which if not strictly observed, could result in injury or death of personnel, or long term physical hazards. Warnings are highlighted as shown below:

WARNING

CAUTION – A caution highlights an essential operating or maintenance procedure, practice, etc. which if not strictly observed, could result in damage to, or destruction of equipment, or loss of functional effectiveness. Cautions are highlighted as shown below:

CAUTION

WARNINGS and CAUTIONS SHOULD NEVER BE DISREGARDED.

The safety rules in this section are not intended to replace any rules or regulations of any applicable local, state, or federal governing organizations. Always follow your local lockout and tagout procedure when maintaining any radio equipment. The following information is intended to be used in conjunction with other rules or regulations already in existence. It is important to read all of the safety information contained in this section before installing or operating the Radio Control System.

2.1 CRITICAL INSTALLATION CONSIDERATIONS

WARNING

PRIOR TO INSTALLATION AND OPERATION OF THIS EQUIPMENT, READ AND DEVELOP AN UNDERSTANDING OF THE CONTENTS OF THIS MANUAL AND THE OPERATION MANUAL OF THE EQUIPMENT OR DEVICE TO WHICH THIS EQUIPMENT WILL BE INTERFACED. FAILURE TO FOLLOW THIS WARNING COULD RESULT IN SERIOUS INJURY OR DEATH AND DAMAGE TO EQUIPMENT.

ALL EQUIPMENT MUST HAVE A MAINLINE CONTACTOR INSTALLED AND ALL TRACKED CRANES, HOISTS, LIFTING DEVICES AND SIMILAR EQUIPMENT MUST HAVE A BRAKE INSTALLED. FAILURE TO FOLLOW THIS WARNING COULD RESULT IN SERIOUS INJURY OR DEATH AND DAMAGE TO EQUIPMENT.

AN AUDIBLE AND/OR VISUAL WARNING MEANS MUST BE PROVIDED ON ALL REMOTE CONTROLLED EQUIPMENT AS REQUIRED BY CODE, REGULATION, OR INDUSTRY STANDARD. THESE AUDIBLE AND/OR VISUAL WARNING DEVICES MUST MEET ALL GOVERNMENTAL REQUIREMENTS. FAILURE TO FOLLOW THIS WARNING COULD RESULT IN SERIOUS INJURY OR DEATH AND DAMAGE TO EQUIPMENT.

FOLLOW YOUR LOCAL LOCKOUT TAGOUT PROCEDURE BEFORE MAINTAINING ANY REMOTE CONTROLLED EQUIPMENT. ALWAYS REMOVE ALL ELECTRICAL POWER FROM THE CRANE, HOIST, LIFTING DEVICE OR SIMILAR EQUIPMENT BEFORE ATTEMPTING ANY INSTALLATION PROCEDURES. DE-ENERGIZE AND TAGOUT ALL SOURCES OF ELECTRICAL POWER BEFORE TOUCH-TESTING ANY EQUIPMENT. FAILURE TO FOLLOW THIS WARNING COULD RESULT IN SERIOUS INJURY OR DEATH AND DAMAGE TO EQUIPMENT.

THE DIRECT OUTPUTS OF THIS PRODUCT ARE NOT DESIGNED TO INTERFACE DIRECTLY TO TWO STATE SAFETY CRITICAL MAINTAINED FUNCTIONS, I.E., MAGNETS, VACUUM LIFTS, PUMPS, EMERGENCY EQUIPMENT, ETC. A MECHANICALLY LOCKING INTERMEDIATE RELAY SYSTEM WITH SEPARATE POWER CONSIDERATIONS MUST BE PROVIDED. FAILURE TO FOLLOW THIS WARNING COULD RESULT IN SERIOUS INJURY OR DEATH OR DAMAGE TO EQUIPMENT.

2.2 GENERAL

Radio controlled material handling equipment operates in several directions. Cranes, hoists, lifting devices and other material handling equipment can be large, and operate at high speeds. Quite frequently, the equipment is operated in areas where people are working in close proximity to the material handling equipment. **The operator must exercise extreme caution at all times**. Workers must constantly be alert to avoid accidents. The following recommendations have been included to indicate how careful and thoughtful actions may prevent injuries, damage to equipment, or even save a life.

2.3 PERSONS AUTHORIZED TO OPERATE RADIO CONTROLLED CRANES

Only properly trained persons designated by management should be permitted to operate radio controlled equipment.

Radio controlled cranes, hoists, lifting devices and other material handling equipment should not be operated by any person who cannot read or understand signs, notices and operating instructions that pertain to the equipment.

Radio controlled equipment should not be operated by any person with insufficient eyesight or hearing or by any person who may be suffering from a disorder or illness, is taking any medication that may cause loss of equipment control, or is under the influence of alcohol or drugs.

2.4 SAFETY INFORMATION AND RECOMMENDED TRAINING FOR RADIO CONTROLLED EQUIPMENT OPERATORS

Anyone being trained to operate radio controlled equipment should possess as a minimum the following knowledge and skills before using the radio controlled equipment.

The operator should:

- have knowledge of hazards pertaining to equipment operation
- have knowledge of safety rules for radio controlled equipment
- have the ability to judge distance of moving objects
- know how to properly test prior to operation
- be trained in the safe operation of the radio transmitter as it pertains to the crane, hoist, lifting device or other material handling equipment being operated
- have knowledge of the use of equipment warning lights and alarms
- have knowledge of the proper storage space for a radio control transmitter when not in use
- be trained in transferring a radio control transmitter to another person
- be trained how and when to report unsafe or unusual operating conditions
- test the transmitter emergency stop and all warning devices prior to operation; testing should be done on each shift, without a load
- be thoroughly trained and knowledgeable in proper and safe operation of the crane, hoist, lifting device, or other material handling equipment that utilizes the radio control
- know how to keep the operator and other people clear of lifted loads and to avoid “pinch” points
- continuously watch and monitor status of lifted loads
- know and follow cable and hook inspection procedures
- know and follow the local lockout and tagout procedures when servicing radio controlled equipment
- know and follow all applicable operating and maintenance manuals, safety procedures, regulatory requirements, and industry standards and codes

The operator shall not:

- lift or move more than the rated load
- operate the material handling equipment if the direction of travel or function engaged does not agree with what is indicated on the controller
- use the crane, hoist or lifting device to lift, support or transport people
- lift or carry any loads over people
- operate the crane, hoist or lifting device unless all persons, including the operator, are and remain clear of the supported load and any potential pinch points
- operate a crane, hoist or lifting device when the device is not centered over the load
- operate a crane, hoist or lifting device if the chain or wire rope is not seated properly in the sprockets, drum or sheave
- operate any damaged or malfunctioning crane, hoist, lifting device or other material handling equipment

- change any settings or controls without authorization and proper training
- remove or obscure any warning or safety labels or tags
- leave any load unattended while lifted
- leave power on the radio controlled equipment when the equipment is not in operation
- operate any material handling equipment using a damaged controller because the unit may be unsafe
- operate manual motions with other than manual power
- operate radio controlled equipment when low battery indicator is on

WARNING

THE OPERATOR SHOULD NOT ATTEMPT TO REPAIR ANY RADIO CONTROLLER. IF ANY PRODUCT PERFORMANCE OR SAFETY CONCERNS ARE OBSERVED, THE EQUIPMENT SHOULD IMMEDIATELY BE TAKEN OUT OF SERVICE AND BE REPORTED TO THE SUPERVISOR. DAMAGED AND INOPERABLE RADIO CONTROLLER EQUIPMENT SHOULD BE RETURNED TO MAGNETEK FOR EVALUATION AND REPAIR. FAILURE TO FOLLOW THIS WARNING COULD RESULT IN SERIOUS INJURY OR DEATH AND DAMAGE TO EQUIPMENT.

2.5 TRANSMITTER UNIT

Transmitter switches should never be mechanically blocked ON or OFF. When not in use, the operator should turn the transmitter OFF. A secure storage space should be provided for the transmitter unit, and the transmitter unit should always be placed there when not in use. This precaution will help prevent unauthorized people from operating the material handling equipment.

Spare transmitters should be stored in a secure storage space and only removed from the storage space after the current transmitter in use has been turned OFF, taken out of the service area and secured.

2.6 PRE-OPERATION TEST

At the start of each work shift, or when a new operator takes control of the crane, operators should do, as a minimum, the following steps before making lifts with any crane or hoist:

Test all warning devices.

Test all direction and speed controls.

Test the transmitter emergency stop.

2.7 BATTERIES

WARNING

KNOW AND FOLLOW PROPER BATTERY HANDLING, CHARGING AND DISPOSAL PROCEDURES. IMPROPER BATTERY PROCEDURES CAN CAUSE BATTERIES TO EXPLODE OR DO OTHER SERIOUS DAMAGE. FAILURE TO FOLLOW THIS WARNING COULD RESULT IN SERIOUS INJURY OR DEATH AND DAMAGE TO EQUIPMENT.

3. General System Information

3.1 Transmitter

3.1.1 External Illustration

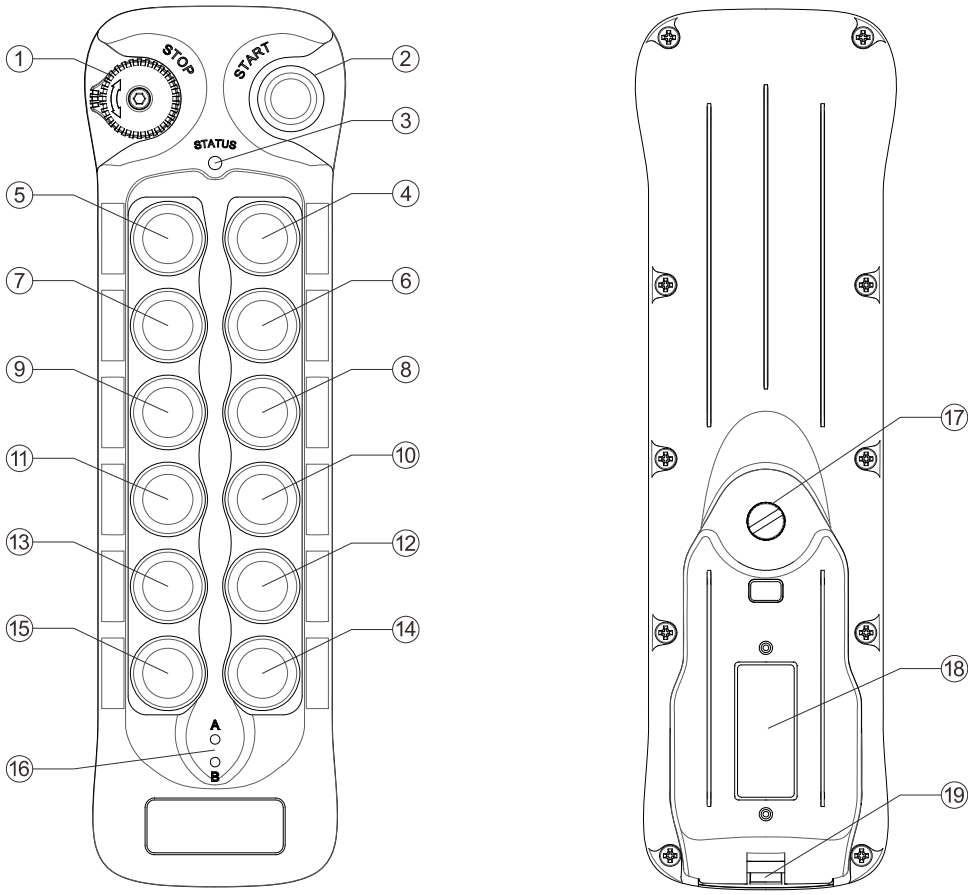

1.	STOP Button	11.	Pushbutton 8 (PB8)
2.	START Button	12.	Pushbutton 9 (PB9)
3.	Status LED Indicator	13.	Pushbutton 10 (PB10)
4.	Pushbutton 1 (PB1)	14.	Pushbutton 11 (PB11)
5.	Pushbutton 2 (PB2)	15.	Pushbutton 12 (PB12)
6.	Pushbutton 3 (PB3)	16.	A/B LED Indicators
7.	Pushbutton 4 (PB4)	17.	Battery Cover Screw
8.	Pushbutton 5 (PB5)	18.	System Information
9.	Pushbutton 6 (PB6)	19.	Lanyard and Waist Belt Attachment
10.	Pushbutton 7 (PB7)		

3.1.2 Internal Illustration

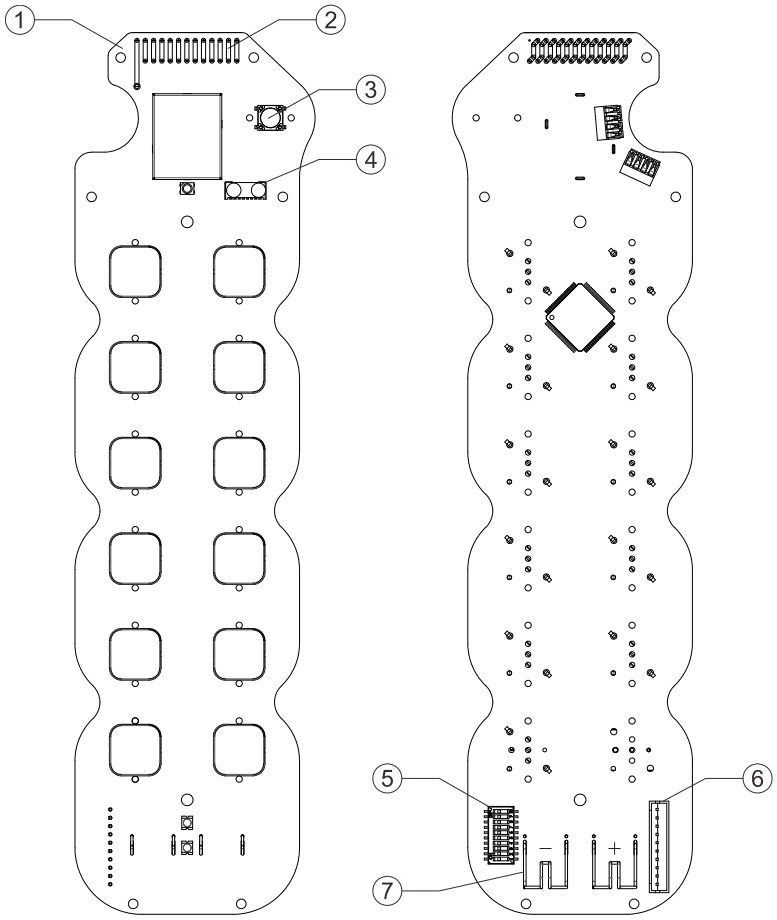

1.	RF/Encoder Board	5.	Function Dipswitch
2.	Antenna	6.	Programming Port
3.	START Button	7.	Battery Contacts
4.	Infrared Sensors		

3.2 Receiver

3.2.1 External Illustration

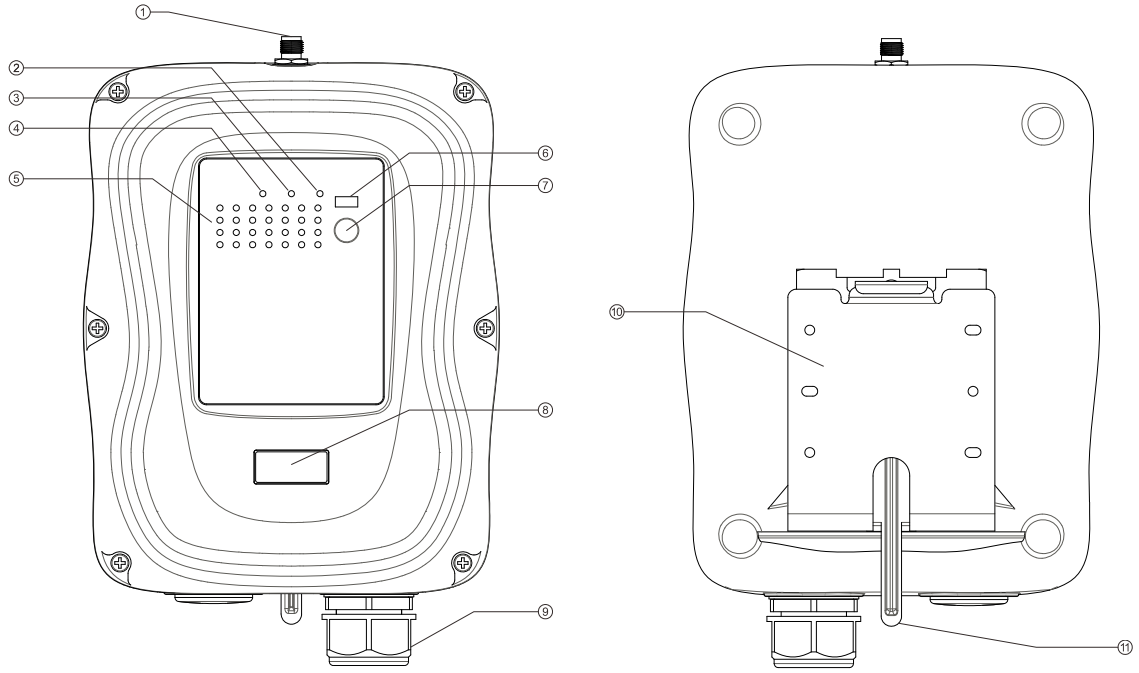

1.	External Antenna Port (optional)	7.	Remote Pairing Button
2.	COM LED Indicator	8.	System Information
3.	Status LED Indicator	9.	Cord Grip
4.	Power LED Indicator	10.	Mounting Bracket
5.	Output Relay LED Indicators	11.	Mounting Bracket Release
6.	Infrared Sensor		

3.2.2 Internal Illustration

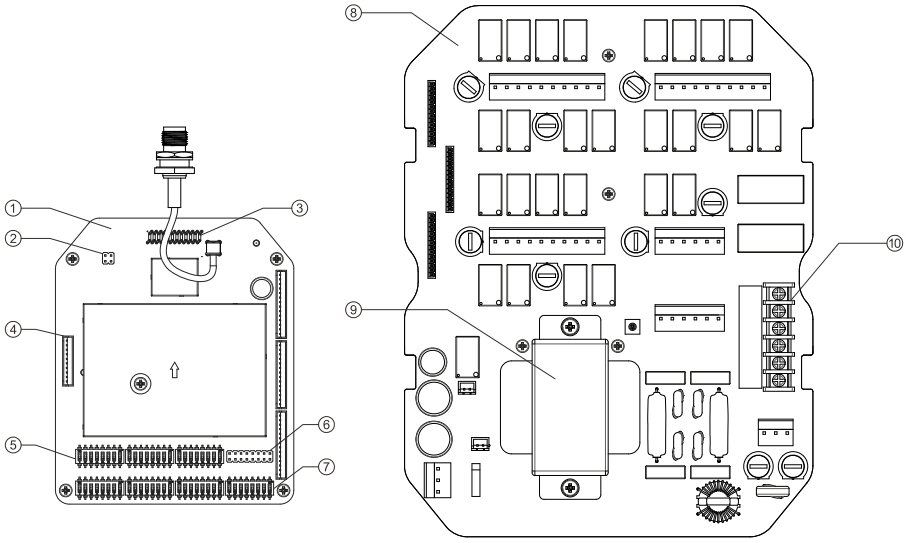

1.	RF/Decoder Board	6.	Function Jumpers
2.	INT/EXT Antenna Jumpers	7.	Channel Dipswitch
3.	Internal Antenna	8.	AC Line Filter/Relay Board
4.	Programming Port	9.	Power Transformer
5.	Function Dipswitches	10.	Voltage Selector

4. Function Settings

4.1 Transmitter

4.1.1 Enter Function Setting Mode

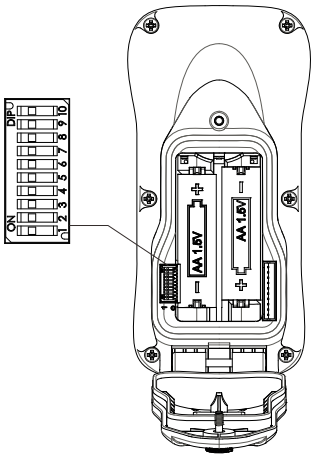

1) Press down the STOP button.
2) Open the battery cover.
3) Set dip position #10 to “1” or ON position.
4) Reset the STOP button (transmitter power on).
5) Entered Function Setting Mode.
6) Status LED displays firmware version.

4.1.2 Channel Settings

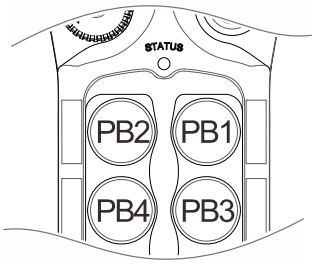

1) After entering the Function Setting Mode (refer to section 4.1.1 Enter Function Setting Mode).
2) Press and hold PB3 for up to 1 second to enter the Channel Setting Mode (Status LED blinks orange).
3) Release PB3 (Status LED displays current channel). A green blink represents the tens (+10) and a red blink represents the units (+1). For example, 1 green blink followed by 5 red blinks is channel 15.
4) Press PB1 to increment the units (+1) and PB2 to increment the tens (+10). For example, press PB2 two times and then PB1 four times is channel 24. When finished the transmitter Status LED will display the newly selected channel.
5) Transfer the newly selected transmitter channel to the receiver by press and hold PB3 for up to 10 seconds or until the Status LED turns off; the transferring process is completed. Make sure the receiver power is turned on during the entire process. **Skip step 5 if changing receiver channel is not required or needed.**
6) Exit Function Setting Mode by pressing down the STOP button and set the dip position #10 back to “0” or OFF position.
7) Reset the STOP button and then press the START button to resume operation.

Note : *When selecting a new channel make sure each button press do not exceed 3 seconds.*

Important Note:

Step 5 illustrated above is strictly required if you are changing the entire system channel (both transmitter and receiver). If you exit the Channel Setting Mode without pressing PB3 for up to 10 seconds to transfer the newly selected channel to the receiver then the system channel will no longer match (new transmitter channel vs. old receiver channel). In this case you would have to change the newly selected transmitter channel back to its previous setting by reentering the Function Setting Mode and then press and hold PB1 and PB3 at the same time for up to 2 seconds; this will reset the newly selected transmitter channel back to its previous setting. Or perform section 4.1.3 Receiver-to-Transmitter Pairing process; this will transfer the receiver channel to the transmitter. Then repeat the channel setting process if you would like to select a new channel.

4.1.3 Remote Pairing

A. Transmitter-to-Transmitter Pairing:

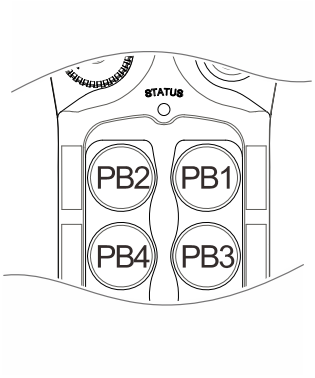

1) After entering the Function Setting Mode (refer to section 4.1.1 Enter Function Setting Mode).
2) Press and hold both PB3 and PB4 for up to 1 second (Status LED blinks orange).
3) Release PB3 and PB4 (Status LED turns off).
4) Entered Remote Pairing Mode.
5) Output data (original transmitter) by press and hold PB3 (Status LED blinks green).
6) Receive data (new transmitter) by press and hold PB4 (Status LED blinks green).
7) When the Status LED (receiving data end) turns to constant green while both pushbuttons are still pressed down the pairing is completed.
8) Exit Function Setting Mode by pressing down the STOP button and set the dip position #10 back to “0” or OFF position.
9) Reset the STOP button and then press the START button to resume operation.

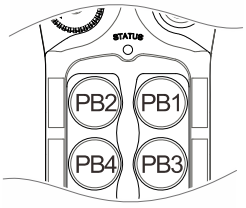

Output data – original transmitter
(press and hold PB3)

→

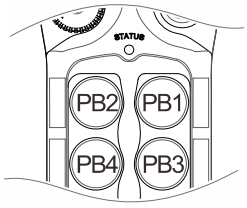

Receive data – new transmitter
(press and hold PB4)

B. Receiver-to-Transmitter Pairing:

JP8 Open Method: After entering the Remote Pairing Mode, output receiver data by press and hold the Pairing button located on the receiver cover and receive data by press and hold PB4 on the transmitter, both at the same time. When the transmitter Status LED turns to constant green while both pushbuttons are still pressed down the pairing is completed.

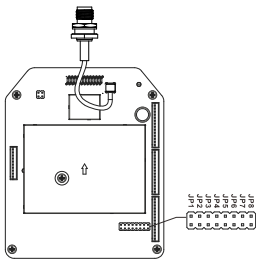

Set JP8 to “Open”

→

Output data - receiver
(Press and hold the Pairing button)

→

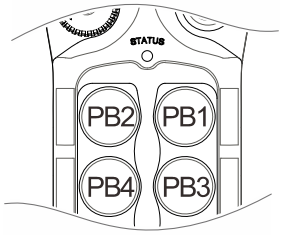

Receiving data – transmitter
(Press and hold PB4)

JP8 Short Method (wireless pairing): After entering the Remote Pairing Mode, press PB1 on the transmitter one time and then press and hold PB3 for up to 6 seconds. The Status LED blinks green when PB3 is pressed. Release PB3 when Status LED turns off the pairing is completed. Make sure the pairing process is executed within a distance of 10 meters from one another.

4.1.4 Start Function Settings

When transmitter goes into sleep mode (MAIN relays deactivated) press the START button or any pushbutton to wake up the system (MAIN relays reactivated).

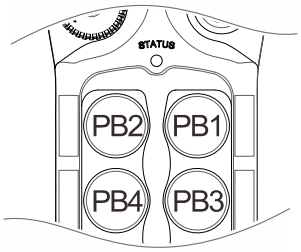

1) After entering the Function Setting Mode (refer to section 4.1.1 Enter Function Setting Mode).
2) Press PB4 for up to 1 second (Status LED orange).
3) Release PB4 (Status LED with 1 or 2 red blinks).
4) Entered Start Function Mode.
5) Press PB1 to toggle between “START” button and “ANY” pushbutton reactivation.

   ** START button reactivation → 2 red blinks*

   ** ANY pushbutton reactivation → 1 red blink.*
6) Exit Function Setting Mode by pressing down the STOP button and set the dip position #10 back to “0” or OFF position.
7) Reset the STOP button and then press the START button to resume operation.

Note : *When selecting a new setting make sure each button press do not exceed 3 seconds.*

4.1.5 Inactivity Timer Settings

Set how long the system enters the sleep mode after transmitter inactivity (pushbutton not pressed).

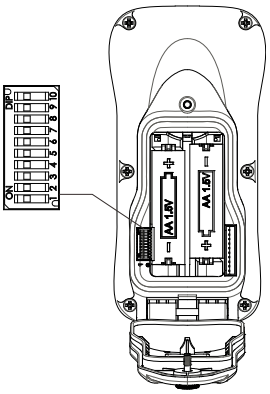

1) Press down the STOP button.
2) Open the battery cover.
3) Set dip position #9 to “0” or OFF for 1 minute.
4) Set dip position #9 to “1” or ON for 3 minutes.
5) Please contact ARC representative if your application requires a different timer value other than 1 and 3 minutes.

4.1.6 Infrared Programming

Functions not listed in this manual can be programmed via the infrared programmer unit, such as the system serial number, system channel, transmitter output power, Function output relay settings, etc… Please contact ARC representative in your country for more details.

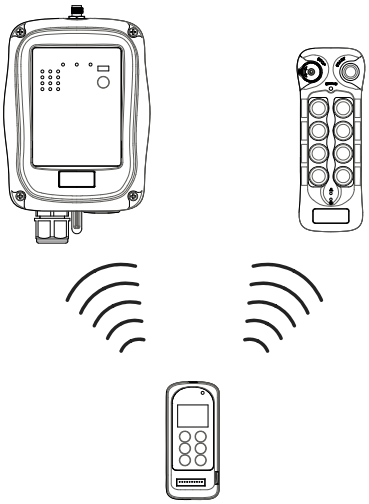

4.1.7 Pushbutton Function Settings

4.1.7.1 Toggled Pushbutton with LED Indication – Standard Right/Left Pushbutton Configuration

Set pushbutton toggled function (latching output relay) by configuring the 10-position function dipswitch located inside the battery compartment. The “LED A” and “LED B” shown inside the shaded boxes illustrates which LED on the transmitter will light up when the designated pushbutton is pressed (PB11 & PB12).

	DIP	PB9	PB10	PB11	PB12
1	0000011100	Normal	Normal	LED A	Normal
2	0000100000	Normal	Normal	Normal	LED B
3	0000100100	Normal	Normal	LED A	LED B

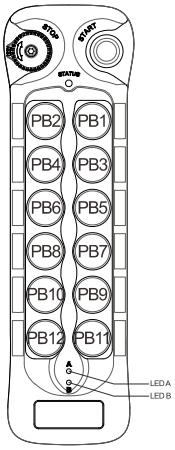

** PB9…PB12 → Pushbutton number.*

** Normal → Normal momentary contact.*

** LED A & LED B → Pushbutton toggled function with designated LED indication.*

4.1.7.2 A/B Pushbutton Select with LED Indication – Standard Right/ Left Pushbutton Configuration

There are 4 different types of A/B selector sequence available. Choose one that is most suitable for your application. Refer to section 5.1 output relay connections.

Type-A selector sequence : A → B

Type-B selector sequence : Off → A → B

Type-C selector sequence : A → B → A+B

Type-D selector sequence : Off → A → B → A+B

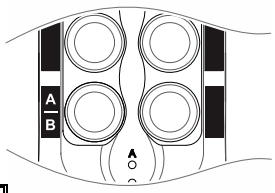

	DIP	PB9	PB10	PB11	PB12
1	0001101000	Normal	Normal	A/1&2	Normal
2	0001101100	Normal	Normal	B/1&2	Normal
3	0001110000	Normal	Normal	C/1&2	Normal
4	0001110100	Normal	Normal	D/1&2	Normal
5	0001111000	Normal	Normal	Normal	A/1&2
6	0001111100	Normal	Normal	Normal	B/1&2
7	0010000000	Normal	Normal	Normal	C/1&2
8	0010000100	Normal	Normal	Normal	D/1&2

** PB9…PB12 → Pushbutton number.*

** Normal → Normal momentary contact.*

** A/1&2 ~ D/1&2 → A/B pushbutton select function with designated LED indication.*

4.1.7.3 Toggled Pushbutton with LED Indication – Inline Top/Bottom Pushbutton Configuration

Set pushbutton toggled function (latching output relay) by configuring the 10-position function dipswitch located inside the battery compartment. The “LED A” and “LED B” shown inside the shaded box illustrates which LED on the transmitter will light up when the designated pushbutton is pressed (PB11 & PB12). Refer to section 4.2.4 JP4/JP5 inline jumper settings.

	DIP	PB9	PB10	PB11	PB12
1	1001101000	Normal	Normal	LED A	Normal
2	0000100000	Normal	Normal	Normal	LED B
3	1001101100	Normal	Normal	LED A	LED B

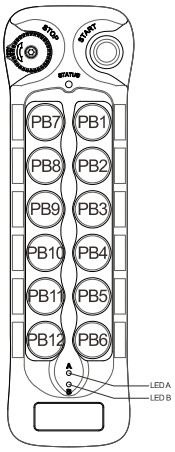

** PB9…PB12 → Pushbutton number.*

** Normal → Normal momentary contact.*

** LED A & LED B → Pushbutton toggled function with designated LED indication.*

4.1.7.4 A/B Pushbutton Select with LED Indication – Inline Top/Bottom Pushbutton Configuration

There are 4 different types of A/B selector sequence available. Choose one that is most suitable for your application. Refer to section 4.2.4 JP4/JP5 inline jumper settings and section 5.1 output relay connections.

Type-A selector sequence : A → B

Type-B selector sequence : Off → A → B

Type-C selector sequence : A → B → A+B

Type-D selector sequence : Off → A → B → A+B

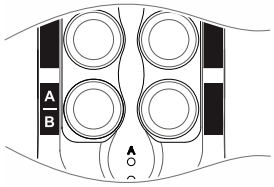

	DIP	PB9	PB10	PB11	PB12
1	1010010000	Normal	Normal	A/1&2	Normal
2	1010010100	Normal	Normal	B/1&2	Normal
3	1010011000	Normal	Normal	C/1&2	Normal
4	1010011100	Normal	Normal	D/1&2	Normal
5	0001111000	Normal	Normal	Normal	A/1&2
6	0001111100	Normal	Normal	Normal	B/1&2
7	0010000000	Normal	Normal	Normal	C/1&2
8	0010000100	Normal	Normal	Normal	D/1&2

** PB9…PB12 → Pushbutton number.*

** Normal → Normal momentary contact.*

** A/1&2 ~ D/1&2 → A/B pushbutton select function with designated LED indication.*

4.2 Receiver

4.2.1 Channel Settings

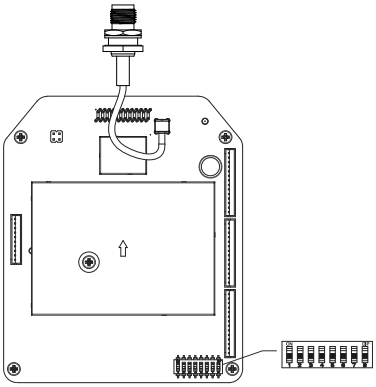

Set the receiver channel by configuring the channel dipswitch located on the RF/decoder board, only the first 6 dip positions are used for channel programming. The system channels table on section 4.2.7 illustrates which dipswitch setting corresponds to which channel. Once the receiver channel is altered do make sure to change the transmitter channel as well. The channel on both transmitter and receiver must be identical in order for the system to work (refer to section 4.1.2 Transmitter Channel Settings).

Example:

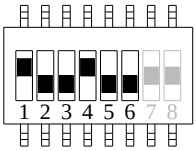

Top position → "1"
Bottom position → "0"

*The above dipswitch setting **"1 0 0 1 0 0"** corresponds to "channel 36" in the system channels table on section 4.2.7.*

4.2.2 Output Relay Configurations

4.2.2.1 Output Relay Types

1. **2 output relays per motion – single speed only**
   Output relays with Forward (F) and Reverse (R) speed.

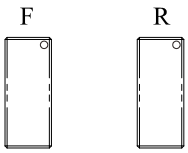

2. **3 output relays per motion – shared 2nd speed output relay**
   Output relays with Forward 1st speed (F1), Reverse 1st speed (R1) and Forward/Reverse 2nd speed (F/R2). Forward and Reverse 2nd speed (F/R2) shared the same output relay.

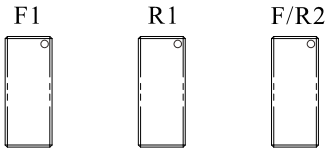

3. **4 output relays per motion – separate 1st and 2nd speed output relays**
   Output relays with Forward 1st speed (F1), Reverse 1st speed (R1), Forward 2nd speed (F2) and Reverse 2nd speed (R2). Forward and Reverse 2nd speed with separate output relays.

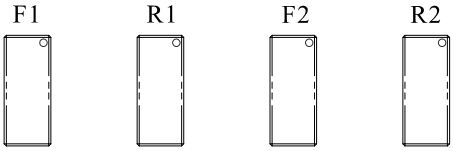

4.2.2.2 Output Relay Actions at 2nd Speed (Flex ECO 12X only)

1. **3 output relays configuration with Closed/Closed contact at 2nd speed**
   At 2nd speed, both 1st speed (F1 or R1) and 2nd speed (F/R2) output relays are closed. Refer to section 4.2.3.1 on how to set to this function.

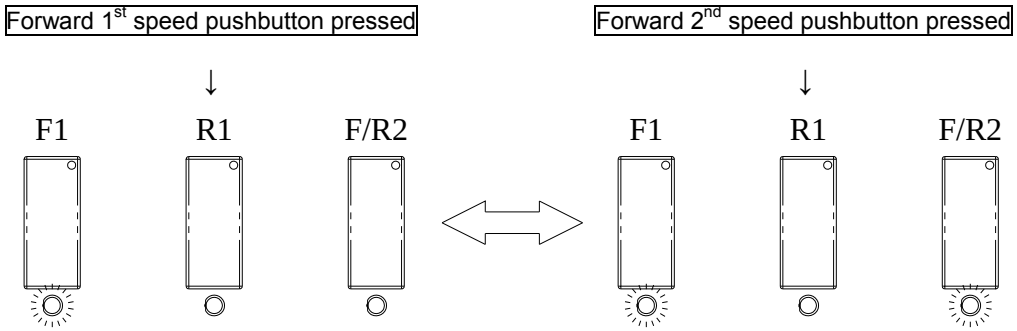

2. **4 output relays configuration with Opened/Closed contact at 2nd speed**
   At 2nd speed, only the 2nd speed (F2 or R2) output relay is closed. Refer to section 4.2.3.1 on how to set to this function.

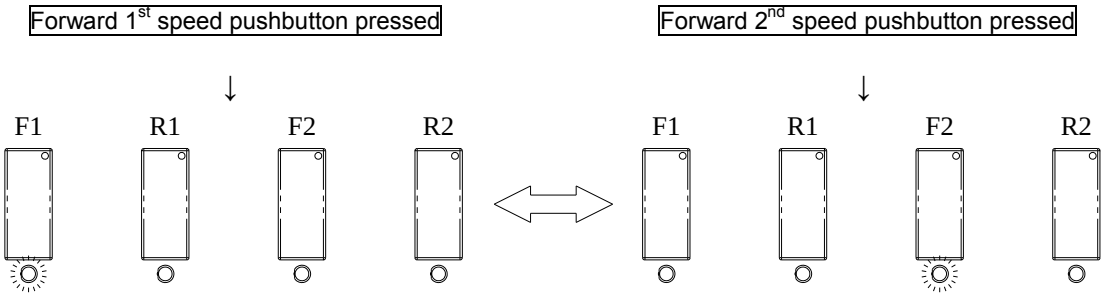

3. **4 output relays configuration with Closed/Closed contact at 2nd speed**
   At 2nd speed, both 1st speed (F1 or R1) and 2nd speed (F2 or R2) output relays are closed. Refer to section 4.2.3.1 on how to set to this function.

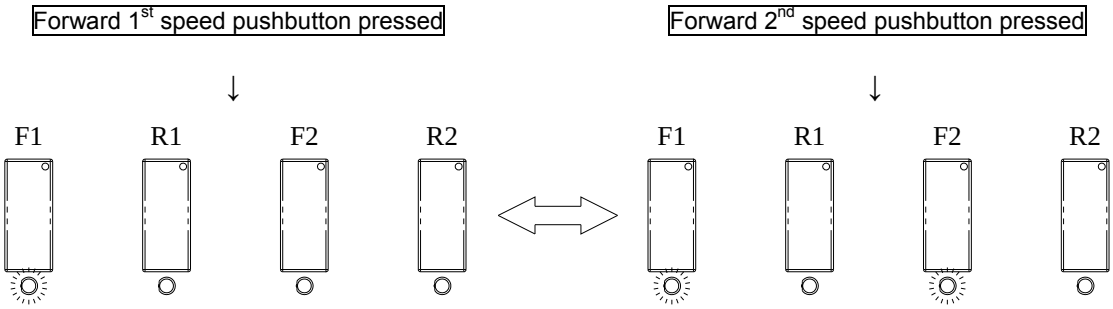

4.2.2.3 START + AUX Function

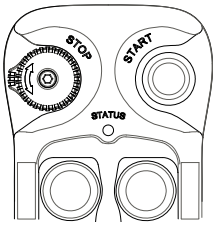

After initiating the START function at transmitter startup the same START button becomes an auxiliary function with momentary contact connected through K25 Function output relay. There are other types of auxiliary functions made available for K25 and K26 Function output relays. Please contact ARC representative if your application requires other types of auxiliary function connected to these Function output relays.

4.2.2.4 ON/OFF Pushbutton Function

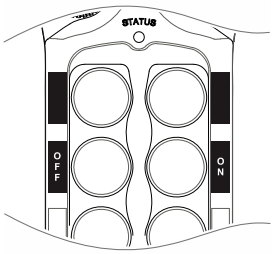

The user can set any of the two adjacent pushbuttons on the transmitter to behave like a mechanical ON & OFF rocker or toggle switch. ON output relay closes when ON pushbutton is pressed (OFF output relay opens) and OFF output relay closes when OFF pushbutton is pressed (ON output relay opens). Refer to section 4.2.3.1 on how to set to this function.

4.2.2.5 Magnet ON/OFF Pushbutton Function

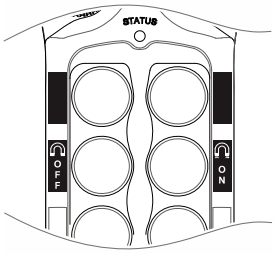

The user can set any of the two adjacent pushbuttons on the transmitter to control industrial magnet left. Activate the magnet by pressing the Magnet ON pushbutton. Deactivate the magnet by first press and hold the Magnet ON pushbutton and then press the Magnet OFF pushbutton. Pressing the Magnet OFF pushbutton alone is unable to deactivate the magnet. Refer to section 4.2.3.1 on how to set to this function.

4.2.2.6 Brake Function (Flex ECO 12X only)

When the transmitter pushbutton is released from 2nd speed up to 1st speed, both 1st and 2nd speed output relays will open for up to 1 second and then with 1st speed output relay closed thereafter. Refer to section 4.2.3.1 on how to set to this function.

4.2.2.7 External Warning Function

The user can install an external warning device (rotating lights, horn, etc…) to the K26 Function output relay (or to K30 Function output relay, refer to section 4.2.6) located inside the receiver. The user can choose which pushbutton pair (or pairs) triggers the external warning device when pressed. Refer to section 4.2.3.1 on how to set to this function.

4.2.2.8 Momentary Contact

When pushbutton is released the corresponding output relay will open or deactivate. This type of relay action is usually applies to external applications such as horn and buzzer. Refer to section 4.2.3.2 on how to set to this function.

4.2.2.9 Toggled Contact

When pushbutton is released the corresponding output relay will maintained contact or closure until next time the user presses the same pushbutton again. This type of relay action is usually applies to external application such as lights. Refer to section 4.2.3.2 on how to set to this function.

4.2.2.10 Acceleration Function

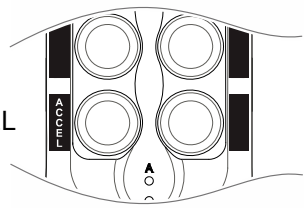

This function allows the crane or equipment to travel beyond 2nd speed. For example, while the operator press and hold the “UP” pushbutton at 2nd speed, pressing the ACCEL pushbutton one time will trigger the 3rd speed, press the ACCEL pushbutton again will revert back to the 2nd speed. Refer to section 4.2.3.2 on how to set to this function.

4.2.2.11 Auxiliary STOP Function

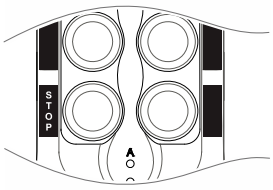

The auxiliary STOP function acts as a 2nd emergency stop button. When pressed, the receiver MAIN relays are deactivated (refer to section 4.2.3.2 on how to set to this function). When set to this function the Start Function on section 4.1.4 must set to "START" button reactivation.

4.2.2.12 Pitch & Catch Function

This function allows two operators controlling a crane, hoist or equipment from opposite ends of the facility. When set to "Pitch & Catch" make sure the 2nd transmitter is set to the next upper channel (channel X+1). For example, if the original (1st) transmitter and receiver are set to channel 01 then the newly added 2nd transmitter must set to channel 02 (all with same serial number). Furthermore, the Channel dipswitch position #7 and #8 on the RF/decoding board in the receiver must set to "10" for 2-channel scanning (scans channel 01 and 02). Refer to section 4.2.2.13 and 4.2.3.2 on how to set to this function.

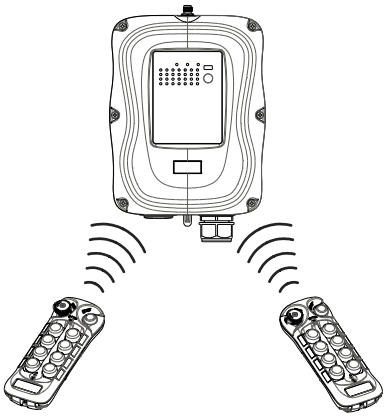

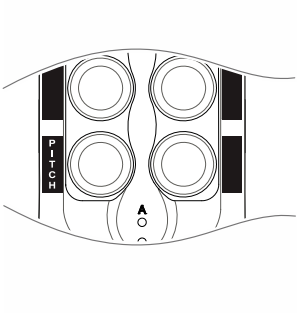

4.2.2.13 Receiver Channel Scanning Function

(1) 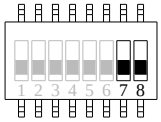

→ "00" manufacture preset (channel X)

(2) 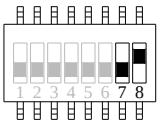

→ "01" scans 2 channels (channel X and channel X+1)

(3) 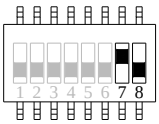

→ "10" scans 3 channels (channel X… channel X+2)

(4) 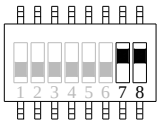

→ "11" scans 4 channels (channel X… channel X+3)

** Channel X → channel set on the Channel dipswitch*

Example: *If the first 6 dipswitch positions are set to channel 01 (000001), when set to 2-channel scanning (type-2 above) the receiver will only scan channel 01 and 02.*

4.2.3 Dipswitch Settings

4.2.3.1 Interlocked Pushbutton Pair

Interlocked means the pushbutton pair can not be activated at the same time, as it will cancel each other out. Interlocked settings are usually applied to electric motors with forward/reverse motion and On & Off switches. Each dipswitch on the RF/decoder board corresponds to a pushbutton pair.

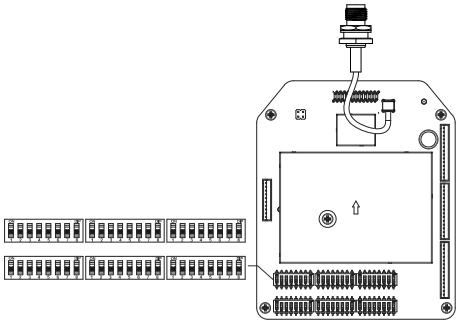

Dip Settings	Function Descriptions	# of Relays Used
00000000	Single speed (F2, R2 and F/R2 relays not used)	2
00000010	Closed / Closed relay action at 2nd speed (separate 2nd speed relay)	4
00000100	Closed / Closed relay action at 2nd speed (shared 2nd speed relay)	3
00000110	Opened / Closed relay action at 2nd speed (separate 2nd speed relay)	4
00001100	On (right button) & Off (left button)	2
00010010	On + Start / Off + Start - For added safety, you must first press and hold the START button and then press the On or Off pushbutton to activate the output relay.	2
00001110	Magnet Left On & Off	2
00010100	FWD / REV toggled (latching)	2
00100000	Single speed + External Warning*	2
00100010	Closed / Closed relay action + External Warning*	4
00100100	Closed / Closed relay action + External Warning*	3
00100110	Opened / Closed relay action + External Warning*	4
01000010	Closed / Closed relay action + Brake	4
01000100	Closed / Closed relay action + Brake	3
01000110	Opened/ Closed relay action + Brake	4
01100010	Closed / Closed relay action + Brake + External Warning*	4
01100100	Closed / Closed relay action + Brake + External Warning*	3
01100110	Opened / Closed relay action + Brake + External Warning*	4

* *External warning function requires installing an external warning device such as horn and lights to K26 Function output relay, or to K30 Function relay using the in-house designed miniature lights and buzzer illustrated on section 4.2.6.*

4.2.3.2 None-Interlocked Pushbutton Pair

Non-interlocked settings allow the pushbutton pair be used at the same time. Non-interlocked settings are usually applied to crane's or equipment's auxiliary functions such as lights, horn or buzzer. Each dipswitch on the RF/decoder board corresponds to a pushbutton pair. Only the first 7 dipswitch positions are used (counting from left to right), the 8th dipswitch position (far right) is not used.

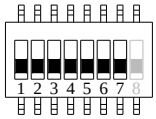

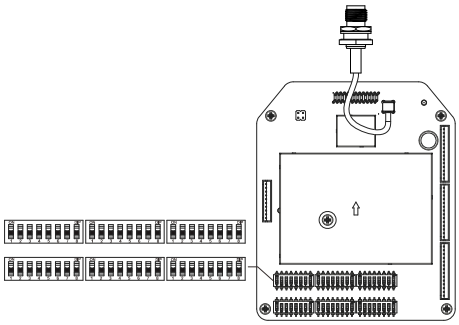

Function Code	Dip Position #1	Dip Position #2~#4 (left button) & #5~#7 (right button)	Function Description
A	1	000	Normal (momentary) contact
B	1	001	Toggled (latching) contact
C	1	010	Acceleration (3rd speed)
D	1	100	Normal + Start function - For added safety, you must first press and hold the START button and then press the intended pushbutton to activate the output relay.
E	1	110	Pitch & Catch
F	1	111	Auxiliary Stop

Example #1: Left button (set to function code A) / right button (set to function code B) → **1 000 001**

Example #2: Left button (set to function code C) / right button (set to function code D) → **1 010 100**

4.2.4 Jumper Settings

Jumper settings are applied to functions such as the Start function, transmitter standard right/left or inline pushbutton configurations, firmware version, system testing and remote pairing function.

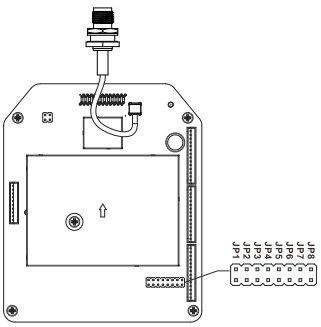

Jumper Settings		Function
JP3 (Opened)		**Standard A/B selector sequence** - Output relay A activated at A position, output relay B activated at B position, both relays activated at A+B position.
JP3 (Inserted)		**Reversed logic A/B selector sequence** - Output relay B activated at A position, output relay A activated at B position, both relays deactivated at A+B position.
JP4 (Opened)	JP5 (Opened)	Standard right/left pushbutton configuration.
JP4 (Inserted)	JP5 (Opened)	Inline top/bottom pushbutton configuration for PB1 to PB8.
JP4 (Opened)	JP5 (Inserted)	Inline top/bottom pushbutton configuration for PB1 to PB12.
JP4 (Inserted)	JP5 (Inserted)	Inline top/bottom pushbutton configuration for PB1 to PB4.
JP6 (Inserted)		System firmware version.
JP7 (Inserted)		For system testing only, receiver MAIN relays disabled.
JP8 (Blank)		Receiver-to-transmitter remote pairing. (requiring pressing the PAIRING button on receiver)
JP8 (Inserted)		Receiver-to-transmitter remote pairing. (do not require pressing the PAIRING button on receiver)

4.2.5 Voltage Settings

Prior to installation always check the voltage setting is correct for your application.

Position 1 → 110~120VAC

Position 2 → 220~240VAC

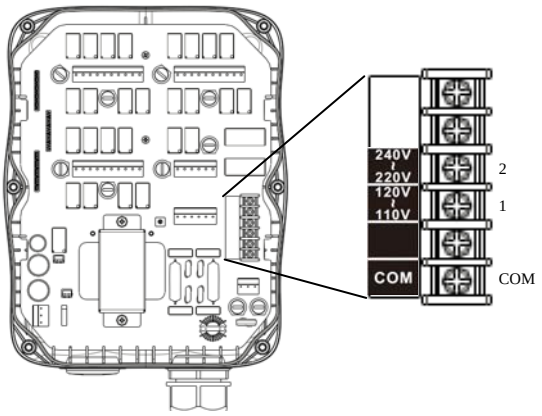

FUSE #	110~120VAC	220~240VAC
F3 ~ F10	5.0A	5.0A
F1 ~ F2	0.5A	0.5A

4.2.6 Lights Indicator and Buzzer Installation

In-house designed miniature lights indicator and buzzer can be easily fitted onto the receiver enclosure. The lights indicator or buzzer works simultaneously with the receiver MAIN relays (manufacture preset). When receiver MAIN relays are activated the lights indicator or buzzer is also activated, and vise versa. Make sure the lights indicator or the buzzer is connected to the K30 Function output relay CN11 port located on the AC line filter/relay board inside the receiver. Please contact ARC representative if you would like the lights indicator or the buzzer work differently than described above.

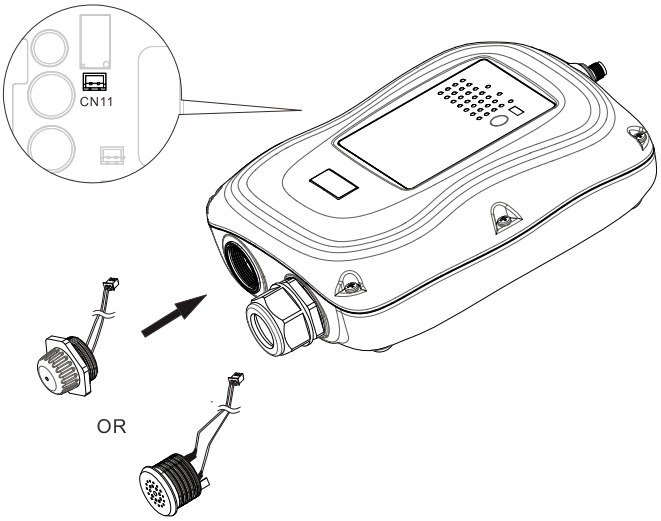

4.2.7 System Channels Table

Channel	Frequency	Dipswitch Setting	Channel	Frequency	Dipswitch Setting
01	433.050MHZ	000001	**32**	433.825MHZ	100000
02	433.075MHZ	000010	**33**	433.850MHZ	100001
03	433.100MHZ	000011	**34**	433.875MHZ	100010
04	433.125MHZ	000100	**35**	433.900MHZ	100011
05	433.150MHZ	000101	**36**	433.925MHZ	100100
06	433.175MHZ	000110	**37**	433.950MHZ	100101
07	433.200MHZ	000111	**38**	433.975MHZ	100110
08	433.225MHZ	001000	**39**	434.000MHZ	100111
09	433.250MHZ	001001	**40**	434.025MHZ	101000
10	433.275MHZ	001010	**41**	434.050MHZ	101001
11	433.300MHZ	001011	**42**	434.075MHZ	101010
12	433.325MHZ	001100	**43**	434.100MHZ	101011
13	433.350MHZ	001101	**44**	434.125MHZ	101100
14	433.375MHZ	001110	**45**	434.150MHZ	101101
15	433.400MHZ	001111	**46**	434.175MHZ	101110
16	433.425MHZ	010000	**47**	434.200MHZ	101111
17	433.450MHZ	010001	**48**	434.225MHZ	110000
18	433.475MHZ	010010	**49**	434.250MHZ	110001
19	433.500MHZ	010011	**50**	434.275MHZ	110010
20	433.525MHZ	010100	**51**	434.300MHZ	110011
21	433.550MHZ	010101	**52**	434.325MHZ	110100
22	433.575MHZ	010110	**53**	434.350MHZ	110101
23	433.600MHZ	010111	**54**	434.375MHZ	110110
24	433.625MHZ	011000	**55**	434.400MHZ	110111
25	433.650MHZ	011001	**56**	434.425MHZ	111000
26	433.675MHZ	011010	**57**	434.450MHZ	111001
27	433.700MHZ	011011	**58**	434.475MHZ	111010
28	433.725MHZ	011100	**59**	434.500MHZ	111011
29	433.750MHZ	011101	**60**	434.525MHZ	111100
30	433.775MHZ	011110	**61**	434.550MHZ	111101
31	433.800MHZ	011111	**62**	434.575MHZ	111110

5. Receiver Installation

5.1 Output Relay Contact Diagrams

Flex ECO 12S (single speed model)

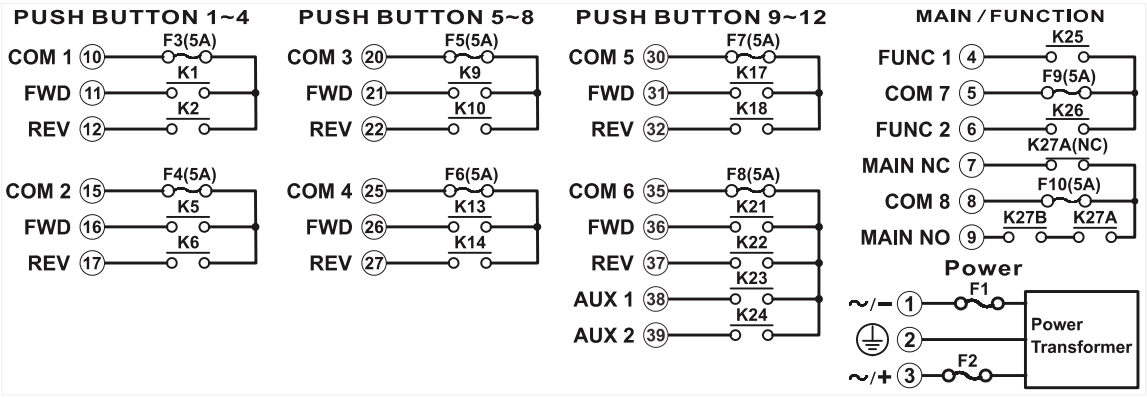

Flex ECO 12X (dual speed model)

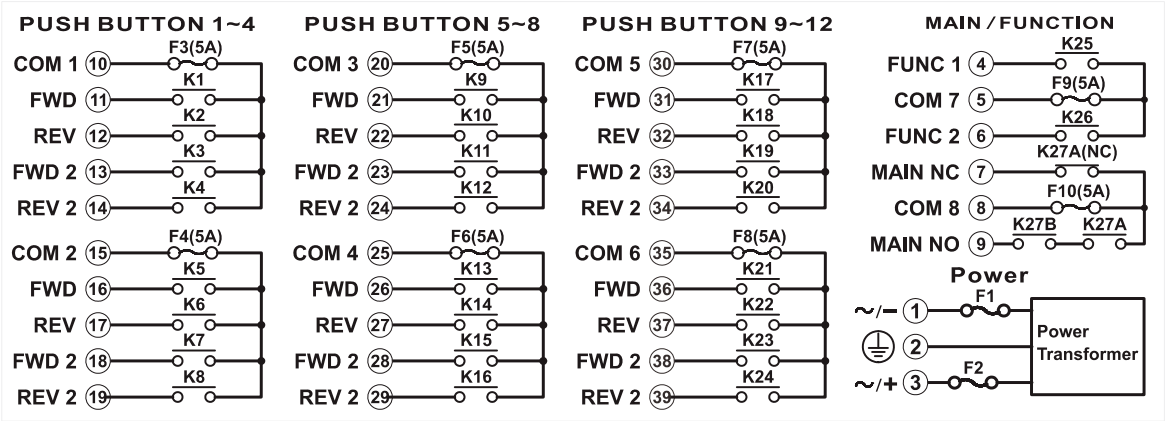

* *For 9~36VDC power supply, wire #1 corresponds to the negative charge (-) and wire #3 corresponds to the positive charge (+), wire #2 is GROUND.*

* *If PB11 (or PB12) is set to A/B pushbutton select or A/B rotary switch select function, output A connects to K21 (or K22), output B connects to K23 (or K24). Refer to section 4.1.7.2 on how to set to this function.*

5.2 Pre-installation Precautions

1. Make sure the transmitter and receiver are with identical serial number and channel.
2. Make sure the receiver is not set to the same channel as any other systems in use in the surrounding area.
3. Make sure the crane or equipment is working properly prior to installation.
4. Make sure the power source to the receiver is set correctly.
5. Switch off the main power source to the crane or equipment prior to installation.

5.3 Step-By-Step Installation

Mounting Bracket Type 1

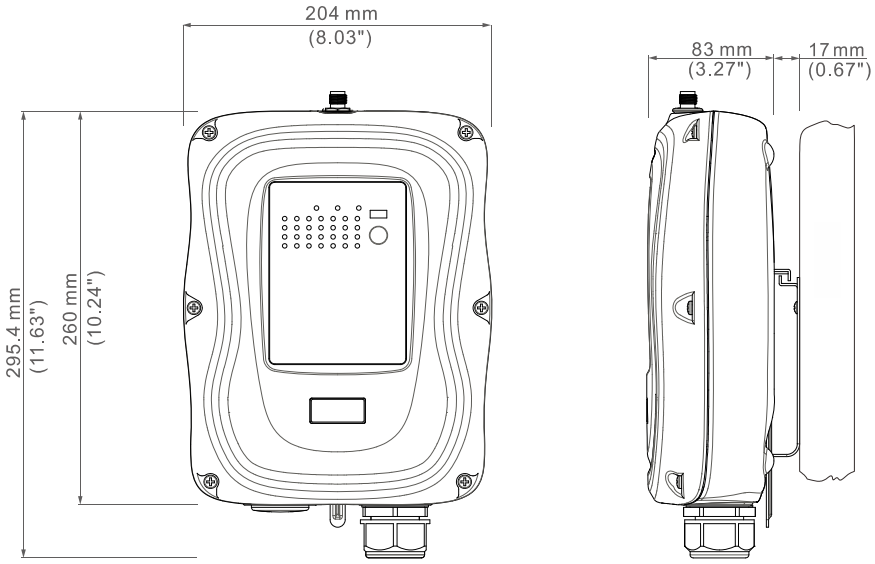

Mounting Bracket Type 2

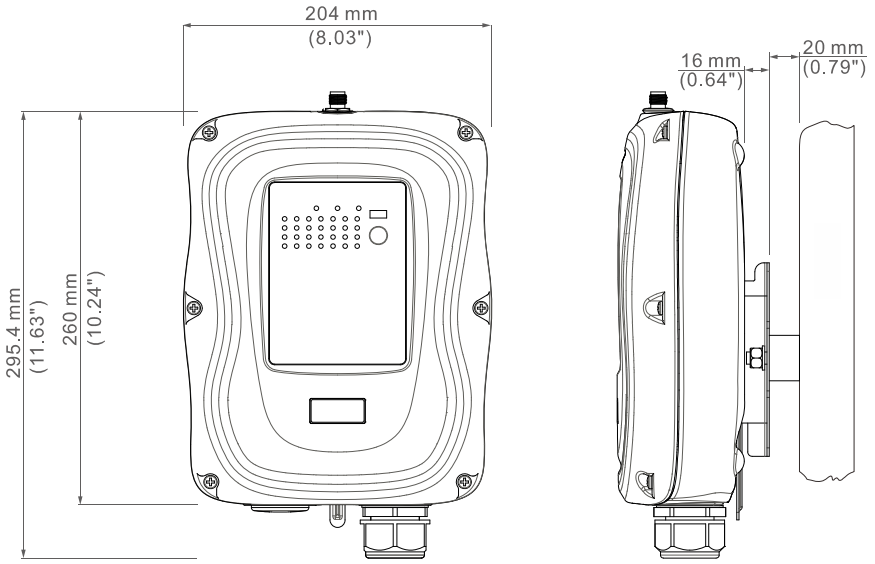

1. For best reception the location of the receiver should be visible to the operator at all time.
2. The location selected should not be exposed to high levels of electric noise. Mounting the receiver next to an unshielded variable frequency drive may cause radio interference. Always locate the receiver as far away from variable frequency drive and electric motor as possible.
3. Ensure the selected location has adequate space to accommodate the receiver. If an external antenna is used, to avoid the possibility of antenna damage always locate the receiver where the antenna is free from any obstacles.
4. When installing an external antenna make sure the SMA jack located on the RF/decoder board inside the receiver is connected and jumper set to “EXT” position.

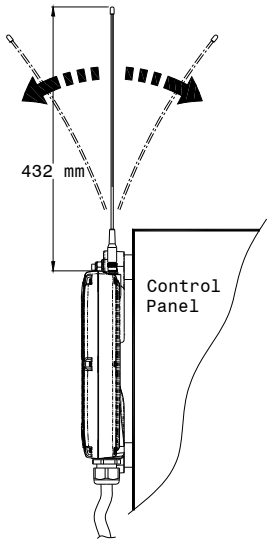

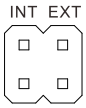

5. For better reception, make sure the receiver is in an upright position.
6. Drill four holes for mounting bracket type 1 and two holes for mounting bracket type 2 on the control panel, wall or location where the receiver is to be installed.
7. Make sure the screws, bolts or shock absorbers are tightened after installation (not provided with the system).

Mounting Bracket Type 1

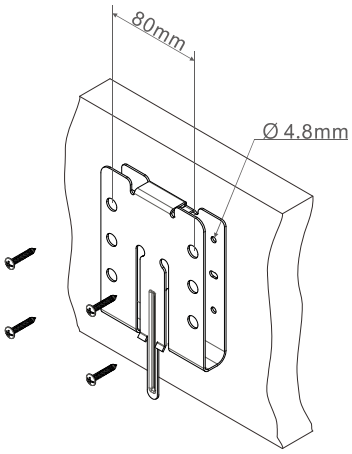

Mounting Bracket Type 2

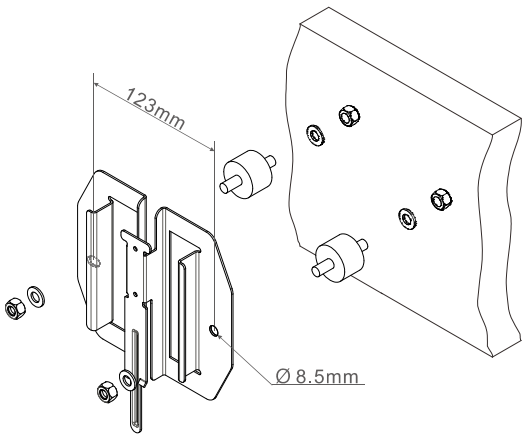

8. Slide down the receiver along the guided track to secure the receiver to the mounting bracket.
9. Remove the receiver by pressing down the bracket release and pull the receiver upward until it clears the guided track.

Install

Mounting Bracket Type 1

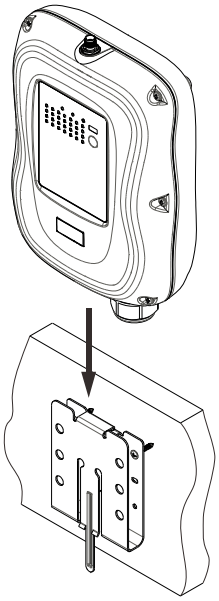

Mounting Bracket Type 2

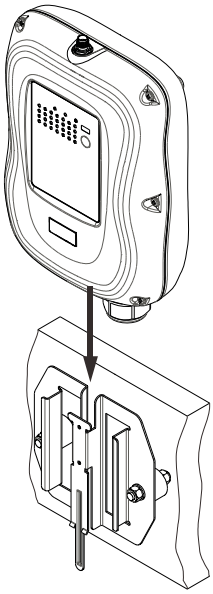

Remove

Mounting Bracket Type 1

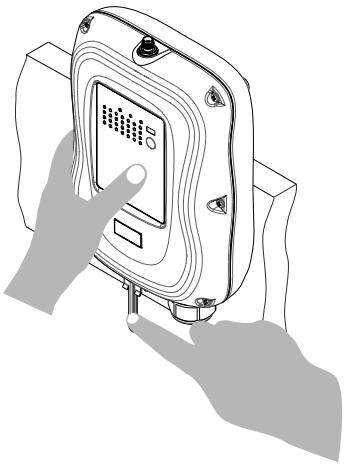

Mounting Bracket Type 2

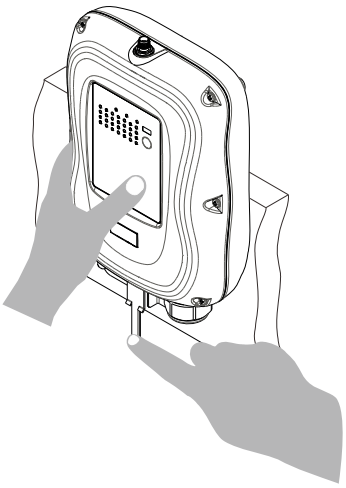

6. Operating Procedures

6.1 General Operation

a. Reset the STOP button located on the top left hand corner of the transmitter by rotating it clockwise or counter clockwise, the button will pop up. Transmitter is powered on when the STOP button is elevated.

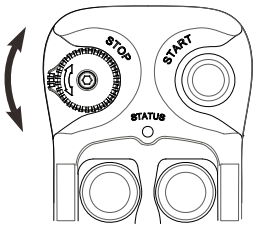

b. After turning on the transmitter power, check the Status LED on the transmitter for any sign of system irregularities (refer to section 6.6.1 Transmitter Status Indications). If the transmitter is in good working order the Status LED will blink green for up to 2 seconds at startup (no faults detected).

c. Press the START button for up to 1 second to activate the receiver MAIN relays. The same START button becomes an auxiliary function thereafter (refer to section 4.2.2.3 START + AUX Function). Then press any pushbutton on the transmitter to begin operation. Pressing any pushbutton prior to initiating the START command at startup will result in no signals transmitted (Status LED blinks orange).

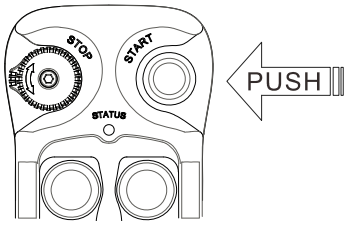

d. In case of an emergency, press down the STOP button to disconnect the receiver MAIN relays and as well as the transmitter power. To resume operation, rotate the STOP button clockwise or counter-clockwise, it will pop up. Then press the START button for up to 1 second to reconnect the receiver MAIN relays. For safety, pressing the START button is strictly required every time when the transmitter is turned on or after every STOP button reset.

e. After 1 minute or 3 minutes of inactivity (pushbutton not pressed) the receiver MAIN relays are temporarily disconnected (refer to section 4.1.5 Inactivity Timer Settings). Press any pushbutton or the START button to resume operation (refer to section 4.1.4 Start Function Settings). The receiver MAIN relays are also temporarily disconnected when the system encounters strong radio interference, dead spots, low battery condition, and system out of operating range.

f. Turn off the transmitter power by pressing down the STOP button, it will disconnect the transmitter power and the receiver MAIN relays altogether.

6.2 A/B Pushbutton Select Operation

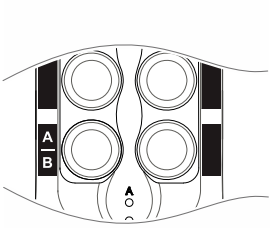

Press the “A/B” pushbutton repeatedly toggles between output relay A, B and A+B respectively. There are 4 different types of Select A/B sequence available (refer to section 4.1.7.2).

Standard – Output relay A activated at A position, output relay B activated at B position, both output relays activated at A+B position.

Reversed logic - Output relay A activated at B position, output relay B activated at A position, both output relays deactivated at A+B position. Refer to section 4.2.4 JP3 jumper settings.

6.3 A/B Rotary Select Operation

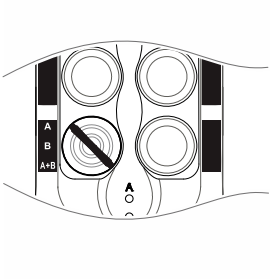

Standard - Rotate to A position activates output relay A, rotate to B position activates output relay B, rotate to A+B position activates both output relays.

Reversed logic - Rotate to A position activates output relay B, rotate to B position activates output relay A, rotate to A+B position deactivates both output relays. Refer to section 4.2.4 JP3 jumper setting.

6.4 Pitch & Catch Operation

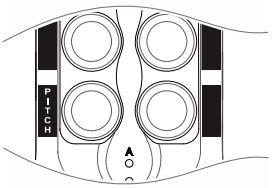

Press the “PITCH” pushbutton for up to 2 seconds to release control of the receiver. Press the START button for up to 1 second to gain control of the receiver. The 2nd operator is unable to take control of the receiver unless the 1st operator presses the “PITCH” pushbutton. Refer to section 4.2.2.12 and section 4.2.3.2 on how to set to this function.

6.5 Changing Batteries

Changing transmitter batteries (“AA” alkaline battery x 2) by unscrewing the battery cover located on the backside of the transmitter. During battery installation make sure the batteries are installed correctly, with “+” to “+” charge and “–” to “–” charge. Also make sure the screw is tightened after battery installation to avoid water, moisture, dirt, grease, and other liquid penetration.

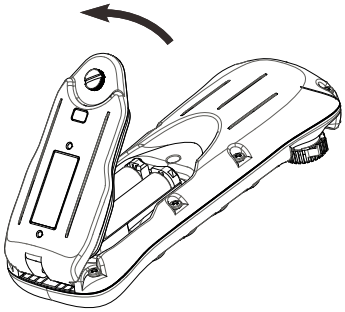

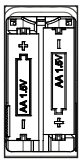

6.6 System Status Light Indications

6.6.1 Transmitter Status Indications

Type	Display Type	Indication
1	Constant red	Voltage below 1.9V at initial power on. Transmitter power and receiver MAIN relays shuts off.
		Voltage below 1.8V during operation. Transmitter power and receiver MAIN relays shuts off.
2	1 red blink followed by a 2-second pause	Voltage below 1.85V during operation. Change batteries suggested.
3	2 red blinks followed by a 2-second pause	Defective or jammed pushbutton detected at initial power on.
4	No light displayed	When defective pushbutton condition occurs (2 red blinks, type 3 above), find out which pushbutton is defective by pressing all of them one at a time. If the pushbutton is in good working order when pressed, the Status LED is off. If the Status LED maintained 2 red blinks then the pushbutton is defective.
5	3 red blinks followed by a 2-second pause	EEPROM error.
6	4 red blinks followed by a 2-second pause	Transmitter is unable to lock onto the assigned channel.
7	Constant green for up to 2 seconds	Transmitter power on with no faults detected.
8	Blinking green	Transmission in progress.
9	Blinking orange	Pressing any pushbutton prior to initiating the START command at power on.

6.6.2 Receiver Status Indications

Type	Display Type (Green & Red)	Indication
1	Fast green blinks	Decoding in process
2	Slow green blinks	Decoding on standby
3	Two red blinks	Receiver MAIN relays jammed or defective
4	Fast red blinks	Incorrect transmitter serial number
5	Constant red	Receiver low voltage
6	No light displayed	Decoding processors defective

6.6.3 Receiver Power Indications

Type	Display Type (Red)	Indication
1	On	Power to receiver
2	Off	No power to receiver

6.6.4 Receiver COM Indications

Type	Display Type (Red)	Indication
1	On	Power to relay Board
2	Off	No power to relay board

7. General Specifications

Frequency Range	:	433 ~ 434 MHz
Number of Channels	:	62 channels
Channel Spacing	:	25 KHz
Modulation	:	Digital Frequency Modulation based on Manchester Code, 20bit address, 32bit CRC and Hamming Code.
Encoder & Decoder	:	Microprocessor-controlled
Transmitting Range	:	＞100 Meters (300 feet)
Hamming Distance	:	＞6
Frequency Control	:	Synthesized PLL
Receiver Type	:	Frequency Auto Scanning
Receiver Sensitivity	:	-116dBm
Spurious Emission	:	-50dB
Antenna Impedance	:	50 ohms
Responding Time	:	40 Milliseconds (average)
Transmitting Power	:	1.0mW
Enclosure Type	:	NEMA-4X
Enclosure Rating	:	IP66
Output Contact Rating	:	250V @ 8 Amps
Transmitter Operating Voltage	:	DC 3.0V
Receiver Power Consumption	:	7.0 ~ 22.0VA
Available Receiver Voltages	:	110~120VAC 220~240VAC
Operating Temperature	:	-25℃ ~ 50℃
Transmitter Dimension	:	233mm (L) x 69mm (W) x 35mm (H)
Receiver Dimension	:	260mm (L) x 204mm (W) x 84mm (H)
Transmitter Weight	:	245g (8.6oz)
Receiver Weight	:	1.85kg (4.0lb)

EU Declaration of Conformity
(EMC, R&TTE, SAFETY & MACHINERY)

For the following equipment:

Product	:	Flex ECO Series Radio Remote Control System
Multiple Listee Model No.	:	Flex ECO 4S/4X, ECO 8S/8X, ECO 12S/12X
Manufacturer's Name	:	Advanced Radiotech Corporation
Manufacturer's Address	:	1F, 288-1, Hsin Ya Road, Chien Chen District, Kaohsiung, Taiwan

We herby declare, that all major safety requirements, concerning the CE Mark Directive 2006/42/EC and Low Voltage Directive 2006/95/EC, Electromagnetic Compatibility Directives 2004/108/EC, R&TTE Directive 1999/5/EC are fulfilled, as laid out in the guideline set down by the member states of the EEC Commission.

The standards relevant for the evaluation of the electrical safety requirements are as follow:

EMC	:	EN 301 489-1 + EN 301 489-3
R&TTE	:	EN 300 220-1 V2.3.1 + EN 300 220-2 V2.3.1
SAFETY	:	EN 60950:2006+A1+A11+A12
MACHINERY	:	EN 60204-32:2008, EN 13557:2003+A1:2008 EN ISO 13849-1:2008 (PL=d), EN 60529 (IP66)

Test reports issued by:

EMC	:	SGS
R&TTE	:	SGS
SAFETY	:	SGS
MACHINERY	:	SGS

Person responsible for marking this declaration:

Tom Jou / President

Name and signature of authorized person