Wireless Under Cabinet, Bluetooth, Radio Music System

User's Guide for Model IKB318S v2016-01

IMPORTANT SAFETY INSTRUCTIONS

- Read these Instructions.
- Keep these Instructions.
- Heed all Warnings.
- Follow all instructions.
- Do not use this apparatus near water.
- Clean only with a dry cloth.
- Do not block any ventilation openings. Install in accordance with the manufacturer's instructions.
- Do not install near any heat sources such as radiators, heat registers, stoves, or other apparatus (including amplifiers) that produce heat.
- Do not defeat the safety purpose of the polarized or grounding - type plug. A polarized plug has two blades with one wider than the other. A grounding type plug has two blades and a third grounding prong. The wide blade or the third prong are provided for your safety. When the provided plug does not fit into your outlet, consult an electrician for replacement of the obsolete outlet.
- Protect the power cord from being walked on or pinched particularly at plugs, convenience receptacles, and the point where they exit from the apparatus.
- Only use attachments/accessories specified by the manufacturer.
- Unplug this apparatus during lightning storms or when unused for long periods of time.
- Refer all servicing to qualified service personnel. Servicing is required when the apparatus has been damaged in any way, such as power-supply cord or plug is damaged, liquid has been spilled or objects have fallen into the apparatus, the apparatus has been exposed to rain or moisture, does not operate normally, or has been dropped.
- Use only with a cart, stand, tripod, bracket, or table specified by the manufacturer, or sold with the apparatus. When a cart is used, use caution when moving the cart/apparatus combination to avoid injury from tip-over.

FCC WARNINGS

Warning: Changes or modifications to this unit not expressly approved by the party responsible for compliance could void the user's authority to operate the equipment.
NOTE: This equipment has been tested and found to comply with the limits for a Class B digital device, pursuant to Part 15 of the FCC Rules. These limits are designed to provide reasonable protection against harmful interference in a residential installation. This equipment generates, uses, and can radiate radio frequency energy and, if not installed and used in accordance with the instructions, may cause harmful interference to radio communications. However, there is no guarantee that interference will not occur in a particular installation. If this equipment does cause harmful interference to radio or television reception, which can be determined by turning the equipment off and on, the user is encouraged to try to correct the interference by one or more of the following measures:

- Reorient or relocate the receiving antenna.
- Increase the separation between the equipment and receiver.
- Connect the equipment into an outlet on a circuit different from that to which the receiver is connected.
- Consult the dealer or an experienced radio/TV technician for help.

ADDITIONAL WARNINGS AND PRECAUTIONS

- **CAUTION**: TO PREVENT ELECTRIC SHOCK, MATCH WIDE BLADE OF PLUG TO WIDE SLOT, FULLY INSERT.
- Mains plug is used as disconnect device and it should remain readily operable during intended use. In order to disconnect the apparatus from the mains completely, the mains plug should be disconnected form the mains socket outlet completely.
- **WARNING:** To reduce the risk of fire or electric shock, do not expose this apparatus to rain, moisture, dripping, or splashing.
- **CAUTION:** Use of controls or adjustments or performance of procedures other than those specified may result in hazardous radiation exposure.
- **WARNING:** Changes or modifications to this unit not expressly approved by the party responsible for compliance could void the user's authority to operate the equipment.
- **WARNING:** Do not place this unit directly onto furniture surfaces with any type of soft, porous, or sensitive finish. As with any rubber compound made with oils, the feet could cause marks or staining where the feet reside. We recommend using a protective barrier such as a cloth or a piece of glass between the unit and the surface to reduce the risk of damage and/or staining.
- **WARNING:** Use of this unit near fluorescent lighting may cause interference regarding use of the remote. If the unit is displaying erratic behavior move away from any fluorescent lighting, as it may be the cause.
- **WARNING**: Shock hazard - Do Not Open.
- Caution and marking information is located at the rear or bottom of the apparatus.
- Objects filled with liquids, such as vases, shall not be placed on the apparatus.
- Keep new and used batteries away from children. If the battery compartment does not close securely, stop using the product and keep it away from children.
- If you think batteries might have been swallowed or placed inside any part of the body, seek immediate medical attention.
- CAUTION: Danger of explosion if battery is incorrectly replaced. Replace only with the same or equivalent type.
- WARNING: There is a danger of explosion if you attempt to charge standard Alkaline batteries in the unit. Only use rechargeable NiMH batteries.
- Battery shall not be exposed to excessive heat such as sunshine, fire, or the like.
- Do not mix old and new batteries.
- Completely replace all old batteries with new ones.
- Do not mix alkaline, standard (carbon-zinc), or rechargeable (ni-cad, ni-mh, etc) batteries.
- Batteries should be recycled or disposed of as per state and local guidelines.
- This product meets and complies with all Federal regulations.

WARNING : This product can expose you to chemicals including lead, which is known to the State of California to cause cancer and birth defects or other reproductive harm. For more information go to www.P65Warnings.ca.gov.

CAUTION
RISK OF ELECTRIC SHOCK
DO NOT OPEN

ATTENTION
RISQUE D' ELECTROCUTION
NE PAS OUVRIR

Warning: To reduce the risk of electric shock, do not remove cover (or back). No user-serviceable parts inside. Refer servicing to qualified service personnel.

The exclamation point within an equilateral triangle is intended to alert the user to the presence of important operating and maintenance (servicing) instructions in the literature accompanying the appliance.

The lightning flash with arrowhead symbol, within an equilateral triangle, is intended to alert the user to the presence of uninsulated "dangerous voltage" within the product's enclosure that may be of sufficient magnitude to constitute a risk of electric shock to persons.

WARNING: DO NOT INGEST BATTERY, CHEMICAL BURN HAZARD.

FCC Radiation Exposure Statement

This equipment complied with FCC radiation exposure limits set forth for an uncontrolled environment. This equipment should be installed and operated with minimum distance 20cm between the radiator & your body.

Features & Controls

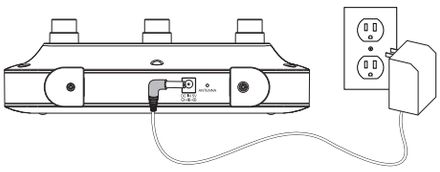

Power

Plug the included AC/DC power adapter into the DC POWER INPUT on the unit and an AC power outlet to power the unit.

Battery Backup

The battery backup is intended for short power outages only. The unit's primary functions cannot run off of the battery backup alone.

Requires 2 AAA-size batteries (not included).

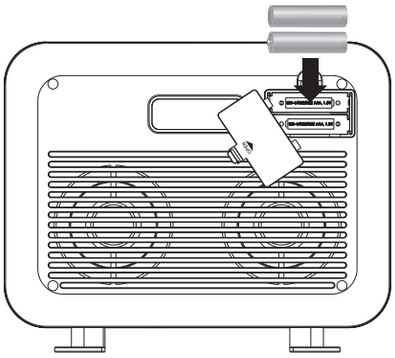

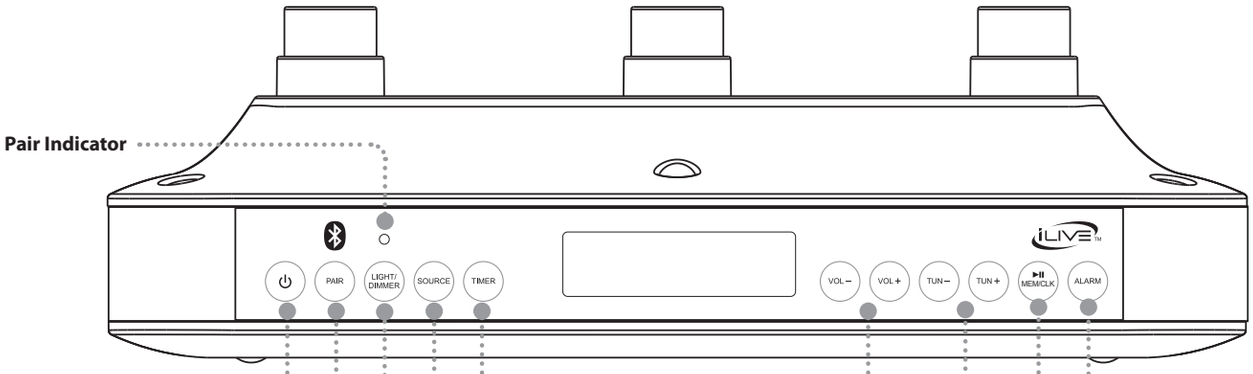

Power
Press to turn the unit on or off.

Pair
Press to begin pairing a Bluetooth device.

Light/Dimmer
Press to turn the under cabinet light on.
Press and hold to dim the display.

Timer
Press to begin setting the timer.

Source
Press to switch between Bluetooth and Radio mode.

Volume +/-
Press to adjust the volume up or down.

Tune +/-
Press to tune the radio.
Press and hold to search for the next available station.

Alarm
Press to begin setting the alarm.

Play/Pause/ Memory/Clock
Press to play or pause in Bluetooth mode.
Press to browse through preset stations in Radio mode.
Press and hold to begin saving a station as a preset. With the power off, press to begin setting the clock.

Mounting Under a Cabinet

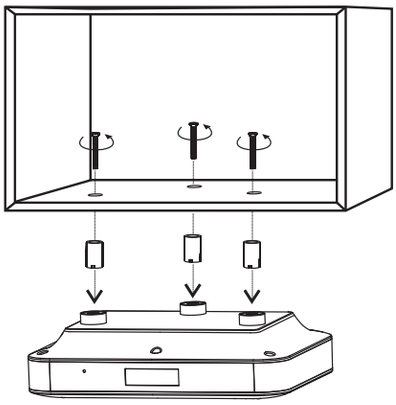

Use and follow the instructions on the included Mounting Template when attaching to the underside of your cabinet.

Clock & Sleep Timer

Setting the Clock

1. With the power off, press the **Play/Pause/Memory/Clock** button. The hour on the display will begin blinking.
2. Press the **Tune** buttons to adjust the hour.
3. Press the **Play/Pause/Memory/Clock** button again to adjust the minutes The minutes on the display will begin blinking.
4. Press the **Tune** buttons to adjust the minutes.
5. Press the **Play/Pause/Memory/Clock** button to finish setting the time.

Setting the Timer

1. Press the **Timer** button, the display will begin flashing.
2. **Press and hold** the **Tune** buttons to adjust the timer in increments of 10 min. *Ex. 180,170 or 0.* **Short press** the **Tune** buttons to adjust the timer in increments/decrements of 1 min.
3. After the set time has expired the under cabinet music system will sound an alarm through the speaker.
4. To cancel the alarm after it has sounded, press the **Power** button.
5. To cancel the timer before the alarm has sounded, press and hold the **Timer** button until the display reads **000** and the timer light is no longer lit.

Alarm

Setting the Alarm

1. With the power OFF, press and hold the **Alarm** button. The hour on the display will begin blinking.
2. Press the **Tune** buttons to adjust the hour.
3. Press the **Alarm** button. The minutes on the display will begin blinking.
4. Press the **Tune** buttons to adjust the minutes.
5. Press the **Alarm Set** button.
6. Press the **Source** button to select the alarm source: **Radio** or **Buzzer.**
   Refer to the Radio section for more information on tuning the radio.
7. Press the **Alarm** button.
8. To turn the alarm OFF, press the **Power** button.
9. To cancel the alarm before the alarm has sounded, press the **Alarm** button.

Bluetooth

Pairing a Bluetooth Device for the First Time

1. Power the unit ON and press the **Source** button to switch to Bluetooth mode. The **Pairing Indicator** will begin slowly flashing blue.
2. Press the **Pair** button. The **Pairing Indicator** will begin quickly flashing blue. *When pairing, remain within 3 feet of the unit.*
3. Using the controls on your Bluetooth device to select **IKB318** in your Bluetooth settings to pair. If your device requests a password, enter the default password **0 0 0 0** . *You may need to refer to the user's manual for your specific device for instructions on pairing and connecting Bluetooth devices.*
4. When successfully paired and connected, the **Pairing Indicator** will display a solid blue light.
   After initial pairing, the unit will stay paired unless unpaired manually by the user or erased due to a reset of the device. If your device should become unpaired or you find it is unable to connect, repeat the above steps or press the Pair button to start the pairing process pairing again.

Playing Audio Wirelessly

1. Use the native controls on the connected Bluetooth Device to select a track.
2. To play or pause the selected track, use the native controls on the connected Bluetooth Device or the **Play/Pause/Memory/Clock** button on the unit.
3. Audio played through the connected Bluetooth device will now be heard through the speakers.

Radio

Radio Reception

Adjust the position of the **FM Antenna** to improve FM radio reception.

Tuning the FM Radio

1. Press the **Power** button to turn the under cabinet music system on.
2. Press the **Source** button to switch to FM Radio Mode.
3. Press the **Tune** button to tune the radio.
4. Hold down the **Tune** button to scan for the next available station.

Saving and Tuning Preset Radio Stations

1. Tune to the desired station.
2. Press and hold the **Play/Pause/Memory/Clock** button.
3. Preset number will appear on the display.
4. Press the **Tune** buttons to adjust to the desired preset number.
5. Press the **Play/Pause/Memory/Clock** button to save the current radio station to the selected preset.
6. Press the **Play/Pause/Memory/Clock** button to cycle through preset radio stations.

International Support

To download this User's Guide in English, Spanish, or French, or to get answers to frequently asked questions, visit the support section at: **www.iLiveElectronics.com**

Para descargar este Manual del Usuario en inglés, español y francés, o para obtener respuestas a preguntas frecuentes, visite la sección de apoyo en: **www.iLiveElectronics.com**

Pour télécharger ce guide de l'utilisateur en anglais, espagnol ou français, ou pour obtenir des réponses à des questions fréquemment posées, consultez la rubrique d'assistance sur: **www.iLiveElectronics.com**

For Warranty Information and the most up-to-date version of this User's Guide, go to **www.iLiveElectronics.com**

Customer Service: *1-888-999-4215* **| Email Support:** *prodinfo@dpiinc.com* **| Email Parts:** *partsinfo@dpiinc.com*

Copyright © 2018 Digital Products International (DPI, Inc.) All other trademarks appearing herein are the property of their respective owners. Specifications are subject to change without notice.

Made Green

Protect for Today
Sustain for Tomorrow