EM7411

Product Technical Specification

41113694
Rev 5
Proprietary and Confidential
Contents subject to change

Important Notice

Due to the nature of wireless communications, transmission and reception of data can never be guaranteed. Data may be delayed, corrupted (i.e., have errors) or be totally lost. Although significant delays or losses of data are rare when wireless devices such as the Lantronix, Inc. product are used in a normal manner with a well-constructed network, the Lantronix, Inc. product should not be used in situations where failure to transmit or receive data could result in damage of any kind to the user or any other party, including but not limited to personal injury, death, or loss of property. Lantronix, Inc. accepts no responsibility for damages of any kind resulting from delays or errors in data transmitted or received using the Lantronix, Inc. product, or for failure of the Lantronix, Inc. product to transmit or receive such data.

Safety and Hazards

Do not operate the Lantronix, Inc. product in areas where blasting is in progress, where explosive atmospheres may be present, near medical equipment, near life support equipment, or any equipment which may be susceptible to any form of radio interference. In such areas, the Lantronix, Inc. product **MUST BE POWERED OFF**. The Lantronix, Inc. product can transmit signals that could interfere with this equipment.

Do not operate the Lantronix, Inc. product in any aircraft, whether the aircraft is on the ground or in flight. In aircraft, the Lantronix, Inc. product **MUST BE POWERED OFF**. When operating, the Lantronix, Inc. product can transmit signals that could interfere with various onboard systems.

Note: Some airlines may permit the use of cellular phones while the aircraft is on the ground and the door is open. Lantronix, Inc. products may be used at this time.

The driver or operator of any vehicle should not operate the Lantronix, Inc. product while in control of a vehicle. Doing so will detract from the driver or operator's control and operation of that vehicle. In some states and provinces, operating such communications devices while in control of a vehicle is an offence.

Limitation of Liability

The information in this manual is subject to change without notice and does not represent a commitment on the part of Lantronix, Inc.. LANTRONIX, INC. AND ITS AFFILIATES SPECIFICALLY DISCLAIM LIABILITY FOR ANY AND ALL DIRECT, INDIRECT, SPECIAL, GENERAL, INCIDENTAL, CONSEQUENTIAL, PUNITIVE OR EXEMPLARY DAMAGES INCLUDING, BUT NOT LIMITED TO, LOSS OF PROFITS OR REVENUE OR ANTICIPATED PROFITS OR REVENUE ARISING OUT OF THE USE OR INABILITY TO USE ANY LANTRONIX, INC. PRODUCT, EVEN IF LANTRONIX, INC. AND/OR ITS AFFILIATES HAS BEEN ADVISED OF THE POSSIBILITY OF SUCH DAMAGES OR THEY ARE FORESEEABLE OR FOR CLAIMS BY ANY THIRD PARTY.

Notwithstanding the foregoing, in no event shall Lantronix, Inc. and/or its affiliates aggregate liability arising under or in connection with the Lantronix, Inc. product, regardless of the number of events, occurrences, or claims giving rise to liability, be in excess of the price paid by the purchaser for the Lantronix, Inc. product.

Patents

This product may contain technology developed by or for Lantronix, Inc. Inc. This product includes technology licensed from QUALCOMM®. This product is manufactured or sold by Lantronix, Inc. Inc. or its affiliates under one or more patents licensed from InterDigital Group and MMP Portfolio Licensing.

Copyright

©2021 Lantronix, Inc.. All rights reserved.

Trademarks

Lantronix, Inc.®, AirPrime®, AirLink®, AirVantage® and the Lantronix, Inc. logo are registered trademarks of Lantronix, Inc., Inc.

Windows® and Windows Vista® are registered trademarks of Microsoft Corporation.

QUALCOMM® is a registered trademark of QUALCOMM Incorporated. Used under license.

Other trademarks are the property of their respective owners.

Contact Information

Sales information and technical support, including warranty and returns	Web: https://www.lantronix.com/about-us/contact/ Global toll-free number: (800) 422-7055 6:00 am to 6:00 pm PST
Corporate and product information	Web: https://www.lantronix.com/

Revision History

Revision number	Release date	Changes
1	February 2020	Preliminary draft
2	April 2020	Updated Carrier Aggregation Download Combinations
3	October 2020	Updated GNSS statements to include QZSS Updated CA combinations Added System, Tx, and Rx block diagrams Updated Rx Sensitivity Updated Current Consumption Removed A-GPS statement from Position Location (GNSS) topic Updated GNSS Specifications - Operational Limits Updated Table 7-2 Antenna Gain and Collocated Radio Transmitter Specifications
4	February 2021	Added TX_ON Added Testing appendix
5	May 2021	Updated Figure 6-2

Contents

Introduction **11**
Supported RF bands 11
Physical Features 13
Application Interface Features 13
Module Features. 13
LTE Features 14
Short Message Service (SMS) Features 14
Position Location (GNSS) 14
Supporting Documents 15
Accessories 15
Required Connectors 15
Ordering Information 15
Integration Requirements 15

Electrical Specifications **17**
Host Interface Pin Assignments 20
Power Supply 25
USB Interface 25
Host-side Recommendation 26
USB Throughput Performance 26
User-developed Drivers 26
SIM Interface 26
SIM Implementation 29
Control Interface (Signals) 30
WAKE_ON_WAN# — Wake Host 30
W_DISABLE1# (Wireless Disable) and W_DISABLE2# (GNSS Disable) 31
Full_Card_Power_Off# and RESET# 32
WWAN_LED#—LED Output 33
Tx Activity Indicator (TX_ON) 34
Antenna Control 35

RF Specifications **36**
RF Connections 36
Shielding 36
Antenna and Cabling 37
Ground Connection 38
Interference and Sensitivity 38
Interference from Other Wireless Devices 38
Host-generated RF Interference 39
Device-generated RF Interference 39
Methods to Mitigate Decreased Rx Performance 39
Radiated Spurious Emissions (RSE) 39
Radiated Sensitivity Measurement 40
Lantronix, Inc.' Sensitivity Testing and Desensitization Investigation 40
Sensitivity vs. Frequency 40
Supported Frequencies 40
Conducted Rx Sensitivity / Tx Power 43
GNSS Specifications 44

Power **46**
Power Consumption 46
Module Power States 48
Power State Transitions 49
Power Interface 50
Power Ramp-up 50
Timing 50
Power Supply Noise 52
SED (Smart Error Detection) 52
Tx Power Control 52

Software Interface **53**
Support Tools. 53
Host Interface. 53

Mechanical and Environmental Specifications 54
Electrostatic Discharge (ESD) 55
Thermal Considerations 55
Module Integration Testing 56

Regulatory Compliance and Industry Certifications 57
Important Compliance Information for the United States and Canada 57

Antenna Specification 60
Recommended Main/Diversity Antenna Specifications 60
Recommended GNSS Antenna Specifications 62
Antenna Tests 62

Design Checklist 64

Testing 66
AT Command Entry Timing Requirement 66
Acceptance Testing 66
Acceptance Test Requirements 66
Acceptance Test Procedure 67
Certification Testing 67
Production Testing 68
Functional Production Test 68
Production Test Procedure 69
UMTS (WCDMA) RF Transmission Path Test 70
LTE RF Transmission Path Test 72
UMTS (WCDMA) RF Receive Path Test 74
LTE RF Receive Path Test 76
GNSS RF Receive Path Test 78
Quality Assurance Testing 78
Suggested Testing Equipment 79
Testing Assistance Provided by Lantronix, Inc. 79

IOT/Operator Testing 79
Extended AT Commands for Testing 80

Packaging 81

References 83
Lantronix, Inc. Documents 83
Command Documents 83
Other Documents 83
Industry/Other Documents 83

Acronyms 84

Index 90

List of Tables

Table 1-1: Supported RF Bands 11
Table 1-2: Carrier Aggregation Downlink Combinations 11
Table 1-3: Carrier Aggregation Uplink Combinations 12
Table 1-4: Required Host-Module Connectors 15
Table 2-1: Host Interface (75-pin) Connections—Module View 21
Table 2-2: Power and Ground Specifications 25
Table 2-3: USB Interfaces 25
Table 2-4: SIM Interface Signals 27
Table 2-5: Module Control Signals 30
Table 2-6: W_DISABLE1#/W_DISABLE2# Usage 31
Table 2-7: Full_Card_Power_Off# and RESET# Usage 33
Table 2-8: Tx Activity Indicator States 34
Table 2-9: Tx Activity Indicator Characteristics 34
Table 2-10: Antenna Control Signals 35
Table 3-1: LTE Frequency Bands 41
Table 3-2: LTE Bandwidth Support 41
Table 3-3: WCDMA Frequency Bands Support 42
Table 3-4: Conducted Rx (Receive) Sensitivity—LTE Bands 43
Table 3-5: Conducted Rx (Receive) Sensitivity—UMTS Bands 43
Table 3-6: Conducted Tx (Transmit) Power Tolerances 44
Table 3-7: GNSS Specifications 44
Table 4-1: Averaged Standby DC Power Consumption 46
Table 4-2: Averaged Call Mode DC Power Consumption 47
Table 4-3: Miscellaneous DC Power Consumption 47
Table 4-4: Module Power States 48
Table 4-5: Power State Transition Trigger Levels 49
Table 4-6: USB 2.0 Power-On/Off Timing Parameters (Double Enumeration) 51
Table 4-7: USB 2.0 Power-On/Off Timing Parameters (Single Enumeration) 51
Table 4-8: USB 3.0 Power-On/Off Timing Parameters (Single Enumeration) 51
Table 4-9: Dynamic Power Control of SAR Backoff State 52

Table 6-1: Mechanical and Environmental Specifications 54
Table 7-1: Standards Compliance..... 57
Table 7-2: Antenna Gain and Collocated Radio Transmitter Specifications 58
Table A-1: Antenna Requirements..... 60
Table A-2: GNSS Antenna Requirements..... 62
Table B-1: Hardware Integration Design Considerations..... 64
Table 3-1: Test Settings—UMTS Transmission Path..... 70
Table 3-2: Test Settings—LTE Transmission Path 72
Table 3-3: Test Settings—UMTS Receive Path..... 74
Table 3-4: Test Settings—LTE Receive Path 76
Table 3-5: Extended AT Commands..... 80
Table F-1: Acronyms and Definitions 84

List of Figures

Figure 2-1: System Block Diagram 18
Figure 2-2: Expanded RF (Transmit) Block Diagram 19
Figure 2-3: Expanded RF (Receive/GNSS) Block Diagram 20
Figure 2-4: Recommended Capacitor Placement for USB3.0 Signals 26
Figure 2-5: SIM Application Interface (applies to both SIM interfaces) 28
Figure 2-6: SIM Card Contacts (Contact View) 28
Figure 2-7: Recommended WAKE_ON_WAN# Connection 31
Figure 2-8: Recommended Wireless Disable Connection 32
Figure 2-9: Example LED. 34
Figure 2-10: TX_ON State During Transmission 35
Figure 3-1: Module Connectors (Preliminary shield design, subject to change) 36
Figure 4-1: Voltage/Temperature Monitoring State Machines 49
Figure 4-2: Signal Timing (Full_Card_Power_Off#, and USB Enumeration) 50
Figure 6-1: Shield Locations (Top View) 55
Figure 6-2: Copper Pad Location on Bottom Side of Module 56
Figure 4-1: Device Placement in Module Tray 81
Figure 4-2: Shipping Package 82

1: Introduction

The Lantronix, Inc. EM7411 Embedded Module is an M.2 module that provides LTE, UMTS, and GNSS connectivity for notebook, ultrabook, tablet computers, and M2M applications over several radio frequency bands.

Supported RF bands

The module, based on Qualcomm's MDM9250 baseband processor, supports data operation on LTE and UMTS networks over the bands described in Table 1-1, with LTE carrier aggregation (CA) as described in Table 1-2 and Table 1-3.

Table 1-1: Supported RF Bands

RAT	Bands														
	2	4	5	7	12	13	14	25	26	41	42	43	48	66	71
LTE[a]	F	F	F	F	F	F	F	F	F	T	T	T	T	F	F
UMTS[b]	Y	Y	Y												
GNSS	• GPS: 1575.42 MHz • GLONASS: 1602 MHz • BeiDou: 1561.098 MHz • Galileo: 1575.42 MHz • QZSS: 1575.42 MHz														

a. (LTE) Downlink MIMO support (2x2; 4x2)
F=FDD; T=TDD
Data rates: Downlink (Cat 7 with 2CA, 64QAM=300 Mbps), Uplink (Cat 13 with 2CA contiguous, 64QAM=150 Mbps)

b. UMTS (DC-HSPA+, HSPA+, HSPA, UMTS)
Diversity support
Data rates: Downlink (Cat 24, up to 42 Mbps), Uplink (Cat 6, up to 5.76 Mbps)

Table 1-2: Carrier Aggregation Downlink Combinations

1 Band / 2CC	2 Bands / 2CC
CA_2A-2A	CA_2A-5A
CA_2C	CA_2A-7A
	CA_2A-12A
	CA_2A-13A
	CA_2A-14A
	CA_2A-71A

Table 1-2: Carrier Aggregation Downlink Combinations (Continued)

1 Band / 2CC	2 Bands / 2CC
CA_4A-4A	CA_4A-5A
	CA_4A-7A
	CA_4A-12A
	CA_4A-13A
	CA_4A-71A
CA_5B	CA_5A-66A
CA_7A-7A	CA_7A-12A
CA_7B	
CA_7C	
CA_12B	CA_12A-66A
	CA_13A-66A
	CA_14A-66A
CA_25A-25A	CA_25A-26A
	CA_26A-41A
CA_41A-41A	
CA_41C	
CA_42A-42A	
CA_42C	
CA_43C	
CA_48A-48A	
CA_48C	
CA_66A-66A	CA_66A-71A
CA_66B	
CA_66C	

Table 1-3: Carrier Aggregation Uplink Combinations

CA_5B
CA_7C
CA_41C
CA_42C
CA_43C
CA_48C

Physical Features

- M.2 form factor—WWAN Type 3042-S3-B (in WWAN—USB 3.0 Port Configuration 2), as specified in *[8] PCI Express NGFF (M.2) Electromechanical Specification Revision 1.0*. (Note: Any variations from the specification are detailed in this document.)
- Ambient operating temperature range with appropriate heatsinking:
  - Class A (3GPP compliant): -30°C to +70°C
  - Class B (operational, non-3GPP compliant): -40°C to +85°C (reduced operating parameters required)

Important: *The internal module temperature (reported by AT!PCTEMP) must be kept below 100°C. For best performance, the internal module temperature should be kept below 85°C. Proper mounting, heat sinks, and active cooling may be required, depending on the integrated application.*

Application Interface Features

- USB interface (QMI) for Linux and Android
- MBIM for Windows 10 and up, and Linux
- AT command interface (*[1] AT Command Set for User Equipment (UE) (Release 6) (Doc# 3GPP TS 27.007)*, plus proprietary extended AT commands)
- Software Development Kits (SDK),including API (Application Program Interface) functions:
  - Windows 10
  - Linux
- Support for active antenna control via dedicated antenna control signals (ANTCTL0:3)
- Dynamic power reduction support via software and dedicated GPIO (DPR)
- OMA DM (Open Mobile Alliance Device Management)
- FOTA (Firmware Over The Air)

Note: OMA DM and FOTA support is operator-dependent.

Module Features

- LTE / DC-HSPA+ / HSPA+ / HSPA / UMTS (WCDMA) operation
- Multiple (up to 16) cellular packet data profiles
- Traditional modem COM port support for AT commands
- USB suspend/resume
- Sleep mode for minimum idle power draw
- SIM application tool kit with proactive SIM commands
- Enhanced Operator Name String (EONS)
- Mobile-originated PDP context activation / deactivation
- Support QoS QCI (3GPP Release 12)
- Static and Dynamic IP address. The network may assign a fixed IP address or dynamically assign one using DHCP (Dynamic Host Configuration Protocol).
- PAP and CHAP support

- PDP context type (IPv4, IPv6, or IPv4v6)
- RFC1144 TCP/IP header compression

LTE Features

- Carrier aggregation:
  - DL LTE-FDD—40 MHz
  - DL LTE-TDD—40 MHz
  - UL LTE—40 MHz intraband contiguous
- CSG support (LTE Femto)
- LTE Advanced receivers (NLIC, eICIC, feICIC)
- Basic cell selection and system acquisition
  - PSS/SSS/MIB decode
  - SIB1–SIB16 decoding
- NAS/AS security procedures
  - Snow 3G/AES/ZUC security
- CQI/RI/PMI reporting
- Paging procedures
  - Paging in Idle and Connected mode
- Dedicated bearer
  - Network-initiated dedicated bearer
  - UE-initiated dedicated bearer
- Multiple PDN connections (IPv4 and IPv6 combinations), subject to operating system support.
- Connected mode intra-LTE mobility
- Idle mode intra-LTE mobility
- iRAT between LTE/3G for idle and connection release with redirection
- Detach procedure
  - Network-initiated detach with reattach required
  - Network-initiated detach followed by connection release

Short Message Service (SMS) Features

- Mobile-originated and mobile-terminated SMS over IMS
- Mobile-originated and mobile-terminated SMS over SGs

Position Location (GNSS)

- Customizable tracking session
- Automatic tracking session on startup
- Concurrent standalone GPS, GLONASS, Galileo, BeiDou, and QZSS
- Assisted GPS/GLONASS SUPL2.0
- gpsOneXTRA 1.0/2.0/3.0/3.1
- GNSS reception on dedicated connector or diversity connector

Supporting Documents

Several additional documents describe module design, usage, integration, and other features. See References on page 83.

Accessories

A hardware development kit is available for AirPrime M.2 modules. The kit contains hardware components for evaluating and developing with the module, including:

- Development board
- Cables
- Antennas
- Other accessories

For over-the-air LTE testing, ensure that suitable antennas are used.

Required Connectors

Table 1-4 describes the connectors used to integrate the EM7411 Embedded Module into your host device.

Table 1-4: Required Host-Module Connectors[a]

Connector type	Description
RF cables	• Mate with M.2-spec connectors • Three connector jacks (I-PEX 20448-001R-081 or equivalent)
EDGE (67 pin)	• Slot B compatible—Per the M.2 standard (*[8] PCI Express NGFF (M.2) Electromechanical Specification Revision 1.0*), a generic 75 pin position EDGE connector on the motherboard uses a mechanical key to mate with the 67 pin notched module connector. • Manufacturers include LOTES (part #APCI0018-P001A01), Kyocera, JAE, Tyco, and Longwell.
SIM	• Industry-standard connector. See SIM Interface on page 26 for details.

a. Manufacturers/part numbers are for reference only and are subject to change. Choose connectors that are appropriate for your own design.

Ordering Information

To order, contact the Lantronix, Inc. Sales Desk at +1 (604) 232-1488 between 8 AM and 5 PM Pacific Time.

Integration Requirements

Lantronix, Inc. provides, in the documentation suite, guidelines for successful module integration and offers integration support services as necessary.

When integrating the EM7411 Embedded Module, the following items must be addressed:

- **Mounting**—Effect on temperature, shock, and vibration performance
- **Power supply**—Impact on battery drain and possible RF interference
- **Antenna location and type**—Impact on RF performance
- **Regulatory approvals**—As discussed in Regulatory Compliance and Industry Certifications on page 57.
- **Service provisioning**—Manufacturing process
- **Software**—As discussed in Software Interface on page 53.
- **Host interface**—Compliance with interface voltage levels

2: Electrical Specifications

The system block diagram in Figure 2-1 represents the EM7411 module integrated into a host system. The module includes the following interfaces to the host:

- Full_Card_Power_Off#—Input supplied to the module by the host—active-low to turn the unit off, or active-high to turn the unit on.
- W_DISABLE1#—Active low input from the host to the EM7411 disables the main RF radio.
- W_DISABLE2#—Active low input from the host to the EM7411 disables the GNSS radio receiver.
- WAKE_ON_WAN#—Active low output used to wake the host when specific events occur.
- WWAN_LED#—Active-low LED drive signal provides an indication of WAN radio ON state.
- RESET#—Active low input from the host used to reset the module.
- Antenna—Three RF connectors (main (Rx/Tx), GNSS, and auxiliary (diversity/MIMO/GNSS)). For details, see RF Specifications on page 36.
- Antenna control—Four signals that can be used to control external antenna switches.
- Dynamic power control—Signal used to adjust Tx power to meet FCC SAR requirements. For details, see Tx Power Control on page 52.).
- Dual SIM—Supported through the interface connector. The SIM cavities / connectors must be placed on the host device for this feature.
- SIM detect—Internal pullup on the module detects whether a SIM is present or not:
  - If a SIM is not inserted, the pin must be shorted to ground.
  - If a SIM is present, the pin will be an open circuit.
- USB—USB 2.0 and USB 3.0 interfaces to the host for data, control, and status information.

The EM7411 has two main interface areas—the host I/O connector and the RF ports. Details of these interfaces are described in the sections that follow.

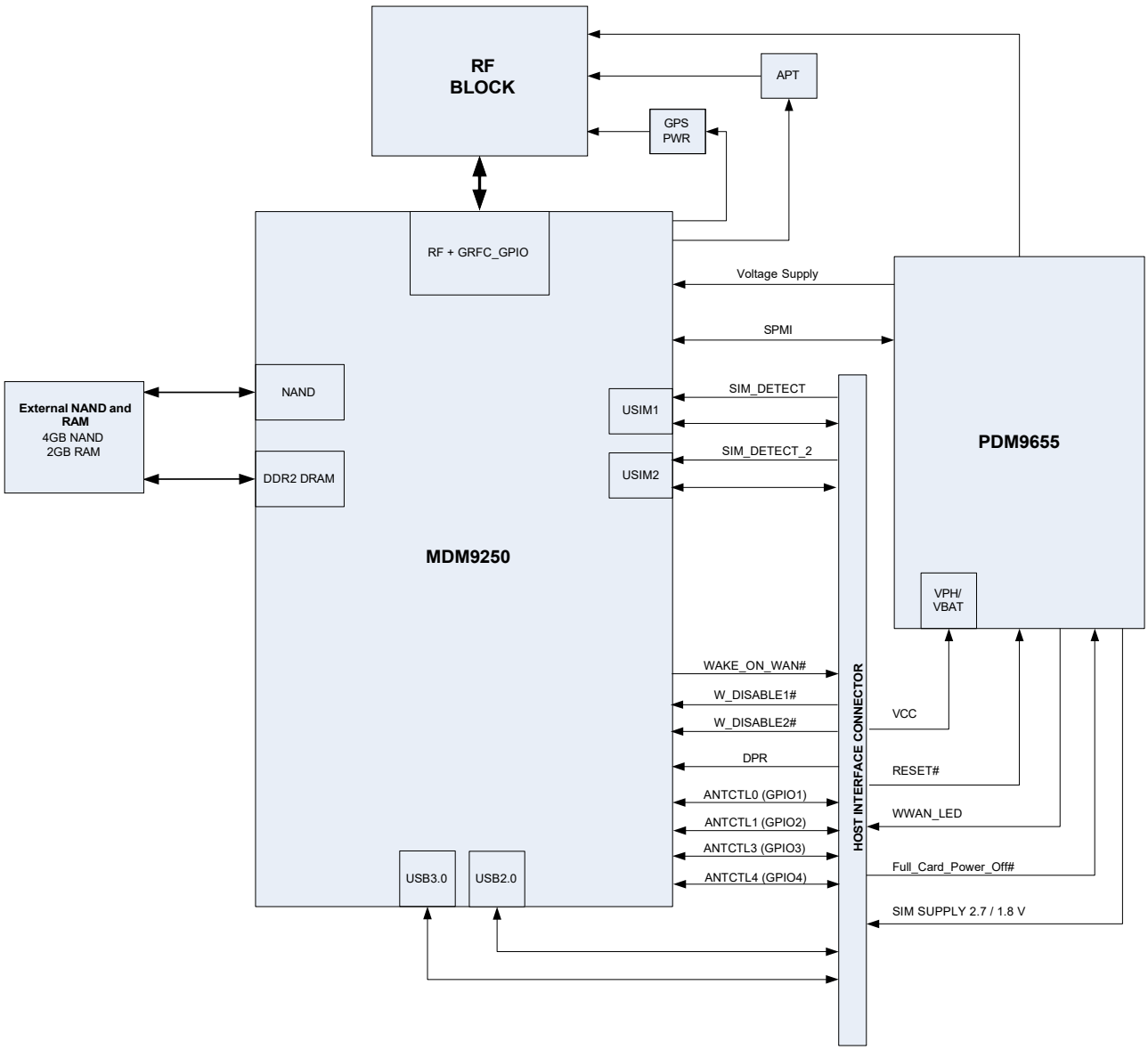

Figure 2-1: System Block Diagram

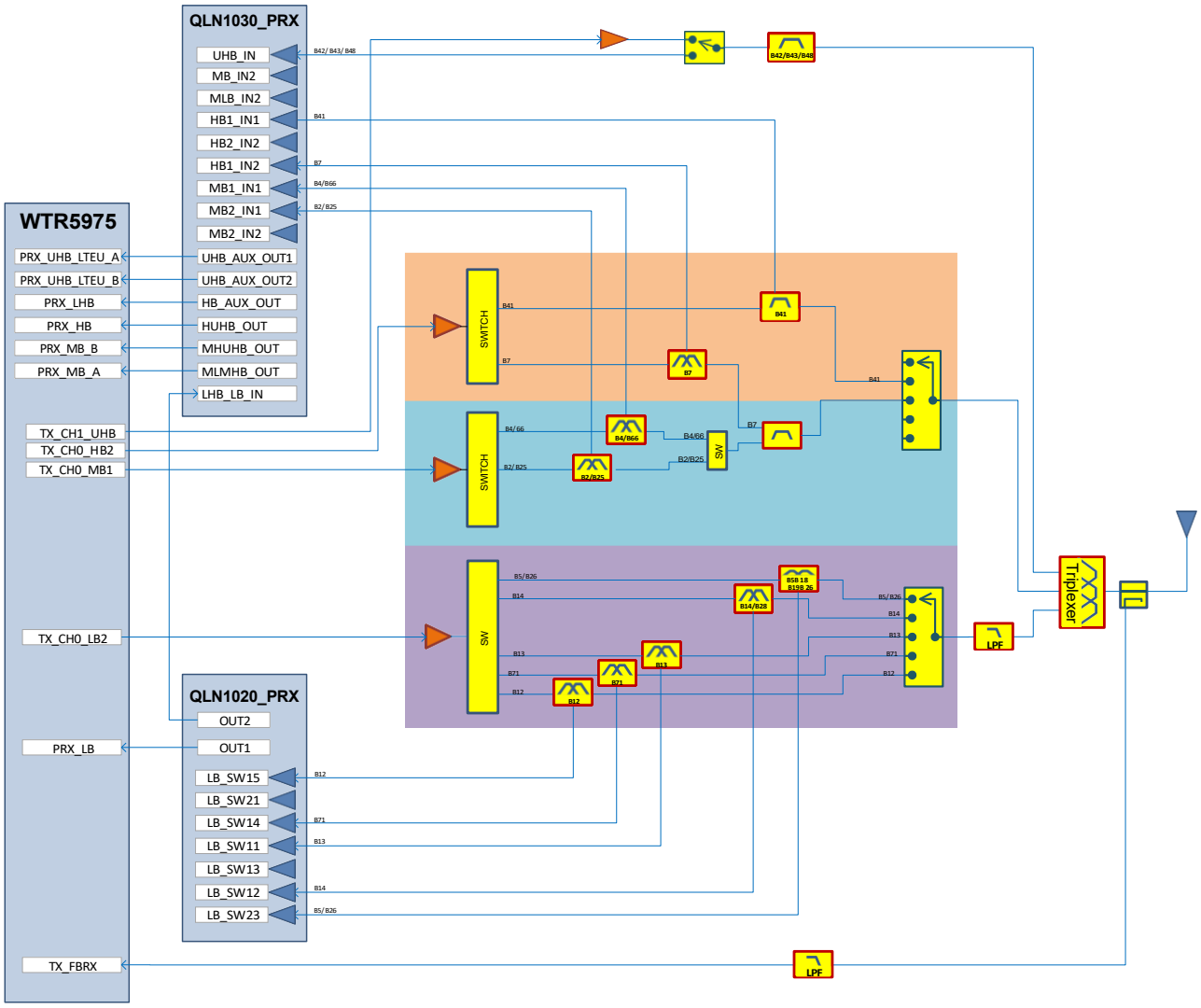

Figure 2-2: Expanded RF (Transmit) Block Diagram

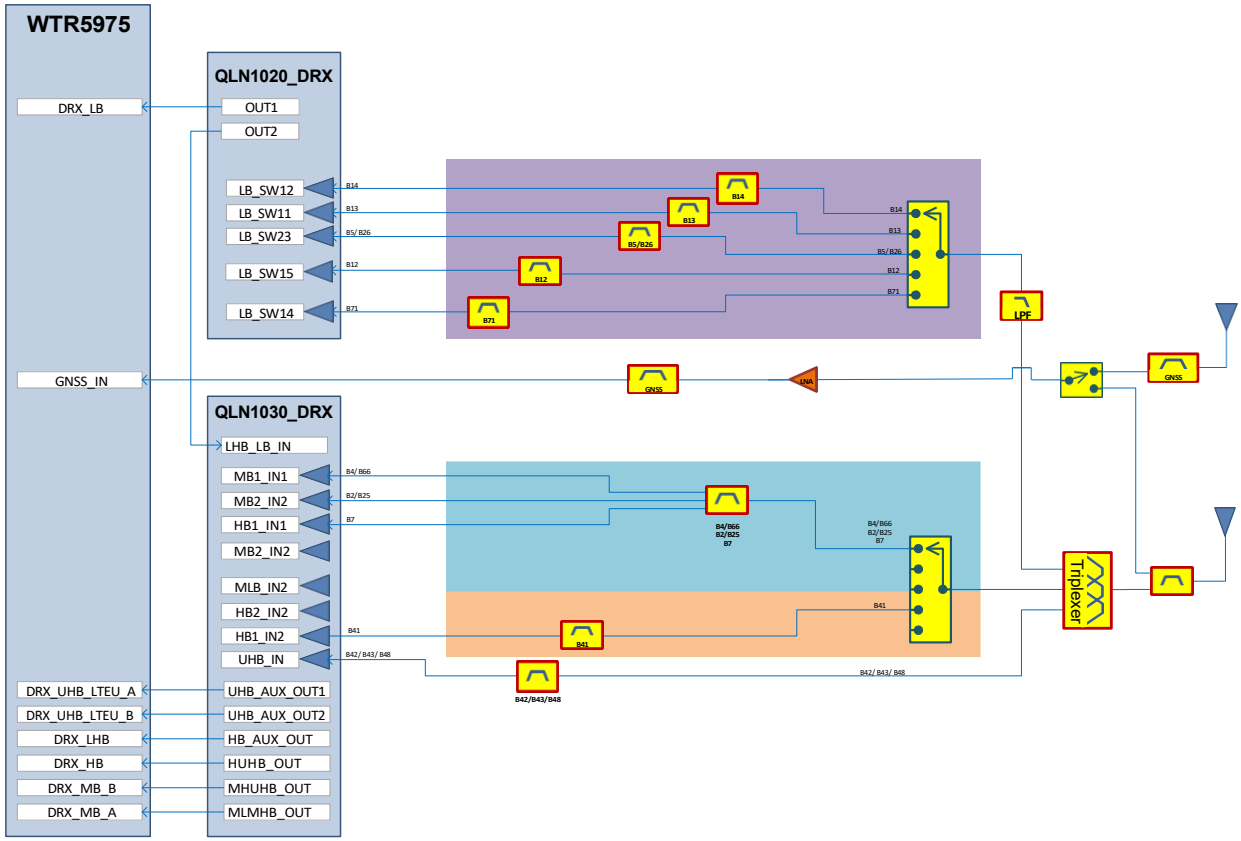

Figure 2-3: Expanded RF (Receive/GNSS) Block Diagram

Host Interface Pin Assignments

The EM7411 host I/O connector provides pins for power, serial communications, and control. Pin assignments are listed in Table 2-1.

Refer to the following tables for pin details based on interface types:

- Table 2-2, Power and Ground Specifications, on page 25
- Table 2-3, USB Interfaces, on page 25
- Table 2-4, SIM Interface Signals, on page 27
- Table 2-5, Module Control Signals, on page 30

Note: On any given interface (USB, SIM, etc.), leave unused inputs and outputs as no-connects.

Note: The host should not drive any signals to the module until >100 ms from the start of the power-on sequence.

Table 2-1: Host Interface (75-pin) Connections — Module View[a]

Pin	Signal name	Pin type[b]	Description	Direction[c]	Active state	Voltage levels (V)		
						Min	Typ	Max
1	CONFIG_3 (NC in default module configuration)		Reserved—Host must not repurpose this pin.					
2	VCC	V	Power source	Input	Power	3.135	3.7	4.4
3	GND	V	Ground	Input	Power	-	0	-
4	VCC	V	Power source	Input	Power	3.135	3.7	4.4
5	GND	V	Ground	Input	Power	-	0	-
6	Full_Card_Power_Off#[d]	PD	Turn module on	Input	High	0.7	-	4.4
			Turn module off	Input	Low	-0.3	-	0.5
7	USB_D+[d]	-	USB data positive	Input/Output	Differential	-	-	-
8	W_DISABLE1#[e]	PU	Wireless Disable (main RF radio)	Input	Low	-	-	0.4
				Input	High	0.7	-	4.4
9	USB_D-[d]	-	USB data negative	Input/Output	Differential	-	-	-
10	WWAN_LED#	OC	LED Driver	Output	Low	0	-	0.15
11	GND	V	Ground	Input	Power	-	0	-
12	Key	Notch location						
13	Key	Notch location						
14	Key	Notch location						
15	Key	Notch location						
16	Key	Notch location						
17	Key	Notch location						
18	Key	Notch location						
19	Key	Notch location						
20	NC		Reserved—Host must not repurpose this pin.					
21	CONFIG_0 (GND in default module configuration)		Reserved—Host must not repurpose this pin.	Output	-		0	
22	NC		Reserved—Host must not repurpose this pin.					
23	WAKE_ON_WAN#[d]	OC	Wake Host	Output	Low	0		0.1
24	NC		Reserved—Host must not repurpose this pin.					
25	DPR	-	Dynamic power control	Input	High	1.17	1.80	2.10
				Input	Low	-0.3	-	0.63

Table 2-1: Host Interface (75-pin) Connections — Module View[a] (Continued)

Pin	Signal name	Pin type[b]	Description	Direction[c]	Active state	Voltage levels (V)		
						Min	Typ	Max
26	W_DISABLE2#[e]	PU	Wireless disable (GNSS radio)	Input	Low	-	-	0.4
				Input	High	0.7	-	4.4
27	GND	V	Ground	Input	Power	-	0	-
28	NC		Reserved—Host must not repurpose this pin.					
29	USB3.0_TX-		USB 3.0 Transmit Data negative	Output	Differential	-	-	-
30	UIM1_RESET[d]	O	SIM Reset	Output	Low	0	-	0.45
					High	2.55 (3V SIM) 1.35 (1.8V SIM)	3.00 (3V SIM) 1.80 (1.8V SIM)	3.10 (3V SIM) 1.90 (1.8V SIM)
31	USB3.0_TX+		USB 3.0 Transmit Data positive	Output	Differential	-	-	-
32	UIM1_CLK[d]	O	SIM Clock	Output	Low	0	-	0.45
					High	2.55 (3V SIM) 1.35 (1.8V SIM)	3.00 (3V SIM) 1.80 (1.8V SIM)	3.10 (3V SIM) 1.90 (1.8V SIM)
33	GND	V	Ground	Input	Power	-	0	-
34	UIM1_DATA[d]	-	SIM IO pin	Input	Low	-0.30 (3V SIM) -0.30 (1.8V SIM)	-	0.60 (3V SIM) 0.35 (1.8V SIM)
					High	2.10 (3V SIM) 1.17 (1.8V SIM)	3.00 (3V SIM) 1.80 (1.8V SIM)	3.30 (3V SIM) 2.10 (1.8V SIM)
				Output	Low	0	-	0.40
					High	2.55 (3V SIM) 1.35 (1.8V SIM)	3.00 (3V SIM) 1.80 (1.8V SIM)	3.10 (3V SIM) 1.90 (1.8V SIM)
35	USB3.0_RX-		USB 3.0 Receive Data negative	Input	Differential	-	-	-
36	UIM1_PWR[d]	V	SIM VCC supply	Output	Power	2.90 (3V SIM) 1.75 (1.8V SIM)	3.00 (3V SIM) 1.80 (1.8V SIM)	3.10 (3V SIM) 1.85 (1.8V SIM)
37	USB3.0_RX+		USB 3.0 Receive Data positive	Input	Differential	-	-	-
38	NC		Reserved					
39	GND	V	Ground	Input	Power	-	0	-

Table 2-1: Host Interface (75-pin) Connections — Module View[a] (Continued)

Pin	Signal name	Pin type[b]	Description	Direction[c]	Active state	Voltage levels (V)		
						Min	Typ	Max
40	SIM_DETECT_2		SIM2 indication	Input		0 V—SIM not present Open circuit—SIM present		
41	NC		Reserved					
42	UIM2_DATA[d]	-	SIM2 IO pin	Input	Low	-0.30 (3V SIM) -0.30 (1.8V SIM)	-	0.60 (3V SIM) 0.35 (1.8V SIM)
					High	2.10 (3V SIM) 1.17 (1.8V SIM)	3.00 (3V SIM) 1.80 (1.8V SIM)	3.30 (3V SIM) 2.10 (1.8V SIM)
				Output	Low	0	-	0.40
					High	2.55 (3V SIM) 1.35 (1.8V SIM)	3.00 (3V SIM) 1.80 (1.8V SIM)	3.10 (3V SIM) 1.90 (1.8V SIM)
43	NC		Reserved					
44	UIM2_CLK[d]	O	SIM2 Clock	Output	Low	0	-	0.45
					High	2.55 (3V SIM) 1.35 (1.8V SIM)	3.00 (3V SIM) 1.80 (1.8V SIM)	3.10 (3V SIM) 1.90 (1.8V SIM)
45	GND	V	Ground	Input	Power	-	0	-
46	UIM2_RESET[d]	O	SIM2 Reset	Output	Low	0	-	0.45
					High	2.55 (3V SIM) 1.35 (1.8V SIM)	-	3.10 (3V SIM) 1.90 (1.8V SIM)
47	NC		Reserved					
48	UIM2_PWR[d]	V	SIM2 VCC supply	Output	Power	2.90 (3V SIM) 1.75 (1.8V SIM)	3.00 (3V SIM) 1.80 (1.8V SIM)	3.10 (3V SIM) 1.85 (1.8V SIM)
49	NC		Reserved					
50	NC		Reserved					
51	GND	V	Ground	Input	Power	-	0	-
52	NC	OC	Reserved					
53	NC		Reserved					
54	NC	OC	Reserved					
55	NC		Reserved					

Table 2-1: Host Interface (75-pin) Connections — Module View[a] (Continued)

Pin	Signal name	Pin type[b]	Description	Direction[c]	Active state	Voltage levels (V)		
						Min	Typ	Max
56	NC		Reserved—Host must not repurpose this pin.					
57	GND	V	Ground	Input	Power	-	0	-
58	NC		Reserved—Host must not repurpose this pin.					
59	ANTCTL0 (GPIO1)		Customer-defined external switch control for multiple antennas	Output	High	1.35	-	1.80
				Output	Low	0	-	0.45
60	Reserved—Host must not repurpose this pin and should leave it not connected.							
61	ANTCTL1 (GPIO2)		Customer-defined external switch control for multiple antennas	Output	High	1.35	-	1.80
				Output	Low	0	-	0.45
	TX_ON		Tx activity indicator	Output	High	1.35	1.80	1.90
62	Reserved—Host must not repurpose this pin and should leave it not connected.							
63	ANTCTL2 (GPIO3)		Customer-defined external switch control for multiple antennas	Output	High	1.35	-	1.80
				Output	Low	0	-	0.45
64	Reserved—Host must not repurpose this pin and should leave it not connected.							
65	ANTCTL3 (GPIO4)		Customer-defined external switch control for multiple antennas	Output	High	1.35	-	1.80
				Output	Low	0	-	0.45
66	SIM_DETECT[d]	PU	SIM indication	Input		0 V—SIM not present Open circuit—SIM present		
67	RESET#	PU	Reset module	Input	Low	-0.3		0.63
68	NC		Reserved					
69	CONFIG_1 (GND in default module configuration)		Reserved—Host must not re-purpose this pin.	Output	-		0	
70	VCC	V	Power source	Input	Power	3.135	3.7	4.4
71	GND	V	Ground	Input	Power	-	0	-
72	VCC	V	Power source	Input	Power	3.135	3.7	4.4
73	GND	V	Ground	Input	Power	-	0	-
74	VCC	V	Power source	Input	Power	3.135	3.7	4.4
75	CONFIG_2 (NC in default module configuration)	V	Reserved	Output	-	-		-

a. All values are preliminary and subject to change.
b. I—Input; O—Digital output; OC—Open Collector output; PU—Digital input (internal pull up); PD—Digital input (internal pull down); V—Power or ground
c. Signal directions are from module's point of view (e.g. 'Output' from module to host, 'Input' to module from host.)
d. Required signal

e. Lantronix, Inc. recommends that the host implement an open collector driver where a Low signal will turn the module off or enter low power mode, and a high signal will turn the module on or leave low power mode.

Power Supply

The host provides power to the EM7411 through multiple power and ground pins as summarized in Table 2-2.

The host must provide safe and continuous power (via battery or a regulated power supply) at all times; the module does not have an independent power supply, or protection circuits to guard against electrical issues.

Table 2-2: Power and Ground Specifications

Name	Pins	Specification	Min	Typ	Max	Units
VCC (3.7V)	2, 4, 70, 72, 74	Voltage range	See Table 2-1 on page 21.			
		Ripple voltage	-	-	100	mV_{pp}
GND	3, 5, 11, 27, 33, 39, 45, 51, 57, 71, 73	-	-	0	-	V

USB Interface

Important: *Host support for USB 2.0 or USB 3.0 signals is required.*

The device supports USB 2.0 (high speed) and USB 3.0 interfaces for communication between the host and module.

Note: USB 2.0 full speed and low speed are not supported.

The interfaces comply with the *[9] Universal Serial Bus Specification, Rev 2.0* and *[10] Universal Serial Bus Specification, Rev 3.0* (subject to limitations described below), and the host device must be designed to the same standards.

Table 2-3: USB Interfaces

	Name	Pin	Description
USB 2.0	USB_D+	7	Data positive
	USB_D-	9	Data negative
USB 3.0	USB3.0-TX-[a]	29	Transmit data negative
	USB3.0-TX+[a]	31	Transmit data positive
	USB3.0-RX-[a]	35	Receive data negative
	USB3.0-RX+[a]	37	Receive data positive

a. Signal directions (Tx/Rx) are from module's point of view.

Host-side Recommendation

Note: When designing the host device, careful PCB layout practices must be followed.

Lantronix, Inc. recommends the host platform include series capacitors on the USB3.0 Rx signals (no capacitors required for the Tx signals), as shown below.

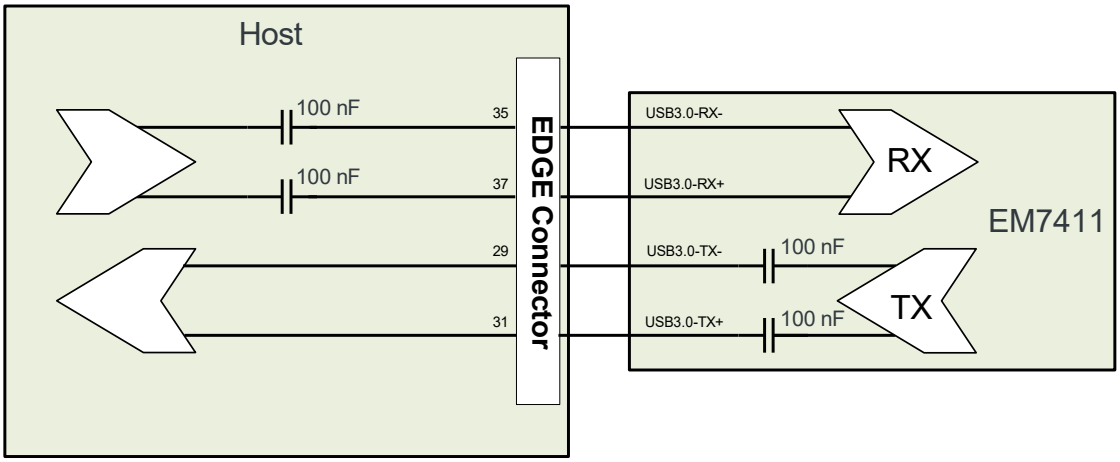

Figure 2-4: Recommended Capacitor Placement for USB3.0 Signals

USB Throughput Performance

This device has been designed to achieve optimal performance and maximum throughput using USB superspeed mode (USB 3.0). Although the device may operate with a high speed host, throughput performance will be on an “as is” basis and needs to be characterized by the OEM. Note that throughput will be reduced and may vary significantly based on packet size, host interface, and firmware revision.

User-developed Drivers

Details for user-developed USB drivers are described in *[4] AirCard/AirPrime USB Driver Developer’s Guide (Doc# 2130634)*.

SIM Interface

Note: Host support for SIM interface signals is required.

The module supports up to two SIMs (Subscriber Identity Module) (1.8 V or 3 V). Each SIM holds information for a unique account, allowing users to optimize their use of each account on multiple devices.

The SIM pins (Table 2-4 on page 27) provide the connections necessary to interface to SIM sockets located on the host device as shown in Figure 2-5 on page 28. Voltage levels over this interface comply with 3GPP standards.

The types of SIM connectors used depends on how the host device exposes the SIM sockets.

Table 2-4: SIM Interface Signals

SIM	Name	Pin	Description	SIM contact[a]	Notes
Primary	UIM1_RESET	30	Reset	2	Active low SIM reset
	UIM1_CLK	32	Serial clock	3	Serial clock for SIM data
	UIM1_DATA	34	Data I/O	7	Bi-directional SIM data line
	UIM1_PWR	36	SIM voltage	1	Power supply for SIM
	SIM_DETECT	66	SIM indication	-	Input from host indicating whether SIM is present or not • Grounded if no SIM is present • No-connect (floating) if SIM is inserted
	UIM_GND		Ground	5	Ground reference UIM_GND is common to module ground
Secondary	UIM2_RESET	46	Reset	2	Active low SIM reset
	UIM2_CLK	44	Serial clock	3	Serial clock for SIM data
	UIM2_DATA	42	Data I/O	7	Bi-directional SIM data line
	UIM2_PWR	48	SIM voltage	1	Power supply for SIM
	SIM_DETECT_2	40	SIM indication	-	Input from host indicating whether SIM is present or not • Grounded if no SIM is present • No-connect (floating) if SIM is inserted
	UIM2_GND		SIM indication	-	Ground reference UIM2_GND is common to module ground

a. See Figure 2-6 on page 28 for SIM card contacts.

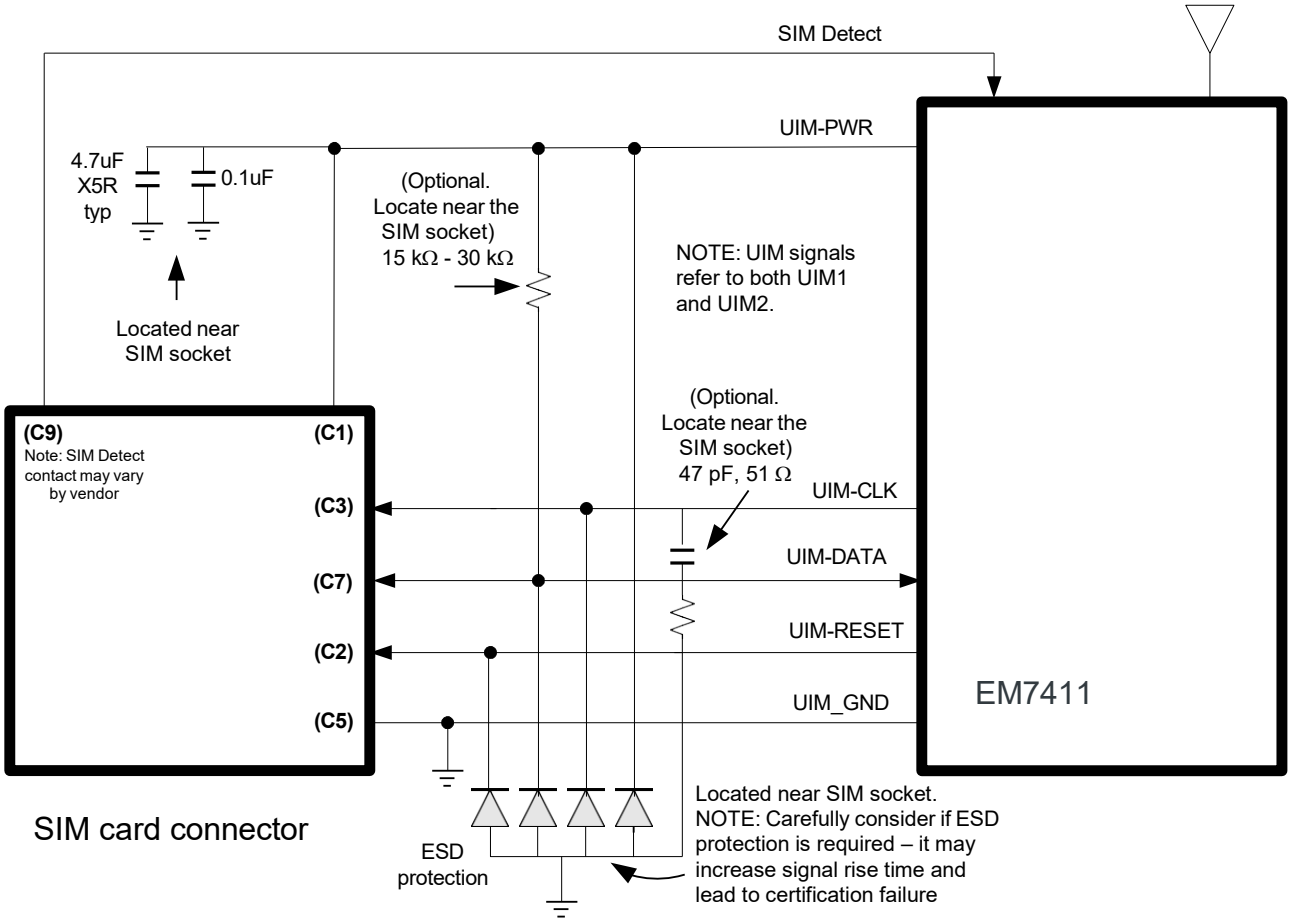

Figure 2-5: SIM Application Interface (applies to both SIM interfaces)

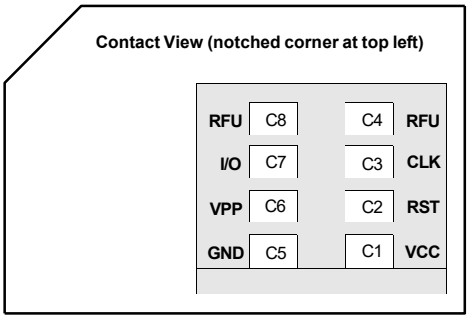

Figure 2-6: SIM Card Contacts (Contact View)

SIM Implementation

Note: For interface design requirements, refer to ETSI TS 102 230 V5.5.0, section 5.2.

When designing the remote SIM interface, you *must* make sure that SIM signal integrity is not compromised.

Some design recommendations include:

- Total impedance of the VCC and GND connections to the SIM, measured at the module connector, should be less than 1 Ω to minimize voltage drop (includes any trace impedance and lumped element components—inductors, filters, etc.).
- Position the SIM connector ≤10 cm from the module. If a longer distance is required because of the host device design, use a shielded wire assembly—connect one end as close as possible to the SIM connector and the other end as close as possible to the module connector. The shielded assembly may help shield the SIM interface from system noise.
- Reduce crosstalk on the UIM1_DATA and UIM2_DATA lines to reduce the risk of failures during GCF approval testing.
- Avoid routing the clock and data lines for each SIM (UIM1_CLK/UIM1_DATA, UIM2_CLK/UIM2_DATA) in parallel over distances >2 cm—cross-coupling of a clock and data line pair can cause failures.
- 3GPP has stringent requirements for I/O rise time (<1 µs), signal level limits, and noise immunity—consider this carefully when developing your PCB layout.
  - Keep signal rise time <1 µs—keep SIM signals as short as possible, and keep very low capacitance traces on the data and clock signals (UIM1_CLK, UIM1_DATA, UIM2_CLK, UIM2_DATA). High capacitance increases signal rise time, potentially causing your device to fail certification tests.
- Add external pull-up resistors (15 kΩ–30 kΩ), if required, between the data and power lines for each SIM (UIM1_DATA/UIM1_PWR, UIM2_DATA/UIM2_PWR) to optimize the signal rise time.
- VCC line should be decoupled close to the SIM socket.
- SIM is specified to run up to 5 MHz (SIM clock rate). Take note of this speed in the placement and routing of the SIM signals and connectors.
- You must decide whether additional ESD protection is required for your product, as it is dependent on the application, mechanical enclosure, and SIM connector design. The SIM pins will require additional ESD protection if they are exposed to high ESD levels (i.e. can be touched by a user).
- Putting optional decoupling capacitors on the SIM power lines (UIM1_PWR, UIM2_PWR) near the SIM sockets is recommended—the longer the trace length (impedance) from the socket to the module, the greater the capacitance requirement to meet compliance tests.
- Putting an optional series capacitor and resistor termination (to ground) on the clock lines (UIM1_CLK, UIM2_CLK) at the SIM sockets to reduce EMI and increase signal integrity is recommended if the trace length between the SIM socket and module is long—47 pF and 50 Ω resistor are recommended.
- Test your first prototype host hardware with a Comprion IT^3 SIM test device at a suitable testing facility.

Control Interface (Signals)

The EM7411 provides signals for:

- Waking the host when specific events occur
- Host control of the module's radios
- Host control of module power
- LED driver output

Note: Host support for Full_Card_Power_Off# is required, and support for other signals in Table 2-5 is optional.

These signals are summarized in Table 2-5 and paragraphs that follow.

Table 2-5: Module Control Signals

Name	Pin	Description	Type[a]
Full_Card_Power_Off#	6	On/off signal	PD
W_DISABLE1#	8	Wireless disable (Main RF)	PU
WWAN_LED#	10	LED driver	OC
WAKE_ON_WAN#	23	Wake host	O
W_DISABLE2#	26	Wireless disable (GNSS)	PU
RESET#	67	Reset module	PU

a. O—Digital pin Output; OC—Open Collector output; PD—Digital pin Input, internal pull down; PU—Digital pin Input, internal pull up

WAKE_ON_WAN# — Wake Host

Note: Host support for WAKE_ON_WAN# is optional.

The EM7411 uses WAKE_ON_WAN# to wake the host when specific events occur.

The host must provide a 5 kΩ–100 kΩ pullup resistor that considers total line capacitance (including parasitic capacitance) such that when WAKE_ON_WAN# is deasserted, the line will rise to 3.7 V (Host power rail) in < 100 ns.

See Figure 2-7 on page 31 for a recommended implementation.

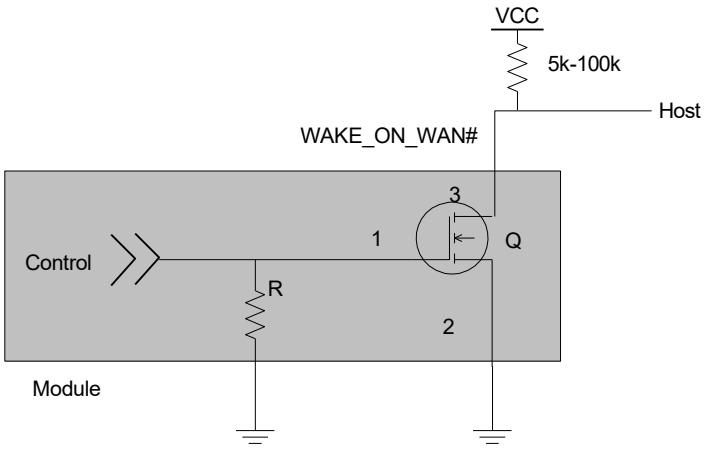

Figure 2-7: Recommended WAKE_ON_WAN# Connection

W_DISABLE1# (Wireless Disable) and W_DISABLE2# (GNSS Disable)

Note: Host support for wireless/GNSS disable signals is optional.

The host device uses W_DISABLE1# to enable/disable the WWAN or radio modem, and W_DISABLE2# to enable/disable GNSS functionality.

Letting these signals float high allows the module to operate normally. These pins have 100 kΩ pull-up resistors. See Figure 2-8 on page 32 for a recommended implementation.

When integrating with your host device, keep the following in mind:

- The signal is an input to the module and should be driven LOW to turn the radio off, or HIGH or floating to keep it on.
- If the host never needs to assert this power state control to the module, leave this signal unconnected from the host interface.

Table 2-6: W_DISABLE1# / W_DISABLE2# Usage

Name	Pin	Description / notes
W_DISABLE1#	8	Enable/disable the WWAN or radio modem[a]. When disabled, the modem cannot transmit or receive. • Leave as not connected or drive HIGH to keep the modem always on. • Drive LOW to turn the modem off.
W_DISABLE2#	26	Enable/disable GNSS functionality[a] • Leave as not connected or drive HIGH to enable GNSS functionality. • Drive LOW to disable GNSS functionality. • For details on enabling / disabling GNSS functionality, see the AT!CUSTOM="GPSENABLE" command.

a. Lantronix, Inc. recommends that the host implement an open collector driver where a Low signal turns off the modem or disables GNSS functionality, and a high signal turns on the modem or enables GNSS functionality.

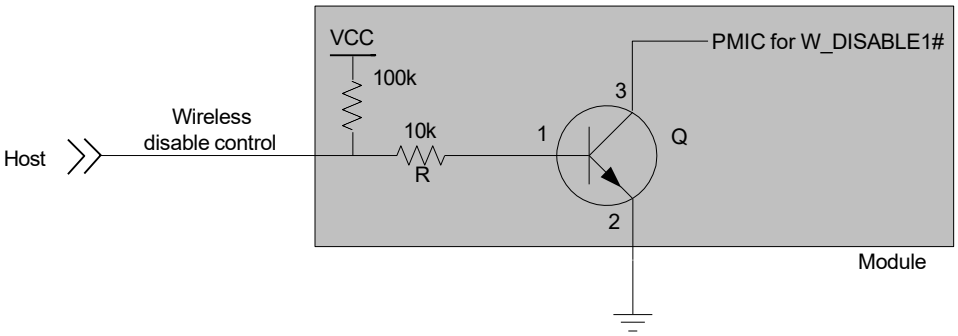

Figure 2-8: Recommended Wireless Disable Connection

Full_Card_Power_Off# and RESET#

Note: Host support for Full_Card_Power_Off# is required, and support for RESET# is optional.

Full_Card_Power_Off# and RESET# are inputs to the module that the host uses as described in Table 2-7.

For timing details, see Power On/Off Timing for the USB on page 50.

Table 2-7: Full_Card_Power_Off# and RESET# Usage

Name	Pin	Description / notes
Full_Card_Power_Off#	6	Powers the module on/off. • Signal is required. • Pull HIGH to keep the module on. To keep the module always on: · Tie the pin directly to a host GPIO (1.8V), or · Use an external pull-up to pull signal high (10–20k for 1.8V, 75–100k for VCC rail). Note that a larger-value resistor will reduce leakage current. • To power off the module, see Required Shutdown Sequence on page 51.
RESET#	67	Resets the module. • Signal is optional. The module will operate correctly if the pin is left disconnected on the host. • To reset the module, pulse the RESET# pin with a logic low signal for 3 (min) to 5.5 seconds (max)—if the signal is held low for more than 5.5 seconds, the reset cycle restarts, and if it continues to be held low through several cycles, the module will not fully boot. Otherwise, leave the signal floating or high impedance (the module will remain operational because the module has a pull-up resistor to an internal reference voltage (1.8V) in place.). 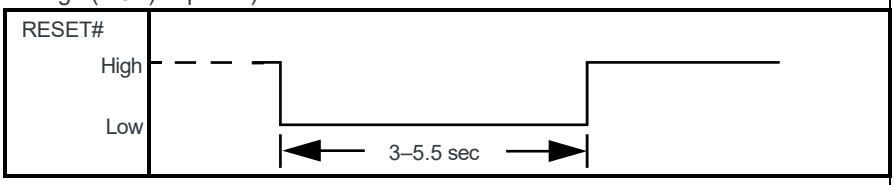 • The signal requires an open collector input from the host. • This is a 'hard' reset, which should be used only if the host cannot communicate with the module via the USB port. (If the port is not working, the module may have locked up or crashed.) **Caution:** *RESET# should not be driven or pulled to a logic high level by the host, as this may cause damage to the module.*

WWAN_LED#— LED Output

Note: Host support for WWAN_LED# is optional.

The configuration for the LED shown in Figure 2-9 is customizable. Contact your Lantronix, Inc. account representative for details.

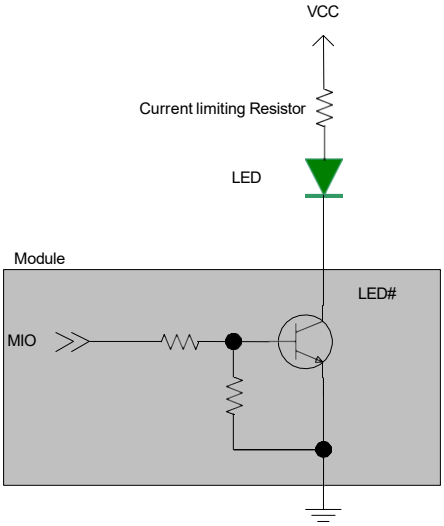

Figure 2-9: Example LED

Tx Activity Indicator (TX_ON)

The module provides a digital output signal to indicate the occurrence of Tx activity.

Table 2-8: Tx Activity Indicator States

Pin	Signal name	Direction[a]	I/O type	Module state	Signal State
61	TX_ON	Output	1.8V	During Tx activity	High
				No Tx	Low

a. Signal direction with respect to module—TX_ON (pin 5) is an output from the module to the host.

Table 2-9: Tx Activity Indicator Characteristics

Parameter		Min	Max
$T_{advance}$	LTE	89 µs	—
	UMTS	46 µs	—
T_{delay}		—	699 ms

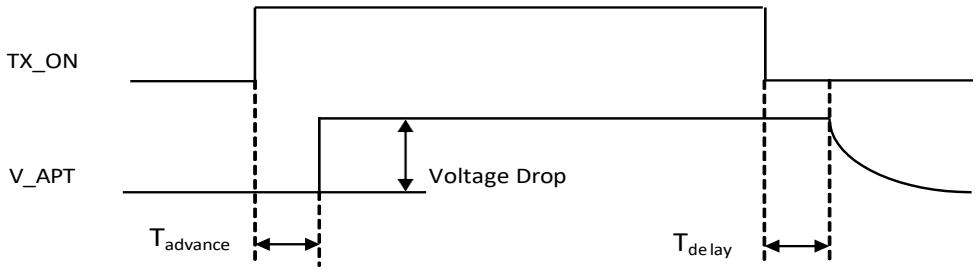

* V_APT – Internal power source for RF PA

Figure 2-10: TX_ON State During Transmission

Antenna Control

Note: Host support for antenna control signals is optional.

The EM7411 provides four output signals (listed in Table 2-10) that may be used for host designs that incorporate tunable antennas. Customers can configure these signals as appropriate for the operating band(s) using the command AT!ANTSEL.

Note:

- Lantronix, Inc. recommends that two signals be used for high bands, and the other two signals for low/mid bands.
- To avoid detuning the PCC band, customers must make sure there are no GPIO state conflicts between the PCC and SCC for all supported CA combinations.

Table 2-10: Antenna Control Signals

Name	Pin	Description
ANTCTL0	59	Customer-defined external switch controls for tunable antennas
ANTCTL1	61	
ANTCTL2	63	
ANTCTL3	65	

3: RF Specifications

The EM7411 includes three RF connectors for use with host-supplied antennas:

- Main RF connector—Tx/Rx path
- GNSS RF connector—Dedicated GPS, GLONASS, BeiDou, Galileo, and QZSS
- Auxiliary RF connector—Diversity, MIMO, GPS, GLONASS, BeiDou. Galileo, and QZSS

The module does not have integrated antennas.

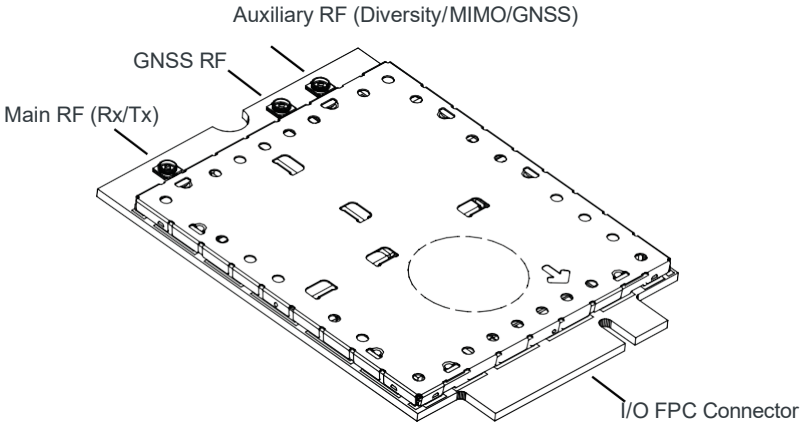

Figure 3-1: Module Connectors (Preliminary shield design, subject to change)

RF Connections

When attaching antennas to the module:

- Use RF plug connectors that are compatible with the following RF receptacle connectors: Foxconn (KK12011-02-7H), Longwell (911-002-0006R), Speedtech (C87P101-00001-H), Murata (MM4829-2702RA4 (HSC)), IPEX (20449-001E (MHF4)).
- Match coaxial connections between the module and the antenna to 50 Ω.
- Minimize RF cable losses to the antenna; the recommended maximum cable loss for antenna cabling is 0.5 dB.
- To ensure best thermal performance, use the mounting hole (if possible) to attach (ground) the device to a metal chassis.

Note: If the antenna connection is shorted or open, the modem will not sustain permanent damage.

Shielding

The module is fully shielded to protect against EMI and must not be removed.

Antenna and Cabling

When selecting the antenna and cable, it is critical to RF performance to match antenna gain and cable loss.

Note: For detailed electrical performance criteria, see Appendix A: Antenna Specification on page 60.

Choosing the Correct Antenna and Cabling

When matching antennas and cabling:

- The antenna (and associated circuitry) should have a nominal impedance of 50 Ω with a return loss of better than 10 dB across each frequency band of operation.
- The system gain value affects both radiated power *and* regulatory (FCC, IC, CE, etc.) test results.

Designing Custom Antennas

Consider the following points when designing custom antennas:

- A skilled RF engineer should do the development to ensure that the RF performance is maintained.
- If both UMTS and CDMA modules will be installed in the same platform, you may want to develop separate antennas for maximum performance.

Determining the Antenna's Location

When deciding where to put the antennas:

- Antenna location may affect RF performance. Although the module is shielded to prevent interference in most applications, the placement of the antenna is still very important—if the host device is insufficiently shielded, high levels of broadband or spurious noise can degrade the module's performance.
- Connecting cables between the module and the antenna must have 50 Ω impedance. If the impedance of the module is mismatched, RF performance is reduced significantly.
- Antenna cables should be routed, if possible, away from noise sources (switching power supplies, LCD assemblies, etc.). If the cables are near the noise sources, the noise may be coupled into the RF cable and into the antenna. See Interference from Other Wireless Devices on page 38.

Disabling the Diversity Antenna

Certification testing of a device with an integrated EM7411 may require the module's main and diversity antennas to be tested separately.

To facilitate this testing, receive diversity can be enabled/disabled using AT commands:

- !RXDEN—Used to enable/disable diversity for single-cell call (no carrier aggregation).
- !LTERXCONTROL—Used to enable/disable paths (in carrier aggregation scenarios) after a call is set up.

Important: *LTE networks expect modules to have more than one antenna enabled for proper operation. Therefore, customers must not commercially deploy their systems with the diversity antenna disabled.*

Note: A diversity antenna is used to improve connection quality and reliability through redundancy. Because two antennas may experience difference interference effects (signal distortion, delay, etc.), when one antenna receives a degraded signal, the other may not be similarly affected.

Ground Connection

When connecting the module to system ground:

- Prevent noise leakage by establishing a very good ground connection to the module through the host connector.
- Connect to system ground using the mounting hole shown in Figure 3-1 on page 36.
- Minimize ground noise leakage into the RF.
  Depending on the host board design, noise could *potentially* be coupled to the module from the host board. This is mainly an issue for host designs that have signals traveling along the length of the module, or circuitry operating at both ends of the module interconnects.

Interference and Sensitivity

Several interference sources can affect the module's RF performance (RF desense). Common sources include power supply noise and device-generated RF.

RF desense can be addressed through a combination of mitigation techniques (Methods to Mitigate Decreased Rx Performance on page 39) and radiated sensitivity measurement (Radiated Sensitivity Measurement on page 40).

Note: The EM7411 is based on ZIF (Zero Intermediate Frequency) technologies. When performing EMC (Electromagnetic Compatibility) tests, there are no IF (Intermediate Frequency) components from the module to consider.

Interference from Other Wireless Devices

Wireless devices operating inside the host device can cause interference that affects the module.

To determine the most suitable locations for antennas on your host device, evaluate each wireless device's radio system, considering the following:

- Any harmonics, sub-harmonics, or cross-products of signals generated by wireless devices that fall in the module's Rx range may cause spurious response, resulting in decreased Rx performance.
- The Tx power and corresponding broadband noise of other wireless devices may overload or increase the noise floor of the module's receiver, resulting in Rx desense.

The severity of this interference depends on the closeness of the other antennas to the module's antenna. To determine suitable locations for each wireless device's antenna, thoroughly evaluate your host device's design.

Host-generated RF Interference

All electronic computing devices generate RF interference that can negatively affect the receive sensitivity of the module.

Proximity of host electronics to the antenna in wireless devices can contribute to decreased Rx performance. Components that are most likely to cause this include:

- Microprocessor and memory
- Display panel and display drivers
- Switching-mode power supplies

Device-generated RF Interference

The module can cause interference with other devices. Wireless devices such as AirPrime embedded modules transmit in bursts (pulse transients) for set durations (RF burst frequencies). Hearing aids and speakers convert these burst frequencies into audible frequencies, resulting in audible noise.

Methods to Mitigate Decreased Rx Performance

It is important to investigate sources of localized interference early in the design cycle. To reduce the effect of device-generated RF on Rx performance:

- Put the antenna as far as possible from sources of interference. The drawback is that the module may be less convenient to use.
- Shield the host device. The module itself is well shielded to avoid external interference. However, the antenna cannot be shielded for obvious reasons. In most instances, it is necessary to employ shielding on the components of the host device (such as the main processor and parallel bus) that have the highest RF emissions.
- Filter out unwanted high-order harmonic energy by using discrete filtering on low frequency lines.
- Form shielding layers around high-speed clock traces by using multi-layer PCBs.
- Route antenna cables away from noise sources.

Radiated Spurious Emissions (RSE)

When designing an antenna for use with AirPrime embedded modules, the host device with an AirPrime embedded module must satisfy any applicable standards/local regulatory bodies for radiated spurious emission (RSE) for receive-only mode and for transmit mode (transmitter is operating).

Note that antenna impedance affects radiated emissions, which must be compared against the conducted 50 Ω emissions baseline. (AirPrime embedded modules meet the 50 Ω conducted emissions requirement.)

Radiated Sensitivity Measurement

A wireless host device contains many noise sources that contribute to a reduction in Rx performance.

To determine the extent of any receiver performance desensitization due to self-generated noise in the host device, over-the-air (OTA) or radiated testing is required. This testing can be performed by Lantronix, Inc. or you can use your own OTA test chamber for in-house testing.

Lantronix, Inc.' Sensitivity Testing and Desensitization Investigation

Although AirPrime embedded modules are designed to meet network operator requirements for receiver performance, they are still susceptible to various performance inhibitors.

As part of the Engineering Services package, Lantronix, Inc. offers modem OTA sensitivity testing and desensitization (desense) investigation. For more information, contact your account manager or the Sales Desk (see Contact Information on page 3).

Note: Lantronix, Inc. has the capability to measure TIS (Total Isotropic Sensitivity) and TRP (Total Radiated Power) according to CTIA's published test procedure.

Sensitivity vs. Frequency

For UMTS bands, sensitivity is defined as the input power level in dBm that produces a BER (Bit Error Rate) of 0.1%. Sensitivity should be measured at all UMTS frequencies across each band.

For LTE bands, sensitivity is defined as the RF level at which throughput is 95% of maximum.

Supported Frequencies

The EM7411 supports:

- Multiple-band LTE—See Table 3-1 on page 41 (supported bands) and Table 3-2 on page 41 (LTE bandwidth support).
- LTE Advanced carrier aggregation—See Table 1-2 on page 11 and Table 1-3 on page 12 for details.
- Multiple-band WCDMA/HSPA/HSPA+/DC-HSPA+—See Table 3-3 on page 42.
- Multiple-band WCDMA receive diversity
- GPS, GLONASS, BeiDou, Galileo, QZSS—See Table 3-7 on page 44.
- Inter-RAT and inter-frequency cell reselection and handover between supported frequency bands

Table 3-1: LTE Frequency Bands

Band	Frequency (Tx)	Frequency (Rx)
B2	1850–1910 MHz	1930–1990 MHz
B4	1710–1755 MHz	2110–2155 MHz
B5	824–849 MHz	869–894 MHz
B7	2500–2570 MHz	2620–2690 MHz
B12	699–716 MHz	729–746 MHz
B13	777–787 MHz	746–756 MHz
B14	788–798 MHz	758–768 MHz
B25	1850–1915 MHz	1930–1995 MHz
B26	814–849 MHz	859–894 MHz
B41	2496–2690 MHz (TDD)	
B42	3400–3600 MHz (TDD)	
B43	3600–3800 MHz (TDD)	
B48	3550–3700 MHz (TDD)	
B66	1710–1780 MHz	2110–2200 MHz
B71	663–698 MHz	617–652 MHz

Table 3-2: LTE Bandwidth Support[a]

Band	1.4 MHz	3 MHz	5 MHz	10 MHz	15 MHz	20 MHz
B2	✔	✔	✔	✔	✔[b]	✔[b]
B4	✔	✔	✔	✔	✔	✔
B5	✔	✔	✔	✔[b]	✘	✘
B7	✘	✘	✔	✔	✔[c]	✔[b,c]
B12	✔	✔	✔[b]	✔[b]	✘	✘
B13	✘	✘	✔[b]	✔[b]	✘	✘
B14	✘	✘	✔[b]	✔[b]	✘	✘
B25	✔	✔	✔	✔	✔[b]	✔[b]
B26	✔	✔	✔	✔[b]	✔[b]	✘
B41	✘	✘	✔	✔	✔	✔
B42	✘	✘	✔	✔	✔	✔
B43	✘	✘	✔	✔	✔	✔
B48	✘	✘	✔	✔	✔	✔

Table 3-2: LTE Bandwidth Support[a] (Continued)

Band	1.4 MHz	3 MHz	5 MHz	10 MHz	15 MHz	20 MHz
B66	✘	✘	✔	✔	✔	✔
B71	✘	✘	✔	✔	✔	✔

a. Table contents are derived from 3GPP TS 36.521-1 v12.6.0, table 5.4.2.1-1.
b. Bandwidth for which a relaxation of the specified UE receiver sensitivity requirement (Clause 7.3 of 3GPP TS 36.521-1 v12.6.0) is allowed.
c. Bandwidth for which uplink transmission bandwidth can be restricted by the network for some channel assignments in FDD/TDD co-existence scenarios in order to meet unwanted emissions requirements (Clause 6.6.3.2 of 3GPP TS 36.521-1 v12.6.0).

Table 3-3: WCDMA Frequency Bands Support

Band	Frequency (Tx)	Frequency (Rx)
Band 2	1850–1910 MHz	1930–1990 MHz
Band 4	1710–1755 MHz	2110–2155 MHz
Band 5	824–849 MHz	869–894 MHz

Conducted Rx Sensitivity / Tx Power

Note: Values in the following tables are preliminary, pending transceiver matching/testing.

Table 3-4: Conducted Rx (Receive) Sensitivity — LTE Bands[a]

LTE bands		Conducted Rx sensitivity (dBm)			
		Primary (Typ)	Secondary (Typ)	SIMO (Typ)	SIMO[b] (Worst case)
B2	Full RB on downlink; BW: 10 MHz[c]	-97	-97	-99.5	-94.3
B4		-97	-97	-99.5	-96.3
B5		-98.5	-99	-101.5	-94.3
B7		-97.5	-96.5	-99	-94.3
B12		-100	-99	-102	-93.3
B13		-98.5	-99	-101.5	-93.3
B14		-99.5	-99	-102.5	-93.3
B25		-97	-97	-99.5	-92.8
B26		-98	-99	-101	-93.8
B41		-96.5	-97	-99	-94.3
B42		-99	-96.5	-99	-95.0
B43		-97.5	-98	-100.5	-95.0
B48		-98	-98	-101	-95.3
B66		-97	-96.5	-99	-95.8
B71		-100	-97	-101	-93.5

a. Preliminary values, pending validation
b. Per 3GPP specification
c. Sensitivity values scale with bandwidth:
x_MHz_Sensitivity = 10_MHz_Sensitivity - 10*log(10 MHz/x_MHz)
Note: Bandwidth support is dependent on firmware version.

Table 3-5: Conducted Rx (Receive) Sensitivity — UMTS Bands[a]

UMTS bands		Conducted Rx sensitivity (dBm)		
		Primary (Typical)	Secondary (Typical)	Primary / Secondary (Worst case)[b]
Band 2	0.1% BER 12.2 kbps	-110.5	-110.5	-104.7
Band 4		-110	-100	-106.7
Band 5		-111.5	-112	-104.7

a. Preliminary values, pending validation
b. Per 3GPP specification

Table 3-6: Conducted Tx (Transmit) Power Tolerances[a]

Bands	Conducted Tx power	Notes
LTE		
LTE bands 2, 4, 25, 26, 66	22.5 dBm ± 1 dB	
LTE band 5	Single cell: 22.5 dBm ± 1 dB UL CA: 23.3 dBm ± 1 dB	0.8 dB offset for UL CA hardcoded by chipset manufacturer
LTE bands 7, 41, 42, 43, 48	Single cell: 22 dBm ± 1 dB UL CA: 22.8 dBm ± 1 dB	
LTE bands 12, 13, 14, 71	23 dBm ± 1 dB	
UMTS		
Band 2 (UMTS 1900 12.2 kbps)	23 dBm ± 1 dB	Connectorized (Class 3)
Band 4 (AWS 1700/2100 12.2 kbps)	23 dBm ± 1 dB	
Band 5 (UMTS 850 12.2 kbps)	23 dBm ± 1 dB	

a. Preliminary values, pending validation

GNSS Specifications

Note: For detailed electrical performance criteria, see *Recommended GNSS Antenna Specifications on page 62.*

.

Table 3-7: GNSS Specifications[a]

Parameter/feature	Description
Satellite channels	Maximum 30 channels (16 GPS, 14 GLONASS), simultaneous tracking
Protocols	NMEA 0183 V3.0
Acquisition time[b]	Hot start: 1 s Warm start: 29 s Cold start: 32 s
Accuracy	Horizontal: < 5 m (50%); < 9 m (95%)
Sensitivity	Tracking[c]: -160 dBm Acquisition[d] (Assisted): -158 dBm Acquisition (Standalone): -145 dBm
Operational limits	Altitude <18288 m (60,000 ft), or Velocity <1852 km/h (1000 knots) (Either limit may be exceeded, but not both.)

a. Preliminary values, pending validation
b. Acquisition times measured with signal strength = -135 dBm
c. Tracking sensitivity is the lowest GNSS signal level for which the device can still detect an in-view satellite 50% of the time when in sequential tracking mode.

d. Acquisition sensitivity is the lowest GNSS signal level for which the device can still detect an in-view satellite 50% of the time.

The module includes an internal GNSS LNA.

4: Power

Power Consumption

Power consumption measurements in the tables below are for the EM7411 connected to the host PC via USB.

The module does not have its own power source and depends on the host device for power. For a description of input voltage requirements, see Power Supply on page 25.

Table 4-1: Averaged Standby DC Power Consumption

Signal	Description	Bands[a]	Current		Notes / configuration
			Typ	Unit	
VCC	**Standby current consumption (Sleep mode activated[b])**				
	LTE	LTE bands	1.7	mA	DRX cycle = 8 (2.56 s)
	HSPA / WCDMA	UMTS bands	1.8	mA	DRX cycle = 8 (2.56 s)
	Standby current consumption[c] (Sleep mode deactivated[b])				
	LTE	LTE bands	33	mA	DRX cycle = 8 (2.56 s)
	HSPA / WCDMA	UMTS bands	33	mA	DRX cycle = 8 (2.56 s)
	Low Power Mode (LPM)/Offline Mode[c] (Sleep mode activated[b])				
	RF disabled, but module is operational		1.5	mA	
	Low Power Mode (LPM)/Offline Mode[c] (Sleep mode deactivated[b])				
	RF disabled, but module is operational		33	mA	
	Leakage current				
	Module powered off—Full_Card_Power_Off# is Low, and VCC is supplied		47	µA	

a. For supported bands, see Table 3-1, LTE Frequency Bands, on page 41 and Table 3-3, WCDMA Frequency Bands Support, on page 42.
b. Assumes USB bus is fully suspended during measurements
c. LPM and standby power consumption will increase when LEDs are enabled. To reduce power consumption, configure LEDs to remain off while in standby and LPM modes.

Table 4-2: Averaged Call Mode DC Power Consumption[a]

Description	Tx power	Current[b]		Notes
		Typ	Unit	
LTE	0 dBm	460	mA	CA 300/150 Mbps, 20 MHz+20 MHz BW
		330	mA	CA 100/25 Mbps, 10 MHz+10 MHz BW
		260	mA	150/50 Mbps, 20 MHz BW
	Max Tx power	950	mA	CA 300/150 Mbps, 20 MHz+20 MHz BW
		690	mA	CA 100/25 Mbps, 10 MHz+10 MHz BW
		820	mA	150/50 Mbps, 20 MHz BW
DC-HSPA/HSPA	0 dBm	200	mA	All speeds
	Max Tx power	520	mA	All speeds
Peak current		1.31	A	All LTE/WCDMA bands

a. Preliminary values
b. Measured at 25ºC/nominal 3.7 V voltage

Table 4-3: Miscellaneous DC Power Consumption

Signal	Description	Current / Voltage			Unit	Notes / configuration
		Min	Typ	Max		
VCC	USB active current	—	15	20	mA	High speed USB connection, C_L = 50 pF on D+ and D- signals
	Inrush current	—	2.2	2.5	A	• Assumes power supply turn on time > 100µs • Dependent on host power supply rise time.
	Maximum current	—	—	1.5	A	• Across all bands, all temperature ranges • 3.7 V supply
GNSS Signal connector	Active bias on GNSS port	—	—	100	mA	Voltage applied to the GNSS antenna to power electronics inside the antenna (GNSS RF connector in Figure 3-1 on page 36).
		3.05	3.15	3.25	V	

Warning: *The maximum RF power level allowable on any RF port is +10dBm—damage may occur if this level is exceeded.*

Module Power States

The module has five power states, as described in Table 4-4.

Table 4-4: Module Power States

State	Details	Host is powered	USB interface active	Radio enabled

Normal (Default state)	• Module is active
	• Default state. Occurs when VCC is first applied, Full_Card_Power_Off# is deasserted (pulled high), and W_DISABLE# is deasserted
	• Module is capable of placing/receiving calls, or establishing data connections on the wireless network
	• Current consumption is affected by several factors, including:
	  • Radio band being used
	  • Transmit power
	  • Receive gain settings
	  • Data rate
		✔	✔	✔

Low power ('Airplane mode')	• Module is active
	• Module enters this state:
	  • Under host interface control:
	  ▪ Host issues AT+CFUN=0 (*[1] AT Command Set for User Equipment (UE) (Release 6) (Doc# 3GPP TS 27.007)*)), or
	  ▪ Host asserts W_DISABLE#, after AT!PCOFFEN=0 has been issued.
	  • Automatically, when critical temperature or voltage trigger limits have been reached))
		✔	✔	✘

Sleep	• Normal state of module between calls or data connections • Module cycles between wake (polling the network) and sleep, at network provider-determined interval.	✔	✘ [a]	✘
Off	• Host keeps module powered off by asserting Full_Card_Power_Off# (signal pulled low or left floating) • Module draws minimal current • See Full_Card_Power_Off# and RESET# on page 32 for more information.	✔	✘ [a]	✘
Disconnected	• Host power source is disconnected from the module and all voltages associated with the module are at 0 V.	✘	✘ [b]	✘

a. USB interface is suspended
b. USB interface is disconnected

Power State Transitions

The module uses state machines to monitor supply voltage and operating temperature, and notifies the host when critical threshold limits are exceeded. (See Table 4-5 for trigger details and Figure 4-1 for state machine behavior.)

Power state transitions may occur:

- Automatically, when critical supply voltage or module temperature trigger levels are encountered.
- Under host control, using available AT commands in response to user choices (for example, opting to switch to airplane mode) or operating conditions.

Table 4-5: Power State Transition Trigger Levels

Transition	Voltage		Temperature[a]		Notes
	Trigger	V	Trigger	°C	
Normal to Low Power	VOLT_HI_CRIT	4.4	TEMP_LO_CRIT	-45	• RF activity suspended
	VOLT_LO_CRIT	3.135	TEMP_HI_CRIT	110	
Low Power to Normal	VOLT_HI_NORM	4.3	TEMP_LO_NORM	-30	• RF activity resumed
Low Power to Normal *or* Remain in Normal (Remove warnings)	VOLT_LO_NORM	3.3	TEMP_HI_NORM	70	
Normal (Issue warning)	VOLT_LO_WARN	3.2	TEMP_HI_WARN	85	• In the TEMP_HI_WARN state, the module may have reduced performance (Class B temperature range).
Power off/on (Host-initiated)	-	-	-	-	• Power off recommended when supply voltage or module operating temperature is critically low or high.

a. Module-reported temperatures at the printed circuit board.

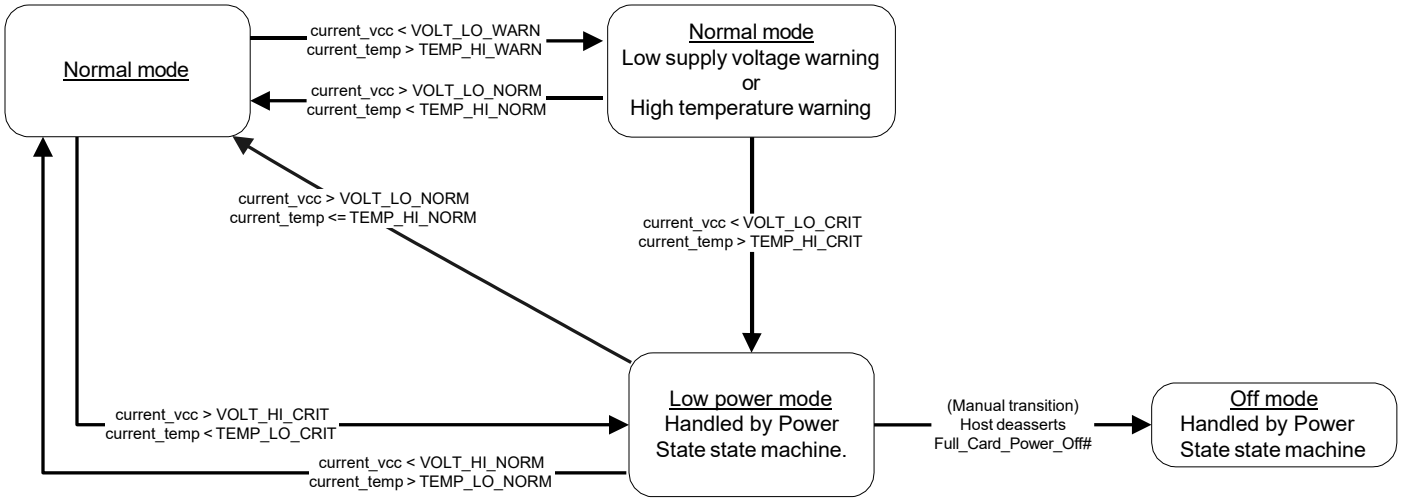

Figure 4-1: Voltage/Temperature Monitoring State Machines

Power Interface

Power Ramp-up

On initial power up, inrush current depends on the power supply rise time—turn on time >100 µs is required for < 3A inrush current.

The supply voltage must remain within specified tolerances while this is occurring.

Timing

Power On/Off Timing for the USB

Figure 4-2 describes the timing sequence for powering the module on and off.

Note: Before reaching the "Active" state, signals on the host port are considered to be undefined and signal transitions may occur. This undefined state also applies when the module is in reset mode, during a firmware update, or during the Power-off sequence. The host must consider these undefined signal activities when designing the module interface.

Note: The host should not drive any signals to the module until >100 ms from the start of the power-on sequence.

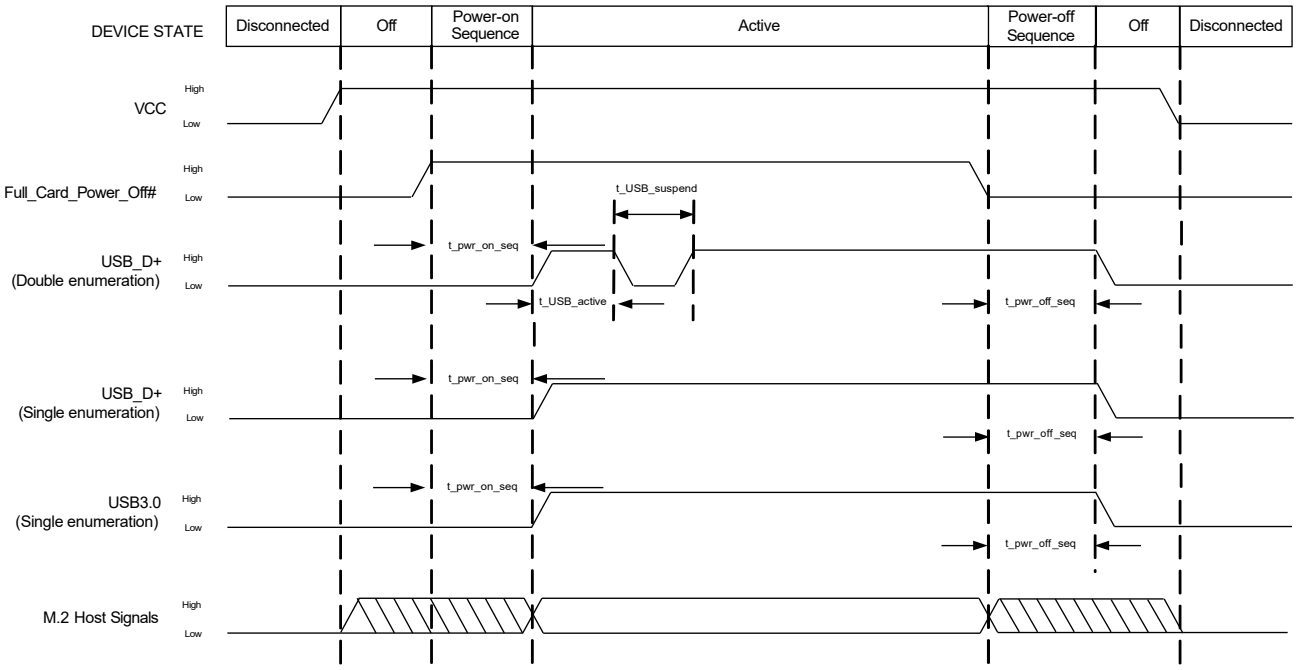

Figure 4-2: Signal Timing (Full_Card_Power_Off#, and USB Enumeration)

Table 4-6: USB 2.0 Power-On / Off Timing Parameters (Double Enumeration)

Parameter	Typical (s)	Maximum (s)
t_pwr_on_seq	0.8	0.9
t_USB_active	0.12	0.2
t_USB_suspend	8.5	11
t_pwr_off_seq	21.4	25

Table 4-7: USB 2.0 Power-On / Off Timing Parameters (Single Enumeration)

Parameter	Typical (s)	Maximum (s)
t_pwr_on_seq	8.7	11
t_pwr_off_seq	21.4	25

Table 4-8: USB 3.0 Power-On / Off Timing Parameters (Single Enumeration)

Parameter	Typical (s)	Maximum (s)
t_pwr_on_seq	8.6	11
t_pwr_off_seq	21.5	25

USB Enumeration

The unit supports single and double USB enumeration with the host:

- Single enumeration:
  - Enumeration starts within maximum t_pwr_on_seq seconds of power-on.
- Double enumeration—As shown in Figure 4-2:
  - First enumeration starts within t_pwr_on_seq seconds of power-on (while USB_D+ is high)
  - Second enumeration starts after t_USB_suspend (when USB_D+ goes high again)

Reset Timing

To reset the module, refer to Table 2-7 on page 33 for RESET# signal usage instructions.

Required Shutdown Sequence

Warning: *To avoid causing issues with the file system, follow this shutdown sequence.*

1. Drive Full_Card_Power_Off# low.
2. Wait for at least t_pwr_off_seq seconds.
3. Remove power.

Power Supply Noise

Noise in the power supply can lead to noise in the RF signal.

The power supply ripple limit for the module is no more than 100 mVp-p 1 Hz to 100 kHz. This limit includes voltage ripple due to transmitter burst activity.

Additional decoupling capacitors can be added to the main VCC line to filter noise into the device.

SED (Smart Error Detection)

The module uses a form of SED to track premature modem resets.

- Module tracks consecutive resets occurring soon after power-on.
- After a sixth consecutive reset, the module waits in boot-and-hold mode for a firmware download to resolve the power-cycle problem.

Tx Power Control

The module's Tx power limit may be controlled using either SAR backoff AT commands or the DPR (Dynamic power control) signal. Use the GPIOSARENABLE parameter for !CUSTOM to choose the method:

- AT commands:
  - !SARSTATEDFLT—Set (or report) the default SAR backoff state that the device uses when it powers up. This setting is persistent across power cycles and overrides any PRI setting.
  - !SARSTATE—Set (or report) the current SAR backoff state (override the default state). This change in state is non-persistent across power cycles.
  - !SARBACKOFF—Set (or report) the maximum Tx power limit for a specific band/ technology/state combination.

Note: A customization is available to invert the DPR logic. (e.g. make DPR low = No SAR backoff)

- Dynamic power control— The module's firmware monitors DPR (pin 25) and adjusts the RF Tx power appropriately, as detailed in Table 4-9. (This state change is equivalent to issuing the !SARSTATE AT command.)

Table 4-9: Dynamic Power Control of SAR Backoff State

DPR	SAR backoff state
High[a]	No SAR backof
Low	Backoff 1

a. DPR is pulled high by default.

Note: The host can implement an open collector drive for the DPR pin (if a 1.8 V-compatible drive is not available).

5: Software Interface

Support Tools

The EM7411 is compatible with the following support tools from Lantronix, Inc. and authorized third parties:

- Firmware update utilities from Lantronix, Inc.
- Lantronix, Inc. Logger
- QXDM from QUALCOMM
- QUALCOMM Product Support Tool (QPST)
- Windows and Linux SDKs (including API and drivers)

Host Interface

The device supports the following protocols for modem communication:

- MBIM (Mobile Broadband Interface Model)
- Qualcomm QMI interface. (Please contact your Lantronix, Inc. account representative for QMI interface documentation.)

6: Mechanical and Environmental Specifications

The EM7411 module complies with the mechanical and environmental specifications in Table 6-1. Final product conformance to these specifications depends on the OEM device implementation.

Table 6-1: Mechanical and Environmental Specifications[a]

	Mode	Details
Ambient temperature	Operational Class A	-30ºC to +70ºC – 3GPP compliant
	Operational Class B	-40ºC to +85ºC, with appropriate heatsinking—non-3GPP compliant (reduced operating parameters required)
	Storage	-40ºC to +85ºC
High temperature	Operational	85ºC, 45 minutes transmission/15 minutes idle, 480 hours
Low temperature	Operational	-40ºC, 30 minutes off/5 minutes idle, 120 hours
Relative humidity	Operational	85ºC, 85% relative humidity for 240 hours (non-condensing)
Thermal shock	Non-operational	-40ºC to 85ºC, <30 seconds transition, 10 minutes dwell, 300 cycles
Vibration	Non-operational	Tri-axial vibration, 20 to 5000 Hz, 20 Grms, 10 minutes dwell
Shock	Non-operational	Half sine shock, 6 ms, 30 g, 3x each axis
Drop	Non-operational	1 m unprotected drop on each of six faces (module only)
(Electrostatic discharge (See Electrostatic Discharge (ESD) on page 55.)	Operational	The RF port (antenna launch and RF connector) complies with the IEC 61000-4-2 standard: • Electrostatic Discharge Immunity: Test: Level3 Air Discharge: ±8 kV
	Non-operational	The host connector interface complies with the following standard only: • minimum ±500 V Human Body Model (JESD22-A114-B)
Thermal considerations		See Thermal Considerations on page 55.
Form factor		M.2 Form Factor
Dimensions		Length: 42 mm Width: 30 mm Thickness: 2.3 mm Weight: 6.6 g

a. Specifications and associated standards to be confirmed.

Electrostatic Discharge (ESD)

The OEM is responsible for ensuring that the EM7411 host interface pins are not exposed to ESD during handling or normal operation. (See Table 6-1 on page 54 for specifications.)

ESD protection is highly recommended for the SIM connector at the point where the contacts are exposed, and for any other signals from the host interface that would be subjected to ESD by the user of the product. (The device includes ESD protection on the antenna.)

Thermal Considerations

Embedded modules can generate significant amounts of heat that must be dissipated in the host device for safety and performance reasons.

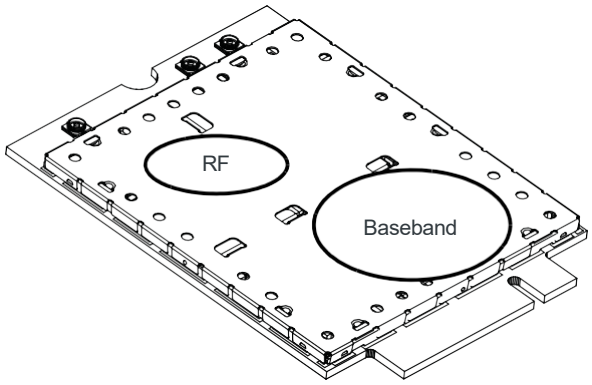

Figure 6-1: Shield Locations (Top View)

The amount of thermal dissipation required depends on:

- Supply voltage—Maximum power dissipation for the module can be up to 3.5 W at voltage supply limits.
- Usage—Typical power dissipation values depend on the location within the host, amount of data transferred, etc.

Specific areas requiring heat dissipation are shown in Figure 6-2:

- RF—Bottom face of module near RF connectors. Likely to be the hottest area.
- Baseband—Bottom face of module, below the baseband area.

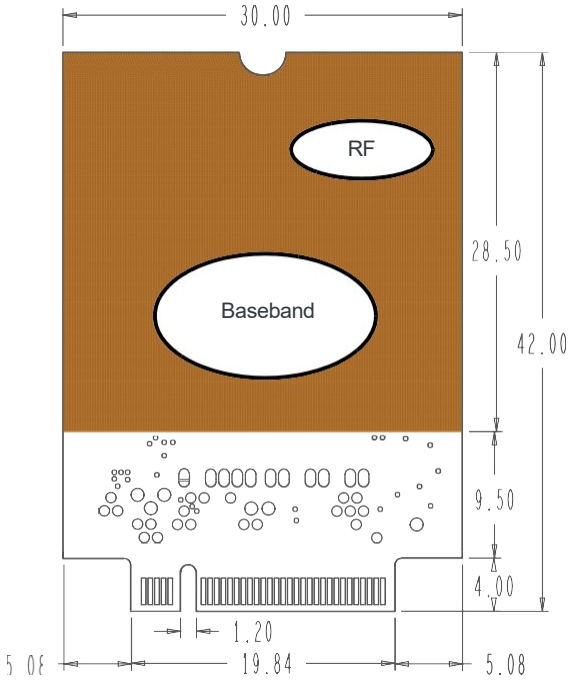

Figure 6-2: Copper Pad Location on Bottom Side of Module

To enhance heat dissipation:

- It is recommended to add a heat sink that mounts the module to the main PCB or metal chassis (a thermal compound or pads must be used between the module and the heat sink).
- Maximize airflow over/around the module.
- Locate the module away from other hot components.
- Module mounting holes must be used to attach (ground) the device to the main PCB ground or a metal chassis.
- You may also need active cooling to pull heat away from the module.

Note: Adequate dissipation of heat is necessary to ensure that the module functions properly.

Module Integration Testing

When testing your integration design:

- Test to your worst case operating environment conditions (temperature and voltage)
- Test using worst case operation (transmitter on 100% duty cycle, maximum power)
- Monitor temperature at all shield locations. Attach thermocouples to the areas indicated in Figure 6-1 on page 55 (RF, Baseband).

Note: Make sure that your system design provides sufficient cooling for the module.

(For acceptance, certification, quality, and production (including RF) test suggestions, see Testing on page 66.)

7: Regulatory Compliance and Industry Certifications

This module is designed to meet, and upon commercial release, will meet the requirements of the following regulatory bodies and regulations, where applicable:

- Federal Communications Commission (FCC) of the United States
- The Certification and Engineering Bureau of Industry Canada (IC)
- Ministry of Internal Affairs and Communications (MIC) of Japan
- Radio Equipment Directive (RED) of the European Union

The EM7411 Embedded Module complies with the mandatory requirements described in the following standards. The exact set of requirements supported is network operator-dependent.

Table 7-1: Standards Compliance

Technology	Standards
LTE	• 3GPP Release 11[a]
UMTS	• 3GPP Release 9

a. Some auxiliary functions support Release 12 or Release 13.

Upon commercial release, the following industry certifications will have been obtained, where applicable:

- GCF
- PTCRB

Additional certifications and details on specific country approvals may be obtained upon customer request—contact your Lantronix, Inc. account representative for details.

Additional testing and certification may be required for the end product with an embedded EM7411 module and are the responsibility of the OEM. Lantronix, Inc. offers professional services-based assistance to OEMs with the testing and certification process, if required.

Important Compliance Information for the United States and Canada

The EM7411 module, upon commercial release, will have been granted modular approval for mobile applications. Integrators may use the EM7411 module in their final products without additional FCC/IC (Industry Canada) certification if they meet the following conditions. Otherwise, additional FCC/IC approvals must be obtained.

1. At least 20 cm separation distance between the antenna and the user's body must be maintained at all times.
2. To comply with FCC/IC regulations limiting both maximum RF output power and human exposure to RF radiation, the maximum antenna gain including cable loss in a mobile-only exposure condition must not exceed the limits stipulated in Table 7-2.

3. The EM7411 module may transmit simultaneously with other collocated radio transmitters within a host device, provided the following conditions are met:
   - Each collocated radio transmitter has been certified by FCC/IC for mobile application.
   - At least 20 cm separation distance between the antennas of the collocated transmitters and the user's body must be maintained at all times.
   - The radiated power of a collocated transmitter must not exceed the EIRP limit stipulated in Table 7-2.

Table 7-2: Antenna Gain and Collocated Radio Transmitter Specifications

	Operating mode	Tx Freq Range (MHz)		Max Time-Avg Cond. Power (dBm)	Antenna Gain Limit (dBi)		EIRP Limits (dBm)
					Standalone	Collocated	
EM7411 Embedded Module	WCDMA Band 2, LTE B2	1850	1910	24	6	6	30
	WCDMA Band 4, LTE B4	1710	1755	24	6	6	30
	WCDMA Band 5, LTE B5	824	849	24.3	6	4	30.3
	LTE B7	2500	2570	23.8	9	4	32.8
	LTE B12	699	716	24	6	4	30
	LTE B13	777	787	24	6	4	30
	LTE B14	788	798	24	6	4	30
	LTE B25	1850	1915	24	6	6	30
	LTE B26	814	849	24	6	4	30
	LTE B41	2496	2690	23.8	9	8	32.8
	LTE B42	3400	3600	23.8	9	8	32.8
	LTE B43	3600	3800	23.8	9	8	32.8
	LTE B48[a]	3550	3700	23.8	9	8	32.8
	LTE B66	1710	1780	24	6	6	30
	LTE B71	663	698	24	6	3	30
Collocated transmitters	WLAN 2.4 GHz	2400	2500				30
	WLAN 5 GHz	5150	5850				30
	BT	2400	2500				16
	WiGig	58320	62640				25

a. **Important:** Airborne operations in LTE Band 48 are prohibited.

4. A label must be affixed to the outside of the end product into which the EM7411 module is incorporated, with a statement similar to the following:
   - **This device contains FCC ID: R68G527**
     Contains transmitter module IC: 3867A-G527

5. A user manual with the end product must clearly indicate the operating requirements and conditions that must be observed to ensure compliance with current FCC/IC RF exposure guidelines.

The end product with an embedded EM7411 module may also need to pass the FCC Part 15 unintentional emission testing requirements and be properly authorized per FCC Part 15.

Note: If this module is intended for use in a portable device, you are responsible for separate approval to satisfy the SAR requirements of FCC Part 2.1093 and IC RSS-102.

A: Antenna Specification

This appendix describes recommended electrical performance criteria for main path, diversity path, and GNSS antennas used with AirPrime embedded modules.

The performance specifications described in this section are valid while antennas are mounted in the host device with antenna feed cables routed in their final application configuration.

*Note: Antennas should be designed **before** the industrial design is finished to make sure that the best antennas can be developed*

Recommended Main/Diversity Antenna Specifications

Table A-1: Antenna Requirements [a]

Parameter	Requirements	Comments
Antenna system	(LTE) External multi-band 2x2 MIMO antenna system (Ant1/Ant2)[b] (3G) External multi-band antenna system with diversity (Ant1/Ant2)[c]	If Ant2 includes GNSS, then it must also satisfy requirements in Table A-2 on page 62.
Operating bands — Antenna 1	All supporting Tx and Rx frequency bands.	
Operating bands — Antenna 2	All supporting Rx frequency bands, plus GNSS frequency bands if Antenna 2 is used in shared Diversity/MIMO/GNSS mode.	
VSWR of Ant1 and Ant2	• < 2:1 (recommended) • < 3:1 (worst case)	On all bands including band edges
Total radiated efficiency of Ant1 and Ant2	> 50% on all bands	• Measured at the RF connector. • Includes mismatch losses, losses in the matching circuit, and antenna losses, excluding cable loss. • Lantronix, Inc. recommends using antenna efficiency as the primary parameter for evaluating the antenna system. Peak gain is not a good indication of antenna performance when integrated with a host device (the antenna does not provide omni-directional gain patterns). Peak gain can be affected by antenna size, location, design type, etc.—the antenna gain patterns remain fixed unless one or more of these parameters change.

Table A-1: Antenna Requirements (Continued)[a]

Parameter	Requirements	Comments
Radiation patterns of Ant1 and Ant2	Nominally Omni-directional radiation pattern in azimuth plane.	
Envelope correlation coefficient between Ant1 and Ant2	• < 0.5 on Rx bands below 960 MHz • < 0.2 on Rx bands above 1.4 GHz	
Mean Effective Gain of Ant1 and Ant2 (MEG1, MEG2)	≥ -3 dBi	
Ant1 and Ant2 Mean Effective Gain Imbalance I MEG1 / MEG2 I	< 2 dB for MIMO operation < 6 dB for diversity operation	
Maximum antenna gain	Must not exceed antenna gains due to RF exposure and ERP/ EIRP limits, as listed in the module's FCC grant.	See Important Compliance Information for the United States and Canada on page 57.
Isolation between Ant1 and Ant2 (S21)	> 10 dB	• If antennas can be moved, test all positions for both antennas. • Make sure all other wireless devices (Bluetooth or WLAN antennas, etc.) are turned OFF to avoid interference.
Power handling	> 1 W on high bands	• Measure power endurance over 4 hours (estimated talk time) using a 1 W CW signal—set the CW test signal frequency to the middle of each supporting Tx band. • Visually inspect device to ensure there is no damage to the antenna structure and matching components. • VSWR/TIS/TRP measurements taken before and after this test must show similar results.

a. These worst-case VSWR figures for the transmitter bands may not guarantee RSE levels to be within regulatory limits. The device alone meets all regulatory emissions limits when tested into a cabled (conducted) 50 ohm system. With antenna designs with up to 2.5:1 VSWR or worse, the radiated emissions could exceed limits. The antenna system may need to be tuned in order to meet the RSE limits as the complex match between the module and antenna can cause unwanted levels of emissions. Tuning may include antenna pattern changes, phase/delay adjustment, passive component matching. Examples of the application test limits would be included in FCC Part 22, Part 24 and Part 27,test case 4.2.2 for WCDMA (ETSI EN 301 908-1), where applicable.
b. Ant1—Primary, Ant2—Secondary (Diversity/MIMO/GNSS)
c. Ant1—Primary, Ant2—Secondary (Diversity/GNSS)

Recommended GNSS Antenna Specifications

Table A-2: GNSS Antenna Requirements

Parameter	Requirements	Comments
Frequency range	• Wide-band GNSS: 1559–1606 MHz recommended • Narrow-band GPS: 1575.42 MHz ±2 MHz minimum • Narrow-band Galileo: 1575.42 MHz ±2 MHz minimum • Narrow-band BeiDou: 1561.098 MHz ±2 MHz minimum • Narrow-band GLONASS: 1601.72 MHz ±4.2 MHz minimum • Narrow-band QZSS: 1575.42 MHz ±2 MHz minimum	
Field of view (FOV)	• Omni-directional in azimuth • -45° to +90° in elevation	
Polarization (average Gv/Gh)	> 0 dB	Vertical linear polarization is sufficient.
Free space average gain (Gv+Gh) over FOV	> -6 dBi (preferably > -3 dBi)	Gv and Gh are measured and averaged over -45° to +90° in elevation, and ±180° in azimuth.
Gain	• Maximum gain and uniform coverage in the high elevation angle and zenith. • Gain in azimuth plane is not desired.	
Average 3D gain	> -5 dBi	
Isolation between GNSS and Ant1	• All uplink bands: > 10 dB • To mitigate GNSS and LTE B13/B14 co-existence: > 20 dB	
Typical VSWR	< 2.5:1	
Polarization	Any other than LHCP (left-hand circular polarized) is acceptable.	

Antenna Tests

The following guidelines apply to the requirements described in Table A-1 on page 60 and Table A-2 on page 62:

- Perform electrical measurements at room temperature (+20°C to +26°C) unless otherwise specified
- For main and diversity path antennas, make sure the antennas (including contact device, coaxial cable, connectors, and matching circuit with no more than six components, if required) have nominal impedances of 50 Ω across supported frequency bands.

- All tests (except isolation/correlation coefficient)—Test the main or diversity antenna with the other antenna terminated.
- Any metallic part of the antenna system that is exposed to the outside environment needs to meet the electrostatic discharge tests per IEC61000-4-2 (conducted discharge +8kV).
- The functional requirements of the antenna system are tested and verified while the embedded module's antenna is integrated in the host device.

Note: Additional testing, including active performance tests, mechanical, and accelerated life tests can be discussed with Lantronix, Inc.' engineering services. Contact your Lantronix, Inc. representative for assistance.

B: Design Checklist

This chapter provides a summary of the design considerations mentioned throughout this guide. This includes items relating to the power interface, RF integration, thermal considerations, cabling issues, and so on.

Note: This is NOT an exhaustive list of design considerations. It is expected that you will employ good design practices and engineering principles in your integration.

Table B-1: Hardware Integration Design Considerations

Suggestion	Section where discussed
Component placement	
If an ESD suppressor is not used on the host device, allow space on the SIM connector for series resistors in layout. (Up to 100 Ω may be used depending on ESD testing requirements).	SIM Implementation on page 29
Minimize RF cable losses as these affect performance values listed in product specification documents.	RF Connections on page 36
Antennas	
Match the module/antenna coax connections to 50 Ω—mismatched antenna impedance and cable loss negatively affect RF performance.	RF Connections on page 36
If installing UMTS and CDMA modules in the same device, consider using separate antennas for maximum performance.	Antenna and Cabling on page 37
Power	
Make sure the power supply can handle the maximum current specified for the module type.	Power Consumption on page 46
Limit the total impedance of VCC and GND connections to the SIM at the connector to less than 1 Ω (including any trace impedance and lumped element components—inductors, filters, etc.). All other lines must have a trace impedance less than 2 Ω.	SIM Implementation on page 29
Decouple the VCC line close to the SIM socket. The longer the trace length (impedance) from socket to module, the greater the capacitance requirement to meet compliance tests.	SIM Implementation on page 29
PCB signal routing	
USB 2.0/3.0—Route these signals over 90 Ω differential lines on the PCB.	
I2C port—If supported, route these signals away from noise-sensitive signals on the PCB.	
PCM port—If supported, route these signals away from noise-sensitive signals on the PCB.	
EMI/ ESD	
Investigate sources of localized interference early in the design cycle.	Methods to Mitigate Decreased Rx Performance on page 39

Table B-1: Hardware Integration Design Considerations (Continued)

Suggestion	Section where discussed
If there is any potential ESD exposure to the primary antenna port, add 39 nH shunt induction to Ground as close as possible to the external connection.	
Provide ESD protection for the SIM connector at the exposed contact point (in particular, the CLK, VCC, IO, and RESET# lines).	SIM Implementation on page 29
Keep very low capacitance traces on the UIM_DATA and UIM_CLK signals.	SIM Implementation on page 29
To minimize noise leakage, establish a very good ground connection between the module and host.	Ground Connection on page 38
Route cables away from noise sources (for example, power supplies, LCD assemblies, etc.).	Methods to Mitigate Decreased Rx Performance on page 39
Shield high RF-emitting components of the host device (for example, main processor, parallel bus, etc.).	Methods to Mitigate Decreased Rx Performance on page 39
Use discrete filtering on low frequency lines to filter out unwanted high-order harmonic energy.	Methods to Mitigate Decreased Rx Performance on page 39
Use multi-layer PCBs to form shielding layers around high-speed clock traces.	Methods to Mitigate Decreased Rx Performance on page 39
Thermal	
Test to worst case operating conditions—temperature, voltage, and operation mode (transmitter on 100% duty cycle, maximum power).	Thermal Considerations on page 55
Use appropriate techniques to reduce module temperatures (for example, airflow, heat sinks, heat-relief tape, module placement, etc.).	Thermal Considerations on page 55
Host / Modem communication	
Make sure the host USB driver supports remote wakeup, resume, and suspend operations, and serial port emulation.	*[4] AirCard/AirPrime USB Driver Developer's Guide (Doc# 2130634)*
When no valid data is being sent, do not send SOF tokens from the host (causes unnecessary power consumption).	*[4] AirCard/AirPrime USB Driver Developer's Guide (Doc# 2130634)*

C: Testing

Note: All AirPrime embedded modules are factory-tested to ensure they conform to published product specifications.

Developers of OEM devices integrating Lantronix, Inc. AirPrime embedded modules should include a series of test phases in their manufacturing process to make sure that *their* devices work properly with the embedded modules.

Suggested phases include:

- Acceptance Testing—Testing of modules when they are received from Lantronix, Inc.
- Certification Testing—Testing of completed devices to obtain required certifications before beginning mass production
- Production Testing—Testing of completed devices with the modules embedded
- Quality Assurance Testing—Post-production

AT Command Entry Timing Requirement

Some AT commands require time to process before additional commands are entered. For example, the modem will return “OK” when it receives AT!DAFTMACT. However, if AT!DARCONFIG is received too soon after this, the modem will return an error.

When building automated test scripts, ensure that sufficient delays are embedded where necessary to avoid these errors.

Acceptance Testing

*Note: Acceptance testing is typically performed for **each** shipment received.*

When you receive a shipment from Lantronix, Inc., you should make sure it is suitable before beginning production.

From a random sampling of units, test that:

- Units are operational
- Units are loaded with the correct firmware version

Acceptance Test Requirements

To perform the suggested tests, you require a test system in which to temporarily install the module, and you must be able to observe the test device’s LED indicator.

Acceptance Test Procedure

The following is a suggested acceptance testing procedure using Lantronix, Inc.' Skylight™ software:

Note: You can perform these tests using appropriate AT commands.

Test 1: Check Power-up and Initialization

1. After installing the module, start the test system.
2. Launch Skylight.
3. Check the LED—If the LED is off, there is a problem with the module or with the connection to the LED.

Test 2: Check Version Numbers

1. From Skylight, select **Help > About**.
2. Verify that the firmware version in the **About** window is correct.
3. Close the **About** window.

If the module fails either of these tests, or is not recognized by Skylight:

1. Replace the module with one that is known to work correctly and repeat the tests.
2. If the tests are successful, reinstall the original module and repeat the tests.

If the module still does not work correctly, contact your account manager.

Certification Testing

Note: Typically, certification testing of your device with the integrated module is required one time only.

The AirPrime embedded module has been certified as described in Regulatory Compliance and Industry Certifications on page 57.

When you produce a host device with a Lantronix, Inc. AirPrime embedded module, you must obtain certifications for the final product from appropriate regulatory bodies in the jurisdictions where it will be distributed.

The following are *some* of the regulatory bodies from which you may require certification—it is your responsibility to make sure that you obtain all necessary certifications for your product from these or other groups:

- FCC (Federal Communications Commission—www.fcc.gov)
- Industry Canada (www.ic.gc.ca)
- GCF (Global Certification Forum—www.globalcertificationforum.org) outside of North America
- PTCRB (PCS Type Certification Review Board—www.ptcrb.com) in North America

Production Testing

Note: Production testing typically continues for the life of the product.

Production testing ensures that, for each assembled device, the module is installed correctly (I/O signals are passed between the host and module), and the antenna is connected and performing to specifications (RF tests).

Typical items to test include:
- Host connectivity
- Baseband (host/module connectors)
- RF assembly (Tx and/or Rx, as appropriate)
- Network availability
- Host/device configuration issues

*Note: The number and types of tests to perform are **your** decision—the tests listed in this section are guidelines only. Make sure that the tests you perform exercise functionality to the degree that **your** situation requires.*

Use an appropriate test station for your testing environment (see Acceptance Test Requirements on page 66 for suggestions) and use AT commands to control the integrated module.

Note: Your test location must be protected from ESD to avoid interference with the module and antenna(s), assuming that your test computer is in a disassembled state.
Also, consider using an RF shielding box—local government regulations may prohibit unauthorized transmissions.

Functional Production Test

This section presents a suggested procedure for performing a basic manual functional test on a laboratory bench using an EM7411 Embedded Module and a hardware development kit. When you have become familiar with the testing method, use it to develop your own automated production testing procedures.

Suggested Production Tests

Consider the following tests when you design your production test procedures for devices with the AirPrime module installed.
- Visual check of the module's connectors and RF assemblies
- Module is operational
- USB connection is functional
- LED is functional
- Power on/off
- Firmware revision check
- Rx tests on main and auxiliary paths
- Tx test

Production Test Procedure

The following is a suggested test plan—you must decide which tests are appropriate for your product. You may wish to add additional tests that more fully exercise the capabilities of your product.

Using an appropriate Dev Kit-based test station, and referring to the appropriate AT command references:

1. Visually inspect the module's connectors and RF assemblies for obvious defects before installing it in the test station.
2. Ensure that the module is turned off before beginning your tests—Drive Full_-Card_Power_Off# low or leave floating.
3. Test Full_Card_Power_Off#—Turn on the module by driving Full_Card_Power_Off# high.
4. Test USB functionality—Check for USB enumeration.
   - (Windows systems) The Device Manager shows the device under Network adapters. For example:

5. Make sure your modem is connected and running, and then establish contact with the module:
   - Windows systems: Use a terminal emulation/communications program such as Microsoft HyperTerminal® to connect to the Lantronix, Inc. modem (see listings in Step 4):

   a. Start HyperTerminal.

   b. Select **File > Connection Description**. The Connection Description dialog box appears.

      i. Type in the Name box and click **OK**. The Connect To dialog box appears.

      ii. Click **OK** without changing any of the displayed information. The Connect dialog box appears.

      iii. Click **Cancel**.

      *Note: If necessary, use **ATE1** to enable echo.*

      iv. Type ATZ in the HyperTerminal window. If the connection is established, the message OK appears.

6. Display the firmware version:
   - **AT+GMR**
7. Test the LED—Set the LED in blinking mode using this command, then visually verify that the LED turns off and on:
   - **AT!LDTEST=0,0** (LED on)
   - **AT!LDTEST=0,1** (LED off)

8. Unlock the extended AT command set. (Note: Use AT!ENTERCND? to check command syntax, which is SKU-dependent.):
   - **AT!ENTERCND="<password>"**
9. Put the module in diagnostic/factory test mode:
   - **AT!DAFTMACT**
10. Communicate with the SIM using **+CPIN** or **+CIMI**.
    When performing RF tests, use a test platform as described in Suggested Testing Equipment on page 79.
11. Test RF transmission, if desired:
    - (UMTS) See UMTS (WCDMA) RF Transmission Path Test on page 70.
    - (LTE) See LTE RF Transmission Path Test on page 72
12. Test RF reception, if desired:
    - (UMTS) See UMTS (WCDMA) RF Receive Path Test on page 74.
    - (LTE) See LTE RF Receive Path Test on page 76.
13. Test standalone GNSS functionality—See GNSS RF Receive Path Test on page 78.
14. Drive Full_Card_Power_Off# low (or leave floating) and confirm that the module powers down:
    - Windows systems—The Lantronix, Inc. items under the Ports (COM & LPT) entry in Device Manager disappear as the module powers off.

UMTS (WCDMA) RF Transmission Path Test

Note: This procedure segment is performed in Step 11 of the Production Test Procedure on page 69.

The suggested test procedure that follows uses the parameters in Table 3-1.

Table 3-1: Test Settings — UMTS Transmission Path

	Band	Frequency (MHz)	Band ID	Channel[a]
1900 MHz	Band 2	1880.0	15[b]	9400
1700 MHz	Band 4	1732.6	28	1413
850 MHz	Band 5	836.6	22	4183

a. Channel values shown are at the center of the corresponding bands.
Channel value used by the !DARCONFIG command (!DARCONFIG uses uplink (Tx) channel at the center of the corresponding band (rounded down), for both Tx and Rx testing).
b. Either 15 (WCDMA1900A) or 16 (WCDMA1900B) may be used for testing.

To test the DUT's transmitter path:

1. Set up the power meter:

Note: This procedure describes steps using the "Power Meter: Gigatronics 8651A" (with Option 12 and Power Sensor 80701A).

   a. Make sure the meter has been given sufficient time to warm up, if necessary, to enable it to take accurate measurements.
   b. Zero-calibrate the meter.
   c. Enable MAP mode.

2. Prepare the DUT using the following AT commands:
   a. **AT!ENTERCND="<password>"** (Unlock extended AT command set.)
   b. **AT!DAFTMACT** (Enter test mode.)
   c. **AT!DARCONFIG=0,1,<bandValue>,<channel>**
      (e.g. AT!DARCONFIG=0,1,2,9400)
      (Set frequency band and channel.
      See Table 3-1 for values.)
   d. **AT!DAWTXCONTROL=1,<power_dBm>**
      (e.g. AT!DAWTXCONTROL=1,10)
      (Enable Tx power output.
      <power_dBm> = -57.0 to 23.0)
   e. Take the measurement.
   f. Repeat steps c–e with different Tx power levels if needed.
   g. **AT!DAWTXCONTROL=0** (Disable Tx power output.)
   h. **AT!DARCONFIGDROP=1** (Drop the current UMTS configuration.)

3. Test limits—Run ten or more good DUTs through this test procedure to obtain a nominal output power value.
   - Apply a tolerance of ±5 to 6 dB to each measurement (assuming a good setup design).
   - Monitor these limits during mass-production ramp-up to determine if further adjustments are needed.

Note: The module has a nominal output power of +23 dBm ±1 dB in WCDMA mode. However, the value measured by the power meter is significantly influenced (beyond the stated ±1 dB output power tolerance) by the test setup (host RF cabling loss, antenna efficiency and pattern, test antenna efficiency and pattern, and choice of shield box).

Note: When doing the same test over the air in an RF chamber, values are likely to be significantly lower.

LTE RF Transmission Path Test

Note: This procedure segment is performed in Step 11 of the Production Test Procedure on page 69.

The suggested test procedure that follows uses the parameters in Table 3-2..

Table 3-2: Test Settings — LTE Transmission Path

	Band #	Frequency (MHz)	Band ID	Channel[a]
1900 MHz	B2	1880.0	43	18900
1700 MHz	B4	1732.5	42	20175
850 MHz	B5	836.5	45	20525
2600 MHz	B7	2535.0	35	21100
700 MHz	B12	707.5	50	23095
700 MHz	B13	782.0	36	23230
700 MHz	B14	793.0	51	23330
1900 MHz	B25	1882.5	61	26365
850 MHz	B26	831.5	62	26865
2500 MHz	B41	2593.0	76	40620
3500 MHz	B42	3500.0	77	42590
3700 MHz	B43	3700.0	88	44590
3600 MHz	B48	3625.0	96	55990
1700 MHz	B66	1745.0	83	132322
600 MHz	B71	680.5	97	133297

a. Channel value used by the !DARCONFIG command (!DARCONFIG uses uplink (Tx) channel at the center of the corresponding band (rounded down), for both Tx and Rx testing).

To test the DUT's transmitter path:

1. Set up the power meter:

Note: This procedure describes steps using the "Power Meter: Gigatronics 8651A" (with Option 12 and Power Sensor 80701A).

   a. Make sure the meter has been given sufficient time to warm up, if necessary, to enable it to take accurate measurements.
   b. Zero-calibrate the meter.
   c. Enable MAP mode.

2. Prepare the DUT using the following AT commands:
   a. AT!ENTERCND="<password>" (Unlock extended AT command set.)
   b. AT!DAFTMACT (Enter test mode.)
   c. AT!DARCONFIG=0,3,<bandValue>,<channel>,<lte_bw>
      (e.g. AT!DARCONFIG=0,3,1,18300,3)
      (Set frequency band and channel. See Table 3-1 for values. <lte_bw>: 0 (1.4 MHz), 1 (3 MHz), 2 (5 MHz), 3 (10 MHz), 4 (15 MHz), 5(20 MHz))
   d. AT!DALTXCONTROL=0,1,<tx_pwr>,<waveform>,<mod>,<ns_val>,<num_RB>,<start_RB>
      (e.g. AT!DALTXCONTROL=0,1,10,1,0,1,12,19)
      (Set LTE Tx power level, waveform, modulation and NS value. Programs PA range, LUT index, and digital gain to reach Tx power level with power limiting enabled.)
   e. Take the measurement.
   f. Repeat steps c–e with different Tx power levels if desired.
   g. AT!DALTXCONTROL=0,0 (Disable Tx power control.)
   h. AT!DARCONFIGDROP=3 (Drop the current LTE configuration.)

3. Test limits—Run ten or more good DUTs through this test procedure to obtain a nominal output power value.
   - Apply a tolerance of ±5 to 6 dB to each measurement (assuming a good setup design).
   - Monitor these limits during mass-production ramp-up to determine if further adjustments are needed.

Note: The module has a nominal output power of +23 dBm ±1 dB in LTE mode. However, the value measured by the power meter is significantly influenced (beyond the stated ±1 dB output power tolerance) by the test setup (host RF cabling loss, antenna efficiency and pattern, test antenna efficiency and pattern, and choice of shield box).

Note: When doing the same test over the air in an RF chamber, values are likely to be significantly lower.

UMTS (WCDMA) RF Receive Path Test

Note: This procedure segment is performed in Step 12 of Production Test Procedure on page 69.

The suggested test procedure that follows uses the parameters in Table 3-3.

Table 3-3: Test Settings — UMTS Receive Path

	Band #	Frequency[a] (MHz)	Band ID	Channel[b]
1900 MHz	Band 2	1961.2	15[c]	9400
1700 MHz	Band 4	2133.7	28	1413
850 MHz	Band 5	882.7	22	4183

a. Receive frequencies shown are 1.2 MHz offset from center
b. Channel value used by the !DARCONFIG command (!DARCONFIG uses uplink (Tx) channel at the center of the corresponding band (rounded down), for both Tx and Rx testing).
c. Either 15 (WCDMA1900A) or 16 (WCDMA1900B) may be used for testing.

To test the DUT's receive path:

1. Set up the signal generator:

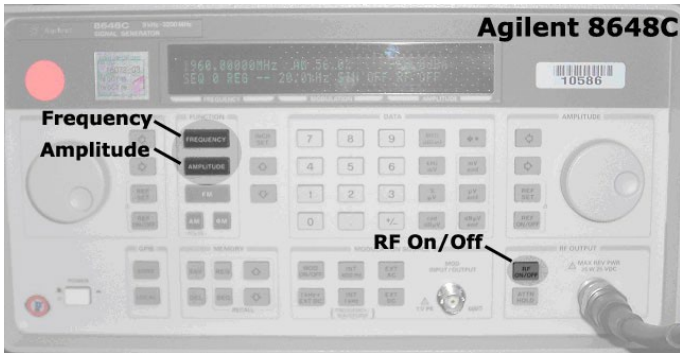

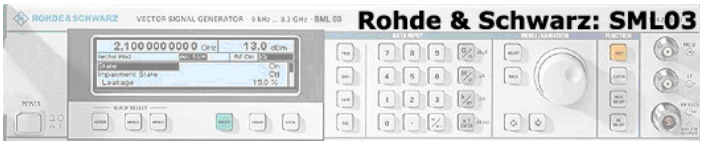

Note: This procedure describes steps using the Agilent 8648C signal generator—the Rohde & Schwarz SML03 is shown for reference only.

a. Set the amplitude to:
   - -80 dBm

b. Set the frequency for the band being tested. See Table 3-3 on page 74 for frequency values.

2. Set up the DUT:

Warning: *The maximum RF power level allowable on any RF port is +10dBm—damage may occur if this level is exceeded.*

a. **AT!ENTERCND="<password>"** (Unlock extended AT command set.)

b. **AT!DAFTMACT** (Put modem into factory test mode.)

c. **AT!DARCONFIG=0,1,<bandValue>,<channel>**
(e.g. AT!DARCONFIG=0,1,2,9400)
(Set frequency band and channel. See Table 3-3 for values.)

d. **AT!DAGFTMRXAGC=0,1,0,0**
(Set LNA to maximum gain on primary Rx, and get the RSSI.)

e. **AT!DAGFTMRXAGC=0,1,0,1** (Set LNA to maximum gain on Diversity Rx, and get the RSSI.)

f. **AT!DARCONFIGDROP=1** (Drop the current UMTS configuration.)

3. Test limits—Run ten or more good DUTs through this test procedure to obtain a nominal received power value.
   - Apply a tolerance of ±5 to 6 dB to each measurement (assuming a good setup design).
   - Make sure the measurement is made at a high enough level that it is not influenced by DUT-generated and ambient noise.
   - The Signal Generator power level can be adjusted and new limits found if the radiated test needs greater signal strength.
   - Monitor these limits during mass-production ramp-up to determine if further adjustments are needed.

Note: The value measured from the DUT is significantly influenced by the test setup and DUT design (host RF cabling loss, antenna efficiency and pattern, test antenna efficiency and pattern, and choice of shield box).

LTE RF Receive Path Test

Note: This procedure segment is performed in Step 12 of the Production Test Procedure on page 69.

The suggested test procedure that follows uses the parameters in Table 3-4.

Table 3-4: Test Settings — LTE Receive Path

	Band #	Frequency[a] (MHz)	Band ID	Channel[b]
1900 MHz	B2	1962.0	43	18900
1700 MHz	B4	2134.5	42	20175
850 MHz	B5	883.5	45	20525
2600 MHz	B7	2657.0	35	21100
700 MHz	B12	739.5	50	23095
700 MHz	B13	753.0	36	23230
850 MHz	B14	765	51	23330
1900 MHz	B25	1964.5	61	26365
850 MHz	B26	878.5	62	26865
2500 MHz	B41	2595.0	76	40620
3500 MHz	B42	3502.0	77	42590
3700 MHz	B43	3702.0	88	44590
3600 MHz	B48	3627.0	96	55990
1700 MHz	B66	2157.0	83	132322
600 MHz	B71	636.5	97	133297

a. Receive frequencies shown are 2 MHz offset from center
b. Channel value used by the !DARCONFIG command (!DARCONFIG uses uplink (Tx) channel at the center of the corresponding band (rounded down), for both Tx and Rx testing).

To test the DUT's receive path (or diversity path, while connected to the diversity antenna):

1. Set up the signal generator:

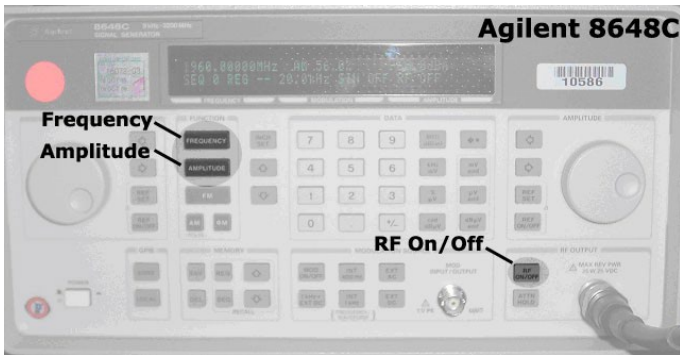

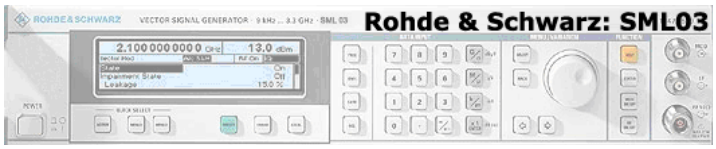

Note: This procedure describes steps using the Agilent 8648C signal generator—the Rohde & Schwarz SML03 is shown for reference only.

   a. Set the amplitude to -70 dBm
   b. Set the frequency for the band being tested. See Table 3-4 for frequency values.

2. Set up the DUT:

Warning: *The maximum RF power level allowable on any RF port is +10dBm—damage may occur if this level is exceeded.*

   a. **AT!ENTERCND="<password>"** (Unlock extended AT command set.)
   b. **AT!DAFTMACT** (Put modem into factory test mode.)
   c. **AT!DARCONFIG=0,3,<bandValue>,<channel>,<lte_bw>**
      (e.g. AT!DARCONFIG=0,3,1,18300,3)
      (Set frequency band and channel. See Table 3-4 for values. <lte_bw>: 0 (1.4 MHz), 1 (3 MHz), 2 (5 MHz), 3 (10 MHz), 4 (15 MHz), 5(20 MHz))
   d. **AT!DAGFTMRXAGC=0,3,0,0** (Set LNA to maximum gain on primary Rx, and get the RSSI.)
   e. **AT!DAGFTMRXAGC=0,3,0,1** (Set the LNA to maximum gain on Diversity Rx, and get the RSSI.)
   f. **AT!DARCONFIGDROP=0,3** (Drop the current LTE configuration.)

3. Test limits—Run ten or more good DUTs through this test procedure to obtain a nominal received power value.
   - Apply a tolerance of ±5 to 6 dB to each measurement (assuming a good setup design).
   - Make sure the measurement is made at a high enough level that it is not influenced by DUT-generated and ambient noise.

- The Signal Generator power level can be adjusted and new limits found if the radiated test needs greater signal strength.
- Monitor these limits during mass-production ramp-up to determine if further adjustments are needed.

Note: The value measured from the DUT is significantly influenced by the test setup and DUT design (host RF cabling loss, antenna efficiency and pattern, test antenna efficiency and pattern, and choice of shield box).

GNSS RF Receive Path Test

The GNSS receive path uses either the dedicated GNSS connector or the shared Diversity/MIMO/GNSS connector.

To test the GNSS receive path:

1. Inject a carrier signal at -110 dBm, frequency 1575.52 MHz into the GNSS Rx path at the connector. (Note that this frequency is 100 kHz higher than the actual GPS L1 center frequency.)
2. Test the signal carrier-to-noise level at the GNSS receiver:
   a. AT!ENTERCND="<password>" (Unlock extended AT command set.)
   b. AT!DAFTMACT (Put modem into factory test mode.)
   c. AT!DACGPSTESTMODE=1 (Start CGPS diagnostic task.)
   d. AT!DACGPSSTANDALONE=1 (Enter standalone RF mode.)
   e. AT!DACGPSMASKON (Enable log mask.)
   f. AT!DACGPSCTON (Return signal-to-noise and frequency measurements.)
   g. Repeat AT!DACGPSCTON five to ten times to ensure the measurements are repeatable and stable.
3. Leave the RF connection to the embedded module intact, and turn off the signal generator.
4. Take several more !DACGPSCTON readings. This will demonstrate a 'bad' signal in order to set limits for testing, if needed. This frequency offset should fall outside of the guidelines in the note below, which indicates that the CtoN result is invalid.
5. (Optional) Turn the signal generator on again, and reduce the level to -120dBm. Take more !DACGPSCTON readings and use these as a reference for what a marginal/poor signal would be.

Note: The response to AT!DACGPSCTON for a good connection should show CtoN within 58 +/- 5dB and Freq (frequency offset) within 100000 Hz +/- 5000 Hz .

Quality Assurance Testing

Note: QA is an ongoing process based on random samples from a finished batch of devices.

The quality assurance tests that you perform on your finished products should be designed to verify the performance and quality of your devices.

The following are *some* testing suggestions that can confirm that the antenna is interfaced properly, and that the RF module is calibrated and performs to specifications:

- Module registration on cellular networks
- Power consumption
- Originate and terminate data and voice (if applicable) calls
- Cell hand-off
- Transmitter and receiver tests
- FER (Frame Error Rate) as an indicator of receiver sensitivity/performance
- Channel and average power measurements to verify that the device is transmitting within product specifications
- RF sensitivity tests
- RF sensitivity testing—BER/BLER for different bands and modes
- Transmitter and receiver tests (based on relevant sections of the 3GPP TS51010 and 3GPP 34121 documents)

Suggested Testing Equipment

To perform production and post-production tests, you will require appropriate testing equipment. A test computer can be used to coordinate testing between the integrated module (on the development kit or host) and the measurement equipment, usually with GPIB connections. The suggested setup includes a power meter to test RF output power and a signal generator to evaluate the receiver.

Testing Assistance Provided by Lantronix, Inc.

Extended AT commands have been implemented to assist with performing FTA GCF tests and portions of CE Mark tests requiring radio module access. These are documented in the *[2] AirPrime EM75xx and EM/MC74x1 AT Command Reference (Doc# 41111748)*.

Lantronix, Inc. offers optional professional services based assistance to OEMs with regulatory approvals.

IOT/Operator Testing

Interoperability and Operator/Carrier testing of the finished system is the responsibility of the OEM. The test process will be determined with the chosen network operator(s) and will be dependent upon your business relationship with them, as well as the product's application and sales channel strategy.

Lantronix, Inc. offers assistance to OEMs with the testing process, if required.

Extended AT Commands for Testing

Lantronix, Inc. provides the *[2] AirPrime EM75xx and EM/MC74x1 AT Command Reference (Doc# 41111748)*, which describes proprietary AT commands that may help in hardware integration design and testing (these commands are NOT intended for use by end users).

Some commands from this document that may be useful for hardware integration are listed in Table 3-5 on page 80.

Table 3-5: Extended AT Commands

Command	Description
Password commands	
!ENTERCND	Enable access to password-protected commands
!SETCND	Set AT command password
Modem reset and status commands	
!GSTATUS	Return the operation status of the modem (mode, band, channel, and so on)
!RESET	Reset the modem
Diagnostic commands	
!BAND	Select a set of frequency bands or reports current selection
Test commands	
!DAFTMACT	Put the modem into FTM (Factory Test Mode)
!DAFTMDEACT	Put the modem into online mode
!DAGFTMRXAGC	Get FTM Rx AGC (Primary or Diversity)
!DALGRXAGC	Return Rx AGC value (LTE)
!DALGTXAGC	Return Tx AGC value and transmitter parameters (LTE)
!DALTXCONTROL	Configure LTE Tx Parameters
!DAOFFLINE	Place modem offline
!DARCONFIG	Set Band and Channel
!DARCONFIGDROP	Drop Radio Configurations
!DASLNAGAIN	Set the LNA (Low Noise Amplifier) gain state
!DAWGAVGAGC	Return averaged RX AGC value (WCDMA)
!DAWINFO	Return WCDMA mode RF information
!DAWTXCONTROL	Configure WCDMA Tx Power

D: Packaging

Lantronix, Inc. AirPrime Embedded Modules are shipped in sealed boxes. The standard packaging (see Figure 4-1), contains a single tray with a capacity of 100 modules. (Note that some SKUs may have custom packaging—contact Lantronix, Inc. for SKU-specific details.)

In the standard packaging, Embedded Modules are inserted, system connector first, into the bottom portion (T1) of a two-part tray. all facing the same direction. This allows the top edge of each Embedded Module to contact the top of the triangular features in the top portion (T2) of the tray (see Detail A).

The top and bottom portions of the tray snap together at the four connection points.

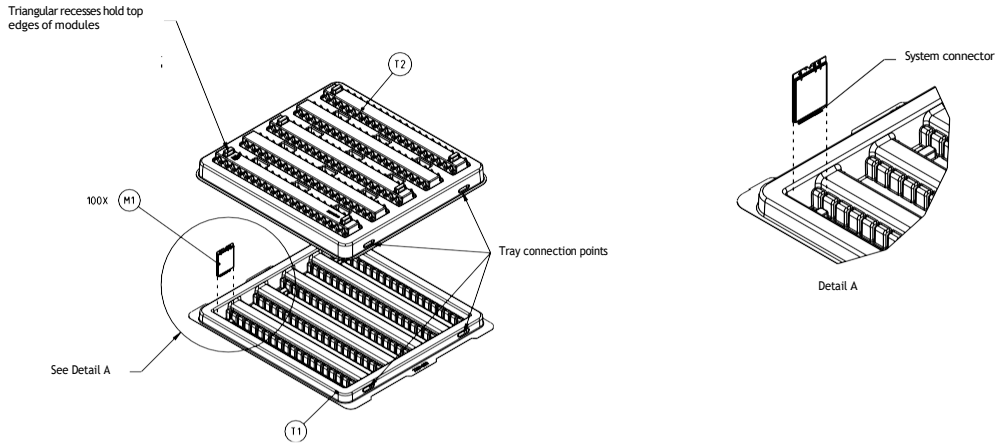

Figure 4-1: Device Placement in Module Tray

The tray cover is secured to the tray base with ESD-safe tape (EP1) at the locations indicated. The tray is placed in a manufacturing box(B1), sealed with a security tape (P1), a manufacturing label (L3) is placed on the bottom-right corner, above the security tape, and if required a label (L4) is applied beside the manufacturing label. (See Figure 4-2.)

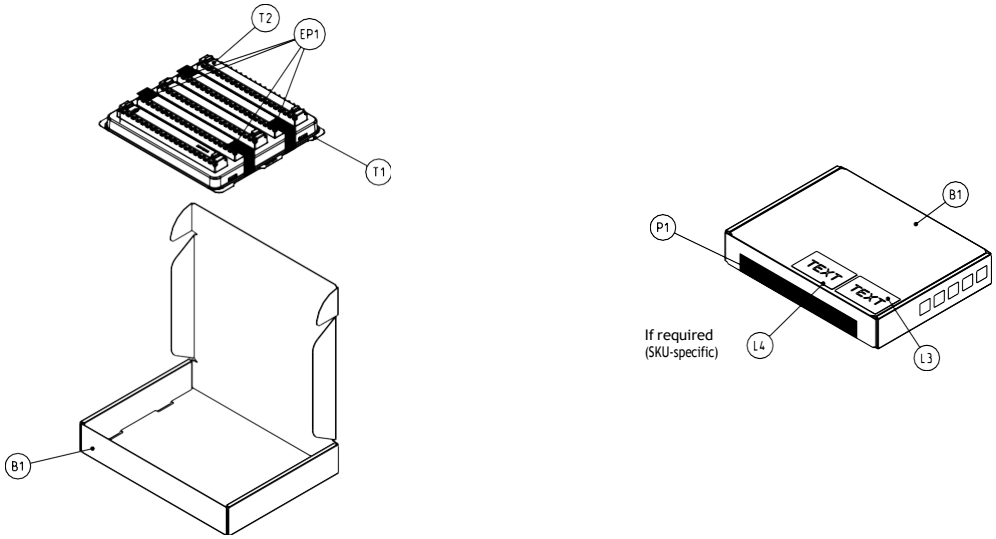

Figure 4-2: Shipping Package

E: References

This guide deals specifically with hardware integration issues that are unique to AirPrime embedded modules.

Lantronix, Inc. Documents

The Lantronix, Inc. documents listed below are available from https://www.lantronix.com/. For additional documents describing embedded module design, usage, and integration issues, contact your Lantronix, Inc. account representative.

Command Documents

[1] AT Command Set for User Equipment (UE) (Release 6) (Doc# 3GPP TS 27.007)

[2] AirPrime EM75xx and EM/MC74x1 AT Command Reference (Doc# 41111748)

Other Documents

[3] M.2 Dev Kit Welcome Letter (Doc# 2400323)

[4] AirCard/AirPrime USB Driver Developer's Guide (Doc# 2130634)

Industry/Other Documents

The following non-Lantronix, Inc. references are not included in your documentation package:

[5] FCC Regulations - Part 15 - Radio Frequency Devices

[6] IEC-61000-4-2 level 3 (Electrostatic Discharge Immunity Test)

[7] Mobile Station (MS) Conformance Specification; Part 4: Subscriber Interface Module (Doc# 3GPP TS 11.10-4)

[8] PCI Express NGFF (M.2) Electromechanical Specification Revision 1.0

[9] Universal Serial Bus Specification, Rev 2.0

[10] Universal Serial Bus Specification, Rev 3.0

[11] JESD22-A114-B

[12] JESD22-C101

[13]MIPI Alliance Specification for RF Front-End Control Interface

F: Acronyms

Table F-1: Acronyms and Definitions

Acronym or term	Definition
3GPP	3rd Generation Partnership Project
8PSK	Octagonal Phase Shift Keying
AGC	Automatic Gain Control
A-GPS	Assisted GPS
API	Application Programming Interface
BeiDou	BeiDou Navigation Satellite System A Chinese system that uses a series of satellites in geostationary and middle earth orbits to provide navigational data.
BER	Bit Error Rate—A measure of receive sensitivity
BLER	Block Error Rate
bluetooth	Wireless protocol for data exchange over short distances
CQI	Channel Quality Indication
COM	Communication port
CS	Circuit-switched
CSG	Closed Subscriber Group
CW	Continuous waveform
dB	Decibel = 10 x $\log_{10}$ (P1/P2) *P1 is calculated power; P2 is reference power* Decibel = 20 x $\log_{10}$ (V1/V2) *V1 is calculated voltage, V2 is reference voltage*
dBm	A logarithmic (base 10) measure of relative power (dB for decibels); relative to milliwatts (m). A dBm value will be 30 units (1000 times) larger (less negative) than a dBW value, because of the difference in scale (milliwatts vs. watts).
DC-HSPA+	Dual Carrier HSPA+
DCS	Digital Cellular System A cellular communication infrastructure that uses the 1.8 GHz radio spectrum.
DL	Downlink (network to mobile)
DRX	Discontinuous Reception
DSM	Distributed Shared Memory
DUT	Device Under Test
eICIC	Enhanced Inter-Cell Interference Coordination
EIRP	Effective (or Equivalent) Isotropic Radiated Power

Table F-1: Acronyms and Definitions (Continued)

Acronym or term	Definition
EMC	Electromagnetic Compatibility
EMI	Electromagnetic Interference
ERP	Effective Radiated Power
ESD	Electrostatic Discharge
FCC	Federal Communications Commission The U.S. federal agency that is responsible for interstate and foreign communications. The FCC regulates commercial and private radio spectrum management, sets rates for communications services, determines standards for equipment, and controls broadcast licensing. Consult www.fcc.gov.
FDD	Frequency Division Duplexing
FDMA	Frequency Division Multiple Access
feICIC	Further Enhanced Inter-Cell Interference Coordination
FER	Frame Error Rate—A measure of receive sensitivity.
firmware	Software stored in ROM or EEPROM; essential programs that remain even when the system is turned off. Firmware is easier to change than hardware but more permanent than software stored on disk.
FOTA	Firmware Over The Air—Technology used to download firmware upgrades directly from the service provider, over the air.
FOV	Field Of View
FSN	Factory Serial Number—A unique serial number assigned to the mini card during manufacturing.
Galileo	A European system that uses a series of satellites in middle earth orbit to provide navigational data.
GCF	Global Certification Forum
GLONASS	Global Navigation Satellite System—A Russian system that uses a series of 24 satellites in middle circular orbit to provide navigational data.
GMSK	Gaussian Minimum Shift Keying modulation
GNSS	Global Navigation Satellite Systems (GPS, GLONASS, BeiDou, and Galileo)
GPS	Global Positioning System An American system that uses a series of 24 satellites in middle circular orbit to provide navigational data.
Host	The device into which an embedded module is integrated
HSDPA	High Speed Downlink Packet Access
HSPA+	Enhanced HSPA, as defined in 3GPP Release 7 and beyond
HSUPA	High Speed Uplink Packet Access
Hz	Hertz = 1 cycle/second

Table F-1: Acronyms and Definitions (Continued)

Acronym or term	Definition
IC	Industry Canada
IF	Intermediate Frequency
IMEI	International Mobile Equipment Identity
IMS	IP Multimedia Subsystem—Architectural framework for delivering IP multimedia services.
inrush current	Peak current drawn when a device is connected or powered on
inter-RAT	Radio Access Technology
IOT	Interoperability Testing
IS	Interim Standard. After receiving industry consensus, the TIA forwards the standard to ANSI for approval.
ISIM	IMS Subscriber Identity Module (Also referred to as a SIM card)
LED	Light Emitting Diode. A semiconductor diode that emits visible or infrared light.
LHCP	Left-Hand Circular Polarized
LNA	Low Noise Amplifier
LPM	Low Power Mode
LPT	Line Print Terminal
LTE	Long Term Evolution—a high-performance air interface for cellular mobile communication systems.
MCS	Modulation and Coding Scheme
MHz	Megahertz = 10e6 Hz
MIMO	Multiple Input Multiple Output—wireless antenna technology that uses multiple antennas at both transmitter and receiver side. This improves performance.
NAS/AS	Network Access Server
NC	No Connect
NIC	Network Interface Card
NLIC	Non-Linear Interference Cancellation
NMEA	National Marine Electronics Association
OEM	Original Equipment Manufacturer—a company that manufactures a product and sells it to a reseller.
OFDMA	Orthogonal Frequency Division Multiple Access
OMA DM	Open Mobile Alliance Device Management—A device management protocol.
OTA	‘Over the air’ (or radiated through the antenna)

Table F-1: Acronyms and Definitions (Continued)

Acronym or term	Definition
PA	Power Amplifier
packet	A short, fixed-length block of data, including a header, that is transmitted as a unit in a communications network.
PCB	Printed Circuit Board
PCC	Primary Component Carrier
PCS	Personal Communication System A cellular communication infrastructure that uses the 1.9 GHz radio spectrum.
PDN	Packet Data Network
PMI	Pre-coding Matrix Index
PSS	Primary synchronisation signal
PST	Product Support Tools
PTCRB	PCS Type Certification Review Board
QAM	Quadrature Amplitude Modulation. This form of modulation uses amplitude, frequency, and phase to transfer data on the carrier wave.
QCI	QoS Class Identifier
QMI	Qualcomm MSM/Modem Interface
QOS	Quality of Service
QPSK	Quadrature Phase-Shift Keying
QPST	Qualcomm Product Support Tools
QZSS	Quasi-Zenith Satellite System—Japanese system for satellite-based augmentation of GPS.
RAT	Radio Access Technology
RF	Radio Frequency
RI	Ring Indicator
roaming	A cellular subscriber is in an area where service is obtained from a cellular service provider that is not the subscriber's provider.
RSE	Radiated Spurious Emissions
RSSI	Received Signal Strength Indication
SCC	Secondary Component Carrier
SDK	Software Development Kit
SED	Smart Error Detection
Sensitivity (Audio)	Measure of lowest power signal that the receiver can measure.

Table F-1: Acronyms and Definitions (Continued)

Acronym or term	Definition
Sensitivity (RF)	Measure of lowest power signal at the receiver input that can provide a prescribed BER/ BLER/SNR value at the receiver output.
SG	An LTE signaling interface for SMS (“SMS over SGs”)
SIB	System Information Block
SIM	Subscriber Identity Module. Also referred to as USIM or UICC.
SIMO	Single Input Multiple Output—smart antenna technology that uses a single antenna at the transmitter side and multiple antennas at the receiver side. This improves performance and security.
SISO	Single Input Single Output—antenna technology that uses a single antenna at both the transmitter side and the receiver side.
SKU	Stock Keeping Unit—identifies an inventory item: a unique code, consisting of numbers or letters and numbers, assigned to a product by a retailer for purposes of identification and inventory control.
SMS	Short Message Service. A feature that allows users of a wireless device on a wireless network to receive or transmit short electronic alphanumeric messages (up to 160 characters, depending on the service provider).
S/N	Signal-to-noise (ratio)
SNR	Signal-to-Noise Ratio
SOF	Start of Frame—A USB function.
SSS	Secondary synchronisation signal.
SUPL	Secure User Plane Location
TDD	Time Division Duplexing
TD-SCDMA	Time Division Synchronous Code Division Multiple Access
TIA/EIA	Telecommunications Industry Association / Electronics Industry Association. A standards setting trade organization, whose members provide communications and information technology products, systems, distribution services and professional services in the United States and around the world. Consult www.tiaonline.org.
TIS	Total Isotropic Sensitivity
TRP	Total Radiated Power
UDK	Universal Development Kit (for PCI Express Mini Cards)
UE	User Equipment
UICC	Universal Integrated Circuit Card (Also referred to as a SIM card.)
UL	Uplink (mobile to network)
UMTS	Universal Mobile Telecommunications System
USB	Universal Serial Bus

Table F-1: Acronyms and Definitions (Continued)

Acronym or term	Definition
USIM	Universal Subscriber Identity Module (UMTS)
VCC	Supply voltage
VSWR	Voltage Standing Wave Ratio
WAN	Wide Area Network
WCDMA	Wideband Code Division Multiple Access (also referred to as UMTS)
WLAN	Wireless Local Area Network
ZIF	Zero Intermediate Frequency
ZUC	ZUC stream cypher

Index

Numerics

3D gain, average
    gain
        3D average (GNSS), 62
3GPP compliance
    LTE, 57
    UMTS, 57

A

acceptance tests, 66
accessories, 15
accuracy (GNSS), 44
acquisition time (GNSS), 44
acronyms and definitions, 84– 89
A-GNSS, 14
antenna
    connection considerations, 36
    connectors, 17
    control, 17, 35
    custom, design, 37
    diversity antenna, disabling, 37
    GNSS, specifications, recommended, 60, 62
    limit, matching coaxial connections, 36
    location, considerations, 37
    matching, considerations, 37
    maximum cable loss, 36
    routing, 37
    specification, 60– 63
    specifications, recommended, 60
    testing, 62
antennas
    design checklist, 64
API, 53
application interface features, 13
approvals, regulatory and industry, 57
AT commands, 80
averaged call mode DC power consumption, 47
averaged standby DC power consumption, 46

B

bands supported, RF
    summary, 11
    LTE, 41, 42, 70, 72, 74, 76
bearers, dedicated, 14
BER (Bit Error Rate), 40
bit error rate (BER)
    measure of sensitivity, 40
block diagram
    expanded RF, 19, 20
    system, 18

C

cable loss
    antenna, maximum, 36
capacitors
    with SIM, 29
    with XIM_DATA / XIM_CLK, 29
carrier/operator testing, 79
cell selection, 14
certification tests, 67
checklist, design, 64
communications, host to modem
    design checklist, 65
conducted Tx power tolerances, 44
connection
    grounding, 38
connectors, required
    host-module, 15
control interface, 30
CQI, 14

D

DC power consumption
    averaged call mode, 47
    averaged standby, 46
desense. See RF
design checklist
    antennas, 64
    component placement, 64
    EMI/ESD, 64
    host/modem communications, 65
    power, 64
    thermal, 65
    USB3, 64
detach procedure, 14
dimensions, 54
diversity antenna
    disabling, 37
drop specifications, 54
dynamic power control, 17

E

EDGE
    connector, required, 15
electrical specifications, 17
electrostatic discharge specifications, 54
electrostatic discharge. See ESD
envelope correlation coefficient, 61
environmental specifications, 54– 56
ESD
    design checklist, 64
    protection requirements, 55
ESD specifications, 54
expanded RF block diagram, 19, 20

F

field of view, 62
filtering, RF desense, 39
form factor, 54
FOV, 62
free space average gain, 62
frequencies supported, 40
frequency band support
    LTE, 41, 42, 70, 72, 74, 76
Full_Card_Power_Off#, 32

G

gain
- GNSS, 62
- maximum, 57, 61
- mean effective, 61
- mean effective imbalance, 61

GNSS
- antenna specifications, recommended, 60, 62

GPS
- features supported, 14
- specifications, 44

GPS_DISABLE#, 17, 30, 31
ground specifications, 25
grounding
- connection considerations, 38

H

host interface
- pin assignments, 20

humidity specifications, 54

I

I/O rise time requirements, 29
impedance
- module–antenna, 37
- SIM, 29

industry approvals, 57
integration requirements, 15
interface
- control interface, 30
- feature summary, 13
- host, pin assignments, 20
- QMI, 53
- SIM, 26
- software, 53
- USB, 25

interference
- device generated, 39
- host-generated, 39
- power supply noise, 52
- wireless devices, 38

Interoperability testing, 79
intra-LTE mobility, 14
IOT testing, 79
iRAT, 14
isolation, 61, 62

L

LED
- example, 34

LED output, 17, 30, 33
LTE
- 3GPP compliance, 57
- bandwidth support, 41
- features, 14
- frequency band support, 41, 42, 70, 72, 74, 76

M

mean effective gain, 61
mean effective gain imbalance, 61
mechanical specifications, 54– 56
MIB, 14
modem features, 13
module
- power states, 48– 49

N

NAS/AS security, 14
noise
- leakage, minimizing, 38
- RF interference, power supply, 52

O

OEM
- assistance with testing, 79

operator/carrier testing, 79
ordering information, 15

P

packaging, 81
paging procedures, 14
PCB
- multi-layer, shielding for RF desense, 39

PDN connections, multiple, 14
pin assignments, host interface, 20
PMI, 14
polarization, 62
position location, 14
power
- design checklist, 64
- handling, 61
- power-up timing, 50
- ramp-up timing, 50
- state machines, 49
- states, module, 48– 49
- supply, RF interference, 52
- supply, ripple limit, 52

power consumption, DC
- averaged call mode, 47
- averaged standby, 46

power off signal, 17
power specifications, 25
power tolerances, conducted Tx, 44
Product Support Tool, QUALCOMM (QPST), 53
production tests, 68
PSS, 14

Q

QMI interface, 53
QPST (QUALCOMM Product Support Tool), 53
QUALCOMM Product Support Tool (QPST), 53
quality assurance tests, 78
QXDM support, 53

R

radiated efficiency, total, 60
radiated sensitivity measurement, 40
radiated spurious emissions, 39
radiation patterns, 61
references, 83
regulatory approvals, 57
regulatory information, 57– 59
    FCC, 57
reset
    timing, 50
RESET#, 17, 32
resistors, external pull-up, 29
RF
    antenna cable loss, maximum, 36
    antenna connection, considerations, 36
    connectors, required, 15
    desense
        device-generated, 39
        harmonic energy, filtering, 39
        mitigation suggestions, 39
        shielding suggestions, 39
    interference
        other devices, 39
        power supply, 52
        wireless devices, 38
RF bands supported
    summary, 11
    LTE, 41, 42, 70, 72, 74, 76
RF block diagram, expanded, 19, 20
RF specifications, 36– 45
RI, 14
RSE, 39
Rx sensitivity
    conducted, 43

S

sales
    ordering, 15
SAR backoff, 52
SDKs available, 53
SED
    see Smart Error Detection
See also GPS_DISABLE#, 31
See also W_DISABLE#, 31
sensitivity
    conducted, RF parameter, 43
    defined, 40
    radiated measurement, overview, 40
    testing, overview, 40
shielding
    module, compliance, 36
    reducing RF desense, 39
shock specifications, 54
SIB, 14
signals, 30
    Full_Card_Power_Off#, 32
    RESET#, 32
    WWAN_LED#, 33
SIM
    capacitor recommendations, 29
    card contacts, 26, 28
    clock rate, 29
    connector, required, 15
    electrical specifications, 29
    impedance, connectors, 29
    interface, 26
    interface diagram, 28
    operation, 29
SIM Detect, 17
Smart Error Detection
    detecting module reset, 52
SMS features, 14
Snow 3G/AES security, 14
software interface, 53
specifications
    electrical, 17
    environmental specifications, 54– 56
    GPS, 44
    mechanical, 54– 56
    RF, 36– 45
SSS, 14
standalone mode, GPS/GLONASS, 14
standby DC power consumption, averaged, 46
state machines, 49
support
    testing assistance by Lantronix, Inc., 79
    tools, 53
system acquisition, 14
system block diagram, 18

T

temperature specification
    ambient, 54
    high, 54
temperature, module. See thermal
testing
    overview, 66
    acceptance tests, 66
    assistance provided by Lantronix, Inc., 79
    certification tests, 67
    equipment, suggested, 79
    interoperability and operator/carrier testing, 79
    manual functional test, suggested, 68
    production tests, 68
    quality assurance tests, 78
    RF receive path, LTE, 76
    RF receive path, UMTS, 74
    RF transmission path, LTE, 72
    RF transmission path, UMTS, 70
    suggestions, 66– 80
thermal
    considerations, 55– 56
    design checklist, 65
    dissipation, factors affecting, 55
    dissipation, suggestions, 56
    testing, module, 56
thermal shock, specification, 54

timing
    power ramp-up, 50
    power-up, 50
    reset, 50
    USB enumeration, 50
tracking session
    automatic, 14
    standalone, 14
Tx power tolerances, conducted, 44

U

UMTS
    3GPP compliance, 57
USB
    drivers, user-developed, 26
    high / full speed throughput performance, 26
    interface, 25
USB enumeration timing, 50
USB3
    design checklist, 64

V

vibration specifications, 54
VSWR, 60, 62

W

W_DISABLE#, 17, 30, 31
WAKE_ON_WAN#, 17
Wireless Disable, 30
Wireless Disable (GNSS), 31
Wireless Disable (Main RF), 31
WWAN_LED#, 30, 33

Z

ZIF (Zero Intermediate Frequency), 38