sapling

Installation Manual V8.6

SBL/SBLG Series Wireless Clock

Current as of Feb. 2020

The Sapling Company, Inc.
670 Louis Drive
Warminster, PA 18974
USA

P. (+1) 215.322.6063
F. (+1) 215.322.8498
www.sapling-inc.com

The Sapling Company, Inc.
670 Louis Drive
Warminster, PA 18974
USA

P. (+1) 215.322.6063
F. (+1) 215.322.8498
www.sapling-inc.com

SBL and SBLG Series Wireless Clocks

Table of Contents

Table of Contents 2

Important Safety Instructions 3

Identify Your Clock 4

Wireless System Setup 5 - 6

Wall Mount Installation 7 - 12

Flag Mount Installation 13 - 20

Double Mount Installation 21 - 27

Adjustable Jumper Settings 28

Temperature Sensor Installation 29 □

Buzzer Installation 30 ■

Alternative Inputs 30

System Side - Wiring Diagram for 110/230VAC 33

- Wiring Diagram for 24VAC/VDC 34

Clock Side - Sync-Wire 35-38 ■

- RS485 39 ■

- User Inputs 39

Outputs 40

Manual Controls 41-47

sbdconfig

- Connecting to the Clock 48
- Setting up sbdconfig.exe 49 - 52
- Task Bar 53 - 54
- Display Settings 55
- Brightness Schedule 56
- Clock Settings 57
- Outputs 58
- Elapsed Timer 59
- Inputs 60 - 61
- Daylight Saving Time (DST) 62

Reading the Display 63

Frequently Asked Questions 64 - 65

Troubleshooting 66

Warranty 67

FCC Statements 68

□ Available with 3200 and 3300 models

■ Available with 3300 model only

Manuals may change without prior notice

The Sapling Company, Inc.
670 Louis Drive
Warminster, PA 18974
USA

P. (+1) 215.322.6063
F. (+1) 215.322.8498
www.sapling-inc.com

Important Safety Instructions

DANGER

SHOCK HAZARD

- Keep the electricity to this device turned OFF until the clock installation is complete.
- Do not expose the clock movement to water, or install the clock in a location where it may be exposed to water.

NOTICE

- Do not install the clock outdoors. Damage to the clock if placed outdoors voids the warranty.
- Do not hang objects from the clock or clock mounting parts. The clocks are not designed to support the weight of other objects.
- The clock face and housing may be cleaned with a damp cloth or disinfectant. Test other cleaning products on a small part of the clock housing before attempting to use on the rest of the clock. Avoid bleach and chemicals known to dissolve plastics.

WARNING

FIRE HAZARD

- Always follow your national and regional electrical codes or ordinances.
- The AC power circuit for the clock must be attached to a circuit breaker that can be reset by the user.

PHYSICAL INJURY HAZARD

- If you are standing on an object while installing your clock, make sure that the object can support your weight, and will not sway or move as you stand on it.
- Take precautions to avoid injury by potential safety hazards near the point of installation including (but not limited to) heavy machinery, sharp objects, hot surfaces, or exposed cables carrying an electric current.
- Follow all mounting instructions exactly as stated in this manual. Failure to do so may result in the device falling off the point of installation.
- Packaging materials and mounting items include plastic bags and small pieces, which pose a suffocation hazard to young children.

The Sapling Company, Inc.
670 Louis Drive
Warminster, PA 18974
USA

P. (+1) 215.322.6063
F. (+1) 215.322.8498
www.sapling-inc.com

Identify Your Clock

A label containing the part number of your clock is attached to the clock packaging

If your part number begins with SBL-31, you own a 3100 Series clock

If your part number begins with SBL-32, you own a 3200 clock

If your part number begins with SBL-33 you own a 3300 clock

If the second group in your part number ends in S (31S, 32S, 33S), you own a Surface Mount Clock, which can be attached to a pole as a Flag Mount or a Double Mount.

If you wish to change the mounting type, contact your dealer.

The Sapling Company, Inc.
670 Louis Drive
Warminster, PA 18974
USA

P. (+1) 215.322.6063
F. (+1) 215.322.8498
www.sapling-inc.com

Wireless System Setup

VERY IMPORTANT:

INSTALL, POWER, AND SET YOUR MASTER CLOCK OR REPEATER BEFORE POWERING THE SECONDARY WIRELESS CLOCKS

A Sapling Master Clock and any Repeaters must be installed, powered, and set up BEFORE you attempt to set up a wireless clock system. If the Master Clock and Repeaters are not properly installed and powered, the secondary clocks will not synchronize.

Positioning Transceivers:

The main transceiver should be installed in a central location where there is a minimum number of walls between the transmitter and clocks. After the main transceiver has been installed, begin installing the secondary clocks nearest to the main transceiver, followed by whichever clocks are nearest to the secondary clocks, and so on. Each secondary clock within range of the transceiver should receive data and begin correcting itself within five minutes of being powered on. Be aware of walls or other obstructions made of thick concrete or sheet metal, as these may block the signal entirely.

System Setup Options

There are three ways to operate a system of Sapling's SBL/SBLG Series Wireless clocks. The user may choose one or a combination of the options listed below:

1. No clocks are used for transmission. This option should only be taken if the user already has a main high-powered transceiver and as many repeaters as needed to cover the premises.
2. Battery powered analog clocks are used as transceivers/repeaters. This option assumes that there is at least one high powered transceiver in range of enough of the clocks that the clocks can repeat the signal to all other clocks in the system.
3. Locally powered clocks are used as transceivers/repeaters. This option assumes that there is at least one high powered transceiver in range of enough of the clocks that the clocks can repeat the signal to all other clocks in the system.

Before performing any of these options, the user must install and power the master clock and main transceiver first.

The Sapling Company, Inc.
670 Louis Drive
Warminster, PA 18974
USA

P. (+1) 215.322.6063
F. (+1) 215.322.8498
www.sapling-inc.com

Wireless System Setup (ctd.)

System Option 1

No clocks are being used for transmission. This option should only be taken if the user already has a main high-powered transceiver and as many repeaters as needed to cover the premises.

1. Place the main transceiver in a central location, like a hallway, where the signal will not be blocked.
2. Pick the location for a secondary transceiver or repeater.
3. Place the secondary transceiver or repeater in a location where it can receive the signal from the main transceiver.
4. Power up the main and secondary transceivers. Within five minutes, the secondary transceiver should be showing the time of the main transceiver. If the secondary transceiver is failing to synchronize, install it closer to the main transceiver.
5. Repeat steps 1-4 with all additional transceivers or repeaters. Note that other transceivers or repeaters can receive signals from a properly synchronized secondary transceiver/repeater, not just the main transceiver/repeater.

System Option 2

Battery powered analog clocks are used as transceivers/repeaters. This option assumes that there is at least one high powered transceiver in range of enough of the clocks and that the clocks can repeat the signal to all other clocks in the system. **REFER TO THE ANALOG CLOCK MANUAL FOR DETAILED INSTRUCTIONS.**

1. Install the batteries in the analog clocks while close to the main transceiver.
2. After each clock has received a signal from the transceiver and adjusted to the main transceiver time, place the battery cover back on.
3. Take each clock, while the clock is running, to the planned point of installation and mount the clock on the wall.
4. Power the digital clocks and wait for the synchronization signal to go through the batter-powered analog clock.

(**NOTE:** This method does not confirm that the clocks are in range of each other)

System Option 3

Locally powered clocks are used as transceivers/repeaters. This option assumes that there is at least one high powered transceiver in range of enough of the clocks that the clocks can repeat the signal to all other clocks in the system.

In this state, locally powered wireless clocks will enable their receivers at all times, and will transmit time data once each minute.

The Sapling Company, Inc.
670 Louis Drive
Warminster, PA 18974
USA

P. (+1) 215.322.6063
F. (+1) 215.322.8498
www.sapling-inc.com

Wall Mount Installation

VERY IMPORTANT:

INSTALL, POWER, AND SET YOUR MASTER CLOCK OR REPEATER BEFORE POWERING THE SECONDARY WIRELESS CLOCKS

A Sapling Master Clock and any Repeaters must be installed, powered, and set up BEFORE you attempt to set up a wireless clock system. If the Master Clock and Repeaters are not properly installed and powered, the secondary clocks will not synchronize.

Included in Package

Description	Quantity	Picture
SBL Digital Clock	1	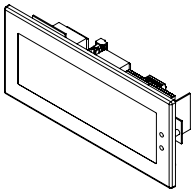
Digital Clock Wall Housing	1	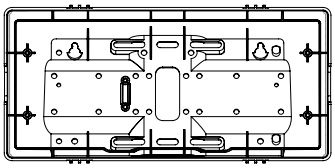
6-19x1/2 screw	4	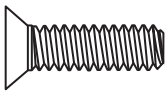
6-32x1 screw	4	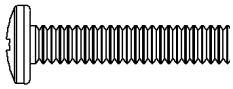

Included in Wiring Kit (D-PK-3-110-S or D-PK-3-24-S)

Power/grounding wires and connector	1	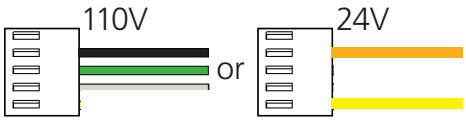

PLEASE NOTE: A user will also have to provide a Phillips-head screwdriver, a small flat-blade screwdriver, a single gang box, any equipment needed to install the gang box, and any additional wiring needed to extend the signal, power, or ground cables. You may also need a 1/4 inch drill, 4 #8x1.5 self-tapping screws, and 4 wall anchors for those screws if you decide not to attach the clock directly to the gang box.

If any of the items listed in the wiring kit are missing, you may contact your dealer and order a replacement kit.

The Sapling Company, Inc.
670 Louis Drive
Warminster, PA 18974
USA

P. (+1) 215.322.6063
F. (+1) 215.322.8498
www.sapling-inc.com

Wall Mount Installation

1) If you are installing a new gang box in the wall, leave at least 4 inches between the top of the gang box and ceiling. Confirm that the bottom of the gang box is level with the floor.

If you are using an existing gang box, the top of the gang box must be a minimum of three inches away from the ceiling.

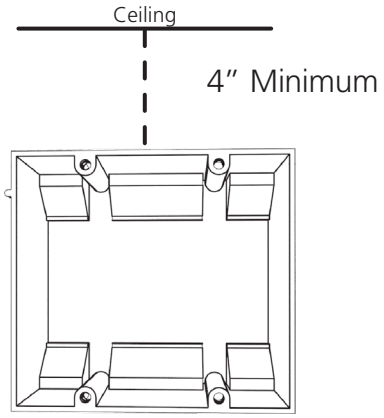

2) Run power and communication wiring to the gang box. See the sections of this manual labeled "Inputs - System Side" for additional details, depending on your system.

CHECK YOUR WIRING

The voltage between the white and black wires should measure 105-126 volts AC in the 110 volt model, 207-253 volts AC in the 230 volt model, or Yellow & orange wires for 21.5-26.5 volts AC in the 24 volt model.

If you are using the 24 volt model, make sure that the wiring leading to the clock is from an ISOLATED transformer.

3) Attach the power wires from your kit to the communication and power wires in the gang box. See the sections of this manual labeled "Communication Wiring Information"for additional details, depending on your system.

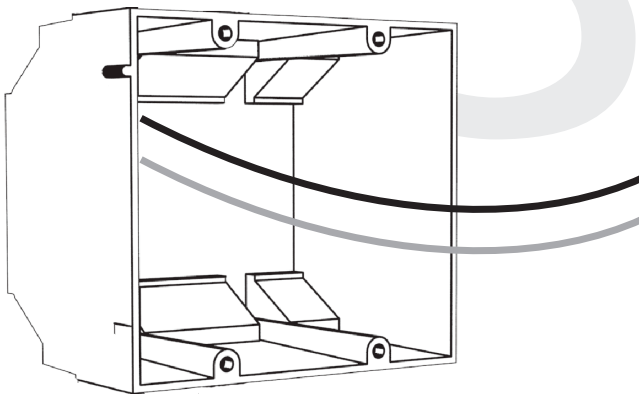

4) If you do not wish to attach the housing to the gang box, proceed to step 5A. Otherwise, go to step 6.

The Sapling Company, Inc.
670 Louis Drive
Warminster, PA 18974
USA

P. (+1) 215.322.6063
F. (+1) 215.322.8498
www.sapling-inc.com

Wall Mount Installation

5A) If you do not wish to attach the housing to a gang box, place the mounting piece on the wall. Leave at least 4 inches between the top rear edge of the housing and ceiling. Confirm that the bottom of the mounting piece is level with the floor.

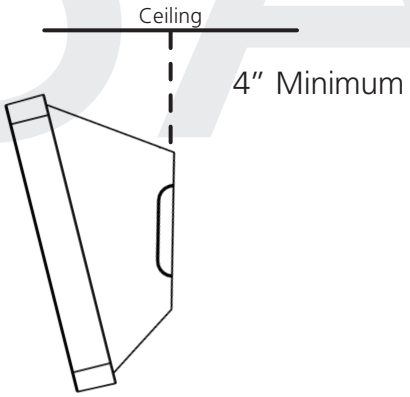

5B) Identify the keyholes towards the top of the back of the clock housing. Use a pencil to trace the top of each keyhole onto the wall, then use the 1/4 inch drill bit to drill holes at the locations of the two marks.

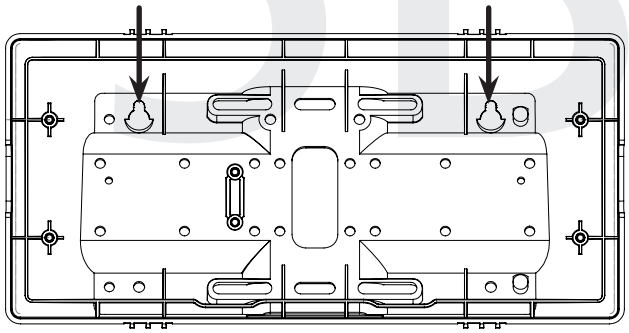

5C) Insert the wall anchors into the two holes, then place a #8 self-tapping screw into each wall anchor, leaving at least a 1/8" gap between the top of the screw and the wall.

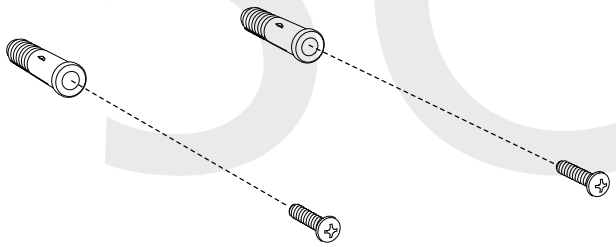

5D) Use the keyholes in the back of the housing to hang the clock onto the screws.

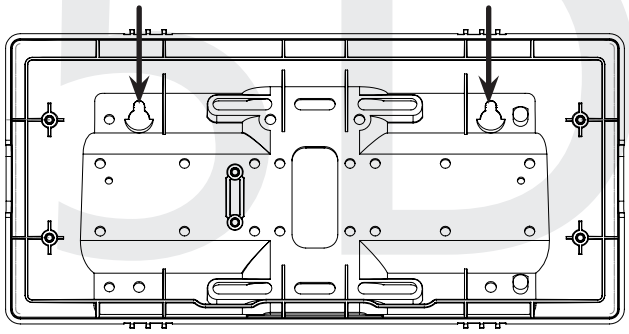

The Sapling Company, Inc.
670 Louis Drive
Warminster, PA 18974
USA

P. (+1) 215.322.6063
F. (+1) 215.322.8498
www.sapling-inc.com

Wall Mount Installation

5E) Use a pencil to trace the holes beneath each keyhole onto the wall. Take the clock housing off the wall, drill holes at the marked locations, and add another two wall anchors.

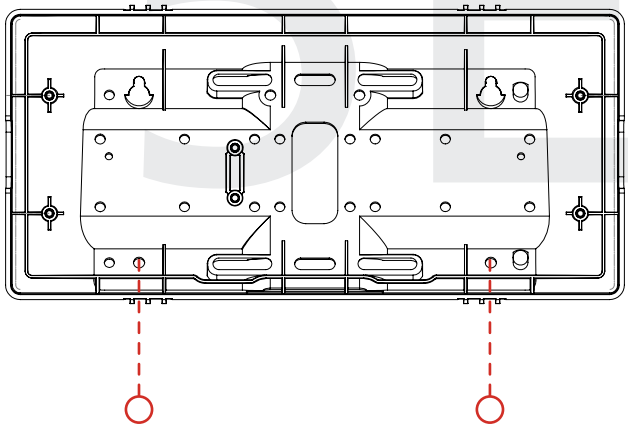

5F) Repeat step 5D, then pass another pair of #8 screws through the bottom holes and secure them in the remaining two wall anchors.

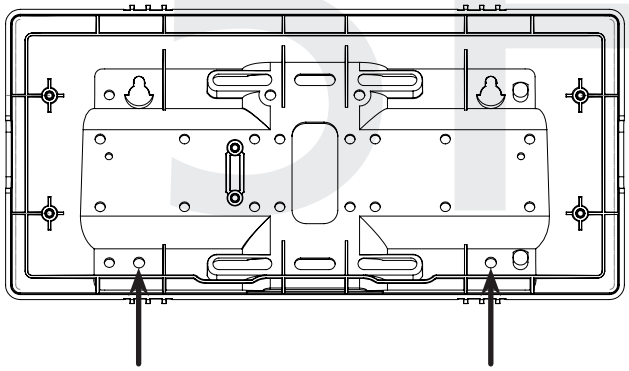

5G) Run power wires through the large hole in the back of the housing. Secure the wires by passing them through the wire clamp.

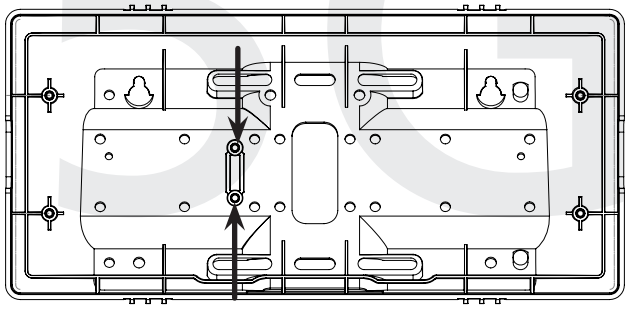

6) Perform step 5F, then attach the housing to the gang box using the #6-32x1 screws.

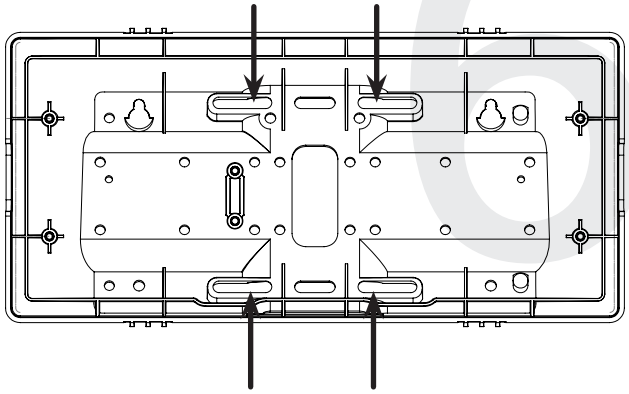

The Sapling Company, Inc.
670 Louis Drive
Warminster, PA 18974
USA

P. (+1) 215.322.6063
F. (+1) 215.322.8498
www.sapling-inc.com

Wall Mount Installation

7) Detach the filter from the clock display board by pressing inward on the red tabs.

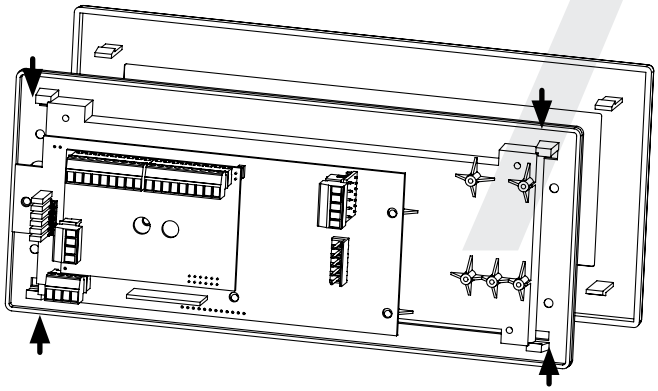

8) Attach the power wires to the ports as shown below.

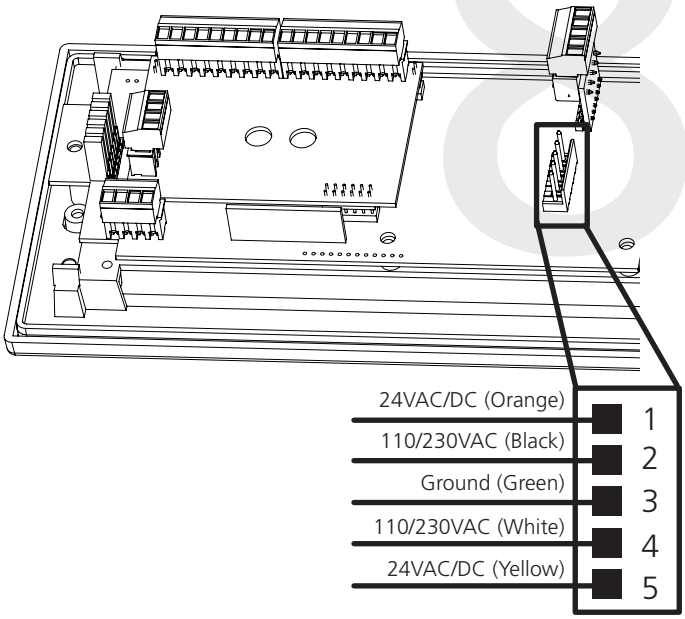

9) Detach the frame from the front of the clock housing by pulling the bottom and top edges away from the housing.

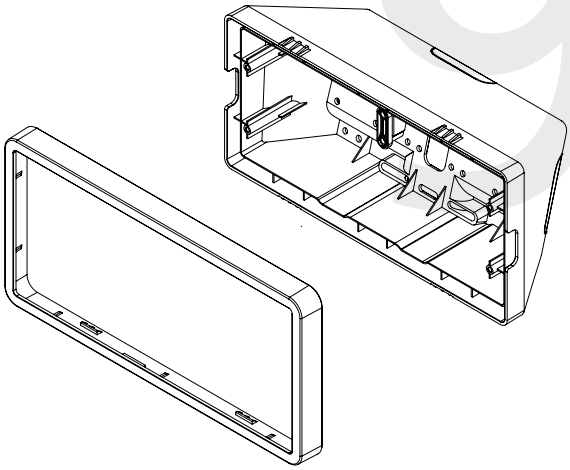

10) Use the 6-19x1/2 screws to attach the display board to the housing.

NOTE: For 2.5" Digit clocks, the holes for the screws will be on the left and right inner surfaces of the housing. For 4.0" Digit Clocks, the holes will be on the top and bottom surfaces.

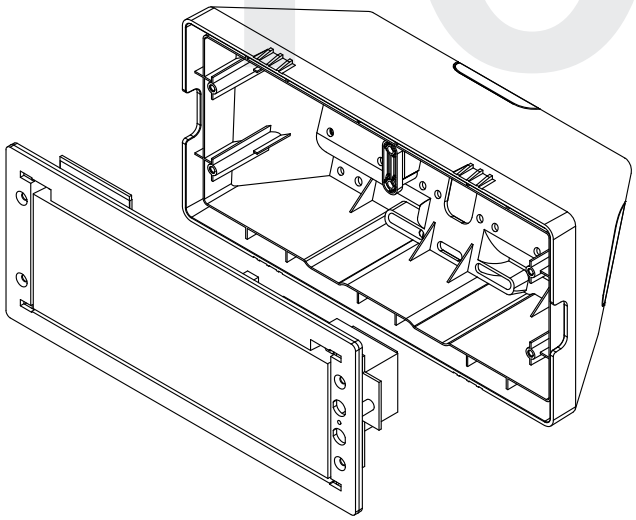

The Sapling Company, Inc.
670 Louis Drive
Warminster, PA 18974
USA

P. (+1) 215.322.6063
F. (+1) 215.322.8498
www.sapling-inc.com

Wall Mount Installation

11) Remove the plastic cover from the display board.

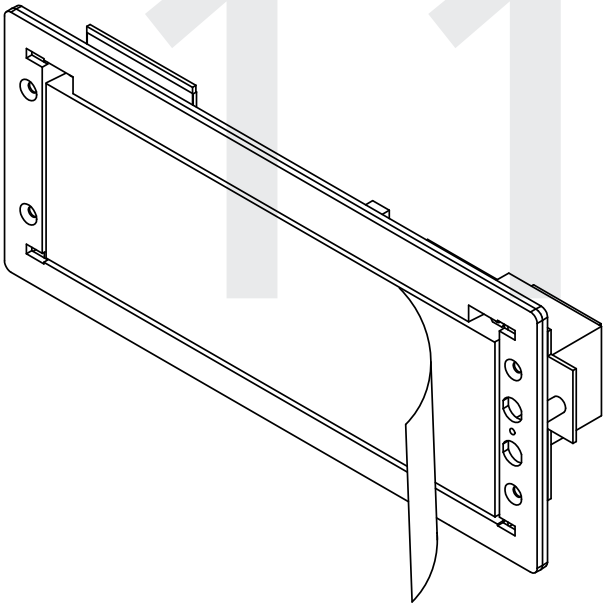

12) Place the filter over the display board. You should hear a snapping noise as the latches drop into place.

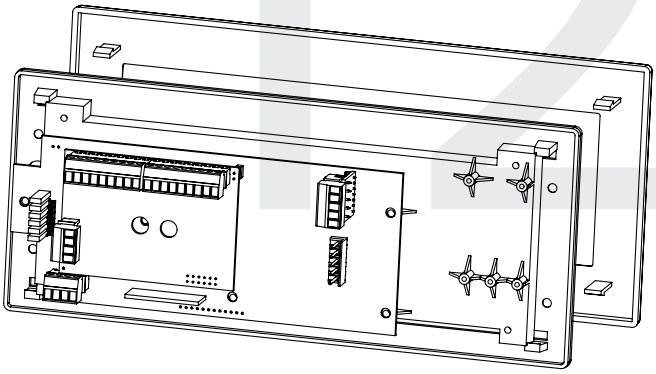

13) Place the housing frame onto the housing. You should hear a snapping noise as the latches drop into place.

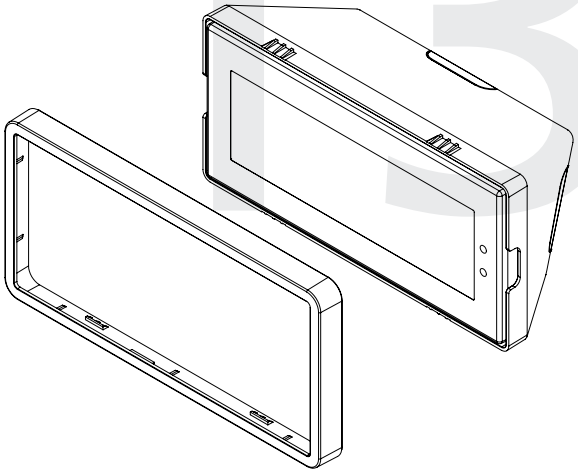

14) Power the clock. After testing the LED segments and presenting some diagnostic information, the clock will display the time based off if its internal quartz oscillator. It will correct itself to show synchronized time as soon as it receives data from a master clock.

The Sapling Company, Inc.
670 Louis Drive
Warminster, PA 18974
USA

P. (+1) 215.322.6063
F. (+1) 215.322.8498
www.sapling-inc.com

Flag Mount Installation

VERY IMPORTANT:

INSTALL, POWER, AND SET YOUR MASTER CLOCK OR REPEATER BEFORE POWERING THE SECONDARY WIRELESS CLOCKS

A Sapling Master Clock and any Repeaters must be installed, powered, and set up BEFORE you attempt to set up a wireless clock system. If the Master Clock and Repeaters are not properly installed and powered, the secondary clocks will not synchronize.

Included in Package

Description	Quantity	Picture
SBL Digital Clock	1	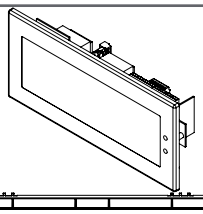
Digital Clock Wall Housing	1	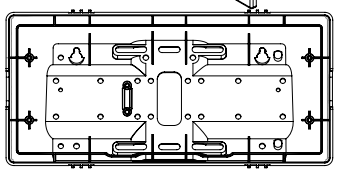
6-19x1/2 screw	4	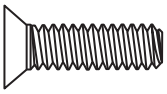
6-32x1 screw	4	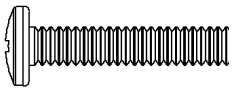
Included in Pole Kit (SAB-4GD-00S-0 or SAB-1GD-00S-0)		
Dual-mount pole, including mounting plate	1	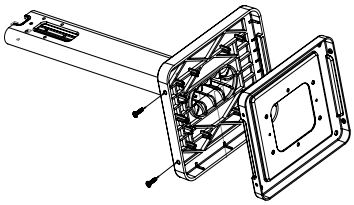
#10-32x3/8 green screw	1	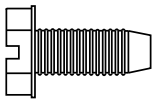
#8-32x7/16 screw	8	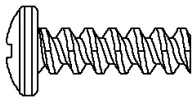

Continued on next page

If any of the items listed in the kits are missing, you may contact your dealer and order a replacement kit.

The Sapling Company, Inc.
670 Louis Drive
Warminster, PA 18974
USA

P. (+1) 215.322.6063
F. (+1) 215.322.8498
www.sapling-inc.com

Flag Mount Installation

M3.5-1.0x10 screw (black)	4	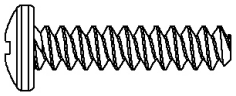
Internal-tooth washer	8	
#6-32x1 screw	4	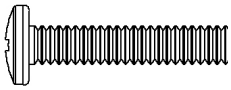
Adapter tab screws	4	

Included in Wiring Kit (D-PK-3-110-S or D-PK-3-24-S) - 2 kits included

Power/grounding wires and connector	1	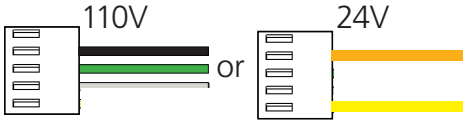

PLEASE NOTE: A user will also have to provide a Phillips-head screwdriver, a small flat-blade screwdriver, a single gang box, any equipment needed to install the gang box, and any additional wiring needed to extend the signal, power, or ground cables. You may also need a 1/4 inch drill, 4 #8x1.5 self-tapping screws, and 4 wall anchors for those screws if you decide not to attach the clock directly to the gang box.

If any of the items listed in the wiring kit are missing, you may contact your dealer and order a replacement kit.

The Sapling Company, Inc.
670 Louis Drive
Warminster, PA 18974
USA

P. (+1) 215.322.6063
F. (+1) 215.322.8498
www.sapling-inc.com

Flag Mount Installation

1) Install the double gang box in the wall or ceiling. If you are installing the gang box in the wall, leave at least eleven inches between the top of the gang box and the ceiling. If you are installing the gang box in the ceiling, leave at least eleven inches between the gang box and the wall. The box should be installed level and plumb with the wall and ceiling.

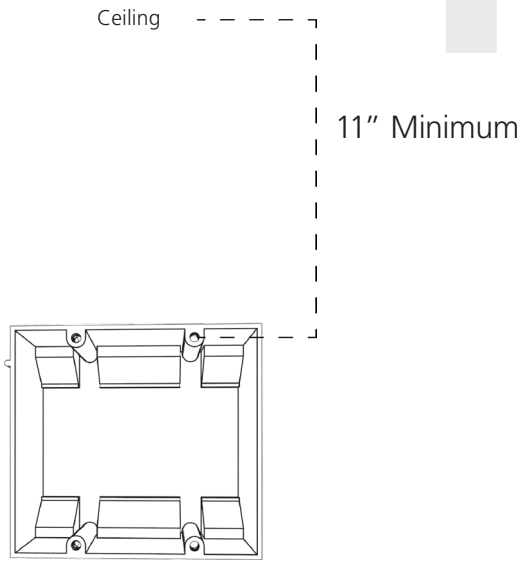

2) Run power and communication wiring to the gang box. See the sections of this manual labeled "Inputs - System Side" for additional details, depending on your system.

CHECK YOUR WIRING

The voltage between the white and black wires should measure 105-126 volts AC in the 110 volt model, 207-253 volts AC in the 230 volt model, or Yellow & orange wires for 21.5-26.5 volts AC in the 24 volt model.

If you are using the 24 volt model, make sure that the wiring leading to the clock is from an ISOLATED transformer.

3) Detach the mounting plate from the mounting pole by unscrewing the two screws. Set the screws and pole aside for later.

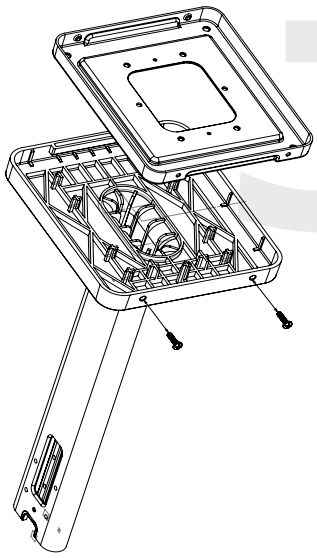

4) Attach the mounting plate to the gang box using only two of the four long, silver #6-32x1 screws. With the mounting plate as a guide, use the pencil to trace the locations of the four larger holes at the outer corners.

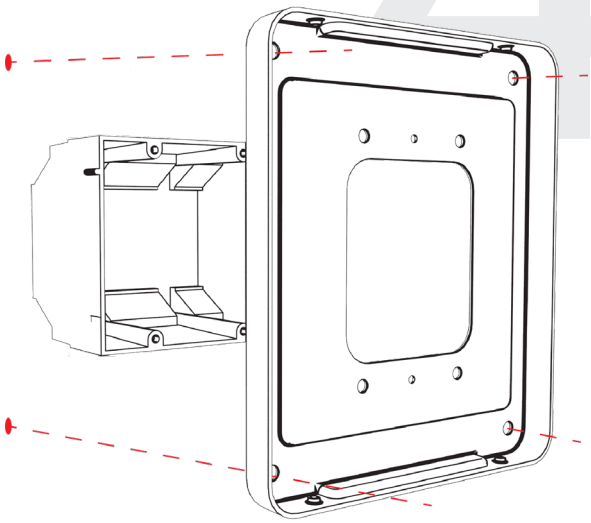

The Sapling Company, Inc.
670 Louis Drive
Warminster, PA 18974
USA

P. (+1) 215.322.6063
F. (+1) 215.322.8498
www.sapling-inc.com

Flag Mount Installation

Steps 5 and 6 only apply to metal mounting poles. If you have an ABS mounting pole, skip to step 7

5) Remove the mounting pole end cap and the plastic ring from one of the holes.

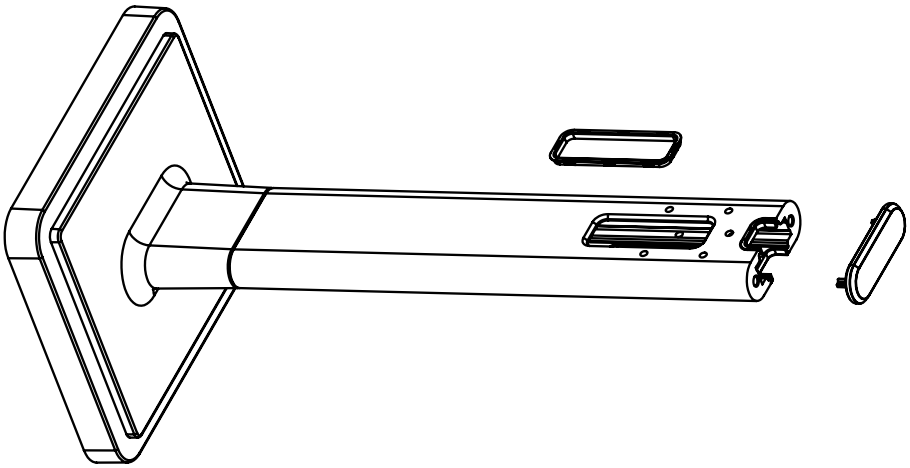

6) Attach the flag-mount end cap to the pole. Confirm that the covering flap is attached to the side where the plastic ring was removed.

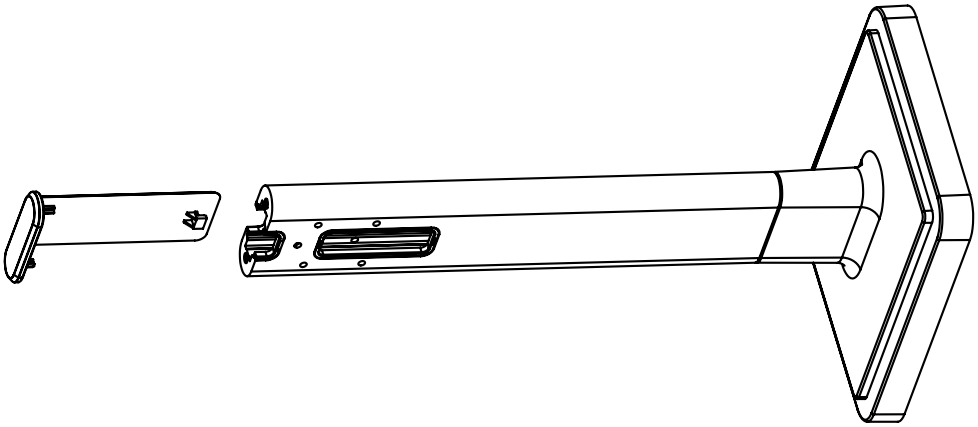

The Sapling Company, Inc.
670 Louis Drive
Warminster, PA 18974
USA

P. (+1) 215.322.6063
F. (+1) 215.322.8498
www.sapling-inc.com

Flag Mount Installation

7) Remove the mounting plate and drill the four holes that were just traced. Insert the four wall anchors into the holes.

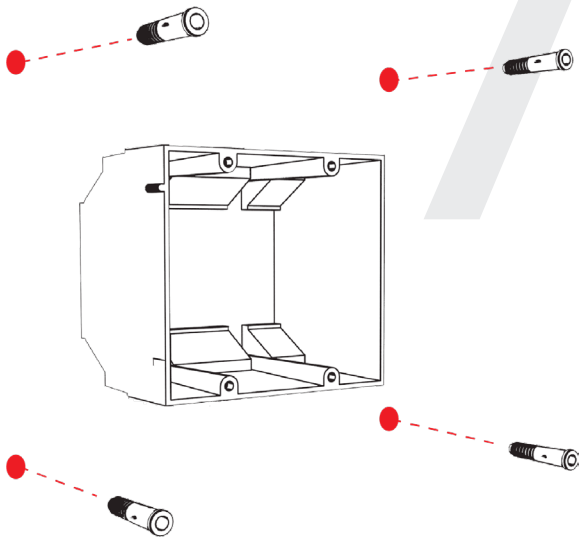

8) Reattach the mounting plate, this time using all four long, silver #6-32x1 screws, then insert the four #8 screws through the mounting plate and into the anchors.

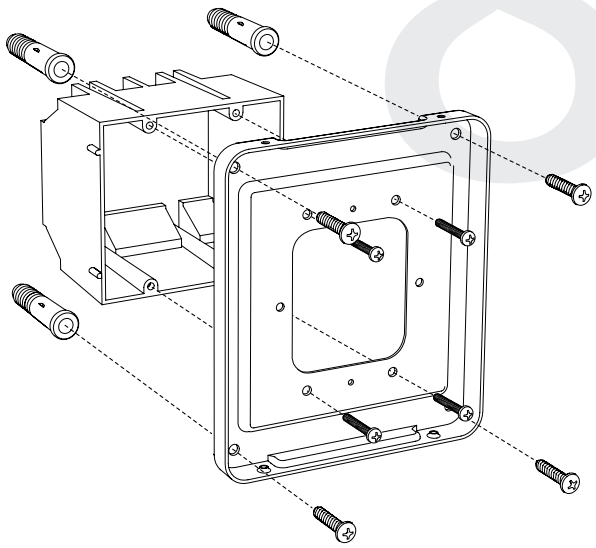

9) Thread any wiring through the mounting plate, and attach a grounding wire to the mounting plate using one of the larger centered holes and the #10-32x3/8 screw.

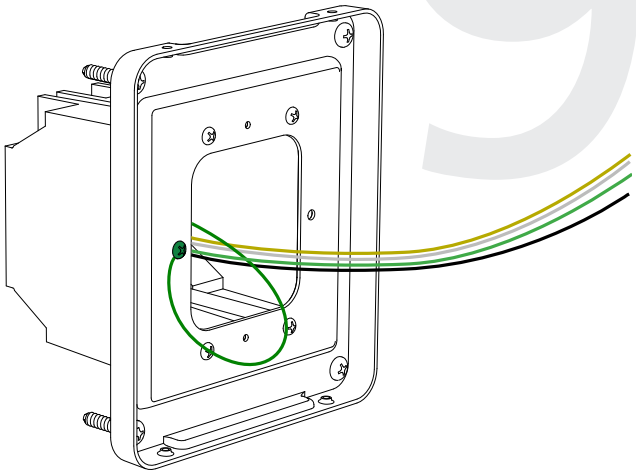

10) Use a screwdriver to remove one of the end caps. The selected end cap should match the position of the orientation of the clock on the mounting pole; for example, if you wish to attach the clock to the pole in a ceiling-mount configuration, then the top end cap should be removed. The end cap and screw that was used to secure it will not be needed again during this installation.

The Sapling Company, Inc.
670 Louis Drive
Warminster, PA 18974
USA

P. (+1) 215.322.6063
F. (+1) 215.322.8498
www.sapling-inc.com

Flag Mount Installation

11) Detach the frame from the front of the clock housing by pulling the bottom and top edges away from the housing.

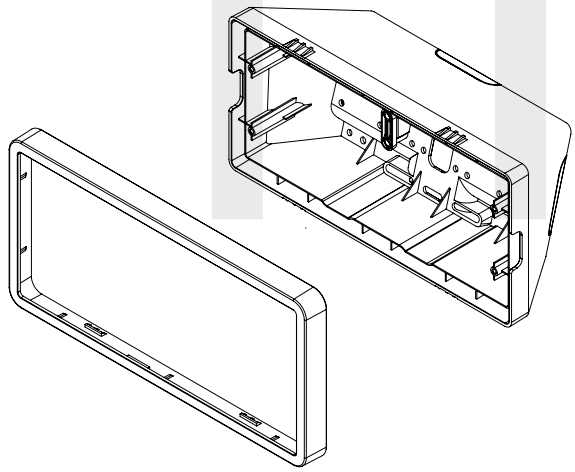

12) Insert the four #8-32x7/16 screws through the internal-tooth washers, then through the adapter, and finally into the pole. Use a screwdriver to tighten the screws so that the adapter does not move.

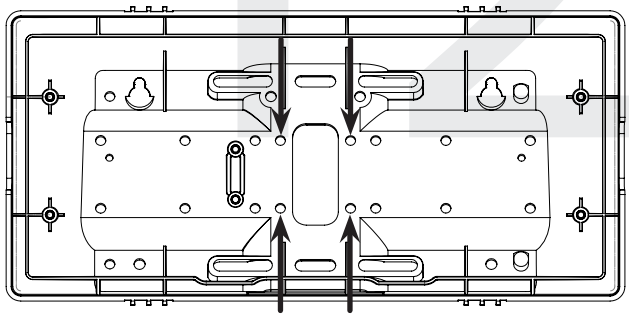

13) Thread at least fifteen inches (38.1cm) of wiring from the gang box through the bottom of the pole until each wire exits through the hole in the adapter. Secure the wires by passing them through the wire clamp.

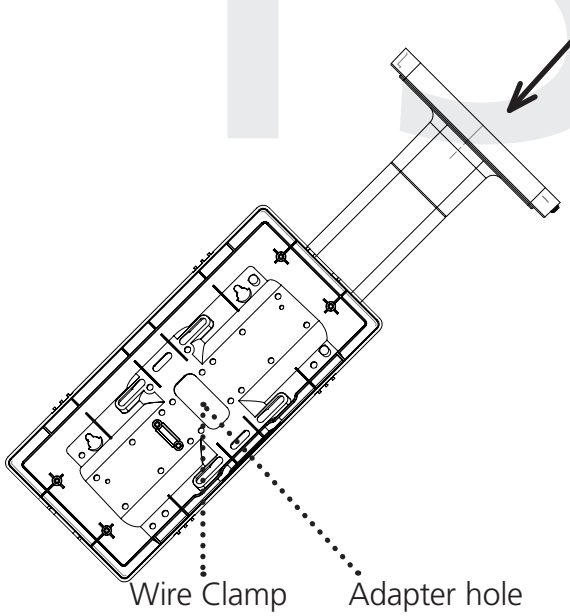

14) Detach the filter from the clock display board by pressing inward on the red tabs.

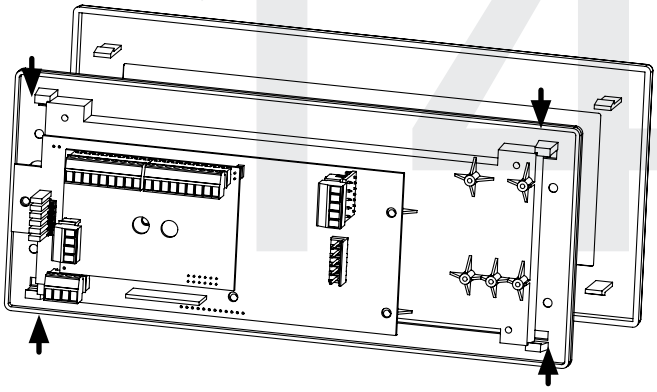

The Sapling Company, Inc.
670 Louis Drive
Warminster, PA 18974
USA

P. (+1) 215.322.6063
F. (+1) 215.322.8498
www.sapling-inc.com

Flag Mount Installation

15) Attach the power wires to the ports as shown below.

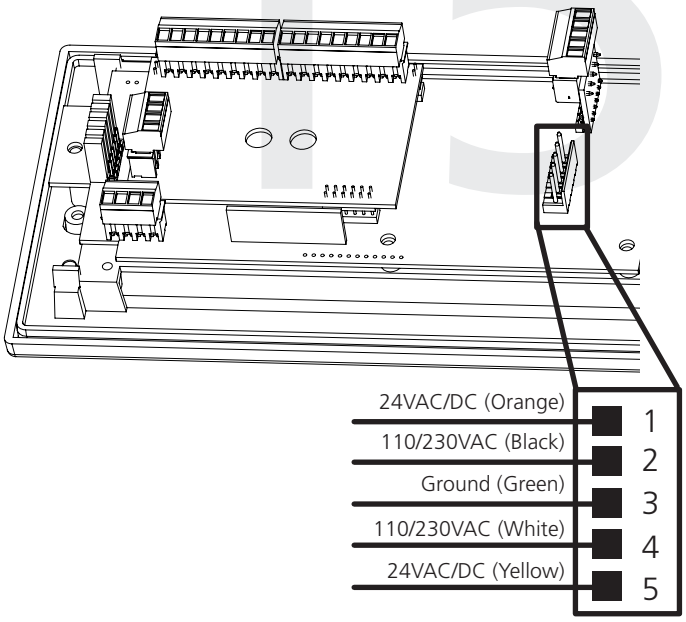

16) Use the M3/5-15x12 screws to attach the display board to the housing.

NOTE: For 2.5" Digit clocks, the holes for the screws will be on the left and right inner surfaces of the housing. For 4.0" Digit Clocks, the holes will be on the top and bottom surfaces.

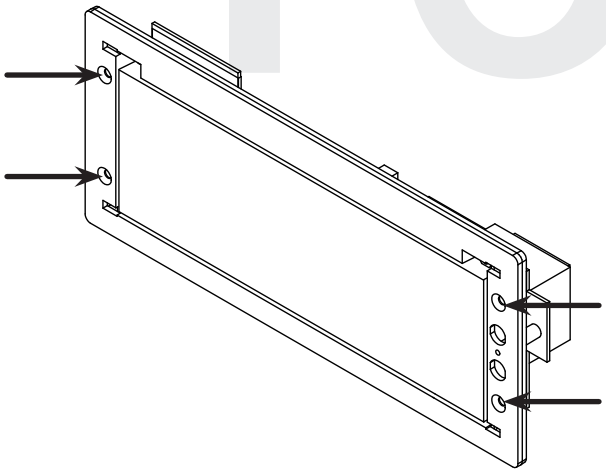

17) Use the 6-32x12 screws to attach the display board to the housing.

NOTE: For 2.5" Digit clocks, the holes for the screws will be on the left and right inner surfaces of the housing. For 4.0" Digit Clocks, the holes will be on the top and bottom surfaces.

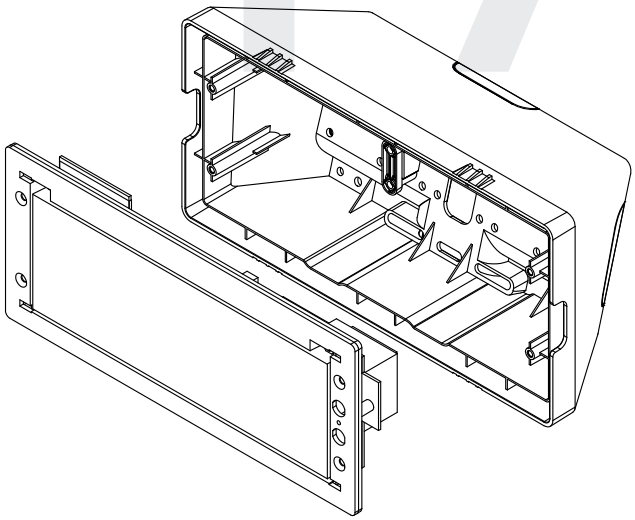

18) Remove the plastic cover from the display board.

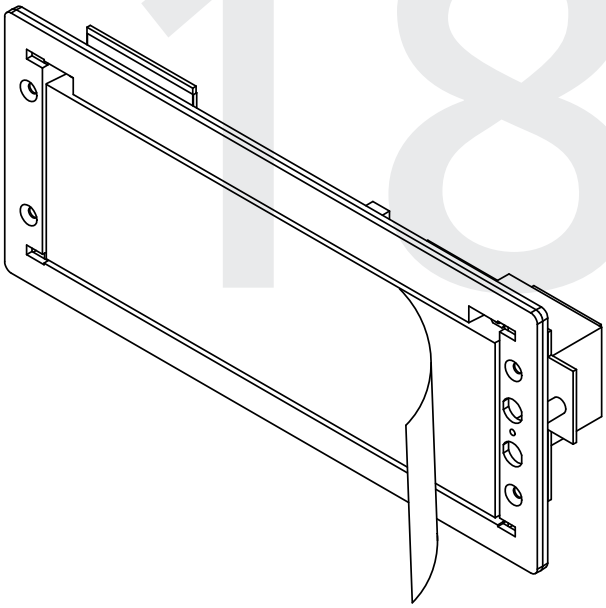

The Sapling Company, Inc.
670 Louis Drive
Warminster, PA 18974
USA

P. (+1) 215.322.6063
F. (+1) 215.322.8498
www.sapling-inc.com

Flag Mount Installation

19) Place the filter over the display board. You should hear a snapping noise as the latches drop into place.

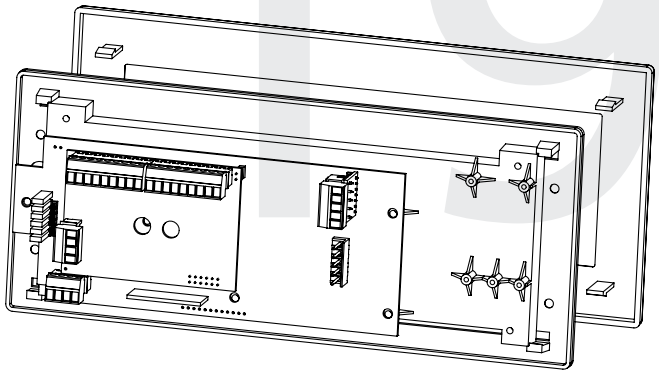

20) Place the housing frame onto the housing. You should hear a snapping noise as the latches drop into place.

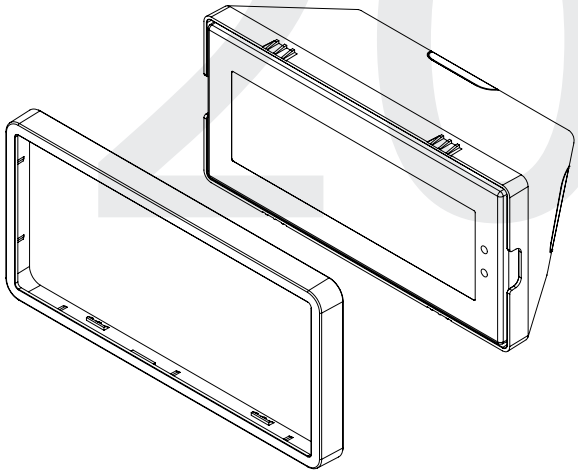

21) Hang the base of the pole on the mounting plate so that the lip is on top of the base, and the holes for the screws are on the bottom of the base. Attach the wires from the pole to the wires in the gang box, then use the two black base screws to attach the other side of the base to the mounting plate.

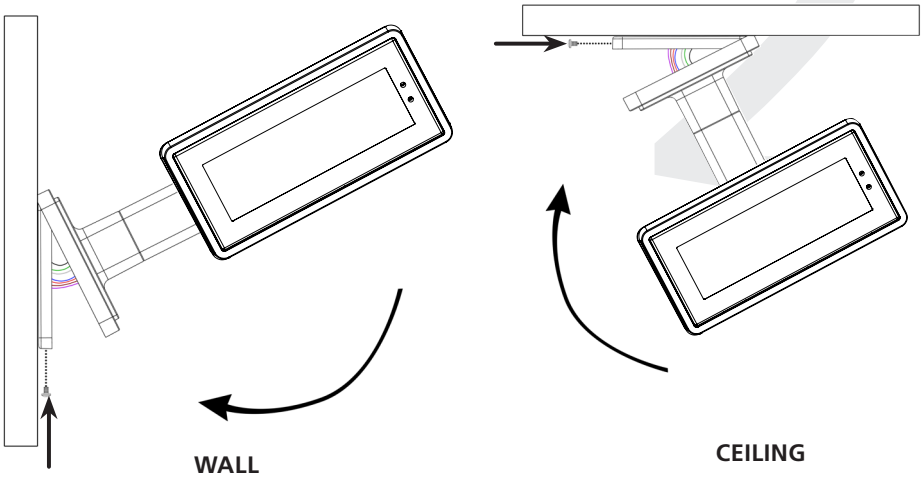

22) Power the clock. After testing the LED segments and presenting some diagnostic information, the clock will display the time based off if its internal quartz oscillator. It will correct itself to show synchronized time as soon as it receives data from a master clock.

The Sapling Company, Inc.
670 Louis Drive
Warminster, PA 18974
USA

P. (+1) 215.322.6063
F. (+1) 215.322.8498
www.sapling-inc.com

Double Mount Installation

VERY IMPORTANT:

INSTALL, POWER, AND SET YOUR MASTER CLOCK OR REPEATER BEFORE POWERING THE SECONDARY WIRELESS CLOCKS

A Sapling Master Clock and any Repeaters must be installed, powered, and set up BEFORE you attempt to set up a wireless clock system. If the Master Clock and Repeaters are not properly installed and powered, the secondary clocks will not synchronize.

Included in Package

Description	Quantity	Picture
SBL Digital Clock	1	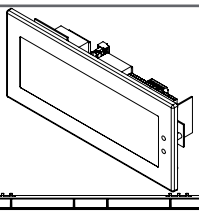
Digital Clock Wall Housing	1	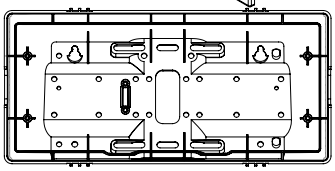
6-19x1/2 screw	8	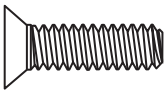
6-32x1 screw	8	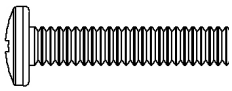
Included in Pole Kit (SAB-4GD-00S-0 or SAB-1GD-00S-0)		
Dual-mount pole, including mounting plate	1	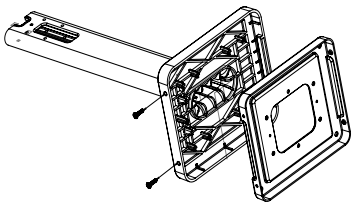
#10-32x3/8 green screw	1	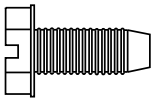
#8-32x7/16 screw	8	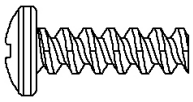

Continued on next page

If any of the items listed in the kits are missing, you may contact your dealer and order a replacement kit.

The Sapling Company, Inc.
670 Louis Drive
Warminster, PA 18974
USA

P. (+1) 215.322.6063
F. (+1) 215.322.8498
www.sapling-inc.com

Double Mount Installation

M3.5-1.0x10 screw (black)	4	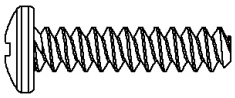
Internal-tooth washer	8	
#6-32x1 screw	4	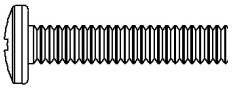
Adapter tab screws	4	

Included in Wiring Kit (D-PK-3-110-S or D-PK-3-24-S) - 2 kits included

Power/grounding wires and connector	1	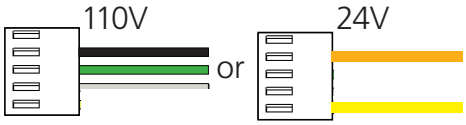

PLEASE NOTE: A user will also have to provide a Phillips-head screwdriver, a small flat-blade screwdriver, a single gang box, any equipment needed to install the gang box, and any additional wiring needed to extend the signal, power, or ground cables. You may also need a 1/4 inch drill, 4 #8x1.5 self-tapping screws, and 4 wall anchors for those screws if you decide not to attach the clock directly to the gang box.

If any of the items listed in the wiring kit are missing, you may contact your dealer and order a replacement kit.

The Sapling Company, Inc.
670 Louis Drive
Warminster, PA 18974
USA

P. (+1) 215.322.6063
F. (+1) 215.322.8498
www.sapling-inc.com

Double Mount Installation

1) Install the double gang box in the wall or ceiling. If you are installing the gang box in the wall, leave at least eleven inches between the top of the gang box and the ceiling. If you are installing the gang box in the ceiling, leave at least eleven inches between the gang box and the wall. The box should be installed level and plumb with the wall and ceiling.

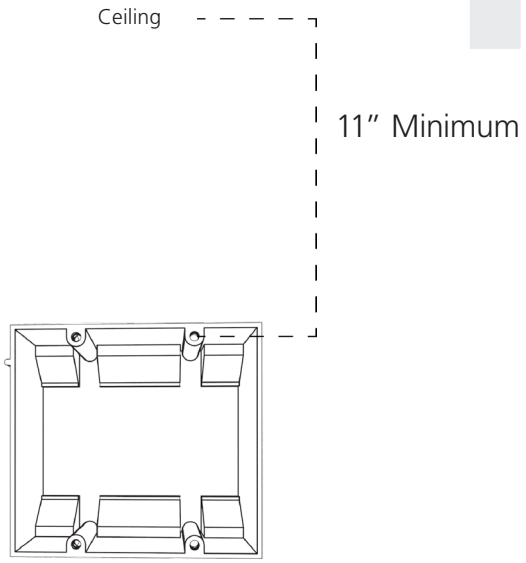

2) Run power wiring to the gang box. See the sections of this manual labeled "Inputs - System Side" for additional details, depending on your system.

CHECK YOUR WIRING

The voltage between the white and black wires should measure 105-126 volts AC in the 110 volt model, 207-253 volts AC in the 230 volt model, or Yellow & orange wires for 21.5-26.5 volts AC in the 24 volt model.

If you are using the 24 volt model, make sure that the wiring leading to the clock is from an ISOLATED transformer.

3) Detach the mounting plate from the mounting pole by unscrewing the two screws. Set the screws and pole aside for later.

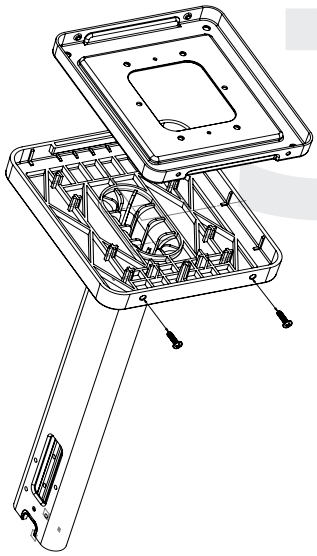

4) Attach the mounting plate to the gang box using only two of the four long, silver #6-32x1 screws. With the mounting plate as a guide, use the pencil to trace the locations of the four larger holes at the outer corners.

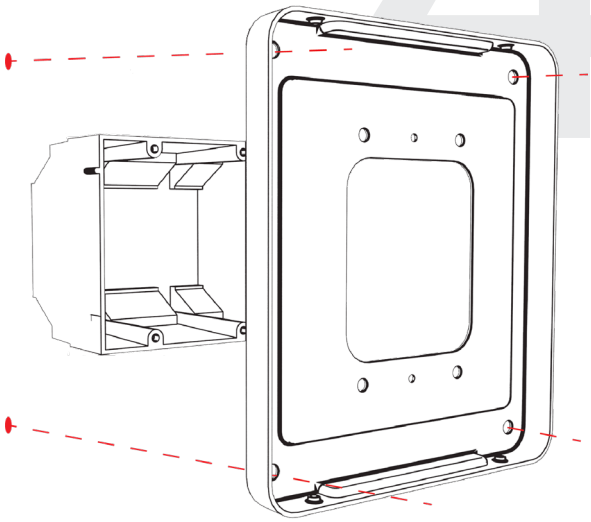

The Sapling Company, Inc.
670 Louis Drive
Warminster, PA 18974
USA

P. (+1) 215.322.6063
F. (+1) 215.322.8498
www.sapling-inc.com

Double Mount Installation

5) Remove the mounting plate and drill the four holes that were just traced. Insert the four wall anchors into the holes.

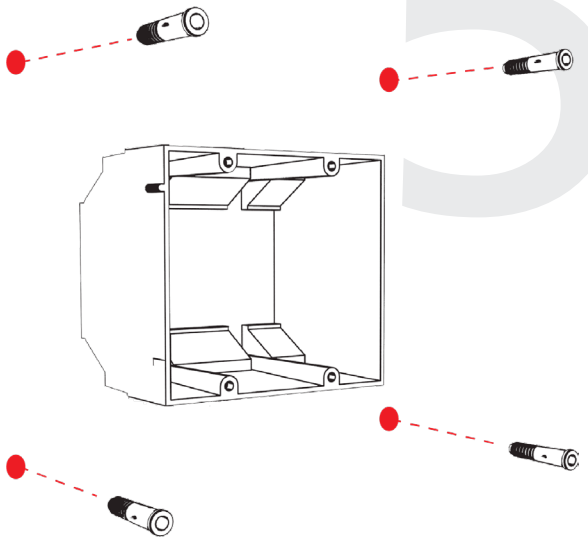

6) Reattach the mounting plate, this time using all four long, silver #6-32x1 screws, then insert the four #8 screws through the mounting plate and into the anchors.

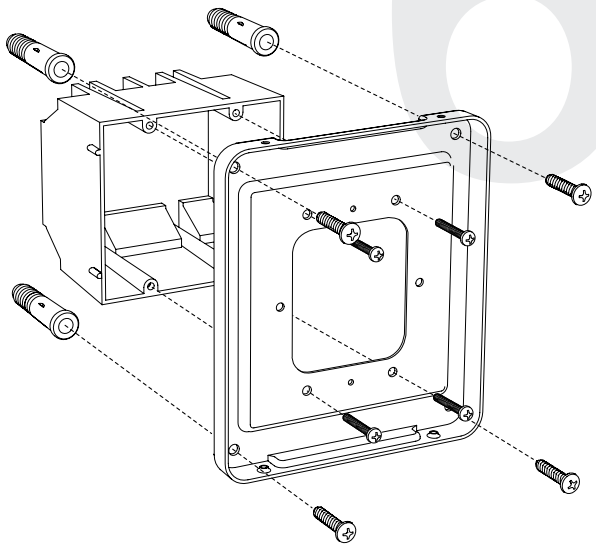

7) Thread any wiring through the mounting plate, and attach a grounding wire to the mounting plate using one of the larger centered holes and the #10-32x3/8 screw.

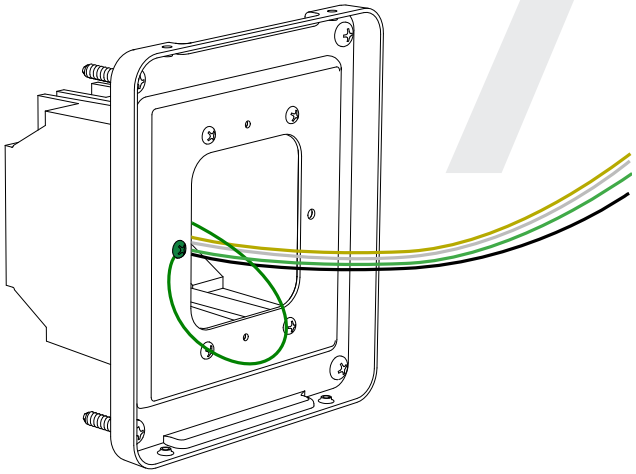

8) Use a screwdriver to remove one of the end caps. The selected end cap should match the position of the orientation of the clock on the mounting pole; for example, if you wish to attach the clock to the pole in a ceiling-mount configuration, then the top end cap should be removed. The end cap and screw that was used to secure it will not be needed again during this installation.

The Sapling Company, Inc.
670 Louis Drive
Warminster, PA 18974
USA

P. (+1) 215.322.6063
F. (+1) 215.322.8498
www.sapling-inc.com

Double Mount Installation

9) Detach the frame from the front of each clock housing by pulling the bottom and top edges away from the housing.

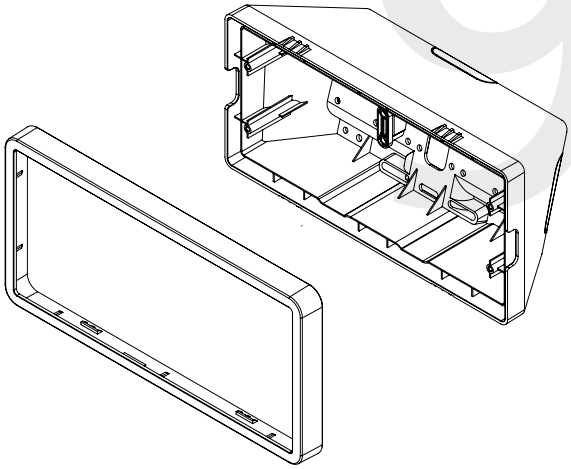

10) Insert the four #8-32x7/16 screws through the internal-tooth washers, then through each adapter, and finally into the pole. Use a screwdriver to tighten the screws so that the adapters do not move.

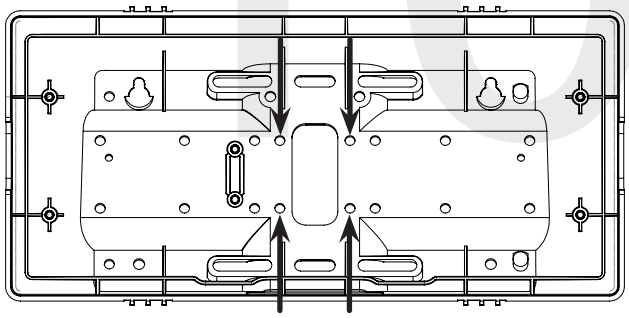

11) Attach adapters to each other using adapter tab screws, two on each side.

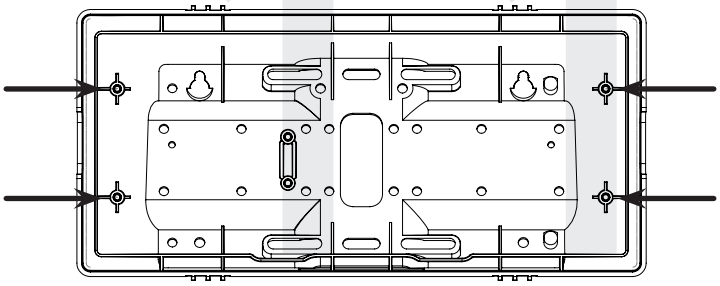

12) Thread at least fifteen inches (38.1cm) of wiring from the gang box through the bottom of the pole until each wire exits through the hole in each adapter. Secure the wires by passing them through the wire clamp.

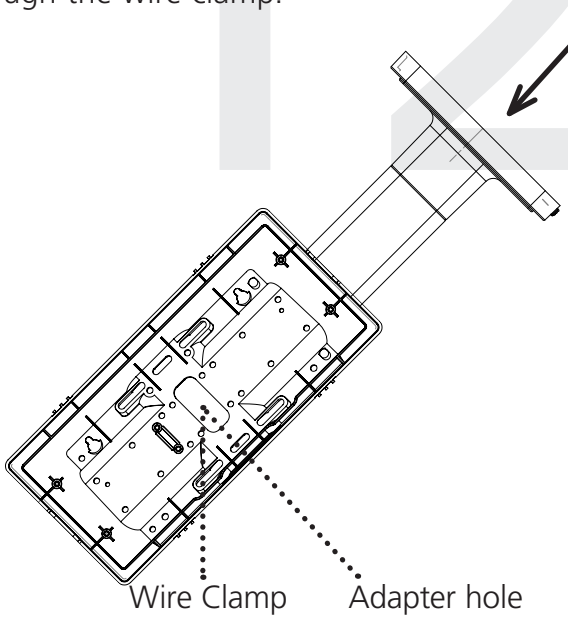

13) Detach the filter from the clock display board by pressing inward on the red tabs.

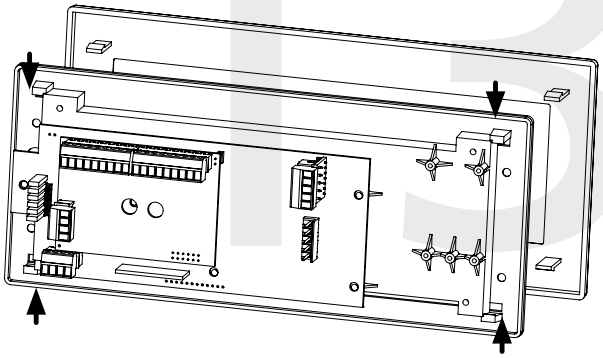

The Sapling Company, Inc.
670 Louis Drive
Warminster, PA 18974
USA

P. (+1) 215.322.6063
F. (+1) 215.322.8498
www.sapling-inc.com

Double Mount Installation

14) Attach the power wires to the port as shown below.

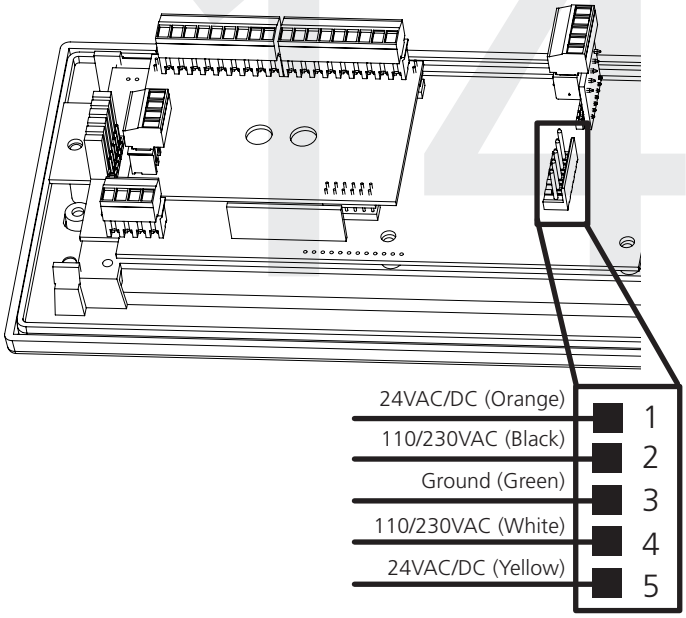

15) Use the M3/5-15x12 screws to attach each display board to the housing.

NOTE: For 2.5" Digit clocks, the holes for the screws will be on the left and right inner surfaces of the housing. For 4.0" Digit Clocks, the holes will be on the top and bottom surfaces.

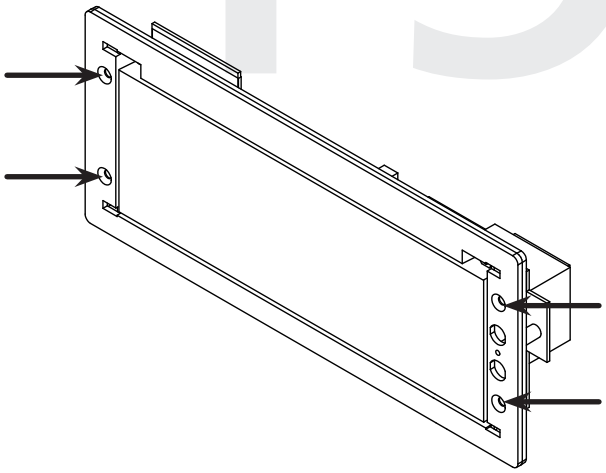

16) Use the M3.5-1.5x12 screws to attach a display board to each housing.

NOTE: For 2.5" Digit clocks, the holes for the screws will be on the left and right inner surfaces of the housing. For 4.0" Digit Clocks, the holes will be on the top and bottom surfaces.

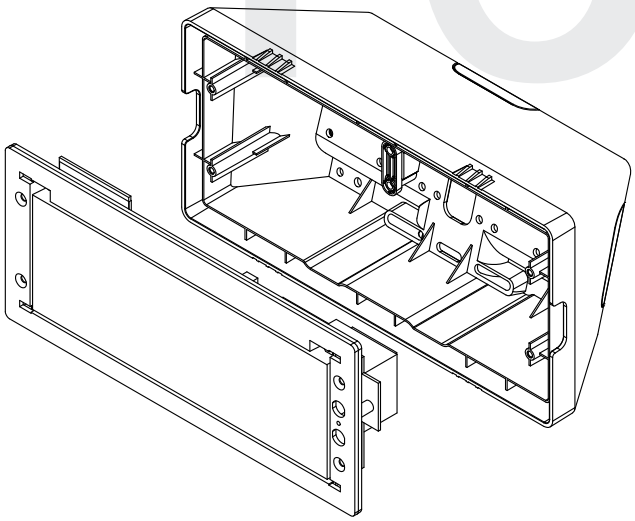

17) Remove the plastic cover from each display board.

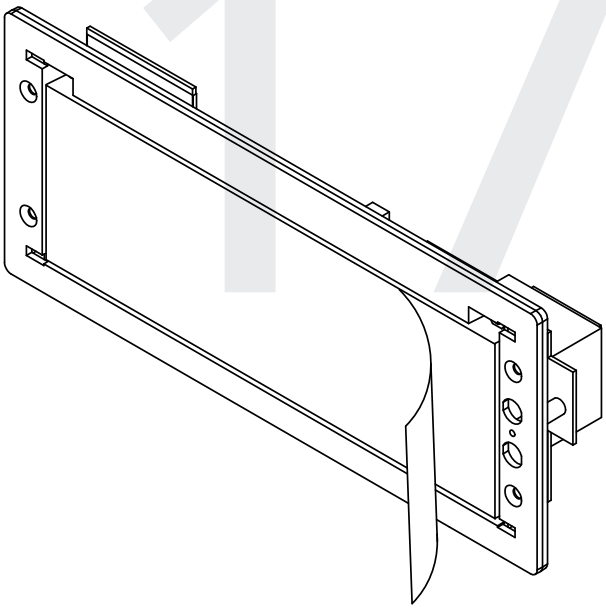

The Sapling Company, Inc.
670 Louis Drive
Warminster, PA 18974
USA

P. (+1) 215.322.6063
F. (+1) 215.322.8498
www.sapling-inc.com

Double Mount Installation

18) Place a filter over each display board. You should hear a snapping noise as the latches drop into place.

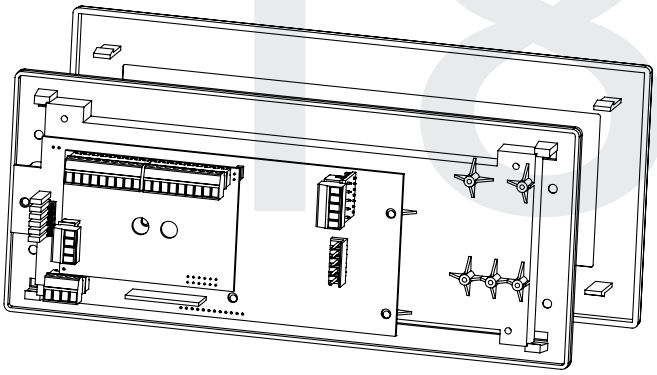

19) Place a housing frame onto each housing. You should hear a snapping noise as the latches drop into place.

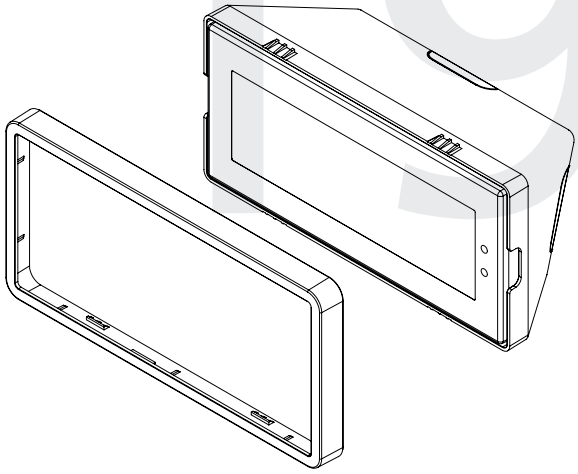

20) Hang the base of the pole on the mounting plate so that the lip is on top of the base, and the holes for the screws are on the bottom of the base. Attach the wires from the pole to the wires in the gang box, then use the two black base screws to attach the other side of the base to the mounting plate.

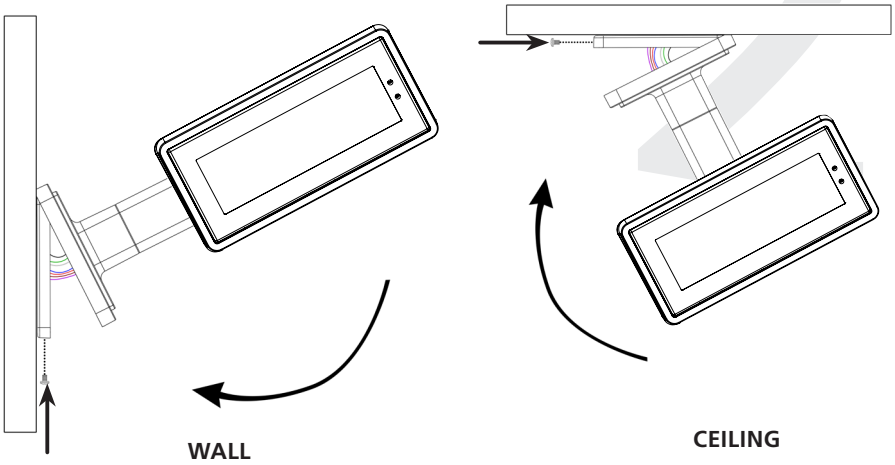

21) Power the clock. After testing the LED segments and presenting some diagnostic information, the clock will display the time based off if its internal quartz oscillator. It will correct itself to show synchronized time as soon as it receives data from a master clock.

The Sapling Company, Inc.
670 Louis Drive
Warminster, PA 18974
USA

P. (+1) 215.322.6063
F. (+1) 215.322.8498
www.sapling-inc.com

Adjustable Jumper Settings

Every version of the digital clock contains a set of jumpers which can be moved to change a particular setting. The functions and positions of each jumper are described below:

	Left Position	**Right Position**
	Pins 1 & 2	Pins 2 & 3
Jumper 1	12 Hour Time (Default)	24 Hour Time
Jumper 2	Display High Brightness (Default)	Display Low Brightness
Jumper 3	Display Time Only (Default)	Alternate display between Time and Date
Jumper 4	DO NOT TOUCH (Default)	DO NOT TOUCH
Jumper 5	DO NOT TOUCH (Default)	DO NOT TOUCH
Jumper 6	Clock accepts sync-wire inputs (Default in 3100/3300)	Clock accepts RS485 input or sbdconfig cable (Default in 3200)

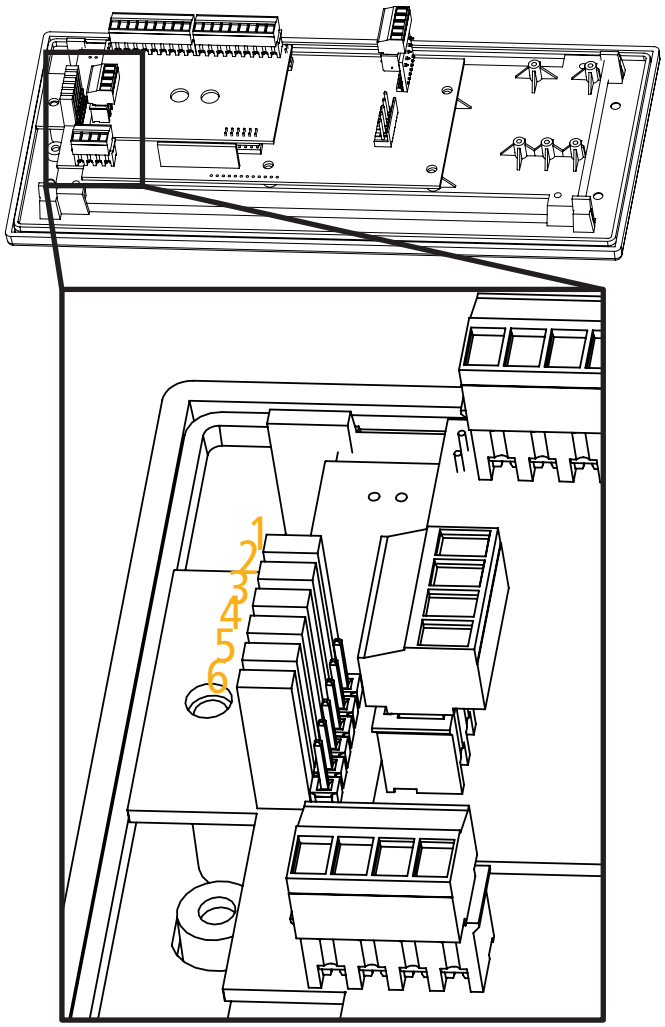

To manually enable or disable the first three jumpers, refer to the section of this manual labeled “Manual Controls” and refer to Setting 15.

The Sapling Company, Inc.
670 Louis Drive
Warminster, PA 18974
USA

P. (+1) 215.322.6063
F. (+1) 215.322.8498
www.sapling-inc.com

Temperature Sensor Installation (3200/3300 Only)

(**IMPORTANT:** Detach clock from power source before installing new circuitry. DO NOT add new circuitry while the clock is operating)

Attach the end of the Temperature Sensor Wire to the circuit board in the following manner:

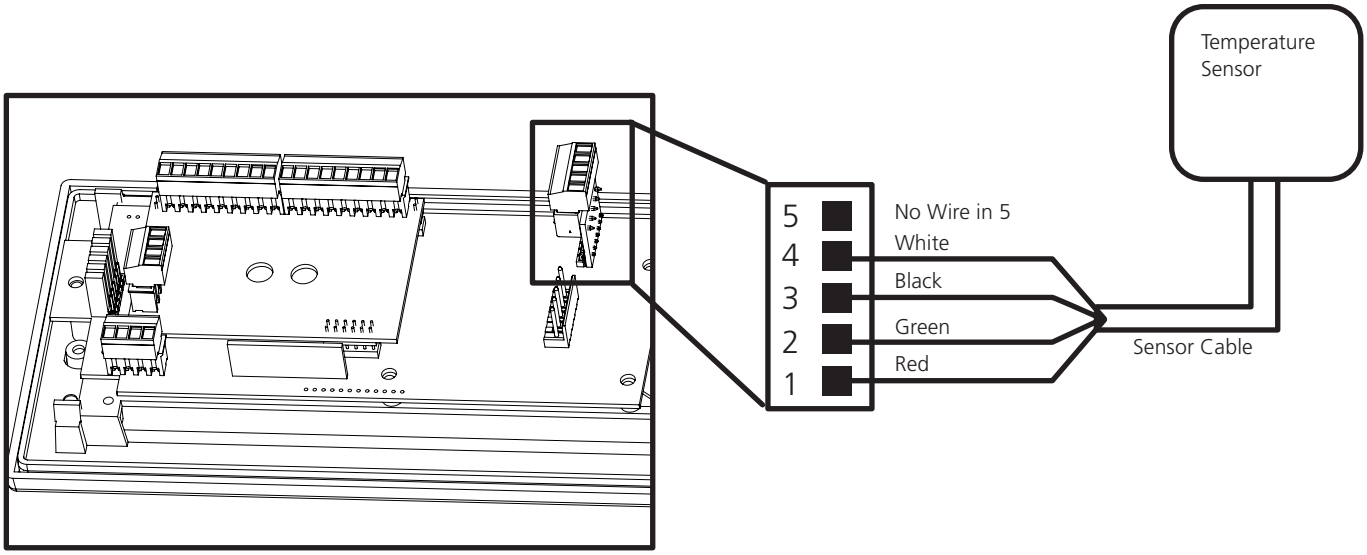

The Sensor Cable is 6 feet (1.83 meters) long, and so the sensor should be positioned within 6 feet of the clock. The cable is unshielded, 4 conductor, 22AWG (.33mm²). If longer than 6 feet is required, the wire would have to be terminated in an electrical box, and the longer wire would have to be provided by the customer.

Data from the temperature sensor will be sent to your clock when the clock is powered on. For more information on how to make the digital clock display temperature, please see the section labeled “sbdconfig - Display Settings”.

The Sapling Company, Inc.
670 Louis Drive
Warminster, PA 18974
USA

P. (+1) 215.322.6063
F. (+1) 215.322.8498
www.sapling-inc.com

Buzzer Installation (3300 Only)

(**IMPORTANT:** Detach clock from power source before installing new circuitry. DO NOT add new circuitry while the clock is operating)

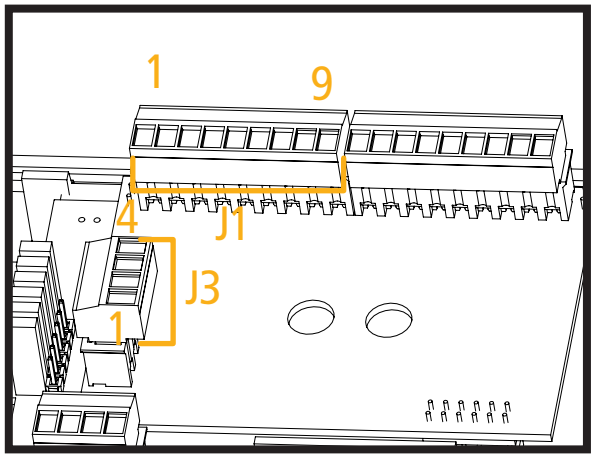

During installation, there are two port blocks mentioned. The block on the upper-left will be called J1, while the block on the bottom left will be called J3. Refer to the diagram for details. For J1, the ports in the block are listed as 1-9, starting with port 1 on the left, and ending with port 9 on the right. For J3, the ports in the block are listed as 1-4, starting with port 1 on the bottom and port 4 on the top.

The Buzzer can be installed on the clock circuit board with four easy steps:

1. Attach the long green connector to the J1 Sync Input ports.
2. Confirm that the wires are attached to holes 7 and 8. The red wire should be in hole 7. The black wire should be in hole 8.
3. Attach the short green connector to the J3 Relay Output ports.
4. Confirm that the wires are attached to holes 1 and 2. The yellow wire should be in hole 1. The black wire should be in hole 2.

To program the buzzer, connect the USB cable to the clock, log onto sbdconfig and perform the following actions:

1. Click on the Elapsed Timer or Inputs tab.
2. Find the drop-down menu next to “On Countdown complete, close” and select “Relay 2”
3. In “for ____ seconds” set the amount of time that you wish the buzzer to sound when the countdown ends. The number must be a whole number from 1 to 60.
4. Press the Update Clock button.

For information on sbdconfig, refer to the sections labeled sbdconfig - Elapsed Timer” or “sbdconfig - Inputs”

Alternative Inputs - System-Side

In instances where a wireless digital clock is being integrated with an existing clock system, or instances where the clock is installed beyond the signal range of other wireless time transmitters, it is possible to configure the clock to accept time data from various other systems, depending on the model. The following pages demonstrate the wiring setups for these models, and the applicable clocks for which they apply.

The Sapling Company, Inc.
670 Louis Drive
Warminster, PA 18974
USA

P. (+1) 215.322.6063
F. (+1) 215.322.8498
www.sapling-inc.com

Wiring Diagram for 110VAC/230VAC

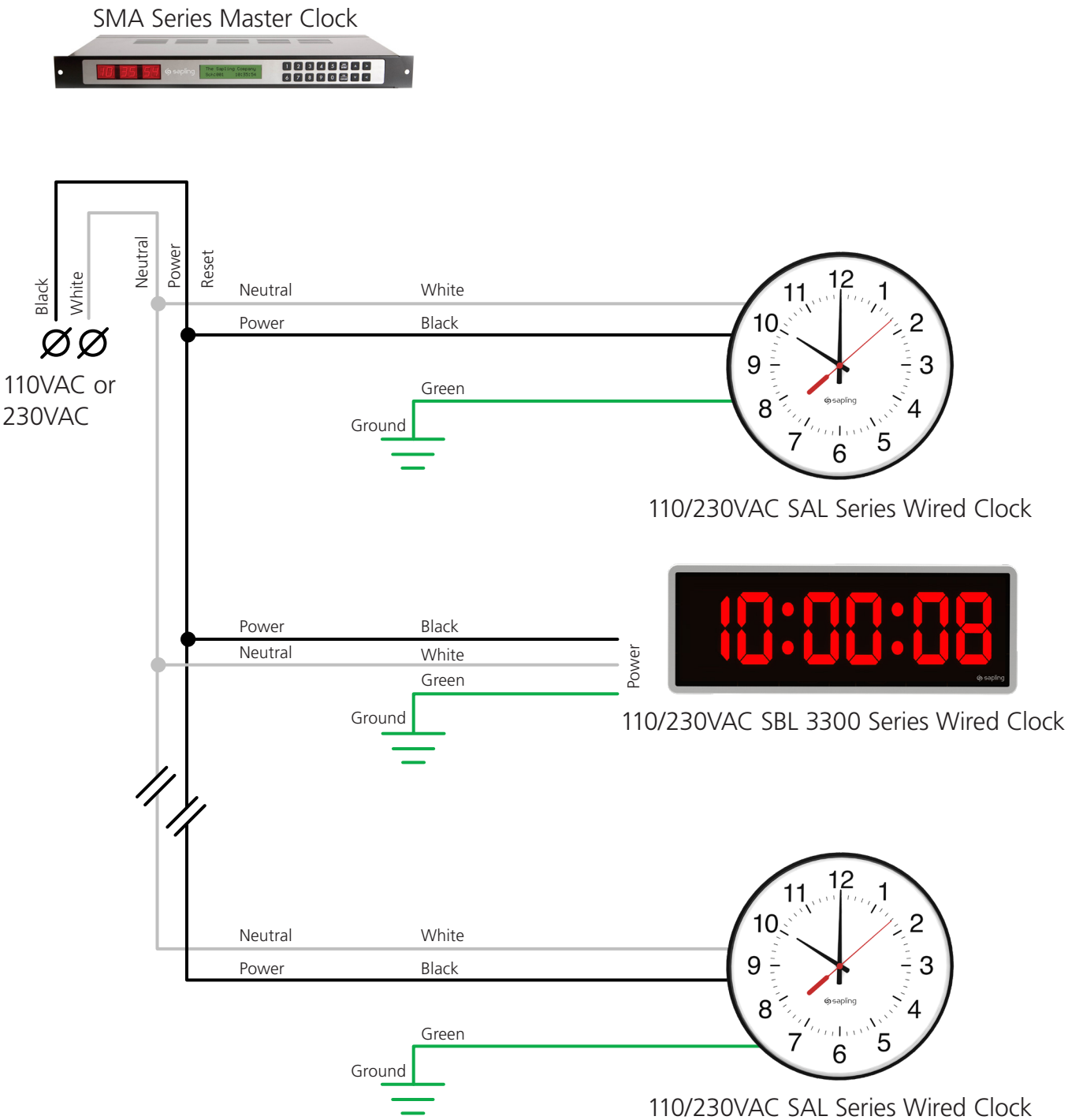

The Sapling Company, Inc.
670 Louis Drive
Warminster, PA 18974
USA

P. (+1) 215.322.6063
F. (+1) 215.322.8498
www.sapling-inc.com

Wiring Diagram for 24VAC/24VDC

SMA Series Master Clock

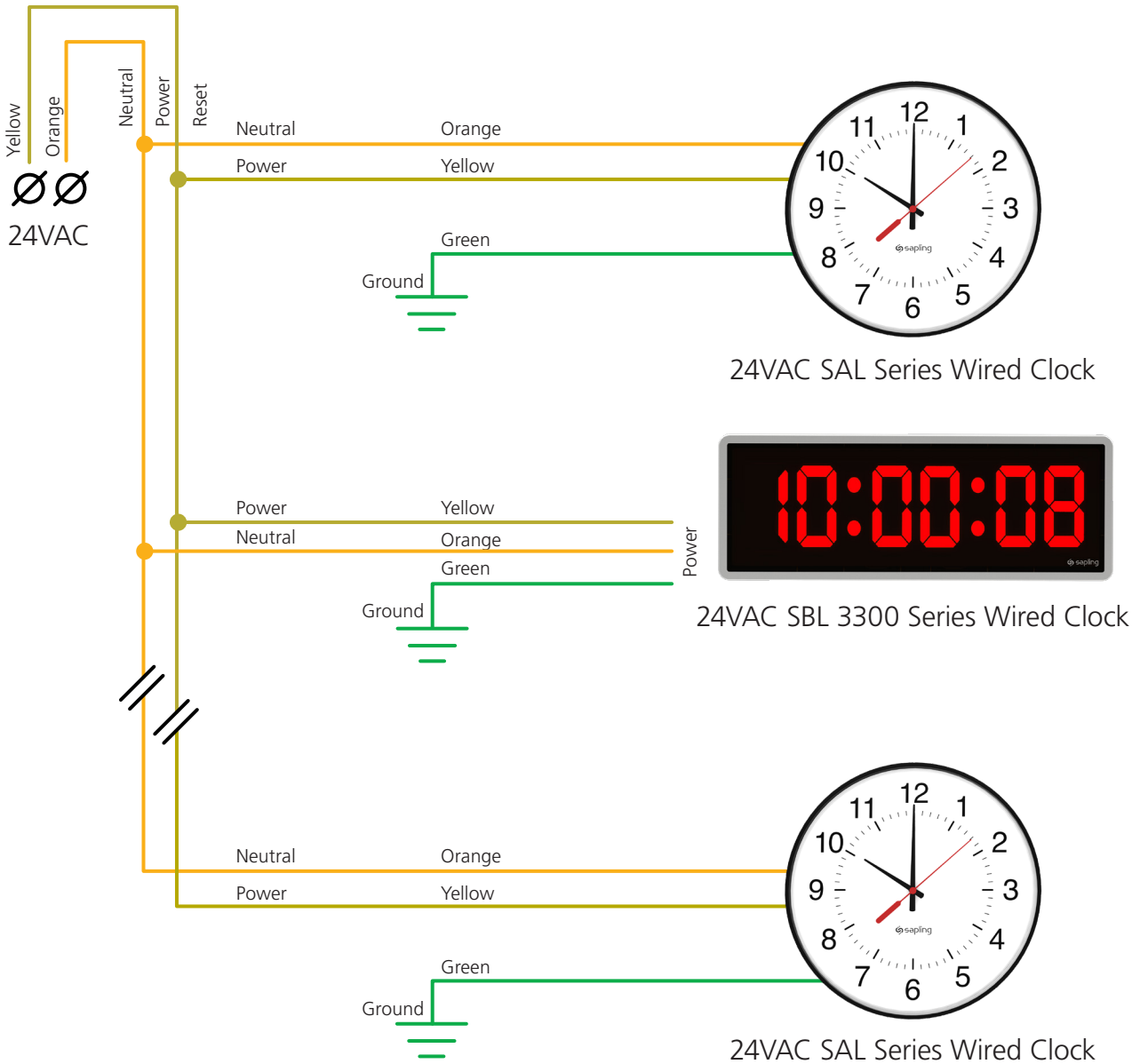

The Sapling Company, Inc.
670 Louis Drive
Warminster, PA 18974
USA

P. (+1) 215.322.6063
F. (+1) 215.322.8498
www.sapling-inc.com

Alternative Inputs - Clock-Side - Sync-Wire (3300 Only)

In instances where a 3300 wireless digital clock is being integrated with an existing clock system, or instances where the clock is installed beyond the signal range of other wireless time transmitters, it is possible to configure the clock to accept time data from a traditional sync-wire system.

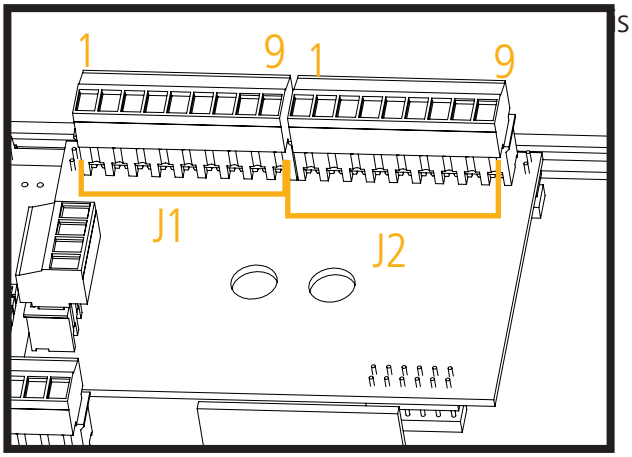

Inputs for sync-wire protocols are located on the upper-port block on the back of the clock. For this manual, the ports in each block are listed as 1-9, starting with port 1 on the left, and ending with port 9 on the right.

There are two port blocks. In this manual, the block on the left will be called J1, while the block on the right will be called J2. Refer to the diagram for details.

The diagrams on the following pages indicate how wires should be run between the various ports on the clock and the network to allow for the use of Sync-wire protocols.

Before a clock can use these protocols, it must be configured to accept the intended protocol as its input through either the front buttons or sbdconfig. Refer to the sections “Manual Controls” or “sbdconfig - Clock Settings”

59 Minute Correction

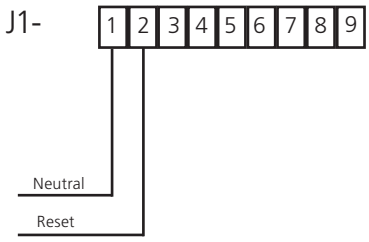

110VAC or
230VAC Interface

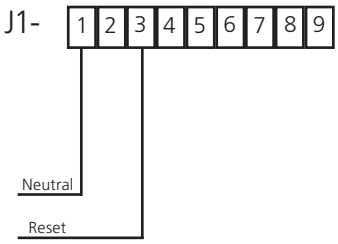

24VAC Interface

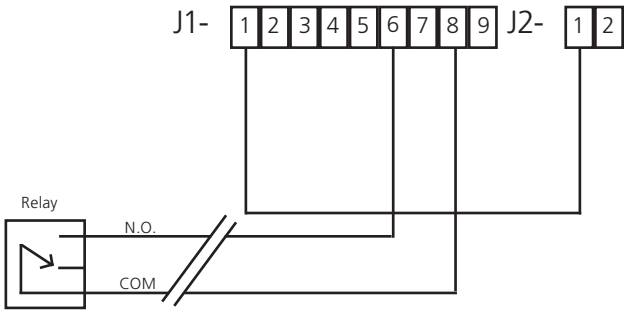

Dry Contact Closure

Description:

59 Minute Correction - 110VAC or 230VAC or 24VAC 60 Hz is used to run the clock normally. Applying an eight (8) second reset signal from 57 minutes and 54 seconds will cause an hourly correction. Applying a fourteen (14) second reset signal from 5:57:54 will cause a daily correction.

The Sapling Company, Inc.
670 Louis Drive
Warminster, PA 18974
USA

P. (+1) 215.322.6063
F. (+1) 215.322.8498
www.sapling-inc.com

Alternative Inputs - Clock-Side - Sync-Wire

58 Minute Correction

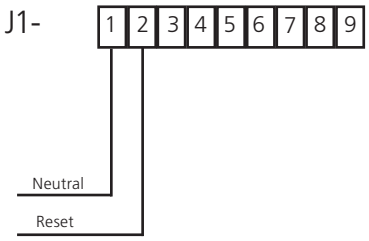

110VAC or
230VAC Interface

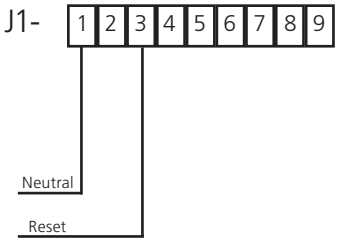

24VAC Interface

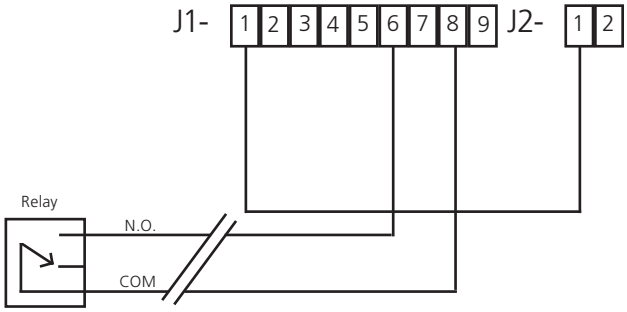

Dry Contact Closure

Description:

110VAC or 230VAC or 24VAC 60 Hz is used to run the clock normally. Refer to the table below for the four variations on 58 minute correction:

58th minute (1) - The hourly correction for 55 seconds every hour from XX:58:05 to XX:59:00. The daily correction (5 a.m. & 5 p.m.) is ten correction cycles sent to the relay (each for 95 seconds) beginning at 5:05:00, 5:07:00, 5:09:00, 5:11:00, 5:13:00, 5:15:00, 5:17:00, 5:19:00, 5:21:00, and 5:23:00.
58th minute (2) - The hourly correction for 60 seconds every hour from XX:58:00 to XX:59:00. The daily correction (5 a.m. & 5 p.m.) is twelve correction cycles sent to the relay (each for 65 seconds on and 25 seconds off) beginning at 5:05:00 to 5:22:35.
58th minute (3) - The hourly correction for 60 seconds every hour from XX:58:00 to XX:59:00. The daily correction (5 a.m. & 5 p.m.) is twelve correction cycles sent to the relay (each for one minute on and two minutes off) beginning at 5:06:00.
58th minute (4) - The hourly correction for 55 seconds every hour from xx:58:05 to XX:59:00. The daily correction (5 a.m. & 5 p.m.) is 12 correction cycles for 55 seconds. The timings will be 05:03:05, 05:07:05, 05:11:05, 05:15:05, 05:19:05, 05:23:05, 05:27:05, 05:31:05, 05:35:05, 05:39:05, 05:43:05 and 05:47:05.

The Sapling Company, Inc.
670 Louis Drive
Warminster, PA 18974
USA

P. (+1) 215.322.6063
F. (+1) 215.322.8498
www.sapling-inc.com

Alternative Inputs - Clock-Side - Sync-Wire

National Time/Rauland

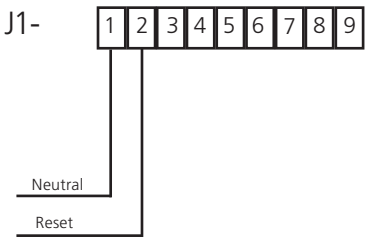

110VAC or
230VAC Interface

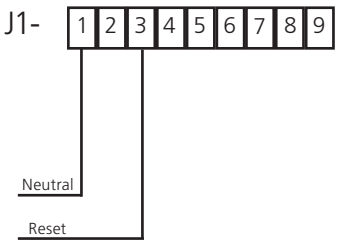

24VAC Interface

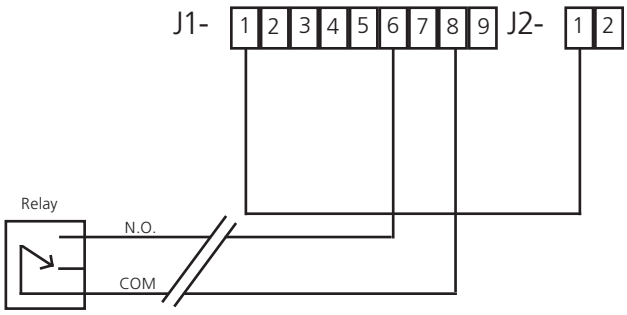

Dry Contact Closure

Description:

National Time/Rauland - 110VAC or 230VAC or 24VAC 60 Hz is used to run the clock normally. Applying a 25 second reset signal when minutes equal 00 and seconds equal 00 will cause an hourly correction. Applying a 24 minute reset signal when hours equal 06 or 18 and minutes equal 00 and second equals 25 will cause a daily correction.

Rauland Digital

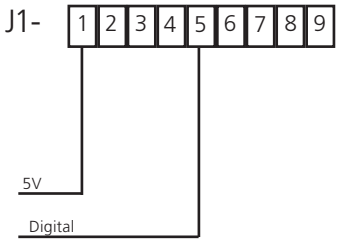

Description:

Rauland Digital - Applying a half second pulse for every minute to the Dig. Line will bring the clock to the correct time. The clock will jump to the correct time at the end of the correction pulse.

Note: For better synchronization, it is recommended to work on a 60 Hz time base.

Note: Use only an isolated transformer to run the clock in 24 volt mode.

The Sapling Company, Inc.
670 Louis Drive
Warminster, PA 18974
USA

P. (+1) 215.322.6063
F. (+1) 215.322.8498
www.sapling-inc.com

Alternative Inputs - Clock-Side - Sync-Wire

Dukane

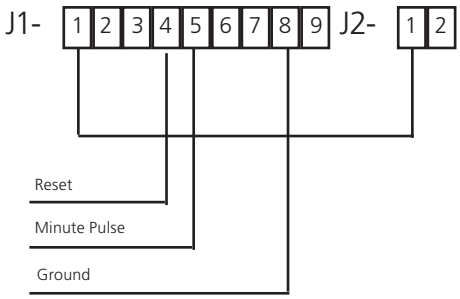

Description:

Dukane - Applying a 4-10 millisecond pulse on the minute line will increment the clock in one minute. Applying a 12-50 millisecond pulse on the reset line will bring the clock back to 12:00 a.m.

Midnight Reset or Once a Day Pulse

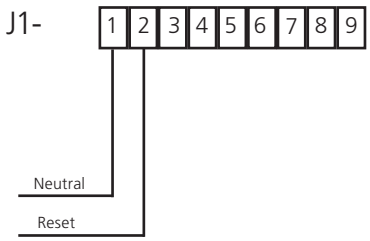

110VAC or
230VAC Interface

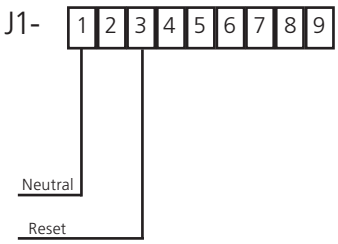

24VAC Interface

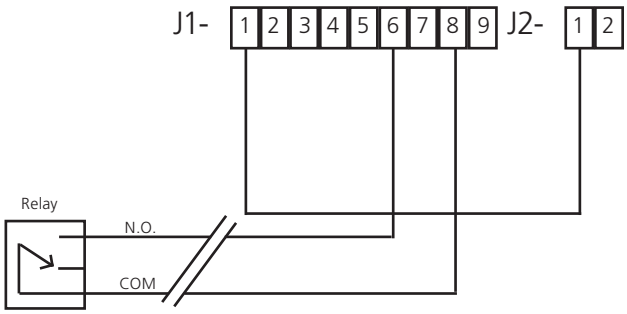

Dry Contact Closure

Description:

Midnight Reset or Once a Day Pulse - Applying a pulse for more than two (2) seconds will bring the clock to the correct time.

The Sapling Company, Inc.
670 Louis Drive
Warminster, PA 18974
USA

P. (+1) 215.322.6063
F. (+1) 215.322.8498
www.sapling-inc.com

Alternative Inputs - Clock-Side - RS485 (3200/3300 Only)

RS485

In instances where a 3200 or 3300 wireless digital clock is being integrated with an existing clock system, or instances where the clock is installed beyond the signal range of other wireless time transmitters, it is possible to configure the clock to accept time data from a wired RS485 system.

The port block on the bottom left side of the circuit board will be called J7. Refer to the diagram for details. For J7, the ports in the block are listed as 1-4, starting with port 1 on the left and port 4 on the right. Inputs go into J7 ports 1 and 2.

For information on the rest of the RS485 system, see the page " Alternative Inputs - System Side -RS485"

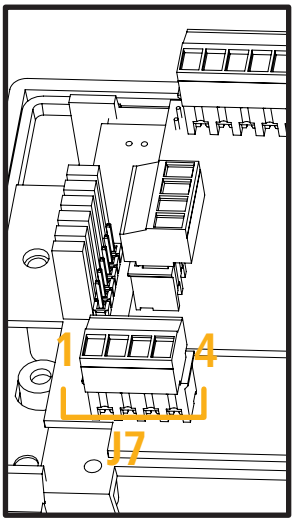

Inputs - Clock-Side - User Inputs

User Inputs

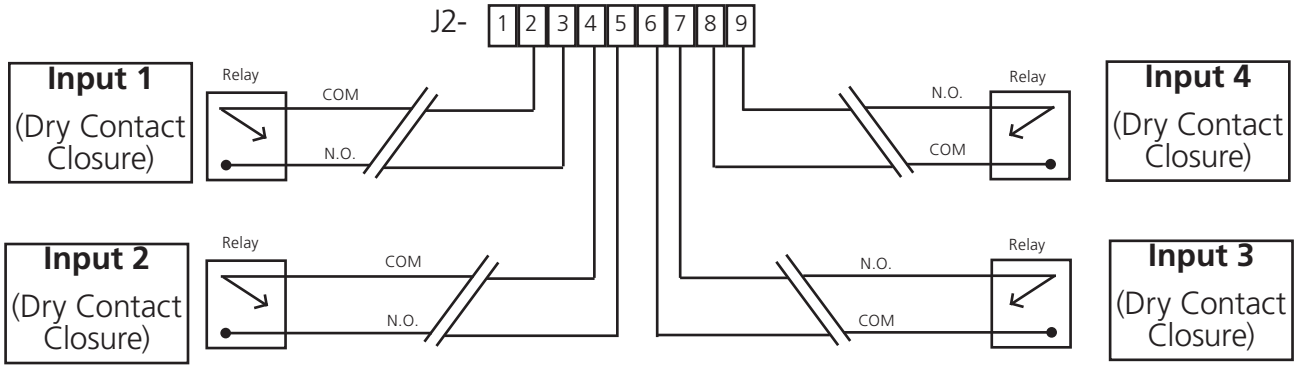

Use a dry contact closure between any of the two lines shown above to activate one of the numbered user inputs. This input is a *dry contact closure*, which means that **the user should not be providing external power on either of the lines leading from the relay to the clock.** The dry contact closure only needs to complete the circuit when activated, and can be a simple switch or button.

To configure what a given input does to the clock when activated, refer to the section of this manual labeled "sbdconfig - Inputs."

The Sapling Company, Inc.
670 Louis Drive
Warminster, PA 18974
USA

P. (+1) 215.322.6063
F. (+1) 215.322.8498
www.sapling-inc.com

Outputs (3300 Only)

RS485 and 2-Wire Digital - Master Mode

During a loss of communication with the Master Clock, the 3300 digital clock can act as a temporary, backup master clock for other clocks in the system. The port block on the bottom left side of the circuit board will be called J7. Refer to the diagram for details. For J7, the ports in the block are listed as 1-4, starting with port 1 on the left and port 4 on the right.

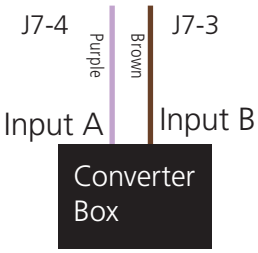

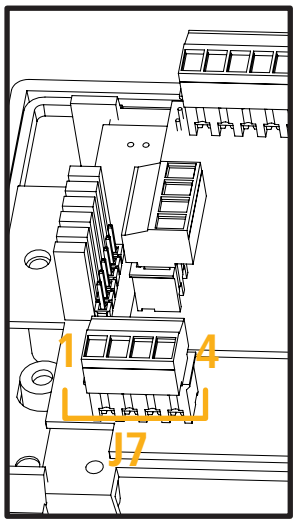

Output Relays

(**IMPORTANT:** Detach clock from power source before installing new circuitry. DO NOT add new circuitry while the clock is operating)

The port block on bottom left will be called J3. Refer to the diagram for details. For J3, the ports in the block are listed as 1-4, starting with port 1 on the bottom and port 4 on the top.

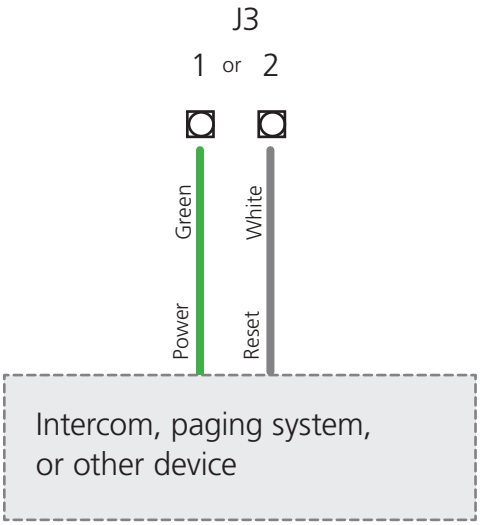

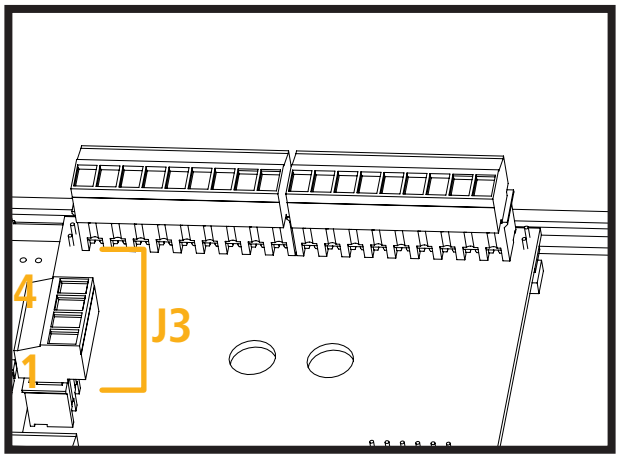

The Sapling Company, Inc.
670 Louis Drive
Warminster, PA 18974
USA

P. (+1) 215.322.6063
F. (+1) 215.322.8498
www.sapling-inc.com

Manual Controls (3300 Only)

The purpose of this section is to get a new digital clock up and running using the manual controls on the front of the digital clock. If you would prefer to program the master clock through the convenience of a graphic interface, go to the section labeled "sbdconfig - Setting up sbdconfig.exe" for an alternate programming method.

Although **we always recommend that the Digital Clock receive time data from an accurate time source**, if there is a need for the digital clock to act as a standalone device, the Digital Clock's internal real-time clock can be set manually. This can be done by pressing the top button to advance the hour, and the bottom button to advance the minute.

Top Button (Hour)

Bottom Button (Minute)

For all other settings, press and release both buttons simultaneously. To return the LED display to showing the time, repeatedly press the top button until all of the setting codes have been cycled through. The last code should be 41--99.

The numbers shown on the left are examples. Going down the list and entering every one of the examples exactly as shown will cause the clock to malfunction or use incorrect data. Program your clock setting based off of the instructions in the description on the right.

1 10

Setting 1 - Set Year

Use the bottom button to scroll from 00 through 99. This permits the user to select a year from 2000 to 2099.

2 11

Setting 2 - Set Month

Use the bottom button to scroll from 01 through 12. This permits the user to select a month from January (01) to December (12).

3 28

Setting 3 - Set Day of the Month

Use the bottom button to scroll from 01 through 31. This permits the user to select a day from the 1st of the month to the 31st of the month.

4 24

Setting 4 - 12/24 Hour Mode

Press the bottom button to switch between 12 and 24.
12 causes the master clock to display time in 12 Hour mode.
24 causes the master clock to display time in 24 Hour mode.

The Sapling Company, Inc.
670 Louis Drive
Warminster, PA 18974
USA

P. (+1) 215.322.6063
F. (+1) 215.322.8498
www.sapling-inc.com

Manual Controls

The numbers shown on the left are examples. Going down the list and entering every one of the examples exactly as shown will cause the clock to malfunction or use incorrect data. Program your clock setting based off of the instructions in the description on the right.

5 d

Setting 5 - Daylight Saving Time

Press the bottom button to switch between “d’ or “E”
“d” disables Daylight Saving Time
“E” enables Daylight Saving Time

NOTE: Daylight Savings Time set through this method begins on the second Sunday of March at 2:00 AM, and ends on the first Sunday of November at 2:00 AM. If your state/province/country follows a different set of DST rules, please use sbdconfig to configure this setting.

6 d

Setting 6 - Alternate Date and Time

Press the bottom button to switch between “d’ or “E”
“d” disables Alternating Time and Date
“E” enables Alternating Time and Date

NOTE: Alternating Time and Date set through this method displays the time for seven seconds, then displays the date for three seconds, then repeats. To make the time or date appear for longer or shorter periods of time, please use sbdconfig to configure this setting.

7 E

Setting 7 - Date Format

Allows the user to chose the Date format used when the clock is set to display alternating Date/Time. Press the bottom button to switch between “A” or “E”

“A” Stands for American Style - Month:Day:Year

“E” Stands for European Style - Day:Month:Year

On a 4-digit clock, only the day and month will be displayed.

8 02

Setting 8 - Display Brightness

Allows the user to choose the brightness level for the clock’s main display. Press the bottom button to cycle between values 00, 01, and 02. This values correspond to Low, Medium, and High (Default)

A user has the ability to create a brightness schedule for the clock, but the parameters for this schedule must be set using the sbdconfig software.

The Sapling Company, Inc.
670 Louis Drive
Warminster, PA 18974
USA

P. (+1) 215.322.6063
F. (+1) 215.322.8498
www.sapling-inc.com

Manual Controls

The numbers shown on the left are examples. Going down the list and entering every one of the examples exactly as shown will cause the clock to malfunction or use incorrect data. Program your clock setting based off of the instructions in the description on the right.

9 1

Setting 9 - Clock I.D. Number

Press the bottom button to advance the ID number of the clock. This accepts the ID numbers 1 through 999.
The ID Number is used for displaying text messages like 911, bELL, and FirE. Consult the Master Clock manual for more information.

This value can also be set through sbdconfig.

10 02

Setting 10 - Zone Number

Press the bottom button to advance the ID number of the clock. This accepts the Zone Numbers 01 through 99.
The Zone Number is used for displaying text messages like 911, bELL, and FirE. Consult the Master Clock manual for more information.

This value can also be set through sbdconfig.

11 01

Setting 11 - RS485 Data Transmission Rate

Allows the user to set the data transmission rate for RS485 output on 3300 digital clock models. Press the bottom button to switch between the numerical options below:

00 - No data is sent	05 - Data sent every 30 seconds	10 - Data sent every 15 minutes
01 - Data sent every second	06 - Data sent every minute	11 - Data sent every 30 minutes
02 - Data sent every 5 seconds	07 - Data sent every 2 minutes	12 - Data sent every hour
03 - Data sent every 10 seconds	08 - Data sent every 5 minutes	NOTE: Data is sent ***once*** per each of the ranges listed (except in 00).
04 - Data sent every 15 seconds	09 - Data sent every 10 minutes	

13 E

Setting 13 - Enable Loss of Communication Alert

Press the bottom button to switch between “d’ or “E”
“d” disables Loss of Communication Alert
“E” enables Loss of Communication Alert

When Loss of Communication Alert is enabled, the colons on the display will blink if the digital clock fails to synchronize with the master clock within a set amount of time. This amount of time is set through Setting 14.

The Sapling Company, Inc.
670 Louis Drive
Warminster, PA 18974
USA

P. (+1) 215.322.6063
F. (+1) 215.322.8498
www.sapling-inc.com

Manual Controls

The numbers shown on the left are examples. Going down the list and entering every one of the examples exactly as shown will cause the clock to malfunction or use incorrect data. Program your clock setting based off of the instructions in the description on the right.

14 06

Setting 14 - Loss of Communication Alert Additional Configuration

Allows the user to determine how much time should pass without a synchronization signal from the master clock before the Loss of Communication Alert is activated. Press the bottom button to switch between the numerical options below:

01 - Activates after 5 minutes	05 - Activates after 45 minutes	09 - Activates after 180 minutes
02 - Activates after 10 minutes	06 - Activates after 60 minutes	10 - Activates after 240 minutes
03 - Activates after 15 minutes	07 - Activates after 90 minutes	Note: Alert activates after signal loss for the time limit specified
04 - Activates after 30 minutes	08 - Activates after 120 minutes	

15 d

Setting 15 - Enable Circuit Board Jumpers

Press the bottom button to switch between “d’ or “E”
“d” disables the jumpers
“E” enables the jumpers

NOTE: Enabling the jumpers overrides Settings 4, 6, and 8. Refer to the section of this manual labeled “Adjustable Jumper Settings” for information on the function of each jumper.

The Sapling Company, Inc.
670 Louis Drive
Warminster, PA 18974
USA

P. (+1) 215.322.6063
F. (+1) 215.322.8498
www.sapling-inc.com

Manual Controls

The numbers shown on the left are examples. Going down the list and entering every one of the examples exactly as shown will cause the clock to malfunction or use incorrect data. Program your clock setting based off of the instructions in the description on the right.

20 7

Setting 20 - **Set the Programmable Relay 1**

Press the bottom button to scroll from 1 to 9 or **d**. These numbers correspond to different protocols, specifically:

1) **58th Minute (1) -** The clock performs an hourly correction that takes 55 seconds and occurs between XX:58:05 and XX:59:00 of every hour. It also performs two daily corrections: one at 5:00AM and another at 5:00PM. Each daily correction is ten relay cycles, each cycle is 95 seconds long, and the cycles begin at 5:05AM/PM, 5:07, 5:09, 5:11, 5:13, 5:15, 5:17, 5:19, 5:21, and 5:23 respectively.

2) **58th Minute (2) -** The clock performs an hourly correction that takes 60 seconds and occurs between XX:58:00 and XX:59:00. It also performs two daily corrections: one at 5:00AM and one at 5:00PM. Each daily correction is made of twelve relay cycles, and each cycle consists of 65 seconds on and 25 seconds off

3) **58th Minute (3) -** The clock performs an hourly correction that takes 60 seconds and occurs between XX:58:00 and XX:59:00. It also performs two daily corrections: one at 5:00AM and one at 5:00PM. Each daily correction is made of twelve relay cycles, and each cycle consists of 60 seconds on and 120 seconds off.

4) **58th Minute (4) -** The clock performs an hourly correction that takes 55 seconds and occurs between XX:59:05 and XX:59:00. It also performs two daily corrections: one at 5:00AM and one at 5:00PM. Each daily correction is made of twelve relay cycles, each cycle is 55 seconds long, and the cycles begin at 5:03:05AM/PM, 5:07:05, 5:11:05, 5:15:05, 5:19:05, 5:23:05, 5:27:05, 5:31:05, 5:35:05, 5:39:05, 5:43:05, and 5:47:05 respectively.

5) **59th Minute -** The clock performs an hourly correction that takes 8 seconds and occurs between XX:57:54 and XX:58:02. It also performs two daily corrections: one at 5:00AM and one at 5:00PM. Each daily correction is a single 14 second pulse which lasts from 5:57:54 to 5:58:08.

6) **National time & Rauland (1) -** The clock performs an hourly correction that takes 25 seconds and occurs between XX:00:00 and XX:00:25. It also performs two daily corrections: one at 6:00AM and one at 6:00PM. Each daily correction is made of twenty four relay cycles consisting of 25 seconds on, followed by 35 seconds off.

7) **National Time & Rauland (2) -** The clock performs an hourly correction that takes 25 seconds and occurs between XX:00:00 and XX:00:25. It also performs two daily corrections at 6:00:25AM and 6:00:25PM. Each daily correction is a single 24 minute pulse which lasts from 6:00:25AM/PM to 6:24:25.

8) **Rauland Digital -** The clock will reset the secondary clock to 12:00:00AM, then advance the time on the secondary clock by one minute for every 0.5 seconds that the Digital line is shorted to ground.

9) **Once a Day Pulse -** The clock relay will close at a specific time and for an amount of time decided by the clock circuit settings (Settings 21-24 for circuit 1, or 26-29 for circuit 2).

10) **Disable Relay -** The relay is disabled. This is the default value for this function.

The Sapling Company, Inc.
670 Louis Drive
Warminster, PA 18974
USA

P. (+1) 215.322.6063
F. (+1) 215.322.8498
www.sapling-inc.com

Manual Controls

The numbers shown on the left are examples. Going down the list and entering every one of the examples exactly as shown will cause the clock to malfunction or use incorrect data. Program your clock setting based off of the instructions in the description on the right.

21 14

Setting 21 - Once a Day Pulse Output - Set Hour

This setting only appears if "9" was selected under Setting 20. Press the bottom button to scroll from 00 to 23. For example, a value of 13 is the same as 1:00PM. **Set to 0 by default**.

22 00

Setting 22 - Once a Day Pulse Output - Set Minutes

This setting only appears if "9" was selected under Setting 20. Press the bottom button to scroll from 00 to 59. **Set to 0 by default**.

23 30

Setting 23 - Once a Day Pulse Output - Set Seconds

This setting only appears if "9" was selected under Setting 20. Press the bottom button to scroll from 00 to 59. **Set to 0 by default**.

24 05

Setting 24 - Once a Day Pulse Output - Set Pulse Duration

This setting only appears if "9" was selected under Setting 20. Press the bottom button to scroll from 00 to 99. For example, a value of 98 will set a pulse duration of 1 minute and 38 seconds. **Set to 3 by default**.

30 1

Setting 30 - Set Sync Wire Time Input Type

Allows the user to configure the sync wire type used as an Input.

Press the bottom button to scroll from 1 to 9 or **d**. These numbers correspond to the different protocols listed below. **Set to 8 by default**.

d - Disable Auxiliary Input	01 - 58 Minute Correction (1)	02 - 58 Minute Correction (2)	09 - Once a Day Pulse
03 - 58 Minute Correction (3)	04 - 58 Minute Correction (4)	05 - 59 Minute Correction	
06 - National Time/Rauland	07 - Dukane Digital	08 - Rauland Digital	

31 14

Setting 31 - Once a Day Pulse Input - Set Hour

This setting only appears if "8" was selected under Setting 20. Press the bottom button to scroll from 00 to 23. For example, a value of 13 is the same as 1:00PM. **Set to 0 by default**.

32 00

Setting 32 - Once a Day Pulse Input - Set Minutes

This setting only appears if "8" was selected under Setting 20. Press the bottom button to scroll from 00 to 59. **Set to 0 by default**.

33 30

Setting 33 - Once a Day Pulse Input - Set Seconds

This setting only appears if "8" was selected under Setting 20. Press the bottom button to scroll from 00 to 59. **Set to 0 by default**.

The Sapling Company, Inc.
670 Louis Drive
Warminster, PA 18974
USA

P. (+1) 215.322.6063
F. (+1) 215.322.8498
www.sapling-inc.com

Manual Controls

The numbers shown on the left are examples. Going down the list and entering every one of the examples exactly as shown will cause the clock to malfunction or use incorrect data. Program your clock setting based off of the instructions in the description on the right.

The settings below only apply to Sapling analog clocks using wired communication protocols such as 2-Wire Digital or RS485. The digital clock cannot send these commands to Wireless, IP or Wi-Fi clocks.

40 d

Setting 40 - Command Analog Clock to Perform Diagnostic

Allows the user to send a command to all analog clocks receiving data from this digital clock. The available commands are the diagnostic tests listed in the table below:

01 - Diagnostic 1 - Protocol Verification	03 - Diagnostic 3 - Resets clock to Manufacturing Default and sets all hands to 12	05 - Diagnostic 4 - Full Mechanical and Electrical Test. Begins automatically.
02 - Diagnostic 2 - Comprehensive Test	04 - Diagnostic 4 - Full Mechanical and Electrical Test. Press button on analog to start.	09 - Override diagnostic tests and return analog clocks to showing master clock time.
d - Does not send a command		

Details on the function of each diagnostic test can be found in the analog clock manual.

41 60

Setting 41 - Diagnostic Results Display Duration

This setting determines how long the results of a diagnostic test will remain on the face of an analog clock. Due to the nature of the tests, this time period only applies if values 01 or 02 were selected for Setting 40.

Press the bottom button to scroll from 00 to 99. For example, a value of 98 will set a display duration of 1 minute and 38 seconds.

Pressing the top button after Setting 41 will cause the clock to return to the normal time display.

The Sapling Company, Inc.
670 Louis Drive
Warminster, PA 18974
USA

P. (+1) 215.322.6063
F. (+1) 215.322.8498
www.sapling-inc.com

sbdconfig - Connecting to the Clock

The USB to RS485 converter cable has two ends.

One end is a USB-A adapter and will work with any USB-A port. USB-A is a rectangular-shaped port and is included on most desktop and laptop computers produced since 2000. When inserting the USB-A adapter into the USB-A port, confirm that the metal contacts on the adapter are facing the metal contacts on the port connector. The adapter is not reversible, and will not function if installed upside down.

The other end of the cable is an RS485 adapter. It should be installed in the RS485 port on the digital clock, shown in the figure to the right. The adapter must be inserted all the way into the port, or else the cable will not function, even if the computer on the USB side detects the cable.

Confirm that Jumper 6 has been moved to pins 2 and 3. Refer to "Adjustable Jumper Settings" for details.

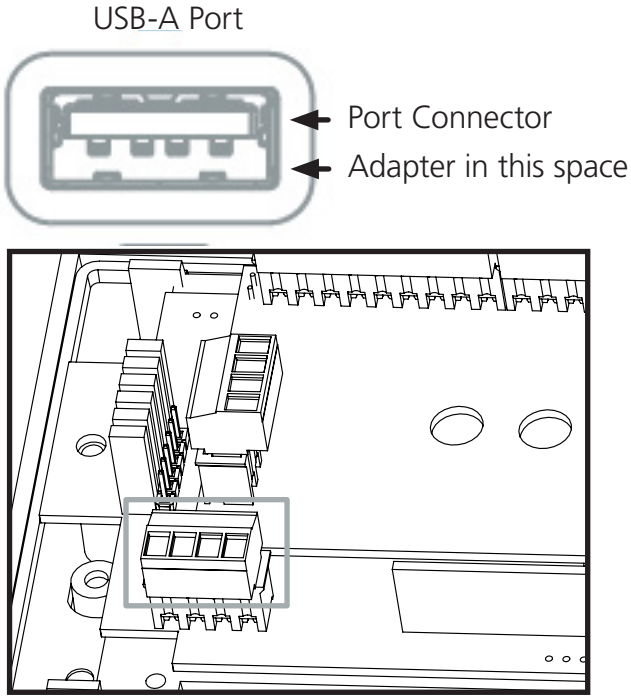

The Sapling Company, Inc.
670 Louis Drive
Warminster, PA 18974
USA

P. (+1) 215.322.6063
F. (+1) 215.322.8498
www.sapling-inc.com

sbdconfig - Setting up sbdconfig.exe

Please Note:

- The sbdconfig.exe software only works with the 3200 or 3300 series digital clocks.
- Sapling's USB to RS485 converter needs to be purchased separately. Other USB to RS485 converters will not work.
- When using the sbdconfig software, ensure JP6 is on Pins 2&3 on the back of the digital clock board.
- 3200/3300 digital clocks shipped before March 27, 2014 require an older version of the sbdconfig software, while digital clocks shipped after March 27, 2014 require a newer version of the sbdconfig software. If your clock does not respond to your version of sbdconfig, you may request both versions of the program by contacting support at +1 (215)-322-6063.

Windows Operating Systems

1. Insert the USB to RS485 converter into a USB connector port. Refer to "sbdconfig - Connecting to the Clock" for details.

Note: If computer does not recognize the USB to RS485 converter after it is plugged in, unplug the converter, rotate it, and plug it back into the USB port.

2. Plug in the USB to RS485 converter into the J7 port on the board, located on the back of the digital clock.
3. Power up the digital clock.
4. Computer will indicate 'Found New Hardware.'
5. It will then display, 'New Hardware Installed.'
6. A. For Windows 7, click on Start menu --> Control Panel --> Hardware and Sound.--> Devices and Printers-->"Device Manager"

6. B. For Windows 8 and 10, right-click on the Start button. From the list that appears, click on "Device Manager".

The Sapling Company, Inc.
670 Louis Drive
Warminster, PA 18974
USA

P. (+1) 215.322.6063
F. (+1) 215.322.8498
www.sapling-inc.com

sbdconfig - Setting up sbdconfig.exe (ctd.)

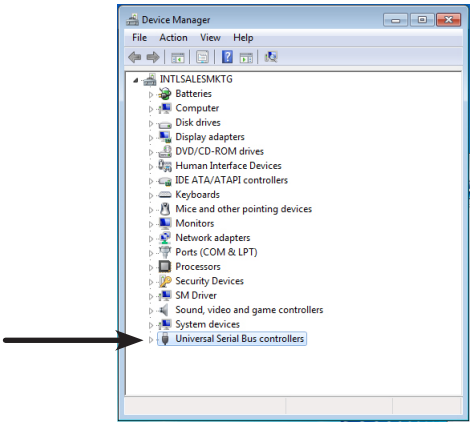

7. Scroll down to Universal Serial Bus controllers and click the + sign to open.

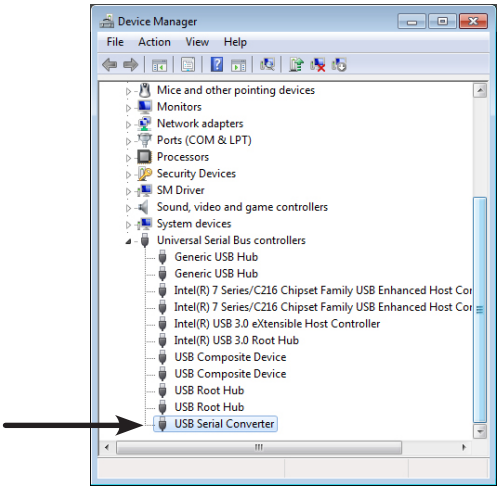

8. Double-click on the "USB Serial Converter" and a new window will open.

If the USB Serial Converter does not appear, look for a new item called USB Half UART under the Device Manager category "Other Devices". Within five minutes, the Device Manager will refresh, the USB Half UART will vanish, and the USB Serial Converter will be listed in the correct category. This will often happen the first time that the cable is being used with a new computer, and rarely happens after that.

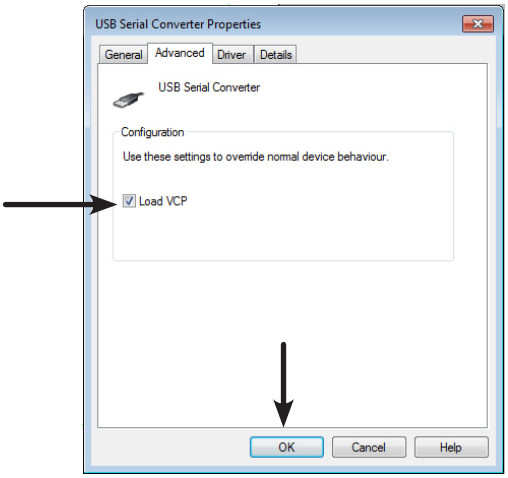

9. Click in the Advanced tab and check the box next to 'Load VCP' and click OK.

The Sapling Company, Inc.
670 Louis Drive
Warminster, PA 18974
USA

P. (+1) 215.322.6063
F. (+1) 215.322.8498
www.sapling-inc.com

sbdconfig - Setting up sbdconfig.exe (ctd.)

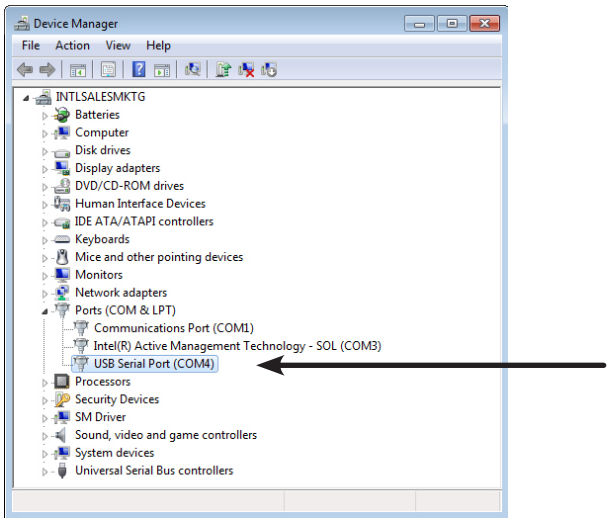

10. Remove RS485 device from the USB port, wait 5 seconds, and plug it back into USB port.

11. Open the Device Manager and scroll to Ports. Make note of which port the USB Serial Port is assigned to. For example: (COM 4).

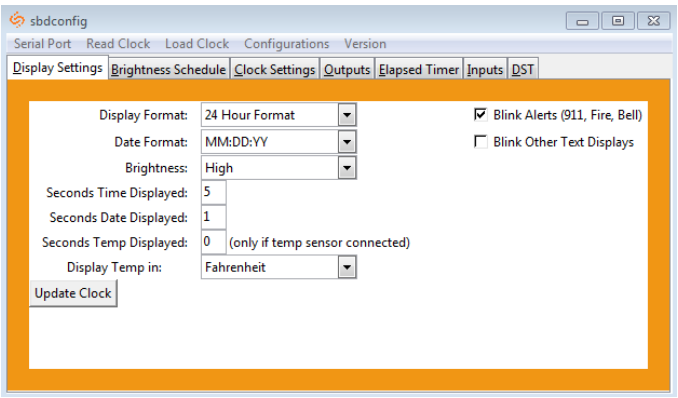

12. Load the sbdconfig.exe software from disk (provided with the digital clock) or copy the software to the desktop.

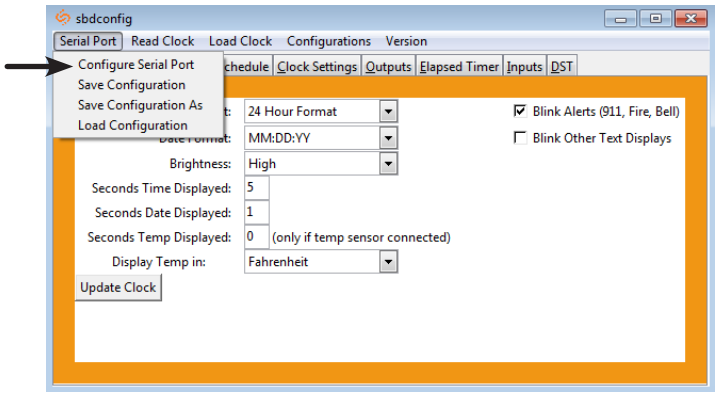

13. Open the sbdconfig software, click on Serial Port (in the menu bar) --> Configure Serial Port. Match the Com port on the sbdconfig software to the USB Serial Port in the Device Manager.

The Sapling Company, Inc.
670 Louis Drive
Warminster, PA 18974
USA

P. (+1) 215.322.6063
F. (+1) 215.322.8498
www.sapling-inc.com

sbdconfig - Setting up sbdconfig.exe (ctd.)

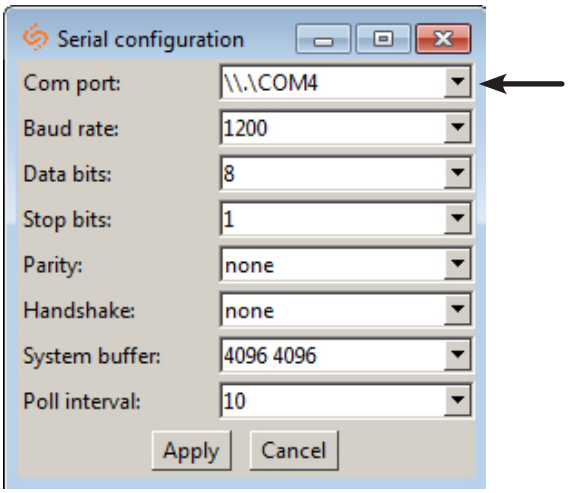

14. Make sure that the Com port number matches the number you saw on the Device Manager, then click apply.

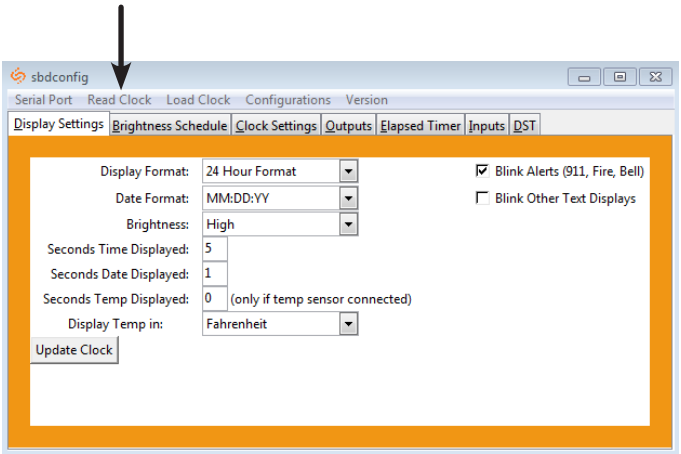

15. Click the 'Read Clock' button. The default settings will populate the tabs on the sbdconfig software. Once the 'Read Clock' button is clicked, another window will open that will signify the upload process.

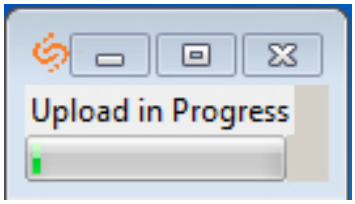

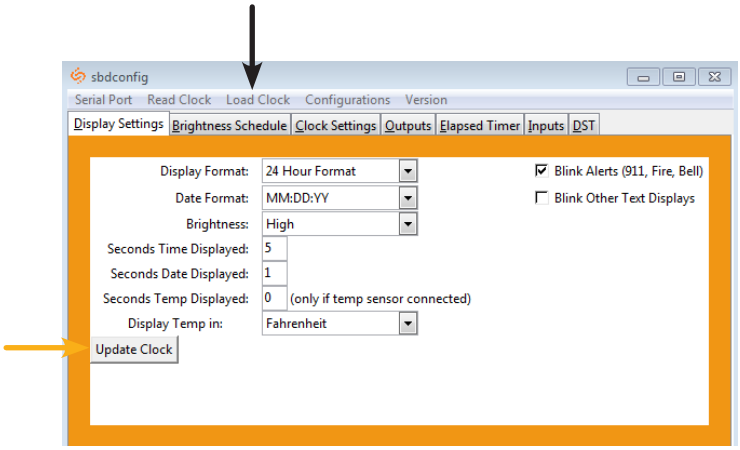

16. You may now edit the clock settings with the sbdconfig program. These settings may be applied to the clock by pressing the update clock button on each tab, or the load clock button in the task bar at the top of the window.

The Sapling Company, Inc.
670 Louis Drive
Warminster, PA 18974
USA

P. (+1) 215.322.6063
F. (+1) 215.322.8498
www.sapling-inc.com

sbdconfig - Task Bar

Located on the task bar of the sbdconfig software, there are five options to choose from: Serial Port, Read Clock, Load Clock, Configurations, and Version.

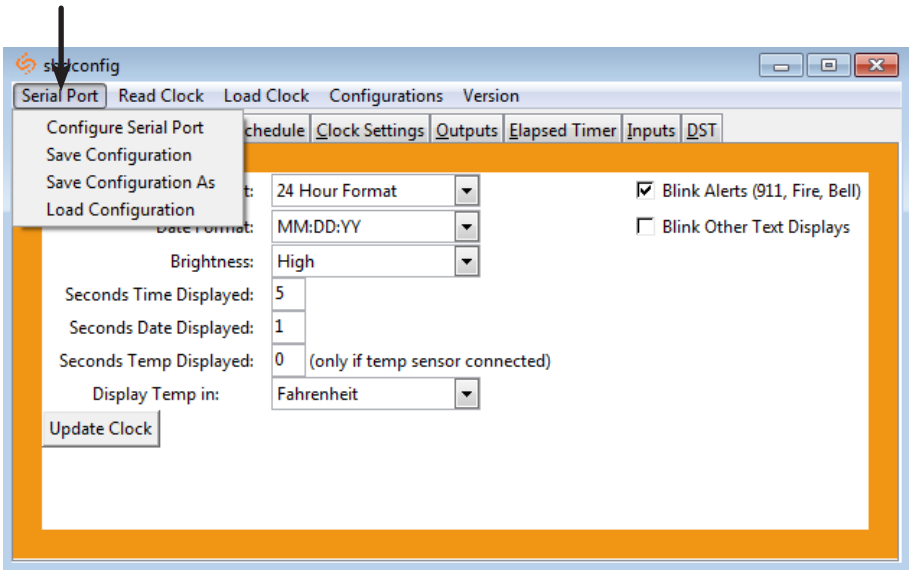

Serial Port

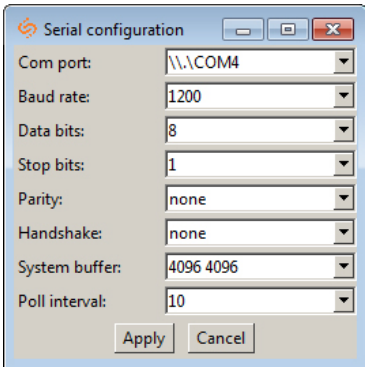

(Fig. 1)

- **Configure Serial Port:** When clicked, this option will open the settings for the serial port (Fig. 1). This is where a user can manage the settings that connect a PC to the digital clock.
- **Save Configuration:** After a user sets the serial port's settings on the sbdconfig software, this option will save a particular configuration to a computer in order to upload it to a different clock.
- **Save Configuration As:** If a user modifies the serial port's settings, this option will save a copy of the reconfigured clock to a computer.
- **Load Configuration:** This option allows a user to upload a previously saved serial port's configuration to the sbdconfig software. Once a digital clock is connected to a computer via the USB to RS485 converter, click the 'Load Configuration' option.

Note: When any of the above options listed under the Serial Port tab are selected, they only apply to the Serial Configuration settings.

The Sapling Company, Inc.
670 Louis Drive
Warminster, PA 18974
USA

P. (+1) 215.322.6063
F. (+1) 215.322.8498
www.sapling-inc.com

sbdconfig - Task Bar (ctd.)

Read Clock

- If a user has a previously configured clock and connects it to a computer, this option will read and upload the settings to the sbdconfig software program. Once the 'Read Clock' button is clicked, another window will open that will signify the upload process (Fig. 2).

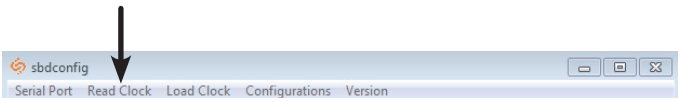

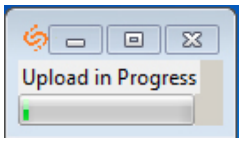

(Fig. 2)

Load Clock

- The 'Load Clock' button will allow a user to change multiple settings within the SBDconfig software tabs. This eliminates the need to click 'Update Clock' on each screen. When the 'Load Clock' button is clicked, another window will open showing that the download is in progress (Fig. 3).

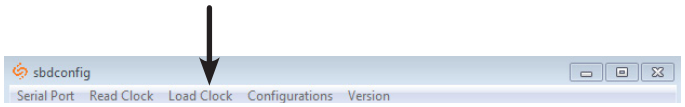

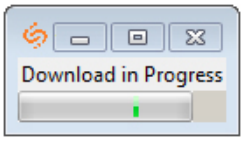

(Fig. 3)

Configurations

- Save Configuration: After the clock's settings are chosen, this option will save the configuration to the computer.
- Load Configuration: This option will allow a user to load the previously saved configuration from the computer.

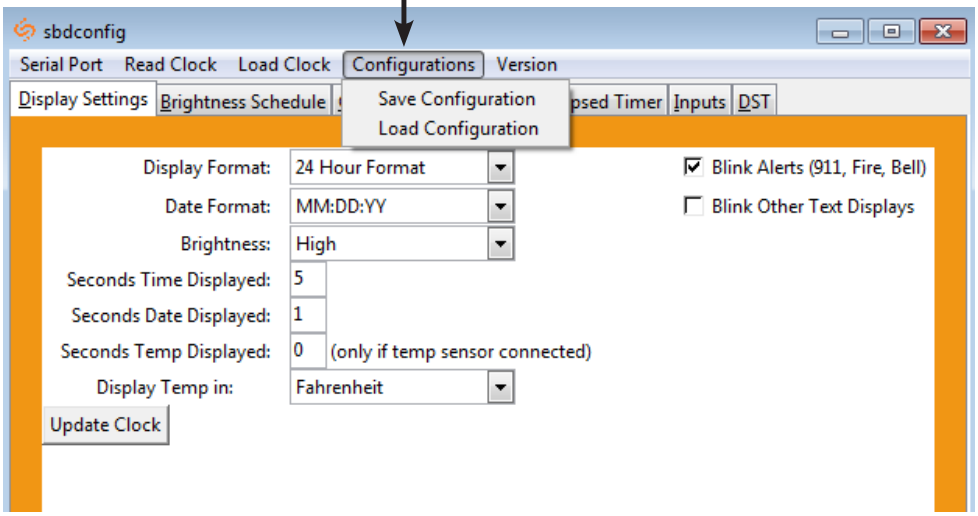

Version

- The Version button displays the number of the software version.

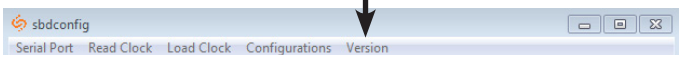

The Sapling Company, Inc.
670 Louis Drive
Warminster, PA 18974
USA

P. (+1) 215.322.6063
F. (+1) 215.322.8498
www.sapling-inc.com

sbdconfig - Display Settings

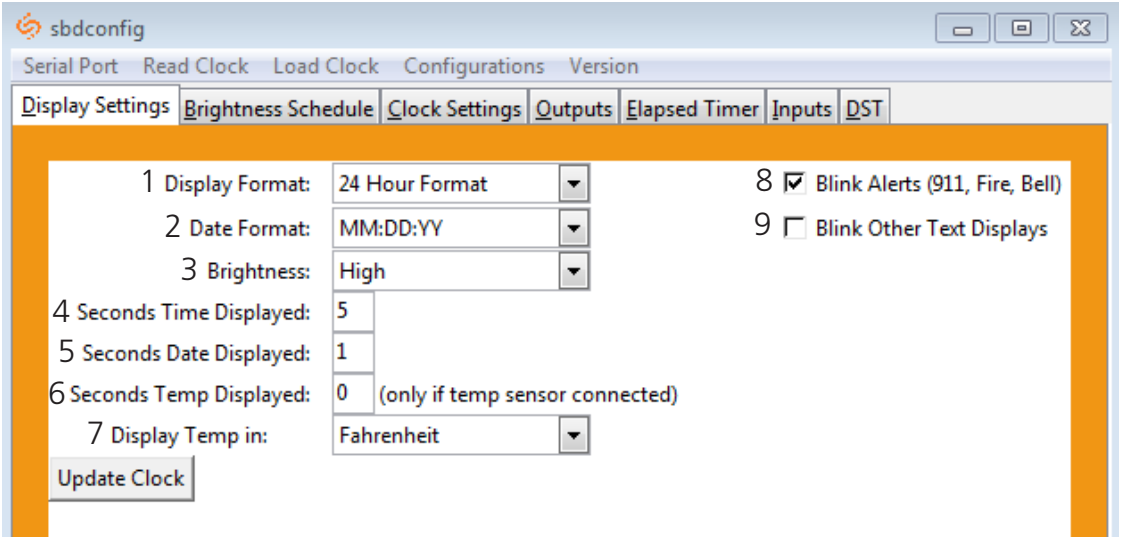

Clicking on the Display Settings tab will allow a user to program the following settings:

1. Display Format - Allows the user to select how the time is displayed on the clock. There are two options: 12 hour format (3:00AM/3:00PM) or 24 hour format (3:00/15:00).
2. Date Format - Sets the date to display in either American style: MM:DD:YY or European style: DD:MM:YY. For 4 digit clocks, the date will display in either American style: MM:DD or European style: DD:MM.
3. Brightness - Sets the brightness level that the clock will display. There are four levels to choose from: High, Medium, Low or Off.
4. Seconds Time Displayed* - The clock will display the time for the number of seconds entered in the box. After the selected amount of time passes, the clock will change to show Date or Temperature. If a time of 0 is selected, the clock will not display the time. If Date and Temp Displayed are set to 0, the clock will only display the time.
5. Seconds Date Displayed* - The clock will display the date for the number of seconds entered in the box. After the selected amount of time passes, the clock will change to show the Time or Temperature. If a time of 0 is selected, the clock will not display the date. If Time and Temp Displayed are set to 0, the clock will only display the date.
6. Seconds Temp Displayed* - If a temperature sensor was installed on the clock, the clock will display the temperature for the number of seconds entered in the box. After the selected amount of time passes, the clock will change to show the Time or Date. If a time of 0 is selected, the clock will not display the temperature. If Time and Date Displayed are set to 0, the clock will only display the temperature.
7. Display Temp In - If a temperature sensor was installed on the clock, this option allows a user to select whether the temperature appears in Fahrenheit or Celsius.
8. Blink Alerts (911, Fire, Bell) - When checked, this option will enable the emergency alert messages programmed with the master clock to blink when activated (see the specific master clock user manual for more information). Leaving the message unchecked will result in the message being sent in text that does not blink.
9. Blink Other Text Displays - When checked, this option will enable any other messages programmed with the master clock to blink when activated (see the specific master clock user manual for more information). Leaving the message unchecked will result in the message being sent in text that does not blink.

Once all of the Display Settings are chosen, click the 'Update Clock' button to store the selected options or, when all the tabs have been programmed, click the 'Load Clock' button located on the menu bar to store all options.

***Note:** If the Time, Date, and Temp Displayed are ALL set to 0, the display will turn completely blank. Will turn on for count down/up, and off again once the counting has been cleared.

The Sapling Company, Inc.
670 Louis Drive
Warminster, PA 18974
USA

P. (+1) 215.322.6063
F. (+1) 215.322.8498
www.sapling-inc.com

sbdconfig - Brightness Schedule

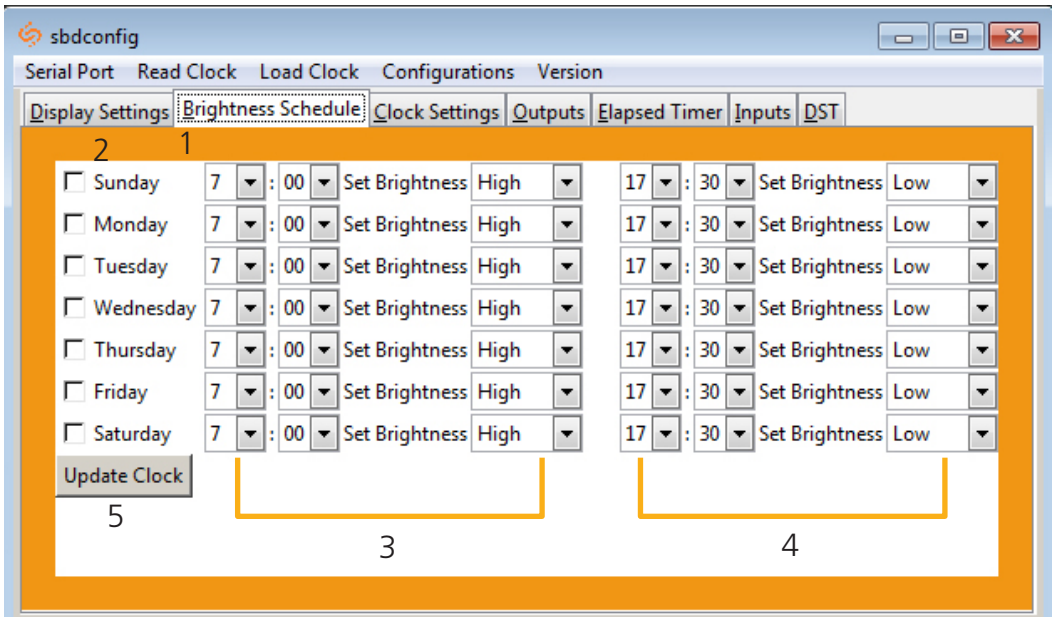

1. Clicking on the Brightness Schedule tab allows a user to establish a Brightness Schedule for the digital clock(s).
2. Date Column - Allows the user to select dates where changes to the brightness schedule are active. If a date is not selected, the actions in the adjustment columns will not be applied to the clock.
3. Adjustment 1 - Allows the user to select a new brightness level for the clock, and the time when the new brightness level will take effect. Times are entered in 24 hour mode. Brightness options are High, Medium, Low, and Off.
4. Adjustment 2 - Allows the user to set a second time during a given day where the brightness level will change.

   The time for Adjustment 2 may be set for any time before or after Adjustment 1 during the same day. For example, if Adjustment 1 is set to activate at 11:00 AM and Adjustment 2 is set to activate at 8:00 AM, Adjustment 2 will activate first at 8 AM, followed by Adjustment 1 at 11 AM.

   If you wish for the brightness to only change once on a given day, set Adjustment 1 and Adjustment 2 to the same brightness level and time.
5. Once the Brightness Schedule has been programmed, click the 'Update Clock' button to store the selected options or, when all the tabs have been programmed, click the 'Load Clock' button located on the menu bar to store all options.

The Sapling Company, Inc.
670 Louis Drive
Warminster, PA 18974
USA

P. (+1) 215.322.6063
F. (+1) 215.322.8498
www.sapling-inc.com

sbdconfig - Clock Settings

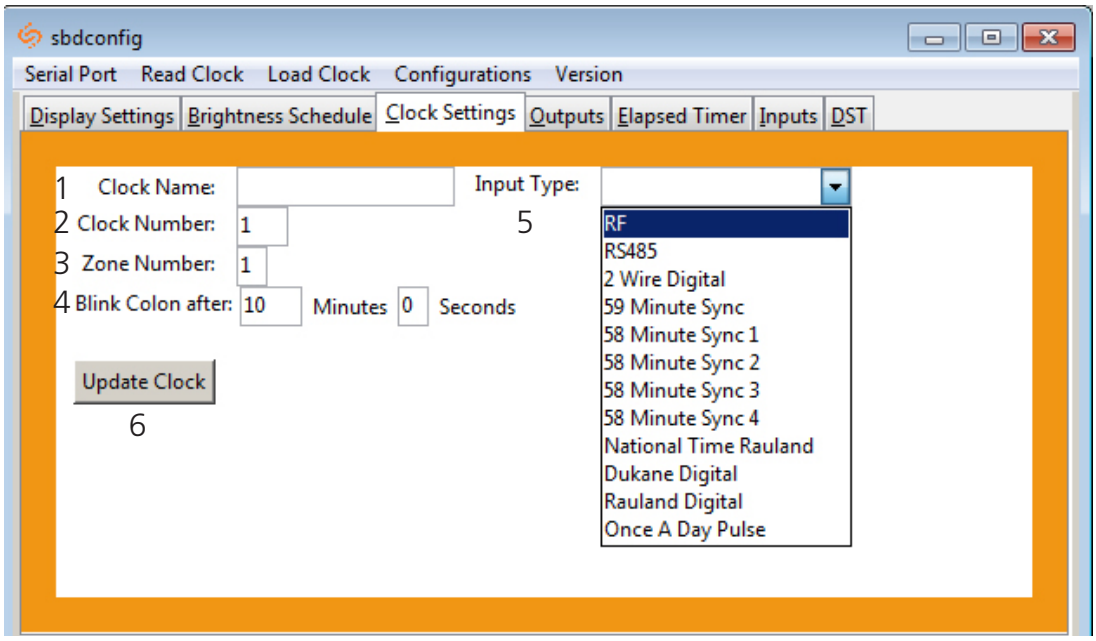

Clicking on the Clock Settings tab will allow a user to program the following settings:

1. Clock Name - This field allows a user to assign the clock a unique name, such as its location in a facility. The name cannot exceed 24 characters.
2. Clock Number - This field allows a user to assign a unique number to a clock. This number is used when commanding a specific digital clock from the Master Clock Web Interface. Please refer to the master clock manual associated with your system for more information.
3. Zone - This field allows a user to enter a number (1-99) for the clock's zone. A zone is a collection or grouping of clocks within a certain section of a facility. This number is used when commanding a designated group of digital clocks from the master Clock Web Interface. Please refer to the master clock manual associated with your system for more information.
4. Blink Colon After - The colon on the digital clock display has the ability to blink in order to signify a loss of communication with the master clock. These fields will let the user choose how long after a loss of communication the clock will wait before the colon starts to blink.
5. Input Type - Selecting an item from this drop-down menu allows the user to select a primary input source for accepting new time data. **A wireless clock should have RF set as its input.**
6. Once all of the Clock Settings are chosen, click the 'Update Clock' button to store the selected options or, when all the tabs have been programmed, click the 'Load Clock' button located on the menu bar to store all options.

The Sapling Company, Inc.
670 Louis Drive
Warminster, PA 18974
USA

P. (+1) 215.322.6063
F. (+1) 215.322.8498
www.sapling-inc.com

sbdconfig - Outputs

Clicking on the Outputs tab will allow a user to program the following settings:

RS485 Data Rate: This option determines how often data (time and date) is sent to the clock(s) or other Sapling devices, such as Wireless Repeaters, Converter Boxes, or other Master Clocks.

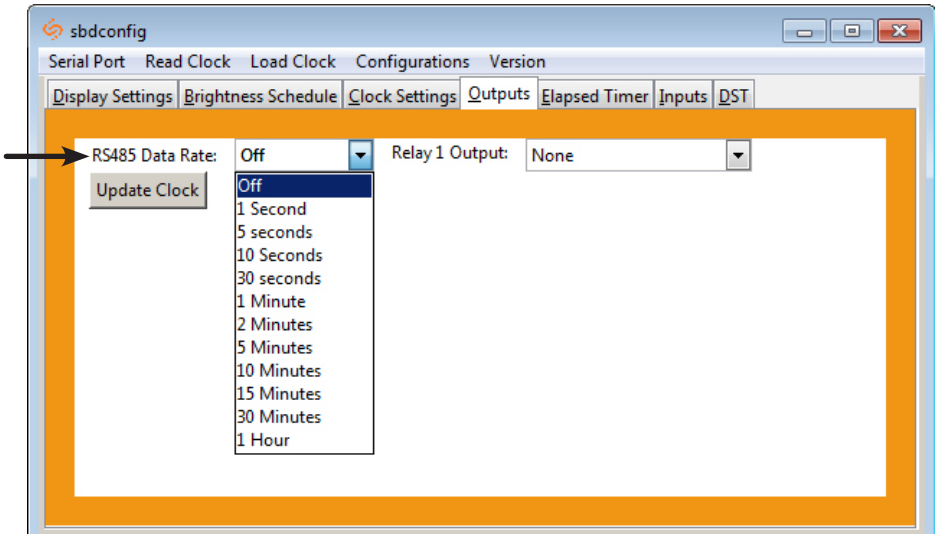

Relay 1 Output: This option allows a user to choose the time sync the clock uses to correct other time keeping devices, such as paging systems, an existing master clock, or other devices manufactured by different companies. Refer to "Output-Relays" for wiring information and "Manual Controls" setting 20 for an explanation of each output type.

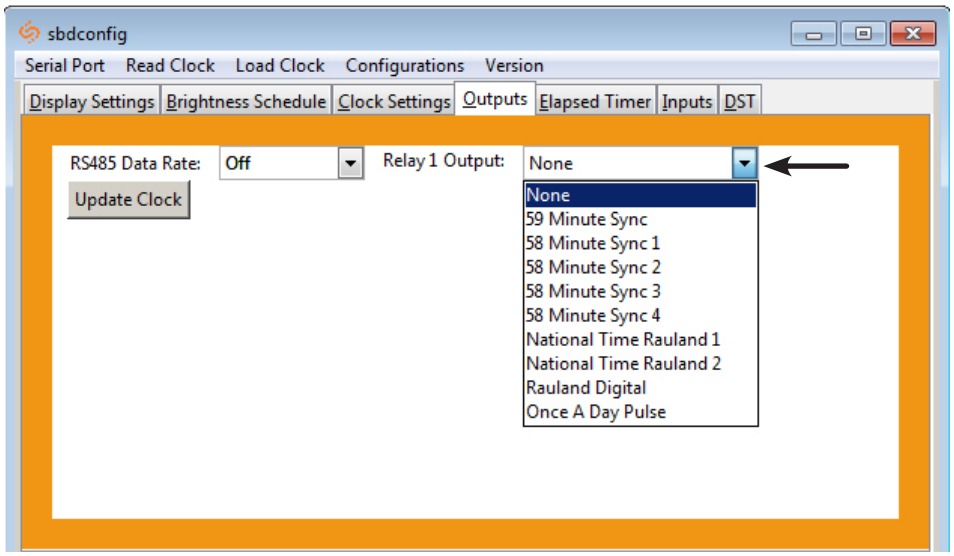

Once the Relay 1 Output settings are chosen, click the 'Update Clock' button to store the selected options or, when all the tabs have been programmed, click the 'Load Clock' button located on the menu bar to store all options.

The Sapling Company, Inc.
670 Louis Drive
Warminster, PA 18974
USA

P. (+1) 215.322.6063
F. (+1) 215.322.8498
www.sapling-inc.com

sbdconfig - Elapsed Timer

A user may set up and configure the Elapsed Timer control panel through sbdconfig. For detailed instructions on the many functions and uses of the Elapsed Timer, refer to the Elapsed Timer Manual.

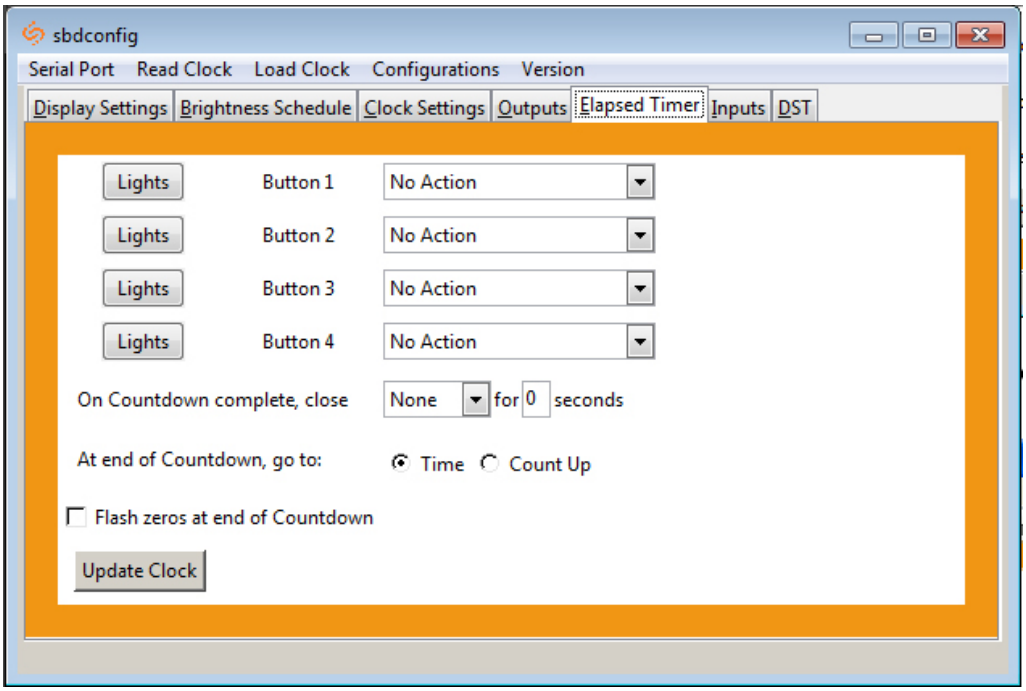

The Sapling Company, Inc.
670 Louis Drive
Warminster, PA 18974
USA

P. (+1) 215.322.6063
F. (+1) 215.322.8498
www.sapling-inc.com

sbdconfig - Inputs

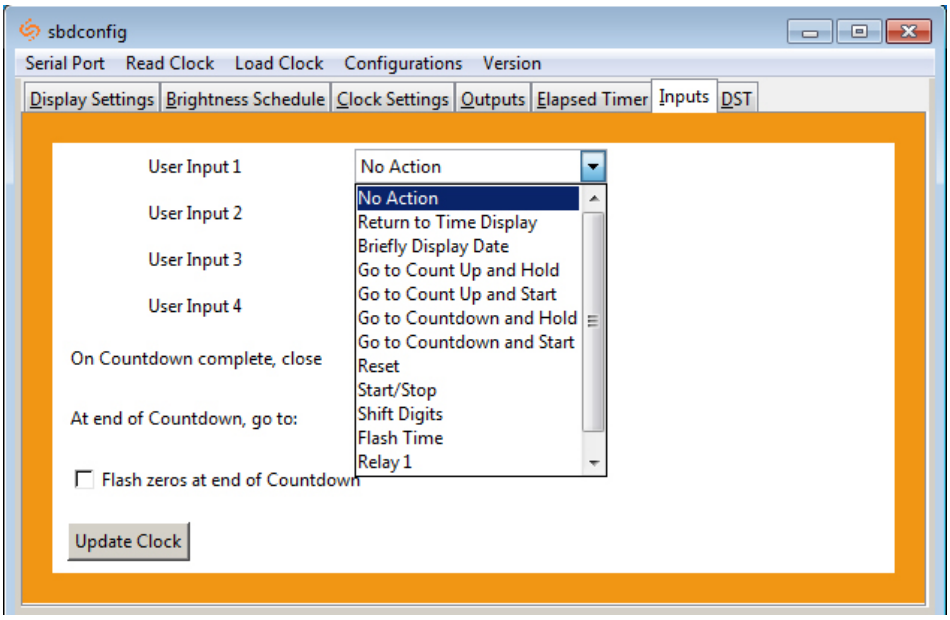

The 'Inputs' tab allows a user to program the clock to perform a certain function through a switch or relay contact closure from an outside device such as Code Blue, Nurses Call, etc. Program the first Input on the 3300 digital clock by selecting one of the options in the drop down list next to Input 1. Listed below are the options and the function of each one:

No Action - This function does nothing if the input is activated.

Return to Time Display - Activating the input causes the clock to display the time. If a countdown or count up is in progress, the function is reset when the input is activated.

Briefly Display Date - Activating the input causes the clock to briefly display the date. This only works if the clock is displaying the time, not a countdown.

Go to Count Up and Hold - Activating the input causes the clock to display and hold at zero.

Go to Count Up and Start - Activating the input causes the clock to switch from its current display and begin a count up from zero.

Go to Count Down and Hold - Activating the input causes the clock to display and hold at a start time specified by the user.

Go to Count Down and Start - Activating the input causes the clock display to begin counting down from a time specified by the user.

Reset - Activating the input restarts whichever countdown/count up is in progress.

Start/Stop - Activating the input causes the timer to pause or resume its counting functions.

Shift Digits - Activating the input causes the digits to shift from displaying Hour/Minutes to Minutes/Seconds (Applies to 4 digit clocks only).

Flash Time - Activating the input causes the clock to briefly display the time while another function, such as count up or count down, is occurring. Activating the input does not pause, stop, or reset whichever function is occurring at the same time.

Relay 1 - Activating the input causes Output Relay 1 to activate.

Relay 2 - Activating the input causes Output Relay 2 to activate.

Code Blue - Performs a special-purpose count up. Refer to the section on the next page labeled "Code Blue"

The Sapling Company, Inc.
670 Louis Drive
Warminster, PA 18974
USA

P. (+1) 215.322.6063
F. (+1) 215.322.8498
www.sapling-inc.com

sbdconfig - Inputs (ctd.)

Code Blue:

Code Blue is a special-purpose count up designed for use in hospitals and other medical facilities. This function overrides the control panel LED settings. The lights are green while the timer is running and red when the timer has been paused.

When an input programmed with Code Blue is activated for the first time, the count up starts.

When the input is activated a second time, the count up pauses. If the input is activated a third time, the count up will resume.

When the input is activated for a period longer than three seconds, the count up resets to zero and the display goes back to showing the time.

If a button programmed with the Start/Stop function is pressed while Code Blue is running, the count up will pause. If Start/Stop is pressed again, the count up will resume.

On countdown complete, close: This option allows a user to choose how many seconds a relay will be closed for.

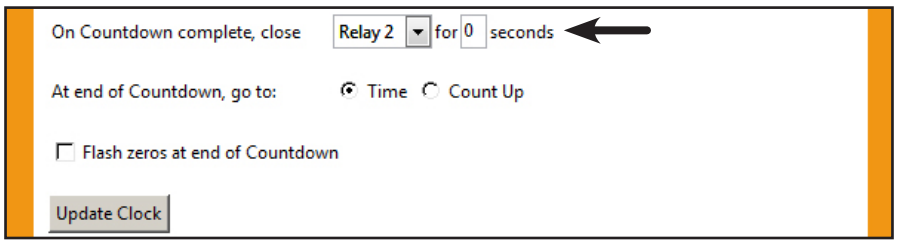

At end of Countdown, go to: This option allows a user to choose between having the clock display the time or start a count up when a countdown completes.

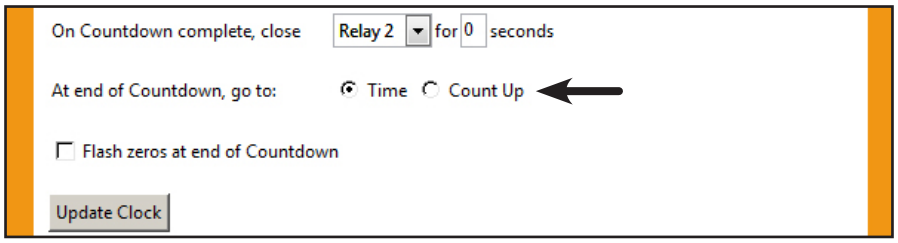

Once all of the Input settings are chosen, click the 'Update Clock' button to store the selected options or, when all the tabs have been programmed, click the 'Load Clock' button located on the menu bar to store all options.

The Sapling Company, Inc.
670 Louis Drive
Warminster, PA 18974
USA

P. (+1) 215.322.6063
F. (+1) 215.322.8498
www.sapling-inc.com

sbdconfig - Daylight Saving Time (DST)

The DST Tab allows a user to configure the clock for automatic Daylight Saving Time changes.

Select Method for Defining DST: This drop down allows a user to choose between four options for Daylight Savings Time.

Day of Month: When this option is selected, Daylight Saving Time can be set based on what date and time it begins and ends. For example, Daylight Saving Time can begin on March 28 at 2AM and end on November 1st at 2AM. (Fig. 1.)

Fig. 1

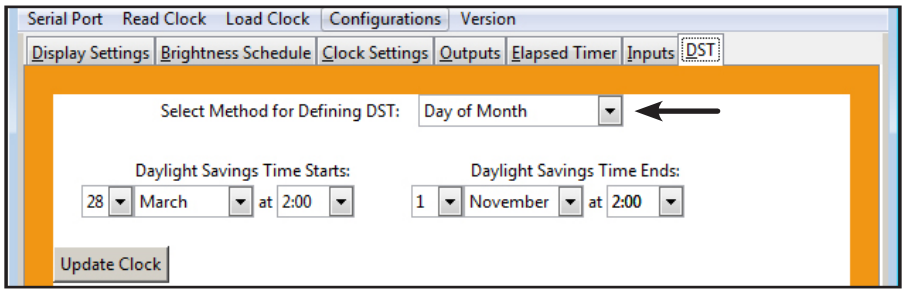

Day of Week in Month: When this option is selected, Daylight Saving Time can be set based on what week in what month and what time it begins and ends. For example, Daylight Saving Time can begin on the second Sunday in March at 2AM and ends on the first Sunday in November at 2AM. (Fig. 2)

Fig. 2

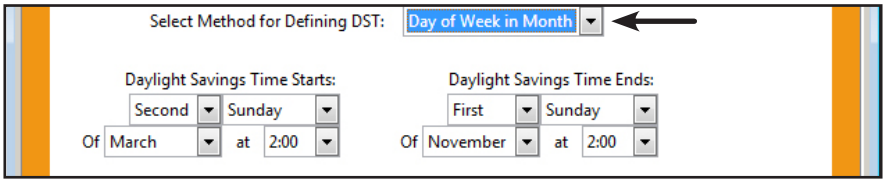

By Country: When this option is selected, Daylight Saving Time can be chosen by country. For example, Daylight Saving Time can be selected to follow the DST rules established in the United States. (Fig. 3)

Fig. 3

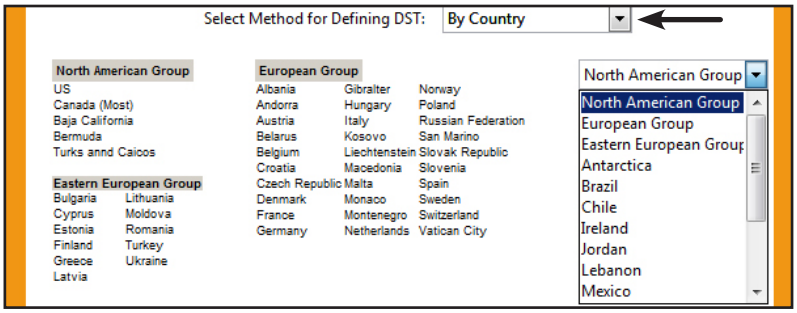

None: When this option is selected, Daylight Saving Time is not applied. (Fig. 4)

Fig. 4

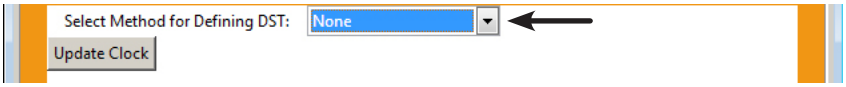

Once all of the DST settings are chosen, click the 'Update Clock' button to store the selected options or, when all the tabs have been programmed, click the 'Load Clock' button located on the menu bar to store all options.

The Sapling Company, Inc.
670 Louis Drive
Warminster, PA 18974
USA

P. (+1) 215.322.6063
F. (+1) 215.322.8498
www.sapling-inc.com

Reading the Display

The digital clock is designed to display time in either a 12-hour or 24-hour format. When the display is set to the 12-hour format, a circular light will appear in the top left corner of the display to indicate PM, or disappear to indicate AM. When the display is set to the 24 hour format, the full 24-hour time will appear on the display; no other lights should appear.

Some examples:

5:30 AM (12-hour format)

5:30 PM (12-hour format)

5:30 AM (24-hour format)

5:30 PM (24-hour format)

The factory default setting for all digital clocks is the 12-hour format. If you wish to set the clock to display time in a 24-hour format, see the section labeled “Jumper Settings” or “sbdconfig - Display Settings”, included earlier in this manual.

The Sapling Company, Inc.
670 Louis Drive
Warminster, PA 18974
USA

P. (+1) 215.322.6063
F. (+1) 215.322.8498
www.sapling-inc.com

Frequently Asked Questions

Can this digital clock be used as a standalone clock?

The 3300 digital clock can be used as a standalone clock, but it will not keep synchronized time in this configuration. Instead, it will rely on an internal quartz oscillator for keeping the time. The clock will drift by a few seconds each year while in this mode, and will need to be readjusted manually.

How can I use this digital clock with Rauland, Dukane and other systems?

3300 clocks can be added directly to several sync wire systems. Refer to the Inputs section of this manual for instructions on how to connect the clock to each system type.

3200 and 3100 clocks can obtain time from these systems through a master clock working as a translator. Data from the other system would be sent to the master clock, and then the master clock would send the data to the digital clocks through 2-wire, RS485, or wireless communication protocols.

What happens to the digital clock if a power failure occurs?

If a power failure occurs, the display will shut off but the clock will continue to keep time with its internal quartz oscillator. This oscillator will continue to run on a tiny battery backup for about ten years. In this mode, it may drift from synchronized time by a few seconds for each year that the clock is without power. Once power is restored to the clock, the display will turn on and display the time on the quartz oscillator. It will correct this to accurate, synchronized time once a signal from a master clock is received.

What happens to the digital clock if contact with the time data source is lost?

The digital clock will rely on an internal quartz oscillator for keeping the time until time data is received. The clock will drift by a few seconds each year while in this mode, and will need to be readjusted manually.

The 3300 digital clock is able to act as a master clock. If the communication input is lost to the 3300, and the 3300 is acting as a master, then the clock will send synchronization data to any clocks down the line that are connected. This data will be based off of the 3300's quartz oscillator, so while the clocks will be synchronized to each other, they may not be showing accurate time. Colons will blink if the clock has not recieved a signal after a set amount of time.

How do I take advantage of the 3200/3300 chronograph functions?

The Chronograph functions can be engaged through Sapling's Elapsed Timer (part# SBD-ELT-001-0), or by using a dry contact closure with the configurable user inputs (3300 only). Refer to the respective selections of this manual for setup instructions.

How can I display "BELL" and "FirE" on the clock?

"FirE" and "BELL" are signals sent by the appropriate master clock. Refer to the master clock manual for instructions.

For 24V clocks, what happens if voltage on the power line drops from 24VAC to lower voltage?

The clock will still function, and will maintain the same level of brightness. However, the current consumption will increase proportionally to the decrease in voltage. Very low voltage will cause the display to turn off.

The Sapling Company, Inc.
670 Louis Drive
Warminster, PA 18974
USA

P. (+1) 215.322.6063
F. (+1) 215.322.8498
www.sapling-inc.com

Frequently Asked Questions

Will the wireless clock cause interference with other wireless devices?

No. SBL Series Wireless Clocks work on 900 MHz (2.4GHz for SBTG) frequency-hopping technology, which allows the clock transmitters to avoid interfering with other devices operating on those frequencies.

Do I gain any advantages by having more than one transceiver on a locally-powered wireless clock system?

Additional transceivers are only useful if you must mount a clock beyond the range of all other wireless clocks. If all the clocks in the system are in range of each other, then there are no additional benefits from having more than one primary transceiver.

How long does it take for a clock to receive a signal?

If everything is installed correctly and the transponder is open, the clock should get the signal within five minutes. If the user wants to manually cause the clock to do this, please refer to "Manually setting a connection between two or more SBLs" under the section "Synchronization system setup". Once the clock has been synchronized, it will attempt to acquire a time signal once every minute.

Whether or not a clock actually receives a signal is dependent on the settings of the signal source. For instance, a receiver on a locally-powered digital clock that uses a battery-powered analog clock on economy mode as a signal source will only receive time data when the signal source transmits it—once every four hours—even though the receiver on the digital clock listens for a signal once every minute.

When I power my clock, it seems to be running a test instead of showing the time. What is it doing?

Immediately after power up an SBL/SBLG will run an LED display test to allow the user to confirm that each segment of the display is functioning properly.

The Sapling Company, Inc.
670 Louis Drive
Warminster, PA 18974
USA

P. (+1) 215.322.6063
F. (+1) 215.322.8498
www.sapling-inc.com

Troubleshooting

How can I determine that the clock is receiving a signal?

if the clock is not receiving a signal, then the colons on the clock will blink on and off, unless configured by the user not to do so. This option is controlled through either the Manual Controls; Setting 13.

The clock is not running. What do I do?

1. Measure the input voltage to the clock. The voltage should match one of the corresponding ranges below, depending on the digit size and power source:

	2.5" Digit size	**4.0" Digit size**
24V	11-28 V	16-28 V
110VAC	85-130 VAC	100-130 VAC
230VAC	180-260 VAC	200-260 VAC

2. Make sure that the transformer is an isolated transformer if using a 24VAC model.
3. Make sure the ground wire is not touching other wires.

NOTE: If you fail to follow instructions 2 and 3 listed above, the fuses can be blown.

The clock is in a location with a poor signal. What should I do?

Install a repeater or a locally-powered clock nearby.

The clock is in a location with no signal or a weak signal. What should I do?

If the clock is in a location that isn't receiving signal, or is not receiving a strong-enough signal to synchronize, install a signal repeater or add more secondary clocks in a location between clocks that are receiving the signal and clocks that are not.

The clock is not receiving a communication signal from the master clock, despite the fact that other nearby clocks are receiving a signal. What should I do?

Measure the voltage of the clock, as a low-voltage clock may not pick up master clock signals. Refer to the table above as a reference for the expected input voltage range for each clock type.

My version of the sbdconfig.exe software is not working with my clocks. What should I do?

3200/3300 clocks shipped before March 27, 2014 require an older version of the sbdconfig software, while 3200/3300 clocks shipped after March 27, 2014 require a newer version of the sbdconfig software. If your clock does not respond to your version of sbdconfig, you may request both versions of the program by contacting support at +1 (215)-322-6063.

The Sapling Company, Inc.
670 Louis Drive
Warminster, PA 18974
USA

P. (+1) 215.322.6063
F. (+1) 215.322.8498
www.sapling-inc.com

Warranty

Sapling Limited Warranty and Disclaimer

The Sapling Company, Inc. warrants only that at the time of delivery and for a period of 24 calendar months after delivery or the period stated in this invoice, if different, the Goods shall be free of defects in workmanship and materials, PROVIDED that this warranty shall not apply:

To damage caused by Buyer's or any third party's act, default or misuse of the Goods or by failure to follow any instructions supplied with the Goods.

Where the Goods have been used in connection with or incorporated into equipment or materials the specification of which has not been approved in writing by The Sapling Company, Inc.;

To Goods which are altered, modified or repaired in any place other than a Sapling Company, Inc. factory or by persons not expressly authorized or approved in writing by The Sapling Company, Inc.

THE FOREGOING WARRANTY IS EXCLUSIVE AND IN LIEU OF ALL OTHER WARRANTIES WITH RESPECT TO GOODS DELIVERED UNDER THIS CONTRACT, WHETHER EXPRESS OR IMPLIED, INCLUDING WITHOUT LIMITATION, ANY IMPLIED WARRANTY OF MERCHANTABILITY OR FITNESS FOR A PARTICULAR PURPOSE. The foregoing warranty runs only to Buyer. There are no oral or written promises, representations or warranties collateral to or affecting this contract. Representatives of The Sapling Company, Inc. may have made oral statements about products described in this contract. Such statements do not constitute warranties, shall not be relied on by Buyer and are not part of the contract.

Note: An extended 5 year (60 month) warranty is also available at the time of the system purchase with a surcharge.

The Sapling Company, Inc.
670 Louis Drive
Warminster, PA 18974
USA

P. (+1) 215.322.6063
F. (+1) 215.322.8498
www.sapling-inc.com

FCC Statements

The Federal Communications Commission (FCC) wants you to know:

This equipment has been tested and found to comply with the limits for a Class B digital device, pursuant to Part 15 of the FCC rules. These limits are designed to provide reasonable protraction against harmful interference in a commercial installation. This equipment generates, uses, and can radiate radio frequency energy and, if not installed and used in accordance with the instructions, may cause harmful interference to radio communications. However, there is no guarantee that interference will not occur in a particular installation. If this equipment does cause harmful interference to radio or television reception, which can be determined by turning the equipment off and on, the user is encouraged to try to correct the interference by one or more of the following measures:

- Reorient or relocate the receiving antenna.
- Increase the separation between the equipment and receiver.
- Connect the equipment to an outlet on a circuit different from which the receiver is connected.
- Consult the dealer or an experienced radio/TV technician.

FCC Warnings:

Changes or modifications not expressly approved by the manufacturer could void the user authority to operate the equipment under FCC Rules.

For the 900 MHz Model:

This equipment must be installed by professional installers only. For precautionary measures, the FCC requires a minimum distance of 20 cm from the unit to constant human physical exposure. The antenna has a maximum gain of 5.14 dB.

For the 2.4 GHz Model:

The antenna(s) used for this transmitter must be installed to provide a separation distance of at least 5.78 cm from all persons and must not be co-located or operating in conjunction with any other antenna or transmitter.

900 MHz FCC ID Number: R73MOD-900-1

2.4 GHz FCC ID Number: R73MOD-24G-1