USER MANUAL

MINI 100
MIDI 200

The picture shows a Midi 200 system.
(Wireless remote control and battery cables are optional.)

Rev: 2

CE0470

FCC ID: R78-ECU-01
R78-RC-01

ENGBO AS – *a company in the Engbo Group*

OFFICE: Wirgenes vei 7, N-3159 Barkåker **POSTAL ADDR.**: P.O. Box 2288 Postterminalen, N-3103 Tønsberg
E-MAIL: support@engbo.no **WEB**: www.engbo.no **TEL.**: +47 33 00 31 50 **FAX**: +47 33 00 31 60

TABLE OF CONTENTS

INTRODUCTION ***3***

Brief description of the winches 3

Dimensioned drawings 3

TECHNICAL DATA ***4***

WIRING ***5***

Connection of switch panel 5

Connection of end stop sensor 5

Connection of motor leads and battery cables 6

Battery connection 6

Wiring diagram 7

INSTALLATION INSTRUCTIONS ***8***

General 8

Use of anchor bracket 8

Stern penetrations 8

Fixed anchor bracket or hinged anchor bracket 8

Cover with rollers for hole 8

INSTALLATION EXAMPLES ***9***

OPERATING INSTRUCTIONS ***10***

General 10

Dropping anchor 11

Hauling in 11

Automatic end stop 11

Forced operation 11

Installation of end stop wires 12

WIRELESS REMOTE CONTROL ***14***

Operating instructions 14

Dropping anchor 14

Hauling in 15

Forced operation 15

Battery replacement 15

Retrofit 16

Coding the unit 17

MAINTENANCE ***18***

Winter storage 18

Adjustment of end stop device 18

Adjustment of the rope roller guide 18

TROUBLESHOOTING – MINI 100/MIDI 200 ..... ***19***

FCC Statements ***20***

OFFICE: Wirgenes vei 7, N-3159 Barkåker **POSTAL ADDR.**: P.O. Box 2288 Postterminalen, N-3103 Tønsberg
E-MAIL: support@engbo.no **WEB**: www.engbo.no **TEL.**: +47 33 00 31 50 **FAX**: +47 33 00 31 60

INTRODUCTION

Congratulations on your new winch and thank you for choosing an Engbo product. We hope your winch will meet your expectations. Please note that this requires that the winch be installed and used in accordance with this manual in an environment with the correct conditions for proper operation. This includes the necessary battery capacity for the winch motor as well as correct placement of winch, rope, anchor and anchor bracket.

Brief description of the winches

Engbo **MINI 100** is designed for boats up to approximately 20 feet and Engbo **MIDI 200** for boats between 20 to 25 feet. These winches are true free-fall winches and equipped with a new **power electronics** that replaces the traditional contactor. The new electronics have no open contacts and are very flexible as regards voltage. Engbo **MINI 100** and **MIDI 200** are also equipped with new **control electronics** with an **integrated radio receiver** for the wireless remote control as well as an integrated protection of the winch motor and electronics.

The winches are supplied with control panel as standard. A wireless remote control with a range of > 30 m under normal conditions can optionally be used.

Dimensioned drawings

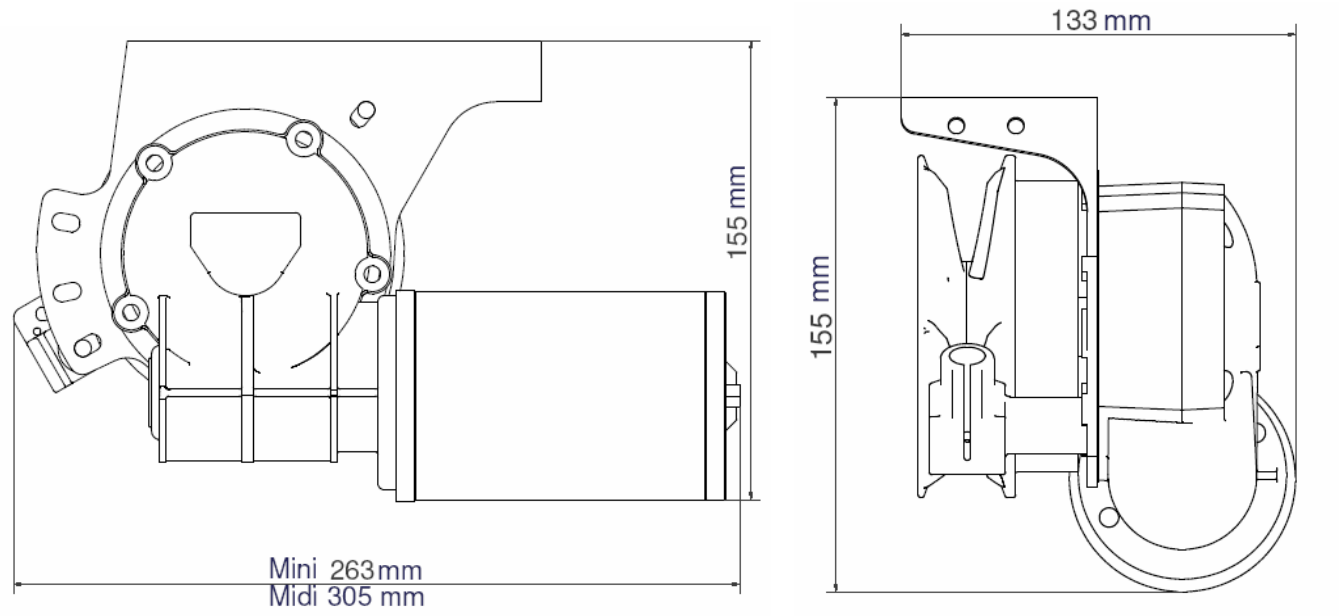

OFFICE: Wirgenes vei 7, N-3159 Barkåker **POSTAL ADDR.**: P.O. Box 2288 Postterminalen, N-3103 Tønsberg
E-MAIL: support@engbo.no **WEB**: www.engbo.no **TEL.**: +47 33 00 31 50 **FAX**: +47 33 00 31 60

TECHNICAL DATA

	ENGBO – MINI 100	ENGBO – MIDI 200
Motor power nom.	12 V DC/350 W	12 V DC/600 W
Rope	Braided leaded rope: Dia 12 mm, 30 m Weight:7,2 kg Breaking load: 1200 daN	Braided lead rope diameter 12 mm, 30/50 m Weight: 7.2 kg/12 kg Breaking load: 1600 daN
Maximum pull	Up to 100 kg (Electronic limit)	Up to 200 kg (Electronic limit)
Haulage speed	15-35 m/min approx. 20 m/min with 20 kg load	15-30 m/min approx. 20 m/min with 30 kg load
Current draw	10-150 A approx. 50 A with 20 kg load	10-200 A approx. 40 A with 30 kg load
Standby current consumtion	‹ 0.3 A at 12 V	‹ 0.3 A at 12 V
Recommended fuse	100 A	150 A
Recommended min. battery capacity	12 V/75 Ah	12 V/75 Ah
Weight: Winch with motor leads	5.5 kg	7.7 kg
Weight: Control electronics	2.3 kg	2.3 kg
End stop function	No	Yes
Recommended anchor	5-8 kg Bruce or plate	7.5-16 kg Bruce, plate or Engbo
Recommended vessel size	Max. 6.0 m (20 feet)	Max. 7.6 m (25 feet)
Installation	Vertical, hanging, forward or side (may require additional bracket).	Vertical, hanging, forward or side (may require additional bracket).
Standard equipment	Winch, electronic module, control panel and main switch. Basic installation bolt set.	Winch with end stop device, electronic module, control panel and main switch. Basic installation bolt set.
Optional equipment	Lead rope Anchor (several types available) Anchor bracket (several types) Shackles Wireless remote control Fuse and fuse holder Installation bracket(s) Battery cable	Lead rope Anchor (several types available) Anchor bracket (several types) Shackles Wireless remote control Fuse and fuse holder Installation bracket(s) Battery cable

OFFICE: Wirgenes vei 7, N-3159 Barkåker **POSTAL ADDR.**: P.O. Box 2288 Postterminalen, N-3103 Tønsberg
E-MAIL: support@engbo.no **WEB**: www.engbo.no **TEL.**: +47 33 00 31 50 **FAX**: +47 33 00 31 60

WIRING

The sticker on top of the electronics module also shows the wiring of the unit.
All wiring and connections must be done with the main switch turned off or the battery disconnected.

Control panel for fixed installation.

Watertight (IP 68) control panel for installation exposed to sea spray and sun. Designed to allow installation directly on gently curved surfaces as well (double-sided tape). The enclosed screws may also be used.
An optional adapter plate (part no. 112-10015) can be used for installation in existing 62 x 62 mm hole.
Several panels can be connected in parallel to the same electronics unit.

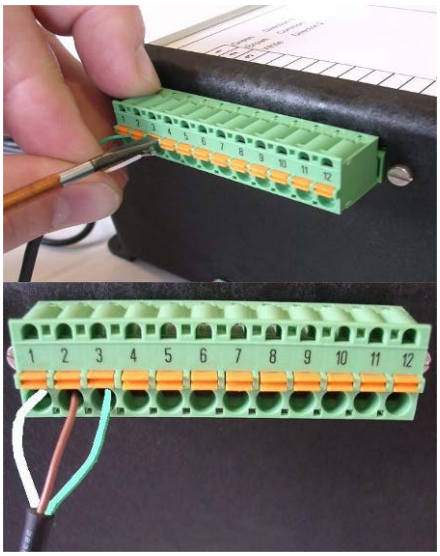

Connection of switch panel

One switch panel is supplied as standard with a 10m cable. The wires are cut and the insulation stripped to the correct length and connected by pushing the wires in while holding down the orange button above the selected hole. Release the button when the wire is in place. Check to make sure that the insulation is not inside the terminal and that there are no loose strands sticking out.
The wires must be connected as follows:
1: White
2: Brown
3: Green
If more than one panel is to be installed, connect the wires in parallel to 1, 2 and 3 (2 is common 0 V)
(Spring-clamp terminal strips are used to avoid the risk of the connections coming loose due to vibration or temperature changes.)

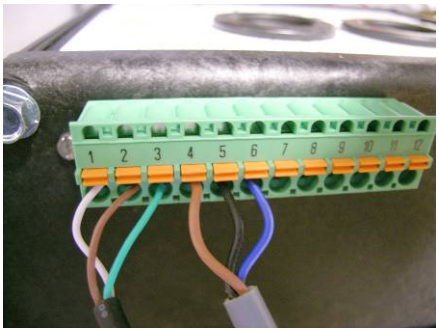

Connection of end stop sensor

(Note: MIDI 200 ONLY)
The wires from the end stop sensor are connected as described above.
The wires must be connected as follows:
4: Brown (BN) = +V
5: Black (BK) = Signal
6: Blue (BU) = Gnd

OFFICE: Wirgenes vei 7, N-3159 Barkåker **POSTAL ADDR.**: P.O. Box 2288 Postterminalen, N-3103 Tønsberg
E-MAIL: support@engbo.no **WEB**: www.engbo.no **TEL.**: +47 33 00 31 50 **FAX**: +47 33 00 31 60

Connection of motor leads and battery cables

The preferred method is to first fit the cables on the unit before installing it standing against the bulkhead with the power cables pointing downward. The motor leads are supplied fitted on the motor. Start by connecting the motor's black negative lead to the left before the battery's black negative cable, then the battery's positive cable and finally the motor's positive lead. (Disassemble in opposite order if necessary.)

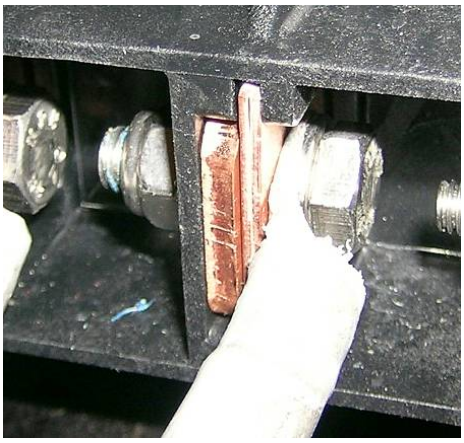

The picture shows the correct connection and orientation of bolts and cables (the lock nuts on the left side).
(The cable terminals must be connected directly to the copper rails without any washers, etc. in between. Use a flat washer between the bolt head and the top of the cable terminal and between the plastic side of the end wall and lock nut.)
The M8 x 25 mm bolt is for the battery's positive conductor.
Note the copper plate used as a spacer in the end wall.
For normal distances from the battery to the electronics module (< 4 m), use 25 mm^2 for MINI 100 and 35 mm^2 for MIDI 200. If the distance is longer, use the next size larger cable dimension.

WARNING !!

Battery connection

- **INCORRECT BATTERY POLARITY WILL PERMANENTLY DESTROY THE POWER ELECTRONICS**
- **<u>BEFORE</u> CONNECTING THE BATTERY - MAKE SURE NO CABLES ARE SHORT-CIRCUITED OR DAMAGED**
- **CHECK ALL POWER CABLES AND TERMINALS; TIGHTEN UP IF NECESSARY**
- **<u>NEVER</u> USE WASHERS <u>BETWEEN</u> CABLE TERMINALS AND TERMINAL POINTS WITH HEAVY CURRENTS.**

The battery's positive cable must have a fuse as close to the battery as possible and the main switch must be installed in an accessible location before the electronics unit.

Windlasses must <u>always</u> be connected to the start battery.

OFFICE: Wirgenes vei 7, N-3159 Barkåker **POSTAL ADDR.**: P.O. Box 2288 Postterminalen, N-3103 Tønsberg
E-MAIL: support@engbo.no **WEB**: www.engbo.no **TEL.**: +47 33 00 31 50 **FAX**: +47 33 00 31 60

Wiring diagram

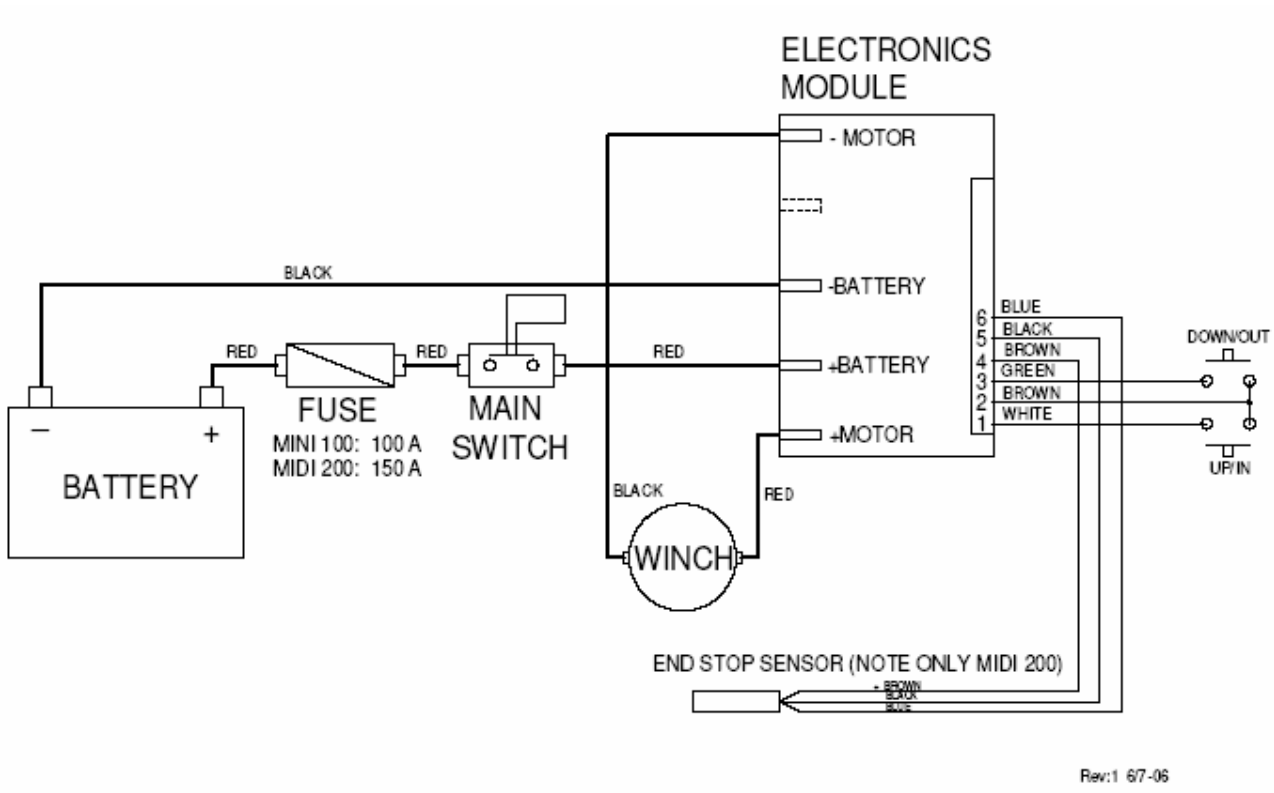

NOTE!

The winch must be connected to the boat's start battery and connected <u>after</u> the boat's main switch.

OFFICE: Wirgenes vei 7, N-3159 Barkåker **POSTAL ADDR.**: P.O. Box 2288 Postterminalen, N-3103 Tønsberg
E-MAIL: support@engbo.no **WEB**: www.engbo.no **TEL.**: +47 33 00 31 50 **FAX**: +47 33 00 31 60

INSTALLATION INSTRUCTIONS

General

Locate the winch as high as possible to allow plenty of room for rope below the winch. The height from lower edge of the gypsy should be at least 40 cm above the bottom of the rope locker or where the rope will be placed. This is to allow space for 50 metres of 12 mm Engbo braided anchor rope. If the height is less than 40 cm, make sure the rope does not pile all the way up to the winch. If this is the case, use a shorter rope.

The winch should be installed far enough to the centre of the stern that the anchor does not drag in the wave curving in right behind the boat.

Use of anchor bracket

The bracket for the rope must be installed with the sheaves outside the platform to ensure the anchor/rope clears the platform.

Stern penetrations

Make sure the hole in the hull is located correctly based on the direction of the rope. To avoid unnecessary wear and tear the rope should not touch the sides of the hole vertically or horizontally, and the hole must be elliptical vertically to allow for rope movement on the roller when winching.

Fixed anchor bracket or hinged anchor bracket

If the winch must be installed so low in relation to the swim platform that it will pull the anchor forward/inward rather than upward/inward, it is preferable to use our hinged anchor bracket (see catalogue).

Cover with rollers for hole

If it proves difficult to route the rope straight vertically from the gypsy to the anchor roller, it may be beneficial to use a cover with rollers to allow for the rope angle.

NOTE! Remember to fasten the end of the rope to the boat.

OFFICE: Wirgenes vei 7, N-3159 Barkåker **POSTAL ADDR.**: P.O. Box 2288 Postterminalen, N-3103 Tønsberg
E-MAIL: support@engbo.no **WEB**: www.engbo.no **TEL.**: +47 33 00 31 50 **FAX**: +47 33 00 31 60

INSTALLATION EXAMPLES

The pictures below show different installations

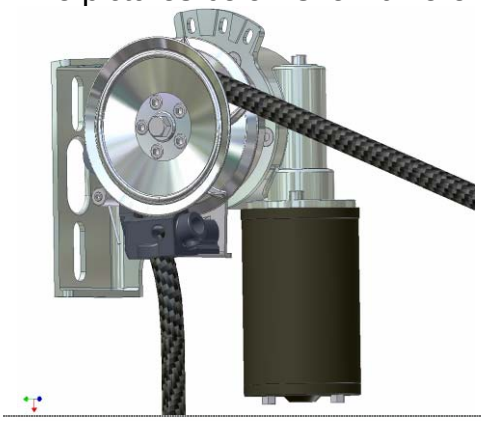

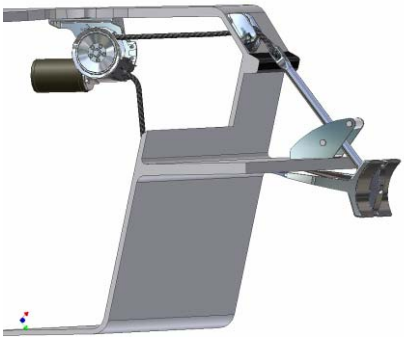

Mini 100 only

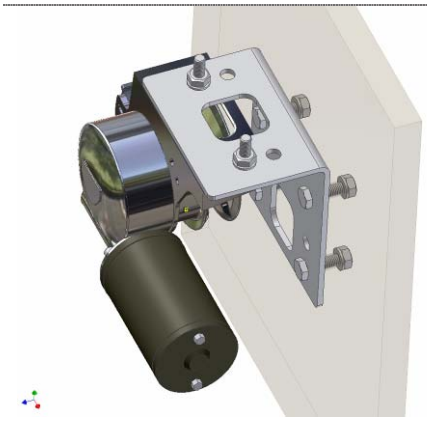

OFFICE: Wirgenes vei 7, N-3159 Barkåker **POSTAL ADDR.**: P.O. Box 2288 Postterminalen, N-3103 Tønsberg
E-MAIL: support@engbo.no **WEB**: www.engbo.no **TEL.**: +47 33 00 31 50 **FAX**: +47 33 00 31 60

OPERATING INSTRUCTIONS

General

Read the entire operating instructions carefully before using the winch.

1. Please remember that heavy loads are involved. Therefore use common sense when operating the winch and make sure that:
   - ❖ Fingers do not become entangled in rope, rollers or gypsy.
   - ❖ The rope is always monitored when hoisting the anchor.
   - ❖ Everyone on board is informed about how to operate the winch.

2. Always operate the winch from a location with full overview when hauling the anchor. This is necessary in case the anchor hooks on something unexpected that may damage the boat.
3. If the winch works hard when raising the anchor, release the button for a moment. When the boat has started moving aft, start the winch again. This will ensure that the winch will work less hard and draw less current.
4. Keep the anchor rope taut when winding long lengths of rope.

5. Should the anchor be stuck on the bottom, do as follows: Pay out some rope and fasten it to a cleat in the boat. Use the boat to loosen the anchor. When the anchor is loose, use the winch in the normal manner.

6. The winch can be operated for a maximum of 3 minutes with a normal load.

7. **Always secure** the anchor to the boat with a safety rope when sailing. A snap hook can be used to fasten it to an eye/shackle, for example. A safety rope is enclosed.

8. Children must not operate the winch.

9. Careless use may result in unnecessary damage/injury.

10. Always make sure there is sufficient battery capasity when using the winch. **Always** keep the engine running while using the winch.

11. The winch has an electronic overload protection. If necessary, let the winch cool down for approximately 15 min and try again. In an emergency, this protection may be overridden by turning the winch off and back on again. (Overrides are saved by the processor.)

12. Engbo AS is not responsible for injury or damage as a result of the use of the winch.

NOTE! ALWAYS KEEP THE ENGINE RUNNING WHEN USING THE WINCH AND ALWAYS TURN OFF THE POWER TO THE WINCH WHEN NOT IN USE.

OFFICE: Wirgenes vei 7, N-3159 Barkåker **POSTAL ADDR.**: P.O. Box 2288 Postterminalen, N-3103 Tønsberg
E-MAIL: support@engbo.no **WEB**: www.engbo.no **TEL.**: +47 33 00 31 50 **FAX**: +47 33 00 31 60

Dropping anchor

Engbo MINI 100 and MIDI 200 has a true free-fall anchor drop function. One press of the button and the anchor drops freely to the bottom.
The anchor should be dropped a distance from where the boat will be located corresponding to 3-5 times the water depth.

When the anchor winch has been turned off with the main switch, **always** press the "DOWN/OUT" button first (marked with an arrow pointing downward). This button must be held in for at least 1 second to drop the anchor.
The winch will then pay out for 3 seconds to ensure correct free-fall function. (This time period is 3 seconds regardless of how long the button is pressed.)

Hauling in

When the anchor is out, haul in the anchor by pressing the "UP/IN" button (marked with an arrow pointing upwards). The winch will haul in the rope for as long as the button is held in.
The winch always starts with 3 seconds at low speed before increasing to full speed.
The winch can also be operated at low speed by pushing and releasing the "IN" button several times.

Automatic end stop

Note! MIDI 200 ONLY
Assumes correctly positioned end stop wires on the anchor rope.
When the first end stop wire is sensed by the end stop sensor when hauling in the anchor, the winch will stop. The button must then be released and pushed once more. The winch will then operate at low speed until the second end stop is sensed by the sensor. The winch will then stop completely.

Forced operation

NOTE! MIDI 200 ONLY
If the anchor needs to be lifted a little further after end stop 2, this can be done by holding down the "IN" button for more than 10 seconds. The winch will then operate at extra low speed for as long as the button is held down.
NOTE! This operation must only be carried out under very controlled circumstances to prevent damage.

NOTE! ALWAYS KEEP THE ENGINE RUNNING WHEN USING THE WINCH AND ALWAYS TURN OFF THE CURRENT TO THE WINCH WHEN NOT IN USE.

OFFICE: Wirgenes vei 7, N-3159 Barkåker **POSTAL ADDR.**: P.O. Box 2288 Postterminalen, N-3103 Tønsberg
E-MAIL: support@engbo.no **WEB**: www.engbo.no **TEL.**: +47 33 00 31 50 **FAX**: +47 33 00 31 60

Installation of end stop wires

NOTE! MIDI 200 ONLY

Integrated in the rope rejector is an inductive sensor that signals end stop when the anchor has been lifted all the way up. To activate the sensor, two brass wires (included) are fitted on the rope (see procedure below).

The outer diameter of the brass wire winding must be similar to the outer diameter of the rope, or as close as possible. This is necessary in order for the inductive sensor to be able to detect the wire.

To locate the brass wires correctly on the rope, haul in the anchor until the thumble is 25-50 cm below the rope roller (operate at slow speed for the final length), and mark the rope with a marker pen at the inductive sensor. The anchor is then reeled in at low speed to the desired final resting position. Mark the rope once more at the sensor. These marked positions are where the wires shall be fastened.

These wires will be exposed to wear by the gypsy, especially during heavy loads, and must therefore be inspected regularly. Replace damaged wires as needed.

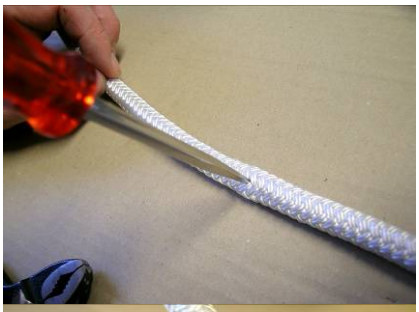

Cut approximately 25 cm of brass wire for each signal location. (The length of the supplied brass wire is approximately 1m.)

The rope and installation is shown with the anchor at the bottom right.

Use an awl to make a hole for the wire where the rope is marked.

Bend 6-7 mm at 90 degrees and push this end into the hole.

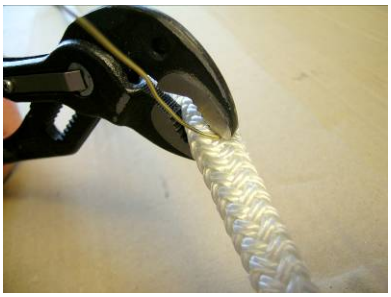

It may be beneficial to use a pair of pliers to force the wire into the rope and to keep it in place initially while winding the wire around the rope.

OFFICE: Wirgenes vei 7, N-3159 Barkåker **POSTAL ADDR.**: P.O. Box 2288 Postterminalen, N-3103 Tønsberg
E-MAIL: support@engbo.no **WEB**: www.engbo.no **TEL.**: +47 33 00 31 50 **FAX**: +47 33 00 31 60

Wind the wire four complete turns around the rope.

After four turns and on the opposite side of where you started, "sew" the wire into the rope. Use the awl to carefully make a hole for the wire, push the wire through and tighten.

Repeat the sewing operation once more.

Then cut the wire and bend the end at 90 degrees towards the middle of the rope.

Force the end into the rope with the pliers.

A fitted end wire should look like this with close windings and the ends secured inside the rope.

OFFICE: Wirgenes vei 7, N-3159 Barkåker **POSTAL ADDR.**: P.O. Box 2288 Postterminalen, N-3103 Tønsberg
E-MAIL: support@engbo.no **WEB**: www.engbo.no **TEL.**: +47 33 00 31 50 **FAX**: +47 33 00 31 60

WIRELESS REMOTE CONTROL

Floating, splash-proof, hand-held remote control unit. The operating range is > 30 m under normal conditions. The Engbo remote control is a high quality, narrow band unit with two-way communication with the electronics unit. Each unit has a unique code.

It uses three standard AAA (LR03) batteries (included).
It has anti-slip strips on the back.
Fits in a standard mobile phone holder.
Hand cord is included as standard (easily removed).
The battery lifetime is > 2 seasons based on normal use.

One remote control can be used to operate two winches. The remote control units are normally supplied programmed for the enclosed electronics unit. Both button pairs are then programmed.

Operating instructions

The remote control is battery-operated. To ensure longer lifetime, it will automatically go to “sleep” mode five minutes after the last button was pushed. Deactivation is signalled with two short sound bursts and blinks in the "POWER" indicator. The remote control is activated by holding down any button for 1.5 seconds. Activation is indicated by a steady green light in the "POWER" indicator and a short sound. All subsequent use of buttons is shown on the associated indicator above the button and a short sound.

The "POWER" indicator is also used to indicate low voltage at the electronics unit. This is indicated by an orange light. If the winch is overloaded and requires time to cool down, this will also be indicated by an orange light. The indicator will be red in case of system faults and slowly blink red together with short sounds if the remote is unable to communicate with the electronics unit. These error messages are shown when buttons are pushed.

Dropping anchor

When the remote control has been **activated**, the anchor can be dropped by pressing the "DOWN/OUT" button (marked with downwards arrow) **again**. This button must be held in for at least 1 second to drop the anchor.
The winch will then pay out for 3 seconds to ensure correct free-fall function. (This time period is 3 seconds regardless of how long the button is pressed.)

OFFICE: Wirgenes vei 7, N-3159 Barkåker **POSTAL ADDR.**: P.O. Box 2288 Postterminalen, N-3103 Tønsberg
E-MAIL: support@engbo.no **WEB**: www.engbo.no **TEL.**: +47 33 00 31 50 **FAX**: +47 33 00 31 60

Hauling in

When the anchor has been dropped, start weighing anchor by pressing **once** on the "UP/IN" button (marked with upwards arrow). If the remote control has been deactivated (more than five minutes elapsed since the last button activation), it will first be turned on and then immediately start hauling in the anchor. The winch always starts with 3 seconds at low speed before increasing to full speed.
The winch can thereby also operate at low speed by pushing and releasing the "IN" button several times.

Forced operation

NOTE! MIDI 200 ONLY
If the anchor needs to be lifted a little further after end stop 2, this can be done by holding down the "IN" button for more than 10 seconds. The winch will then operate at low speed for as long as the button is held down.
This is indicated on the remote control by a green light slowly blinking above the "IN" button and rapid, brief sound bursts.
NOTE! This operation must only be carried out under very controlled circumstances to prevent damage.

Battery replacement

The remote control uses three regular AAA/LR03 alkaline batteries. The battery lifetime is more than two seasons under normal use.
When replacing batteries, open the unit by unscrewing all five screws.
NOTE! The screws are of different lengths and have O-rings under the screw heads.
Replace the batteries and make sure all point the same way with the + up and the – downwards towards the edge as illustrated.
Reassemble the back cover and carefully screw the parts together until the housing gasket is **lightly compressed**. The impermeability of this unit depends on intact O-rings and intact gasket with the right compression.

NOTE! To ensure a long lifetime, this remote control has acid-proof machine screws and screw inserts in the housing. The screws may penetrate the housing if screwed carelessly or too much force is used.
(Not covered by the warranty.)

OFFICE: Wirgenes vei 7, N-3159 Barkåker **POSTAL ADDR.**: P.O. Box 2288 Postterminalen, N-3103 Tønsberg
E-MAIL: support@engbo.no **WEB**: www.engbo.no **TEL.**: +47 33 00 31 50 **FAX**: +47 33 00 31 60

Retrofit

If the remote control is purchased after the electronics unit, the electronics unit must be fitted with an antenna. The remote control and electronics unit must also be coded/taught electronically to communicate with each other.

Remove the left rubber cover (the one closest to the Engbo logo). Then push the antenna through the cover (on one side).

While holding down the antenna connector handle, push the antenna all the way down into the bottom of the clamp. Release the handle and the antenna is fixed in place.

Replace the rubber cover. Start by pushing the rubber cover in by the antenna and continue around the edge until the cover is fixed in place.

Make sure not to twist the cover with the antenna.

(The remote control will function over short distances also without the antenna.)

OFFICE: Wirgenes vei 7, N-3159 Barkåker **POSTAL ADDR.**: P.O. Box 2288 Postterminalen, N-3103 Tønsberg
E-MAIL: support@engbo.no **WEB**: www.engbo.no **TEL.**: +47 33 00 31 50 **FAX**: +47 33 00 31 60

Coding the unit

Image A

Image B

Image C

The remote control (transmitter) can be coded/taught electronically to communicate with the selected electronics unit(s) (receiver), (max. two). The electronics unit and remote control must be close to each other and set to code/teaching mode at the same time as described below:

1. The remote control unit is set in code/teaching mode by holding down both buttons in the pair of buttons to be used for 10 seconds (see Image A). *The remote control indicates that it is in the code/teaching mode by the "POWER" indicator starting to slowly blink green and a short sound. The remote control will remain in this mode until correctly coded or until the same two buttons are pushed again. If not, it will automatically turn off after five minutes. When exiting from this mode, there will be a short sound burst and the "POWER" indicator will no longer be lit.*

2. Hold down both switches on the permanently installed switch panel **while turning on the main switch**. Then release the switches (see Images B and C). *The electronics unit will now be in code mode. (This can also be done by temporarily connecting between 1, 2 and 3 on the electronics unit.) The electronics unit will now remain in the programming mode for only **10 seconds**, and then switch back to the normal mode again.*

3. Press one of the two switches on the remote control that controls either the bow or aft winch. *This must be done within the 10 seconds that the electronics unit is in the code mode. Correct coding is confirmed with a short sound signal from the remote control.*

4. The remote control is now coded and ready for use.

This coding/teaching can be done an unlimited number of times.

OFFICE: Wirgenes vei 7, N-3159 Barkåker **POSTAL ADDR.**: P.O. Box 2288 Postterminalen, N-3103 Tønsberg
E-MAIL: support@engbo.no **WEB**: www.engbo.no **TEL.**: +47 33 00 31 50 **FAX**: +47 33 00 31 60

MAINTENANCE

Winter storage

- Before winter storage, the winch and all electrical terminals and connections must be coated with a moisture proofing spray.
- Make sure the winch is protected against snow during winter storage.
- Do not cover up the winch to avoid condensation during winter storage.
- Remove the rope before winter storage. Soak it in mild soapy water overnight to remove salt deposit and dirt. This will ensure that the rope remains supple for many years and allows for checking and possible replacement of the end stop wires.

If relevant, clean the rope locker on the inside and remove any seaweed, mud, etc.

Adjustment of end stop device

NOTE! MIDI 200 ONLY

The device will normally be adjusted and extend approximately 1 mm from the holder. If adjustment is necessary, loosen the screw holding the inductive sensor. Move the sensor to the correct position, but make sure that the rope will not be caught in it. Retighten the screw. (Previous model shown. Latest models: Install sensor onto end wall.)

Adjustment of the rope roller guide

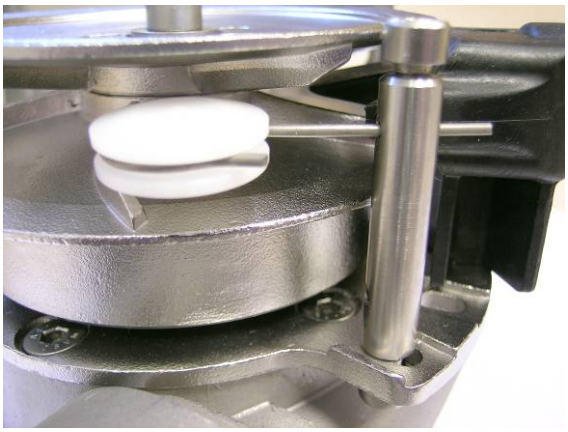

The guide will normally be adjusted for 12 mm rope.

The guide must be at a straight angle in relation to the rope with a gentle pressure against the rope when the rope is located in its normal position in the gypsy.

If adjustment is needed, loosen the screw under the bracket to adjust the pressure against the rope. Loosen the screw on top of the holder to adjust the angle and distance.

OFFICE: Wirgenes vei 7, N-3159 Barkåker **POSTAL ADDR.**: P.O. Box 2288 Postterminalen, N-3103 Tønsberg
E-MAIL: support@engbo.no **WEB**: www.engbo.no **TEL.**: +47 33 00 31 50 **FAX**: +47 33 00 31 60

TROUBLESHOOTING – MINI 100/MIDI 200

(For wiring, see diagram under the section "Wiring".)

	Symptom:	Action and please note the following:	Action results in:	Result
		NOTE! The main current switch **must** be turned off when connecting and disconnecting cables and performing mechanical work.		
1	**The winch is totally "dead". Nothing works.**	Check that: - the main switch is turned on, - the fuse is intact - all terminals have good contact - all connections are according to diagram in the manual - there is sufficient power to the winch motor. (See Item 3)		
2	**The winch will not drop the anchor, and only reels in for 3 s.**	**Check that:** - connections to 1, 2 and 3 are according to diagram. By switching 1 and 3, the winch should function correctly.		
3	**The winch does not work or pulls very poorly.**	**IMPORTANT!** **Based on previous experience, this is the most common problem.** Look for main current faults: Measure the battery voltage at the input to the winch while operating the winch.	The voltage must be minimum 10.5 V when operating the winch to ensure normal motor function.	**If** the voltage is below 10.5 V, the reason must be determined. Check all connections, e.g. main switch, fuse, battery terminals, battery voltage and the battery's general condition. **If** the voltage is higher than 10.5 V but the motor will still not run, the reason may be that extended use/overloading of the winch has resulted in the electronic protection shutting off the motor. Wait 20 min. to let it cool down and try again.
4	**If the winch still does not function.**	Disconnect cables to 1, 2 and 3. -------- Strip the insulation on the ends of a loose cable (approx. 10 cm) and establish contact between these points: Cable between 2 and 3 Cable between 1 and 2	Functions that normally are controlled from the switch panel are disconnected to allow forced operation of the winch directly from the electronics unit. -------- The winch is released and the anchor dropped. Winch reels in.	The switch panel is disconnected. -------- If the winch functions normally using this procedure, the fault is located in a cable to the switch panel, or the switch panel itself, and must be replaced.
5	**If the end stop does not function:** **(MIDI 200 ONLY)**	**Check that**: - connections to 4, 5 and 6 are according to diagram. - the power to sensor (between 4 and 6) is more than 10 V DC - end stop wires are in place.	The indicator lamp on the sensor must light up when the brass ring on the rope is by the sensor. (Can also be tested using a screwdriver, or similar, by the sensor.)	If the voltage is OK and the lamp does not light, the sensor must be replaced.
If the winch still does not function normally after this procedure, the fault is located in the winch itself. Contact the nearest dealer, or Engbo AS, Tønsberg. Tel.: +47 33003150, Fax: +47 33003160, E-mail: support@engbo.no				

OFFICE: Wirgenes vei 7, N-3159 Barkåker **POSTAL ADDR.**: P.O. Box 2288 Postterminalen, N-3103 Tønsberg
E-MAIL: support@engbo.no **WEB**: www.engbo.no **TEL.**: +47 33 00 31 50 **FAX**: +47 33 00 31 60

FCC Statements

This device complies with Part 15 of the FCC Rules. Operation is subject to the following two conditions: (1) this device may not cause harmful interference, and (2) this device must accept any interference received, including interference that may cause undisired operation.

Changes or modifications to the equipment not expressly approved by the party responsible for compliance could void the user's authority to operate the equipment.

NOTE: This equipment has been tested and found to comply with the limits for a Class B digital device, pursuant to Part 15 of the FCC Rules. These limits are designed to provide reasonable protection against harmful interference in a residential installation. This equipment generates, uses and can radiate radio frequency energy and, if not installed and used in accordance with the instructions, may cause harmful interference to radio communications. However, there is no guarantee that interference will not occur in a particular installation.

If this equipment does cause harmful interference to radio or television reception, which can be determined by turning the equipment off and on, the user is encouraged to try to correct the interference by one or more of the following measures:

-- Reorient or relocate the receiving antenna.

-- Increase the separation between the equipment and receiver.

-- Connect the equipment into an outlet on a circuit different from that to which the receiver is connected.

-- Consult the dealer or an experienced radio/TV technician for help.

OFFICE: Wirgenes vei 7, N-3159 Barkåker **POSTAL ADDR.**: P.O. Box 2288 Postterminalen, N-3103 Tønsberg
E-MAIL: support@engbo.no **WEB**: www.engbo.no **TEL.**: +47 33 00 31 50 **FAX**: +47 33 00 31 60

Declaration of Conformity

We, the undersigned (☒ Manufacturer / ☐ The manufacturers authorized representative established within EEA):

Company	ENGBO AS
Address	Wirgenesvei 7, N-3157 Barkåker
Country	NORWAY
Telephone number	+47 3300 3150
Telefax number	+47 3300 3160
E-mail	support@engbo.no

Certify and declare under our responsibility that the following products:

Product Description	Remote control unit and/or electronic control unit for electric side thrusters and electric windlasses and mooring motors.
Manufacturer	Engbo AS
Brand Name	Complete BP series thruster systems, Complete CT series thruster systems with control units. Mini/Midi/Maxi and 30 and 40 series windlasses and mooring systems.
Model/Type	RC-01 and ECU-01 units and modules.

Is tested to and conforms with the essential test suites included in the following standards, which are in force within the EEA:

Standard	**Issue date**	**Reference to report/file**
IEC 60950-1:2001 EN 60950-1:2001,A11:2004		Test report 53207, Nemko AS
EN 301 489-1:V.1.4.1		Test report 04/695/3, N-Comlab, variable speed drive off
EN 301 489-17:V.1.2.1		Test report 04/695/3, N-Comlab, variable speed drive off.
EN 61800-3:2004		Test report 04/695/3, N-Comlab, variable speed drive on.
IEC 60533:1999		Variable speed drive on.
EN 300 220-3: V.1.1.1		Test report 04/695/2, N-Comlab

And therefore complies with the essential requirements of the following directives:

Directive Name	**Directive number**	**Further identification**
R&TTE directive	1999/5/EC	
EMC directive	89/336/EEC	
General Product Safety Directive	2001/95/EC	
LVD Directive	73/23/EEC	Low Voltage Directive

The following Notified Bodies have been consulted in the Conformity Assessment procedure (whenever applicable):

Notified Body number	**Name and address**
0470	Nemko AS, Gaustadalleen 30, P.O. Box 73 Blindern, N-0314 OSLO NORWAY

The technical documentation as required by the conformity assessment procedure is kept at the following address for a period ending at least 10 years after the last product has been manufactured at the disposal of the relevant national authorities of any Member State for inspection:

Company	Engbo AS
Address	Wirgenesvei 7, N-3157 Barkåker
Country	NORWAY
Telephone number	+47 3300 3150
Telefax number	+47 3300 3160
E-mail	support@engbo.no

Product is CE-marked in	NORWAY

Drawn up in Tønsberg	NORWAY
Date 3/3 -2006	~~2006-02-08~~
	engbo® ENGBO AS – *et selskap i Engbo gruppen* Pb. 2288 PT, 3103 Tønsberg, Tlf.: 33 00 31 50 Fax: 33 00 31 60
Signature and Company Stamp	Øystein Enger, General Manager

DET NORSKE VERITAS

MANAGEMENT SYSTEM CERTIFICATE

Certificate No. 2003-OSL-AQ-7308

This is to certify that
THE QUALITY MANAGEMENT SYSTEM
of

Engbo AS

at
Tønsberg, Norway

has been found to conform to the Quality Management System Standard
NS-EN ISO 9001 : 2000

This Certificate is valid for the following product or service ranges:

Design, production and sales of bow thrusters and mooring systems for recreational and commercial craft.

Original certificate valid from:
2003-02-24

This Certificate with Appendix is valid until:
2009-02-24

Asbjørn Lønmo
Lead Auditor

NORWEGIAN ACCREDITATION
QUAL 002

Place and date:
Høvik, 2006-01-09

For the accredited unit:
Det Norske Veritas Certification AS

Sissel Vaksvik
Management Representative

Lack of fulfilment of conditions as set out in the Appendix may render this Certificate invalid.

DET NORSKE VERITAS CERTIFICATION AS, Veritasveien 1, N-1322 Høvik, Tel.: +47 67 57 99 00, Fax: +47 67 57 99 11