APPENDIX D

: BLOCK DIAGRAM
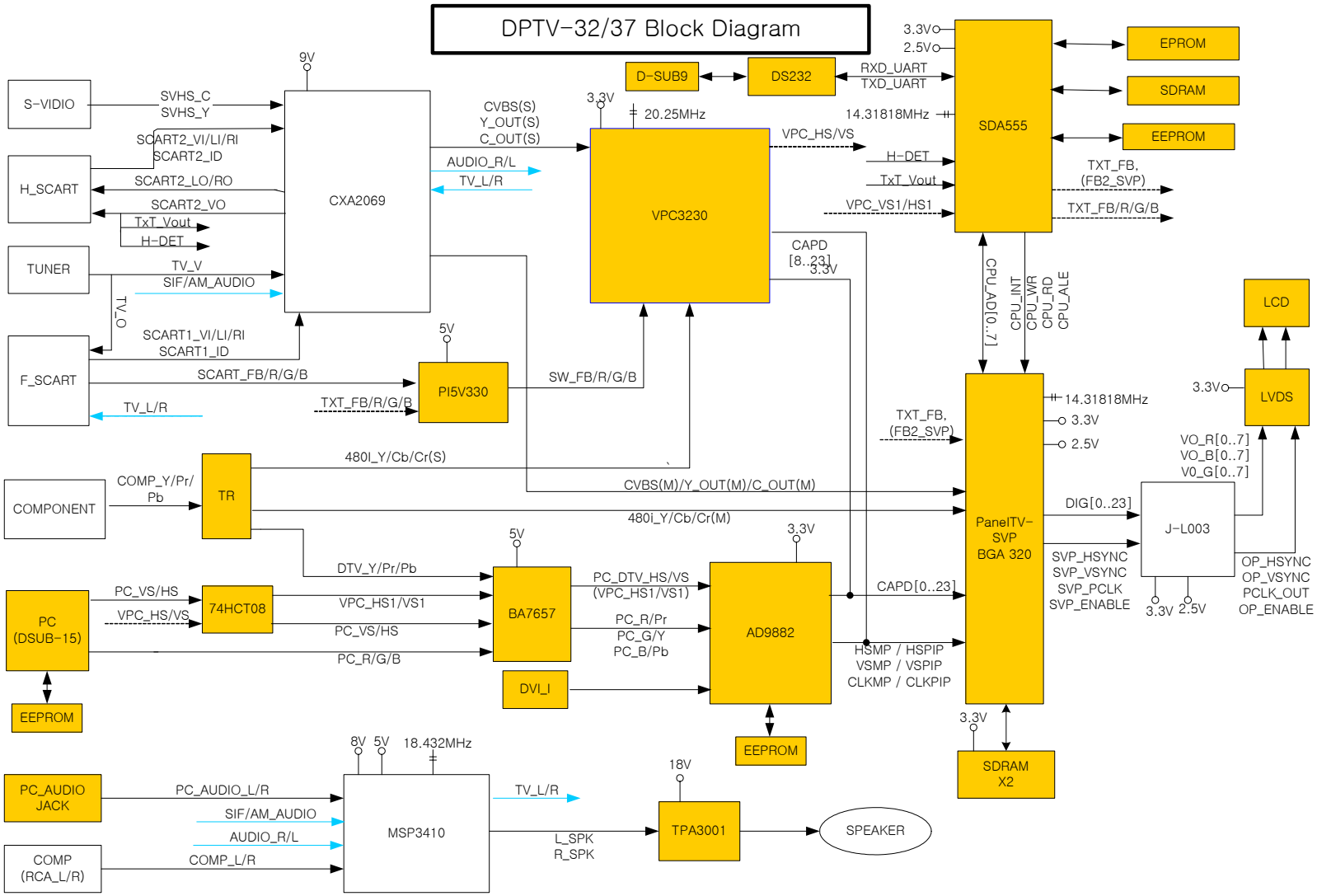
DPTV-32/37 Block Diagram