Excellence in Compliance Testing

Certification Exhibit

FCC ID: R7PEC6R1S4

FCC Rule Part: 15.247, 15.249

ACS Project Number: 15-0053

Manufacturer: Landis+Gyr Technology, Inc.
Model: GPR2-PT

Manual

5015 B.U. Bowman Drive Buford, GA 30518 USA Voice: 770-831-8048 Fax: 770-831-8598

GPR2-PT Installation Guide

Publication: 98-1678 Rev AA

LANDIS+GYR CONFIDENTIAL INFORMATION

Limitation on Warranties and Liability

Information in this document is subject to change without notice. This manual or any part of it thereof may not be reproduced in any form unless permitted by contract or by written permission of Landis+Gyr.

In no event will Landis+Gyr be liable for any incidental, indirect, special, or consequential damages (including lost profits) arising out of or relating to this publication or the information contained in it, even if Landis+Gyr has been advised, knew, or should have known of the possibility of such damages.

© 2015 Landis+Gyr, Inc. All Rights Reserved

GPR2-PT Installation Guide			
Publication: 98-1678			
Revision History			
Modification Date	**Revision**	**Description**	**Author**
03/25/2015	AA	Pre-Release Draft	Charlie Goerges
Landis+Gyr Website: www.landisgyr.com E-mail: solutionsupport.na@landisgyr.com Technical Support: 1-888-390-5733	© 2015 Landis+Gyr All rights reserved.		

Table of Contents

Chapter 1: Pre-Installation 5
Before You Begin 5
Safety Overview 5
FCC Information to the User 6
FCC Class B. 6
RF Exposure 6
Compliance 6
Preliminary Checks 7
Site Requirements 7
Required Installation Tools 7
Required Parts 7

Chapter 2: GPR2-PT Mounting Instructions 9
GPR2-PT Mounting 9
Installation Instructions 9
GPR2-PT Mounting Instructions 13
Eagle Cable Entry 13
Serial Connection Wiring Diagram for Eagle Correctors 14
Mercury Cable Entry 15
Serial Connection Wiring Diagram for Mercury/Honeywell Correctors 17
Battery Replacement Procedure 18
Corrector Connection 19
Mercury Corrector (ERX) 19
Eagle Corrector (XARTU) 20
Initial Configuration 21

Appendix A: GPR2-PT Waterproofing 23
Applying Water Sealant to Circuit Board Connections 23
Ordering Information 28

Appendix B: Installation in Hazardous Locations 31
Information 31

1

Pre-Installation

Before You Begin

This text contains the symbols which are explained below.

NOTE: Notes provide important information about products and installation.

CAUTION: Cautions provide information that you must read to avoid making relatively moderate errors.

WARNING: Warnings provide special, must-read information. If you ignore a warning you may create a safety hazard, omit essential data, or make a critical error.

Safety Overview

NOTE: Proper planning and thorough preparation are critical for successful installation. This chapter outlines basic requirements for the pre-installation phase.

Prior to starting the installation process, you must develop and launch an installer safety training plan for initial, refresher, and ongoing safety training. Ensure that installers receive appropriate initial and refresher training to meet their specific safety-related responsibilities. Installers should be instructed in the following safety elements as well as any site-specific safety issues.

- New duties for which the installer has not previously received training.
- New processes and methodologies representing new risks that are introduced into the installation environment.
- Situations where previously unidentified risks are reported.
- Hazard Communication (Employee Right to Know)
- Lifting
- Safe driving
- Use of hand tools
- Confined space

The installation supervisory team assumes responsibility for ensuring that installers are properly trained, authorized, and continually qualified to perform their work. The team must also take responsibility for the safety of their installers and to assure safe work methodologies. Installers must

understand that their supervisor's responsibility does not relieve them from their individual responsibility to perform the work safely and to follow all safety rules and procedures applicable to their work.

FCC Information to the User

Manufacturer: Landis+Gyr

Model Name: GPR2-PT

FCC ID: R7PEC6R1S4

Module Model: GPR2-PT

This device complies with Part 15 of the FCC rules. Operation is subject to the following two conditions:

1. This device may not cause harmful interference, and
2. This device must accept any interference received, including interference that may cause undesired operation.

FCC Class B

This equipment has been tested and found to comply with the limits for a Class B digital device, pursuant to Part 15 of the FCC Rules. These limits are designed to provide reasonable protection against harmful interference in a residential installation. This equipment generates, uses, and can radiate radio frequency energy and, if not installed and used in accordance with the Instructions, may cause harmful interference to radio communications. However, there is no guarantee that interference will not occur in a particular installation. If this equipment does cause harmful interference to radio or television reception, which can be determined by turning the equipment off and on, the user is encouraged to try to correct the interference by one or more of the following measures:

1. Reorient or relocate the receiving antenna.
2. Increase the separation between the equipment and receiver.
3. Consult Landis+Gyr or an experienced radio technician for help.

WARNING: Changes or modifications to this device not expressly approved by Landis+Gyr could void the user's authority to operate the equipment and the product warranty.

RF Exposure

This equipment complies with FCC radiation exposure limits set forth for an uncontrolled environment. This equipment should be installed and operated with minimum distance 20 cm between the radiator and your body. This transmitter must not be co-located or operating in conjunction with any other antenna or transmitter.

Compliance

This apparatus is suitable for Class I, Division 2, Group D Hazardous Locations.

WARNING: Substitution of components may impair the suitability for Class I, Division 2 applications. Replace battery only with Landis+Gyr part number 40-1235.

Substitution of components may impair intrinsic safety. Please refer to the notes in Appendix B for connecting to this intrinsically safe device.

Preliminary Checks

1. The installer will verify correct site, as specified on work order.
2. The installer will verify that the site is safe for installer activity and equipment.
3. The installer will notify the customer of installer presence and activity, telling the customer that meter access is required. If necessary, the installer will have the customer sign the work order.
4. When installing meters, the installer will follow guidelines issued by the utility in addition to those given in this guide.
5. The installer will never perform an installation during a lightning storm or under excessively wet conditions.

Site Requirements

The site must comply with the following criteria:

1. There is no chance that another object will be set over the antenna.

Required Installation Tools

Table 1-1. Typical Gas Meter Module Installation Tool List

Torx Pin Head Driver, T10	Phillips Driver, #2
Torque Driver, 0.5in-lbs to 20in-lbs	Torque Wrench (Crowfoot), 20in-lbs to 60in-lbs
Standard Flathead Driver	Small Flathead for Screw Terminal
Slip Joint Pliers	

Recommended Torque Driver Source:
Mountz
1080 N. 11th St. San Jose, CA 95112
Phone: 877-833-1704 or 408-292-2214
Fax: 408-292-2733
e-mail: sales@mountztorque.com

Required Parts

All installations will require the GPR2-PT module (40-2424), serial communication cable (19-2380), and pipe-mount kit (45-2478).

Some installations might require an optional cable conduit.

2

GPR2-PT Mounting Instructions

GPR2-PT Mounting

The GPR2-PT module will be mounted vertically and upright, on a pipe-mounting bracket in proximity to the EVC, to minimize the cable length. This bracket can accommodate pipe diameters in the range of 1" to 3.25". Optionally, the GPR2-PT can be mounted on a nearby vertical surface. The cable will be routed in order to minimize its exposure to possible damage. Figure 1 below shows a typical installation.

Figure 2 - 1. GPR2-PT Mounting Example

Installation Instructions

1. Find a mounting location on a pipe near the EVC. Attach the GPR2-PT enclosure to the mounting bracket as shown in the following figures.

NOTE: The GPR2-PT must face away from nearby walls and should be installed in a location unobstructed by gas pipes.

A. Determine whether the GPR2-PT is to be installed on a horizontal or vertical pipe.

- Figure 2 - 4 shows an example bracket orientation for horizontal pipe installations.
- Figure 2 - 5 shows an example bracket orientation for vertical pipe installations.

B. Attach the GPR2-PT enclosure to the L-shaped bracket through the smaller holes with four 6-20 x ½ inch security Torx screws from the GPR2-PT Pipe Mounting Kit (45-2478).

NOTE: The GPR2-PT must be installed on the bracket with the cable entry notch located at the BOTTOM of the enclosure to prevent dirt and moisture from collecting inside the enclosure.

Figure 2 - 2. Enclosure Cable Entry Notch

C. Using a T-10 security Torx driver, tighten the screws to 10 in-lbs (+/- 2 in-lbs). Tighten the screws using a crisscross pattern to secure the enclosure to the bracket.

Figure 2 - 3. Attach GPR2-PT to Mounting Bracket

NOTE: The four longer security Torx screws are GPR2-PT enclosure cover screws. Cover screws are included in the 40-2424 GPR2-PT kit.

2. Secure the mounting bracket with GPR2-PT to the pipe.

A. Hold the GPR2-PT bracket assembly against the pipe so that the GPR2-PT is vertical and upright.

B. Insert V-bolt (28-1319) through the 2 middle holes in the bracket (28-0396).

C. Add flat washers, then split-lock washers. Thread nuts over split-lock washers and tighten to **45 +/- 5.0 in-lbs**.

Figure 2 - 4. GPR2-PT/Bracket Assembly for Horizontal Pipe Installation

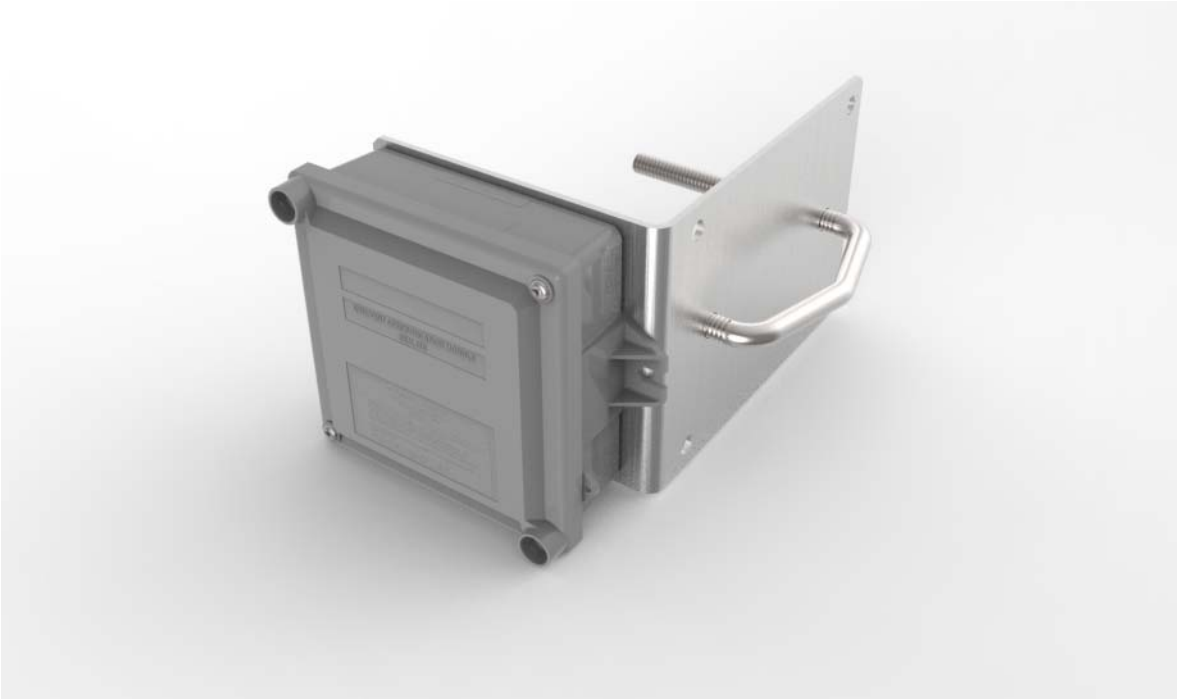

Figure 2 - 5. GPR2-PT/Bracket Assembly for Vertical Pipe Installation

3. Route the serial cable along the most direct and convenient route between the Meter and the GPR2-PT (preferably along the pipe). Secure the serial cable to the pipe with black nylon UV-rated tie wraps in locations along the pipe 12" apart.
4. Connect the cable to the EVC using the model-specific instructions below for Eagle or Mercury EVCs.

WARNING: Refer to the meter and EVC manufacturers' instructions and warnings on electrical wiring and electrostatic discharge. Local electrical codes must be followed when wiring AMR devices in a gas metering environment.

GPR2-PT Mounting Instructions

Eagle Cable Entry

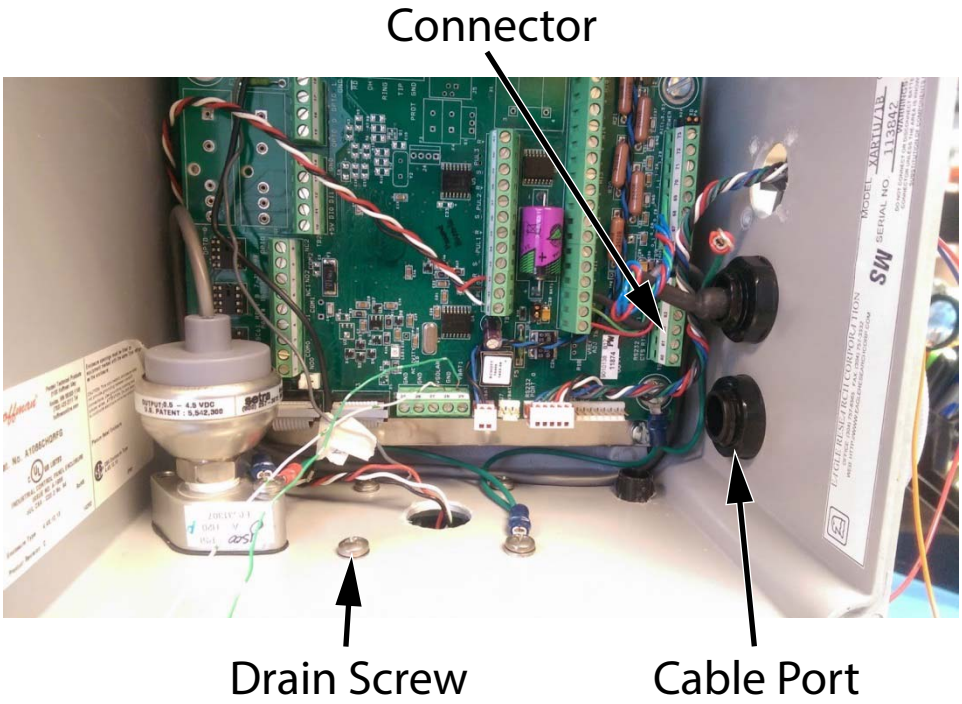

Figure 2 - 6. Eagle Corrector Wiring

1. Insert serial cable (19-2380) through cable port shown. If port is filled with a cap, replace with 16-1705 w/ 16-1706 or any similar, water-tight cord grip that will fit a 0.33 inch diameter cable.
2. Pull the cable through the port, far enough to reach the connector and drain hardware.
3. Attach the cable leads into the TB8 connector using a small flathead screwdriver to tighten the wires. Use the wiring diagram below.
4. Using a Phillips screwdriver, attach the drain terminal to the proper location.
5. Once the connections are secure, make sure the cord grip is sufficiently tightened on the cable.

Serial Connection Wiring Diagram for Eagle Correctors

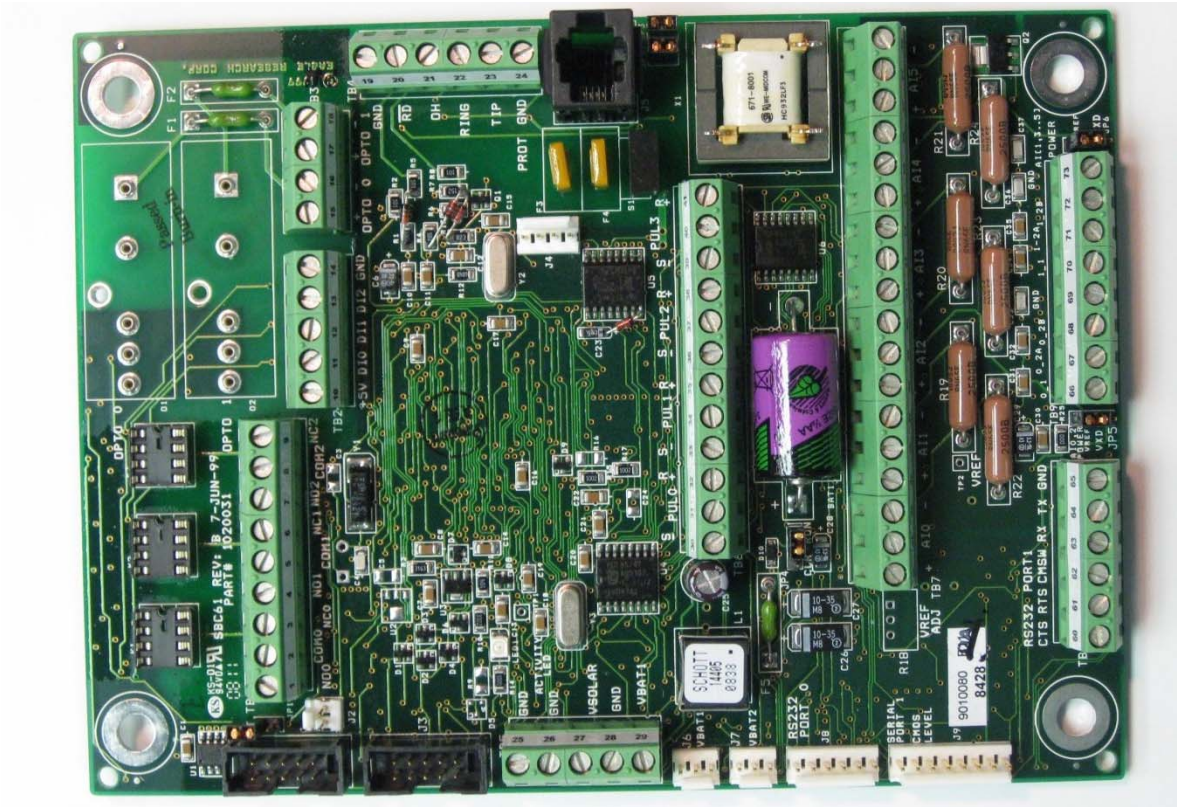

Figure 2 - 7. XARTU Main Board

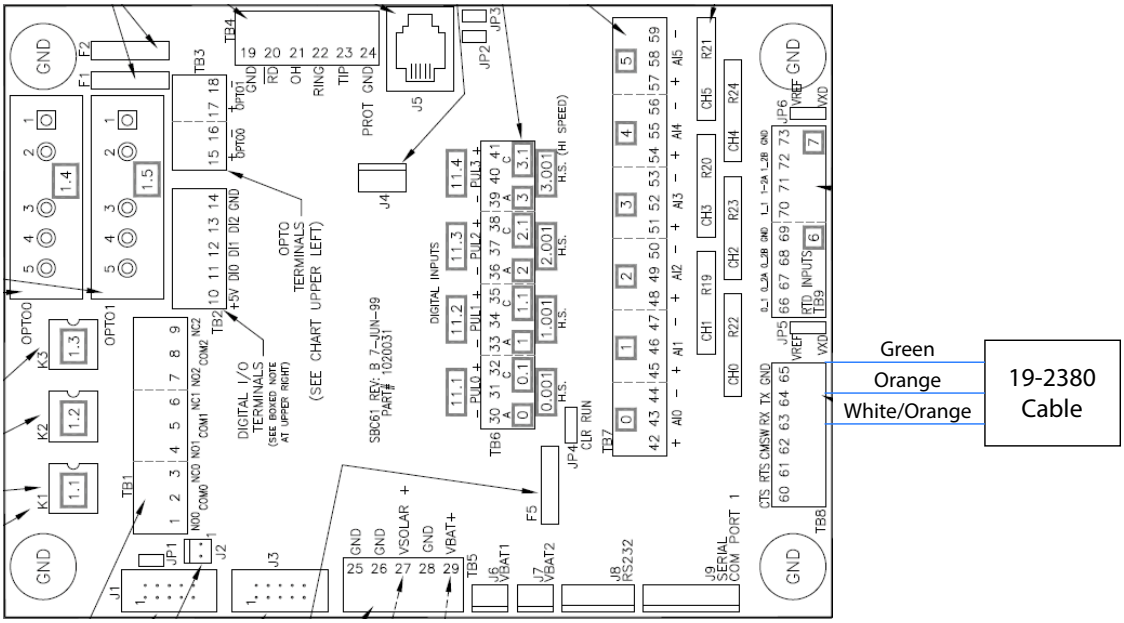

Figure 2 - 8. Serial Connection Wiring Diagram for XARTU Main Board

1. Once the serial leads and drain terminal are connected, close the EVC. Ensure that no cables are hanging between the door and the enclosure.
2. Installation is now complete.

Mercury Cable Entry

All Mercury EVC models will be retrofitted with the PT-board. This will provide the serial communication interface to the GPR2-PT.

Although physically different, each model should have unused cable ports as shown in Figure 2 - 9 through Figure 2 - 11 below.

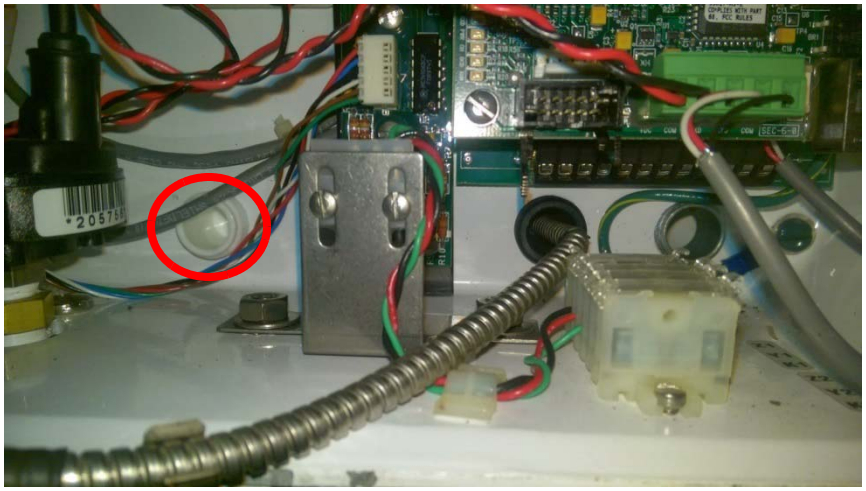

Figure 2 - 9. Mercury ECAT Interior

Figure 2 - 10. Mercury Mini-AT Interior

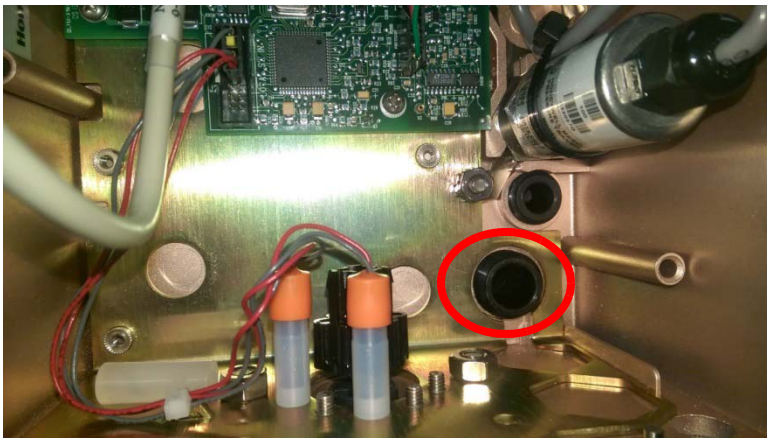

Figure 2 - 11. Mercury Mini-Max Interior

1. Insert serial cable (19-2380) through the appropriate cable port. If the port is filled with a cap, replace with 16-1704 or any similar, water-tight cord grip that will fit a 0.33 inch diameter cable (e.g. Mercury PN 20-8911).
2. Pull the cable through the port far enough to reach the connector and drain hardware.
3. Attach the cable leads into the J4 connector of the PT board (Mercury PN 40-3812) using a small flathead screwdriver to tighten the wires. Use the wiring diagram below.
4. Using a screwdriver or slip joint pliers, attach the drain terminal to an appropriate screw or nut for proper grounding. Some common examples are shown in Figure 2 - 12 through Figure 2 - 13 below.
5. Once the connections are secure, make sure the cord grip is sufficiently tightened on the cable.

Figure 2 - 12. Drain Locations in Mini-AT

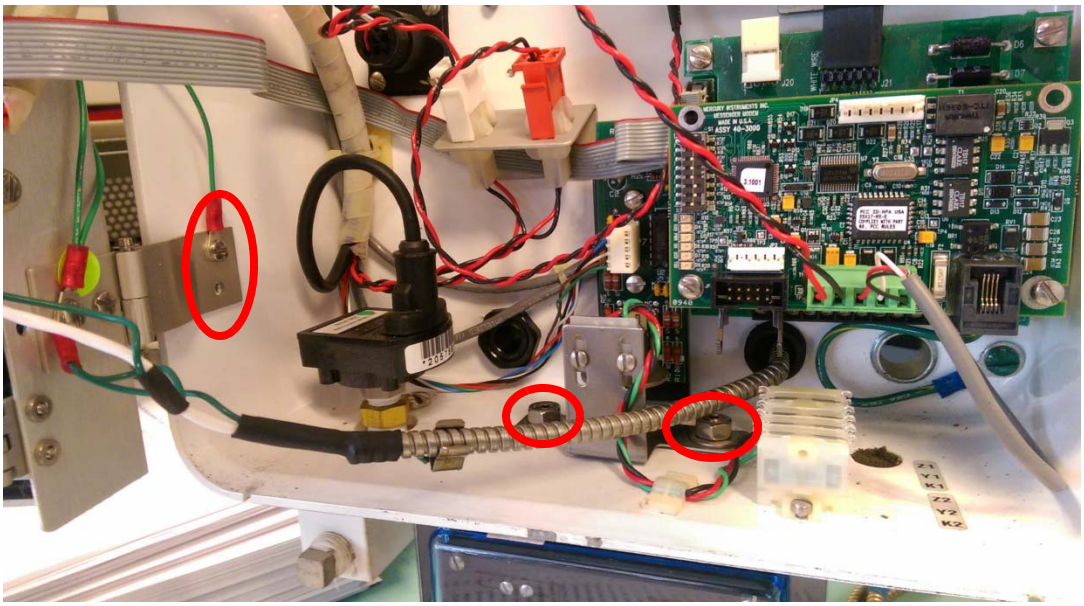

Figure 2 - 13. Drain Locations in ECAT

Serial Connection Wiring Diagram for Mercury/Honeywell Correctors

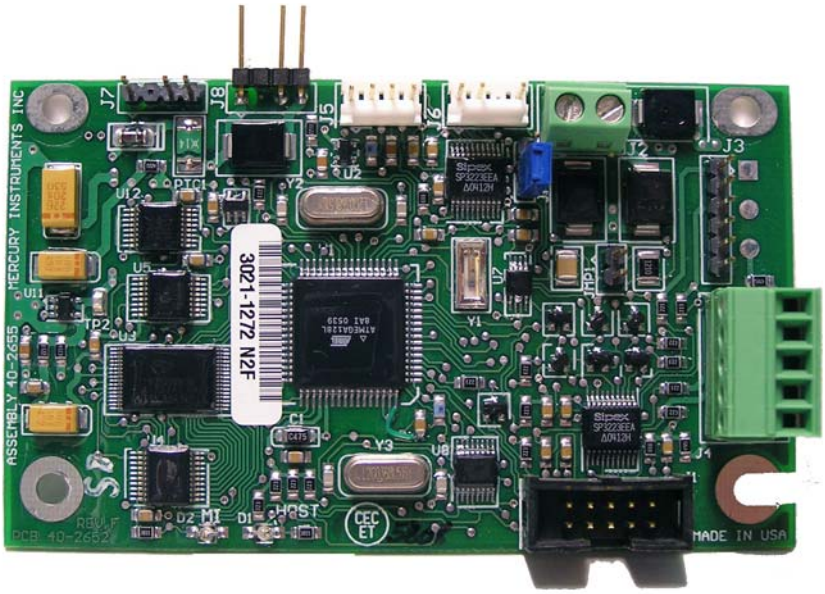

Figure 2 - 14. Protocol (PT) Board

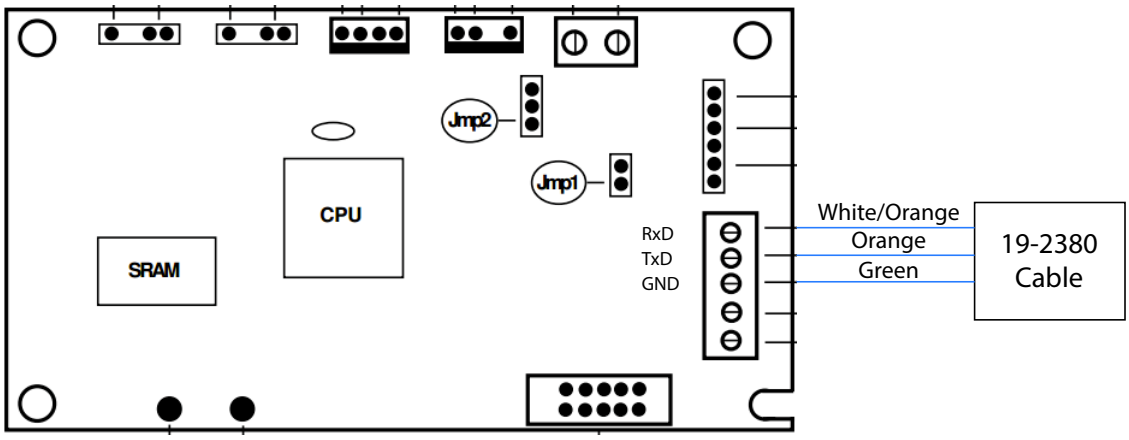

Figure 2 - 15. Serial Connection Wiring Diagram for PT Board

1. Once the serial leads and drain terminal are connected, close the EVC. Ensure that no cables are hanging between the door and the enclosure.
2. Installation is now complete.

Battery Replacement Procedure

1. To change the battery of the GPR2-PT, first take off the cover by removing the 4 screws with a Torx T10 pin-head driver.
2. Unplug the dead battery and detach it from the Velcro. Do not hit the PCBA when removing the battery.
3. Attach the new battery to the Velcro in the same location.
4. Plug the new battery into the same header of the PCBA.
5. Put the cover back onto the enclosure using the same 4 screws with the T10 driver. Torque screws to 13 inch-pounds (± 1 inch-pound).
6. Ensure the gasket tab is inserted into the strain relief slot that holds the serial cable.
7. Battery replacement is now complete.

Corrector Connection

Mercury Corrector (ERX)

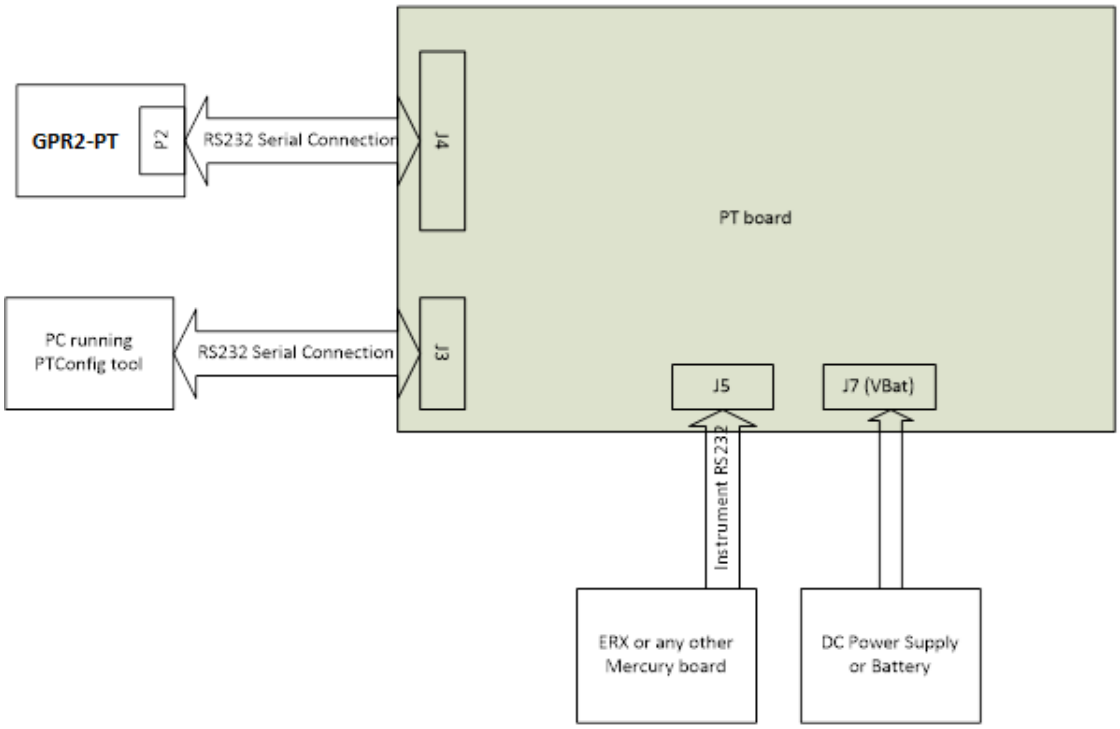

Figure 2 - 16. Mercury Connections Diagram for J5

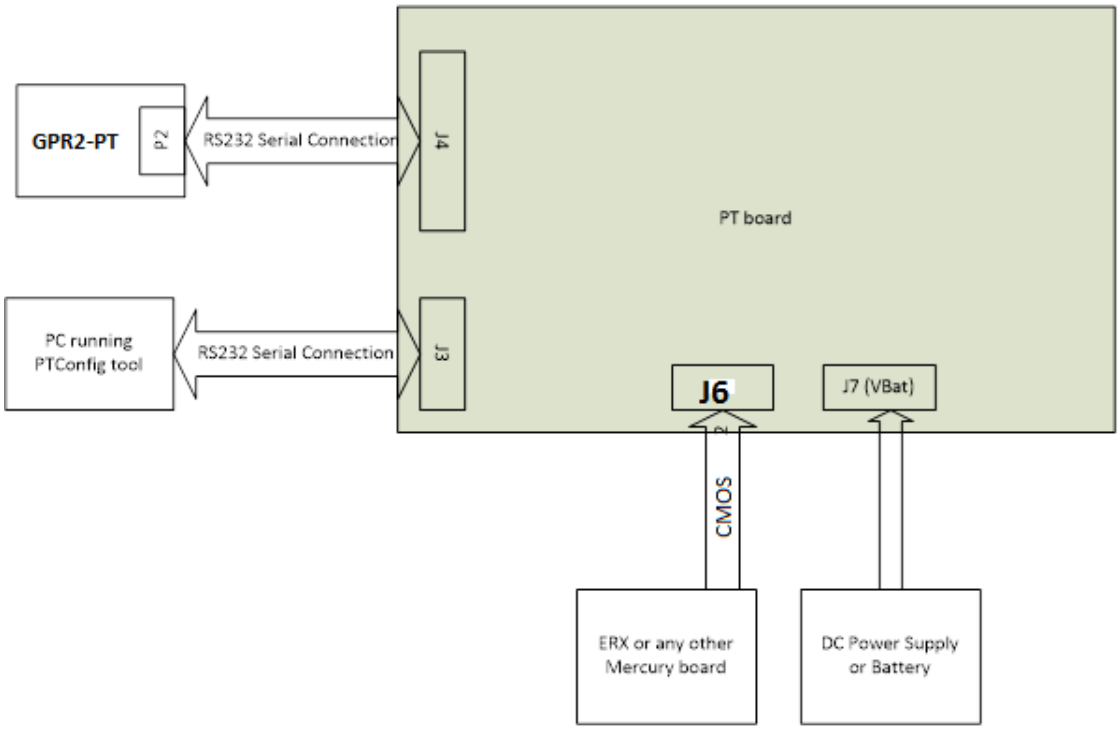

Figure 2 - 17. Mercury Connections Diagram for J6

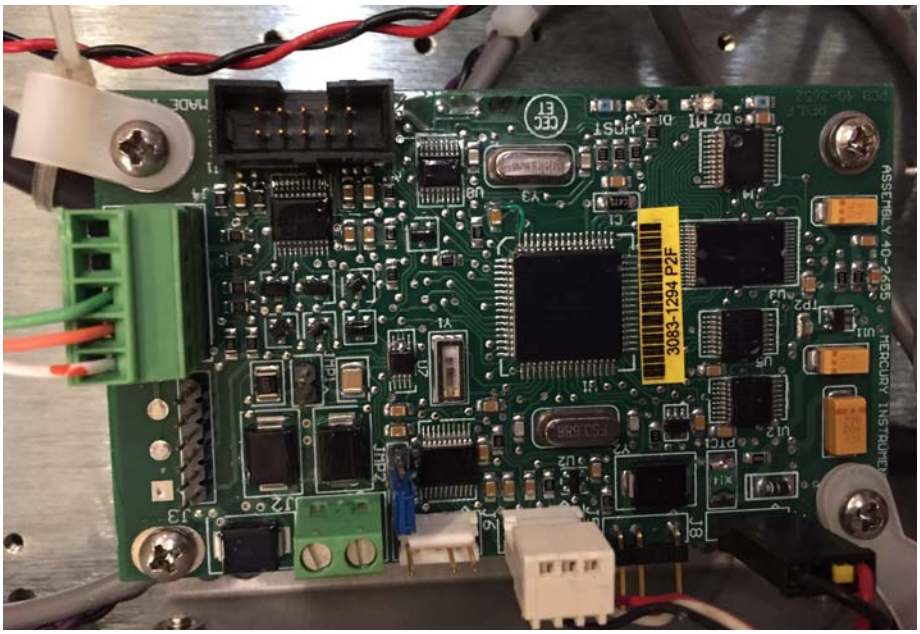

Figure 2 - 18. Mercury Connections

To establish a communication between Corrector and GPR2-PT board, all wires should be connected as described in the diagram from PT board. Mercury's Protocol Translator Configuration software is required to start communication with Corrector from Laptop/PC. Specific MODBUS configuration required to initiate communication between Corrector (PT board) and GPR2-PT board.

Eagle Corrector (XARTU)

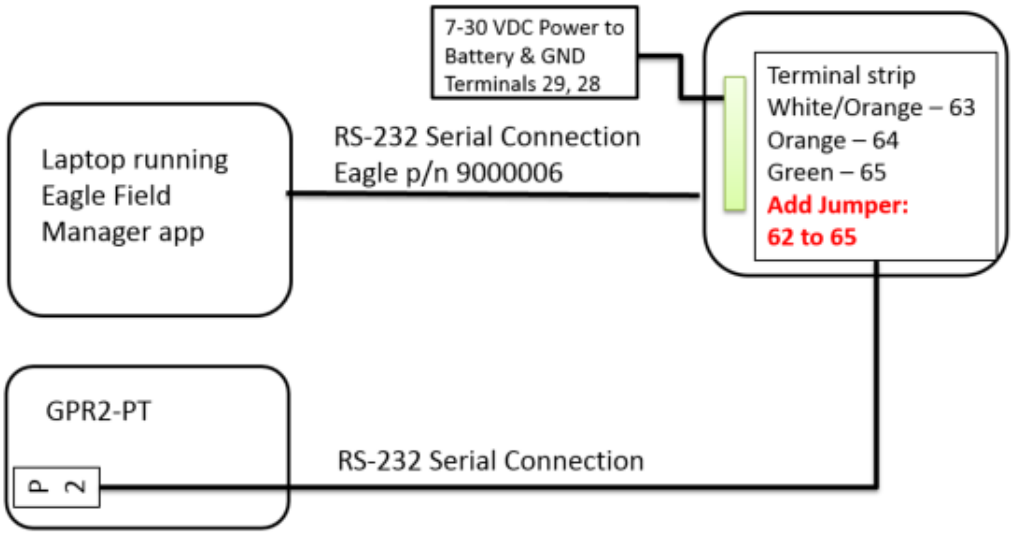

Figure 2 - 19. Eagle Connections Diagram

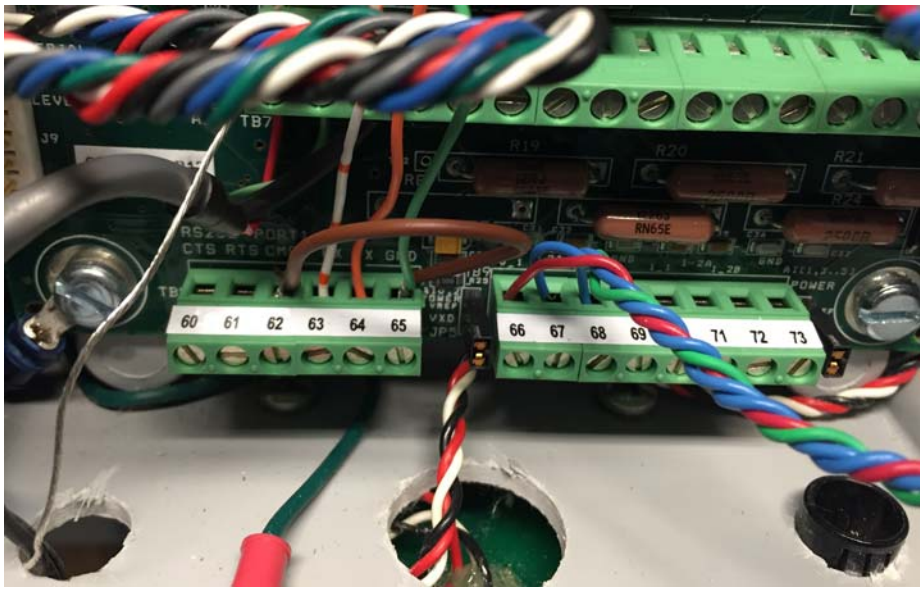

Figure 2 - 20. Eagle Connections

Initial Configuration

To establish a communication between Corrector and GPR2-PT board, all wires should be connected as described in the diagram. Eagle's Field Manager Tool is required to start communication with Corrector from Laptop/PC. Specific MODBUS configuration required to initiate communication between Corrector and GPR2-PT board.

Figure 2 - 21. Serial Cable Must Route Through GPR2-PT Strain Relief Slot

1. Install the GPR2-PT cover using the four security Torx screws included with the GPR2-PT. The cover must be installed with the gasket tab inserted into the strain relief slot located at the bottom left corner of the GPR2-PT enclosure as shown in the following photos.

Figure 2 - 22. GPR2-PT Cover Gasket Tab and Cover Strain Relief Slot

2. Tighten the screws to 13 inch-pounds (± 1 inch-pound).

Figure 2 - 23. GPR2-PT Cover Screws

3. Install tamper seals into the tamper cups that are part of the GPR2-PT cover.

4. Installation is now complete.

A

GPR2-PT Waterproofing

Applying Water Sealant to Circuit Board Connections

CRC Di-Electric Grease Compound is recommended as a sealant to prevent water intrusion into the GPR2-PT Pulse Input and Battery circuit board connections.

Figure A - 1. CRC Di-Electric Grease Compound

NOTE: Novagard® G661 is also approved as an electrical sealant and is available in 5.3 ounce tubes. It has a shelf-life of eighteen (18) months from the date of manufacture, as indicated by the lot number, when stored in the original, unopened container at, or below, 100°F.

Novagard® G661 may be ordered from:

Novagard Solutions®
5109 Hamilton Avenue
Cleveland, OH 44114
Phone: (216) 881-3890 Facsimile: (216) 881-6977
www.Novagard.com

NOTE: Dow Corning 4 Electrical Insulating Compound is approved as an electrical sealant and may be ordered from:

Ellsworth Adhesives

Part #: 4 CMPD 150G TUBE

W129 N10825 Washington Dr.
Germantown, WI 53022
Phone: 1-877-454-9224
Website: http://www.ellsworth.com/Home.html

NOTE: CRC Di-Electric Grease Compound is electrical grade.

1. Liberally apply CRC Di-Electric Grease Compound (“the compound”) to the Battery and GPR2-PT serial connectors as shown in Figure A - 2 and Figure A - 3.

Figure A - 2. Apply the Compound to the Battery Connector

Figure A - 3. Apply the Compound to the GPR2-PT Pulse Input Connector

2. Force the compound between the connector pins with a cotton tipped swab or other suitable applicator as shown in Figure A - 4.

Figure A - 4. Force the Compound between Connector Pins

3. Liberally apply the compound to the connectors of the GPR2-PT serial and battery interface cables. Force the compound into ALL holes and cover ALL electrical contacts, as shown in the following photos.

NOTE: The following photos show representative cables to illustrate compound application.

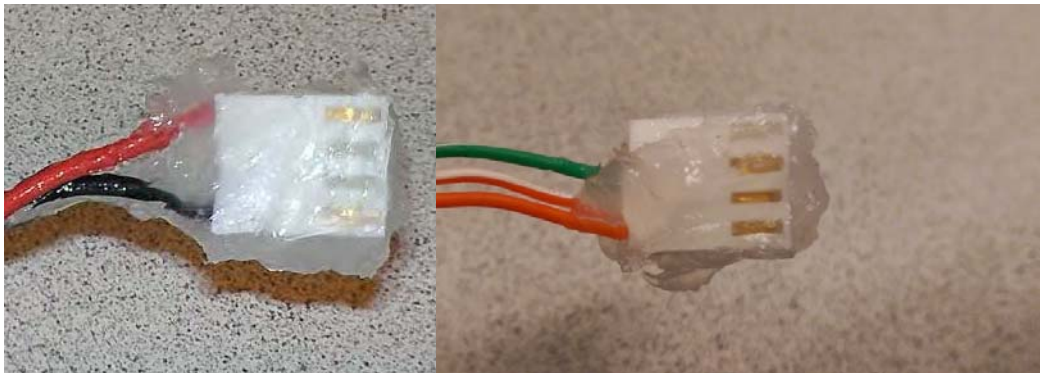

Figure A - 5. Apply the Compound to GPR2-PT Cable Connectors: Cover All Contacts

4. First, install the GPR2-PT serial cable, and then the battery interface cable, onto the GPR2-PT circuit board connectors as shown in Figure A - 6.

WARNING: The GPR2-PT serial cable MUST be installed prior to installing the battery cable. Do NOT disconnect the battery cable after it has been installed. Disconnecting the battery may cause unwanted pulses to be counted by the GPR2-PT. If the battery is disconnected, reprogram the GPR2-PT to clear any unwanted pulse counts, then reconnect the battery.

WARNING: Substitution of components may impair the suitability for Class I, Division 2 applications. Replace battery only with Landis+Gyr part number 40-1235.

5. Liberally apply the compound to the back of each cable connector, forcing the compound into each hole where the wires exit the connectors. The GPR2-PT circuit board and cable connectors must be completely covered as shown in Figure A - 6. A cotton tipped swab may be used to force the compound between each wire and into each connector hole.

NOTE: Battery should not be connected until GPR2-PT is fully mounted.

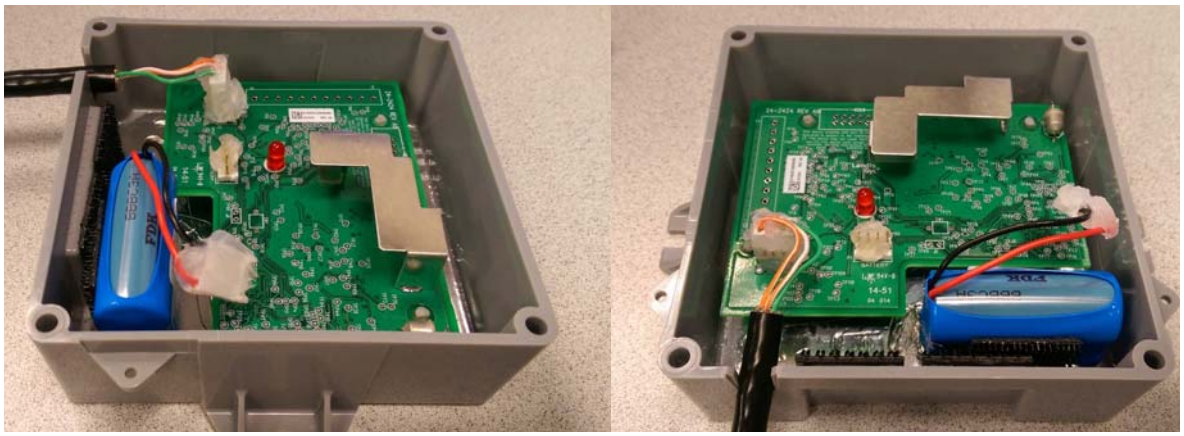

Figure A - 6. The Compound Must Cover Wires and Connectors for Watertight Seal

6. Arrange the GPR2-PT serial and battery interface cables as shown in Figure A - 7. The cables must not interfere with or block the GPR2-PT antenna.

CAUTION: The GPR2-PT serial cable must be inserted into the GPR2-PT enclosure strain relief slot as shown.

NOTE: Battery should not be connected until GPR2-PT is fully mounted.

7. Gently press the cable downward into the strain relief slot as shown in the following figures.

Figure A - 7. Arrange Cables As Shown Before Installing the GPR2-PT Cover

Figure A - 8. GPR2-PT Serial Cable Pressed Into Strain Relief Slot

Ordering Information

CRC Di-Electric Grease Compound

Model: 02085

Description: Di-Electric Grease, Silicone, Net 3.3 oz.

Manufacturer:
CRC Industries Americas Group
885 Louis Drive
Warminster, PA 18974-2869
Phone: (215) 674-4300
Email: info@crcindustries.com
Website: http://www.crcindustries.com/

Novagard® G661 may be ordered from:

Novagard Solutions®

5109 Hamilton Avenue
Cleveland, OH 44114
Phone: (216) 881-3890
Facsimile: (216) 881-6977
www.Novagard.com

Dow Corning 4 Electrical Insulating Compound may be ordered from:

Ellsworth Adhesives

Part #: 4 CMPD 150G TUBE

W129 N10825 Washington Dr.
Germantown, WI 53022
Phone: 1-877-454-9224
Website: http://www.ellsworth.com/Home.html

Cone-Shaped Adhesive Nozzles for Dow 4 Compound may be ordered from:

NOTE: Nozzles listed here have not been tested to verify compatibility with Dow 4 Compound tube threads. Contact each supplier's customer support for additional information.

3M Collision Repair Solutions

3M™ Threaded Cartridge Nozzle Part Number: 08187

UPC: 00051135081877
Stock Number: 60455034698
http://3mcollision.com/products/tools/applicators-and-accessories/3m-threaded- cartridge-nozzle-08187.html

3M Distributors

http://3mcollision.com/dealers/search?zip=30022&lat=34.029613&lng=- 84.23841700000003

DKHardware.com

Phone: 877-509-8040
CRL Screw-On Uncut Standard Urethane Nozzle
Item # UN0Z
http://www.dkhardware.com/product-11007-un0z-screw-on-uncut-standard-urethane- nozzle.html

Ellsworth Adhesives

W129 N10825 Washington Dr.
Germantown, WI 53022
Phone: 1-877-454-9224
Website: http://www.ellsworth.com/Home.html

- Sika Nozzle - Uncut
- Part #: A4006P - 189429
- Description: Uncut nozzle for adhesive dispensing

Sold as pack (6/pack)

http://www.ellsworth.com/display/productdetail.html?productid=1453&Tab=Vendors

- Sika Nozzle - Threaded Cone
- Part #: 883970 - 169853
- Description: Threaded cone nozzle for adhesive dispensing

Sold as pack (6/pack)

http://www.ellsworth.com/display/productdetail.html?productid=1443&Tab=Vendors

B

Installation in Hazardous Locations

Information

The following information describes and limits what can be attached to the GPR2-PT in a Division 1 location per the UL certification.

1. GPR2-PT Entity Parameters:
   - Uo (Voc) = 6.3 V dc
   - Io (Isc) = 7.34 A
   - Po = 5.91 W
   - Co (Ca) = 207 uF
   - Lo (La) = 43 uH
2. The output current of the GPR2-PT is limited by a resistor such that the output voltage-current plot is a straight line drawn between open-circuit voltage and short-circuit current.
3. Selected intrinsically safe equipment must be third party listed as intrinsically safe for the application, and have intrinsically safe entity parameters conforming to Table B - 1 below.

Table B - 1. Conforming Safety Parameters

I.S Equipment		GPR2-PT
Ui (or V max)	or	6.3 V dc
Ii (or I max)		7.34 A
Pi (or P max)		5.91 W
Ci + Ccable		207 uF
Li + Lcable		43 uH

4. This associated apparatus may also be connected to simple apparatus as defined in Article 504.2 and installed and temperature classified in accordance with article 504.10(B) of the National Electrical Code (ANSI/NFPA 70), or other local codes, as applicable. The GPR2-PTs described in this guide qualify as simple apparatus for the purposes of intrinsic safety.
5. Capacitance and Inductance of the field wiring from the intrinsically safe equipment to the GPR2-PT shall be calculated and must be included in the system calculation as shown in Table B - 1. Cable capacitance, Ccable, plus intrinsically safe equipment capacitance, Ci must be less than the marked capacitance, Ca (or Co), shown on any associated apparatus used. The same applies for inductance (Lcable, Li and La or Lo, respectively). Where the cable capacitance and inductance per foot are not known, the following values shall be used: Ccable=60pF/ft., Lcable= 0.2 uH/ft. The total capacitance and inductance of each I.S. device and associated cable is to be added together and cannot exceed the stated Co and Lo values.

6. Where multiples circuits extend from the GPR2-PT, they must be installed in separate cables or in one cable having suitable installation. Refer to Article 504.30(B) of the National Electrical Code (ANSI/NFPA 70) and Instrument Society of American Recommended Practice ISA RP12.6 for installing intrinsically safe equipment.
7. Intrinsically safe circuit must be wired and separated in accordance with Article 504.20 of the National Electrical Code (ANSI/NFPA 70) or other local codes, as applicable.
8. The GPR2-PT has not been evaluated for use by UL in combination with another associated apparatus.