Excellence in Compliance Testing

Certification Exhibit

FCC ID: R7PEG1R1S2

FCC Rule Part: 15.247

ACS Project Number: 12-0341

Manufacturer: Landis+Gyr Technology, Inc.
Model: Gridstream RF Enhanced Integrated Focus AX

Manual

5015 B.U. Bowman Drive Buford, GA 30518 USA Voice: 770-831-8048 Fax: 770-831-8598

Gridstream RF Enhanced Integrated FOCUS AX Quick Start Guide

Publication: 98-1033 Rev AB

LANDIS+GYR CONFIDENTIAL INFORMATION

Limitation on Warranties and Liability

Information in this document is subject to change without notice. This manual or any part of it thereof may not be reproduced in any form unless permitted by contract or by written permission of Landis+Gyr.

In no event will Landis+Gyr be liable for any incidental, indirect, special, or consequential damages (including lost profits) arising out of or relating to this publication or the information contained in it, even if Landis+Gyr has been advised, knew, or should have known of the possibility of such damages.

© 2010 Landis+Gyr, Inc. All Rights Reserved

Gridstream RF Enhanced Integrated FOCUS AX Quick Start Guide

98-1033 Rev AA

Revision History			
Modification Date	**Revision**	**Description**	**Author**
09/15/2010	AA	Released Internally	Kim Utesch
04/21/2011	AB	Pending	Kim Utesch

Landis+Gyr
6436 County Road 11
Pequot Lakes, MN 56472
Website: www.landisgyr.com
E-mail: solutionsupport.na@landisgyr.com
Technical Support: 1-888-390-5733

Copyright© 2010 Landis+Gyr, Inc.

All rights reserved.

Gridstream RF Enhanced Integrated FOCUS AX Quick Start Guide

Overview

The Gridstream RF Enhanced Integrated FOCUS AX module is an integrated solution with FOCUS AX advanced metering electronics the Gridstream AMR communication electronics combined together on a single PCB. It uses field-proven Digital Multiplication Measurement Technique to ensure a highly accurate load performance and dependability during the entire life of the product. It also offers a Service Disconnect option and ZigBee connectivity for HAN applications.

Figure 1. Gridstream RF Enhanced Integrated FOCUS AX module and the Landis+Gyr FOCUS AX meter

This communication module is not available as a stand alone product. To order a Gridstream RF Enhanced Integrated FOCUS AX endpoint, the Landis+Gyr kit number is 40-1284 (with ZigBee).

Required Software

To work with the endpoint, you need one of the following software tools:

- Command Center version 5.0 or later
- RadioShop version 5.0 or later
- Endpoint Testing Manager version 4.0 or later

About the LAN ID

The LAN ID is a unique identifier for each Gridstream RF endpoint. It is always displayed in hex. Landis+Gyr provides the LAN address. You cannot change the LAN ID of a radio.

HAN Support

The Gridstream RF Enhanced Integrated FOCUS AX communication module supports an integrated ZigBee system on the chip. This enables the endpoint to communicate via Smart Energy Profile 1.0 with other ZigBee enabled devices.

Endpoint Registration with Command Center

Communication module firmware version 6.x or later and module Device Control Word (DCW) 1A01.06.05 or later is required for auto-registration. After the endpoint is installed in the field it will automatically register with the Head End System. No special tools are needed during installation as the normal Utility meter swap process can be utilized.

The meter automatically sends in the registration information containing items on how the meter/endpoint is configured so the host can properly interpret the incoming data. Some of the items contained in this are as follows:

- Default collector/destination
- Reporting interval for Register Data
- Reporting interval for Interval Data
- Meter's AMR-level security password
- Time Synchronization parameters
- GMT offset
- Periodic Register Data reporting
- Periodic LP Data reporting
- Meter configuration information

Once this information has been sent the endpoint starts collecting and sending based on the default configuration loaded during manufacturing.

Retrieving Data

The endpoint is capable of delivering data via an On Request Read (ORR) or autonomously (periodically reported).

Availability of the following features depends on meter configuration. On Request Reads (ORR) available with this endpoint are:

- Register Data (Standard Table 23) which includes consumption, demand and TOU values
- Load Profile or Interval Data (Standard Table 64)
- Revenue Integrity Services which includes instantaneous measurements related to line voltage, current and phase angle

Availability of the following features depends on meter configuration. Options for periodic reported data with this module include:

- Register Data & Status Flags (Standard Tables 23 & 3) which includes consumption, demand, TOU values and meter status
- Load Profile or Interval Data & Status Flags (Standard Tables 64 & 3) which includes interval data and meter status

Demand Reset

When the Command Center Host delivers a Demand Reset command, the communication module passes the command to the meter, which performs the Demand Reset on the meter. The endpoint then passes the previous demand data captured by the meter (Standard Table 25) to the Host for processing.

Time Synchronization

Time synchronization is the process of keeping the meter time synchronized with the Gridsteam RF network time within a configurable limit. The communication module automatically keeps its time synchronized with the Gridstream RF network via periodic background process. The communication module reads the meter date/clock table (Standard Table 52) at 1:23 AM. If the time drift between meter and communication module exceeds the minimum time threshold, X, it sends a time synchronization alert message to the Host so it knows that an adjustment was made automatically for XX seconds. If the time is off by more than Y seconds, an alert is sent saying the time off exceeds allowed seconds and that further manual action will be required to correct.

Power Outage/Restoration

When an outage occurs, the meter uses an early power failure signal to alert the communication module to disconnect from the meter's power immediately. The communication module saves critical module data to non-volatile memory and creates and sends a power outage message. This message includes the following information:

- LAN ID
- Outage time
- Reboot count.

The communication module sends the message, then assists with routing other packets until the back-up energy source can no longer keep the radio alive.

When power is restored, the communication module connects with the network. With network communications restored, the communication module sends a power restoration message that includes details such as:

- LAN ID
- Outage time
- Restoration time
- Reboot count.

The communication module stores a history of up to the last five power outage and restoration event pairs in the event log. The Host can request this data.

Supporting Passwords

The endpoint supports passwords provided by the utility. See two way Endpoint Testing Manager for loading password into the communication module.

Downloading Firmware

The metrology, communication module and ZigBee firmware can be upgraded remotely over the network. Both the communication module and ZigBee firmware can remotely initiate a self-restart with communications enabled, if the downloaded firmware causes a catastrophic functional failure. Once the endpoint completely receives the new code, it operates with the new code. The metrology and communication module firmware are integrated and must be updated simultaneously.

Encrypting Data

The Gridstream RF network currently supports use of one encryption key per network. If you enable the FOCUS AX with encryption, the host must have a matching encryption key.

Configuration Tables

The Gridstream RF Communication Module Configuration structure passes the data to configure the endpoint. It is used for both C&I and Residential applications.

This table is currently 55 bytes long. It contains information necessary to configure several services on the endpoint, such as firmware reads, autonomous data return configuration.

The endpoint receives the packet, and using the data, configures its own operation. The host maintains a record of the endpoint's configuration.

Item	General Description
Packet Contents	Identifies which elements in this packet are set. Elements that are not set are ignored. There still must be a place in the packet for it, though.
Config Byte 1	Not used.
Config Byte 2	Not used.
Config Byte 3	Not used.
Config Byte 4	Not used.
Config Byte 5	Not used.
Reporting Interval LP	In Minutes.
Pump Period Register	In Minutes.
Pump Period RIS	Not used.
Pump Period Status	Not used.

Item	General Description
Pump Period Snap Read	Not used.
User ID	2 byte User ID used while running ANSI Logon Service
Logon User	10 byte User Name that is used while running the ANSI Logon Service
Security Password	The full 20 bytes are required for the FOCUS AX.
Sustained Outage Duration	Defines the number of seconds after which an outage will be classified as sustained. If less than this amount, the outage is momentary. A value of zero will cause all outages to be considered "sustained".
Max Meter Time Drift	The number of seconds that the meter clock can drift from the radio clock, after which an alarm is triggered.
Meter Time Read Period	The period at which the module checks the time in the meter. In Seconds
GMT Offset	The GMT Offset in 15 minute increments. Signed. Valid values are -128 (0x80), corresponding to GMT-32hours to +127 (0x7F), corresponding to GMT+ 31hours

Troubleshooting

Contact Landis+Gyr Customer Support at solutionsupport.na@landisgyr.com or call 888-390-5733 with any questions or problems, and they will guide you through the troubleshooting process.

Shock Hazard

Beware of hazardous electrical voltages. Do not touch the board or any external connections, such as the antenna, when the meter board is powered up.

Compliance

FCC Class B

This device complies with Part 15 of the FCC rules. Operation is subject to the following two conditions:

(1) This device may not cause harmful interference, and

(2) This device must accept any interference received, including interference that may cause undesired operation.

This equipment has been tested and found to comply with the limits for a Class B digital device, pursuant to Part 15 of the FCC Rules. These limits are designed to provide reasonable protection against harmful interference in a residential installation. This equipment generates, uses, and can radiate radio frequency energy and, if not installed and used in accordance with the Instructions, may cause harmful interference to radio communications. However, there is no guarantee that interference will not occur in a particular installation. If this equipment does cause harmful

interference to radio or television reception, which can be determined by turning the equipment off and on, the user is encouraged to try to correct the interference by one or more of the following measures:

- Reorient or relocate the receiving antenna.
- Increase the separation between the equipment and receiver.
- Consult Landis+Gyr or an experienced radio technician for help

WARNING: Changes or modifications to this device not expressly approved by Landis+Gyr could void the user's authority to operate the equipment.

RF Exposure

In accordance with FCC requirements of human exposure to radio frequency fields, the radiating element shall be installed such that a minimum separation distance of 20 centimeters will be maintained.

Specifications

Category	Specification	Value or Range			
Compatible Meters	Landis+Gyr FOCUS Supported Meter Forms	Form	Class	Voltage	Units
		1S&SD	CL100	120	Vac
		2S&SD	CL200	240	Vac
		2SE	CL320	240	Vac
		3S	CL20	120	Vac
		3S	CL20	240	Vac
		4S	CL20	240	Vac
		Only 1S and 2S are available with Service Disconnect			
Gridstream Radio General	RF Frequency Range	902.2 MHz Min, 927.9 MHz Max			
	RF Baud Rate	9.6 kbps Min, 115.2 kbps Max, Programmable			
	Output Power	25.25 kBm Min, 26.25 dBm Typ, 27.25 dBm Max. Over temperature range, <2:1 VSWR load			
	Receive Sensitivity	-112 dBm Min, -102 dBm Max, At 10% PER, depends on baud rate			
	Antenna Type	Inverted F, Printed			
	Antenna Gain	+3 dbi, Peak Gain			

Category	Specification	Value or Range
ZigBee Radio General	RF Frequency Range	2.405 GHz Min, 2.475 GHz Max
	RF Baud Rate	250 kbps Typ
	Output Power	17 dBm Min, 20 dBm Typ, 21 dBm Max, <2:1 VSWR load, approx.
	Receive Sensitivity	-106 dBm Min, -104.5 dBm Typ, -102 dBm Max. At 1% PER
	Antenna type	Inverted F, Printed
	Angenna Gain	+5 dBi, Peak Gain
Standards Compliance	FCC Title 47 CFR Part 15	Radiated and Conducted Emissions (incl. intentional radiators)
	IEC 61000 4-2,3,4,5, 6, 8, 9, 11	Electromagnetic Compatibility
	ANSI C12.20	National Standard for Electricity Meters - 0.2 and 0.5 Accuracy Classes
	ANSI C12.1	Code for Electricity Metering
	ANSI C37.90.1 (1989)	Standard Surge Withstand Capability (SWC) Tests
Mechanical	Size	5.5” L x 5.0” W x 1.5” H
	Weight	48.2 g
Environmental	Storage Temperature	-40 to +85 C
	Operating Temperature	-40 to +85 C (under meter cover)
	Relative Humidity	5 to 95% relative humidity, non-condensing

Gridstream
RF Electric Endpoint
Fix-up Antenna
Installation Guide

Publication: 98-1245 Rev AA

LANDIS+GYR CONFIDENTIAL INFORMATION

Limitation on Warranties and Liability

Information in this document is subject to change without notice. This manual or any part of it thereof may not be reproduced in any form unless permitted by contract or by written permission of Landis+Gyr.

In no event will Landis+Gyr be liable for any incidental, indirect, special, or consequential damages (including lost profits) arising out of or relating to this publication or the information contained in it, even if Landis+Gyr has been advised, knew, or should have known of the possibility of such damages.

All brands and product names are the trademarks or registered trademarks of their respective holders.

© 2013 Landis+Gyr, Inc. All Rights Reserved

Gridstream RF Electric Endpoint Fix-up Antenna Installation Guide			
Publication: 98-1245			
Revision History			
Modification Date	**Revision**	**Description**	**Author**
3/26/2013	AA	Released	Vicky Costello
Landis+Gyr 30000 Mill Creek Avenue Alpharetta, GA 30022 Website: www.landisgyr.com E-mail: solutionsupport.na@landisgyr.com Technical Support: 1-888-390-5733	© 2013 Landis+Gyr All rights reserved.		

Gridstream RF Electric Endpoint Fix-up Antenna Installation Guide

Overview

This publication outlines the procedure for remote passive antenna installation on Gridstream RF Electric Endpoints.

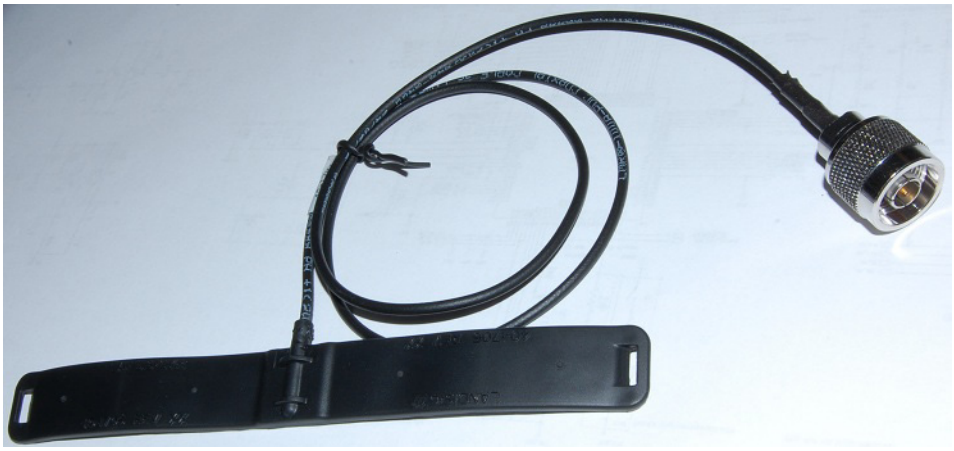

Figure 1. Remote Passive Antenna

This antenna couples radio frequency energy from a Landis+Gyr Gridstream RF Electric Endpoint's 902-928 MHz antenna into a coax cable connected to a remote antenna located at an optimal location for better connection to the Gridstream RF network. Coupling loss (including the 2.5 ft. cable) ranges from 5 to 9 dB, with 5 being a typical value. Environmental performance is rated for: 0 to 95% relative humidity, -40 to +85° C.

Coupler Part Numbers

The same coupler is used for all remote antenna installations. The part number and description is as follows:

- 40-1705 flex loop, 2.5 ft. antenna cable, cable tie, adhesive

In the case where the length above is insufficient, Landis+Gyr recommends the extension cable listed below, terminated with a female “N” connector on one end and a male “N” connector on the other:

- 19-1742, extension cable, 20 ft.

Required Materials

The following materials are required to complete a remote antenna installation.

- Alcohol wipes
- RTV - Part Number 30-0109, Dow Corning #839
- Cold flow sealing tape
- Hardware, appropriate to installation
- 45-1221, Kit, Antenna (consisting of items listed below)
  - 106119-000 Remote Antenna, 5dBi Whip
  - 28-1012, Antenna Ground Plane
  - 16-0214: Barrel Connector N-Female to N-Female, “Bulkhead”

List of Terms

The following is a list of terms used to identify remote antennas and related equipment.

Coupling Antenna

This is the flexible circuit that is at the end of the antenna assembly. It is referred to interchangeably as the flex circuit, flex dipole, patch antenna, coupler, and so on.

Remote Antenna

Refers to the omni whip antenna which will be “remoted” from the coupling antenna. The remote antenna is ideally mounted “line of sight” to the Gridstream RF Mesh network.

Optional Materials

The following items may be required, depending on the installation.

- 22-1542: Grommet, 1.25” OD, 1.0” ID with 0.25” center hole
- Mounting brackets, Landis+Gyr part numbers:
  - 28-1800: Bracket, antenna, meter box, right
  - 28-1801: Bracket, antenna, meter box, left
  - 28-1802: Bracket, antenna, ceiling mount
  - 28-1804: Bracket, antenna, wall, flat

Tools

The following tools may be required, depending on the installation.

- Flat head screwdriver
- Utility knife
- Battery-operated drill with 5/8- and 1-inch high speed metal bits
- Phillips head screwdriver
- Wire cutters
- Tape measure

Performance

Table 1. Performance

Parameter	Minimum	Typical	Maximum	Units	Condition
Frequency	902		928	MHz	
Coupling Loss		5	9	dB	
Polarization		Linear			
VSWR		1.78:1			Final antenna assembly on FOCUS AX: modular
Impedance		50		ohm	
Input RL		11		dB	Final antenna assembly on FOCUS AX: modular

General Installation Guidelines

Determine the optimum location for remote antenna installation. This will vary depending on the location of the meter. In general, the antenna should be:

- Installed as close to line of sight with a Gridstream RF network equipment as is possible.
- Mounted so that it is at least four inches from the nearest structure.
- Mounted so that a meter box cover, if the endpoint is enclosed in one, can be removed without interference from the remoted antenna.
- For inside-premise installations, remoted antennas may be mounted in the proximity of an available window, or may need to be routed to the outside if the signal strength is insufficient.
- Mounted so that the antenna connector is OUTSIDE the meter box. A 1-inch hole should be drilled in the meter box so that the connector can be fed through the box. Use the appropriate mounting bracket to mount the antenna external to the meter box.
- Mounted so that any length of additional cable is minimized. The best practice for maximum cable length is to not exceed line loss (refer to cable manufactures line loss chart) vs. gain of antenna, the RF link loss by use of passive antenna can be excluded from the line loss calculation.

It is the responsibility of local installation organizations to ensure that local wiring codes and requirements are met, including the application of a safety ground, when required.

NOTE: This device and the supplied installation components are UV-resistant.

Gridstream RF Enhanced FOCUS AX/AX-SD Mounting Procedure

NOTE: The passive antenna should be mounted within 5 mm (0.25") of the indicated location to achieve specified performance.

1. Clean the meter cover where the flex antenna will be installed. Wipe the cover mounting area with an alcohol wipe and let the area dry for one minute before proceeding with the installation.
2. Peel the paper backing off of the adhesive tape (bottom of coupling antenna).
3. ***Firmly press the center of the antenna to the bottom (6 o'clock position) of the meter while aligning the lower/left of center edge of the antenna with the lower edge of the window on the inner meter housing.***
4. Wrap the cable tie through and over antenna guides, and around the meter. Thread the cable tie into the mating end of itself.

Figure 2. Antenna Guides

5. Ensure that the cable tie is evenly placed over the antenna and cinch tight.
6. Install the remote antenna at the location indicated by the link assessment performed. If a link assessment tool is not available, select a location that provides the best line of sight to the nearest collector.
7. Once installed to the antenna, wrap the connector using cold flow tape. Tape should be wrapped tightly and in a continuous manner. The tape should cover the cable one inch past the end of the connector.
8. Secure the cable to the side of the structure using appropriate hardware for the building construction.

Cable Tie

Align the lower edge of the antenna with the lower edge of the bottom window on the inner meter housing, with the antenna center point as shown.

Figure 3. Installation On FOCUS AX/AX-SD Meters

Gridstream RF Enhanced S4e Mounting Procedure

NOTE: The passive antenna should be mounted within 5 mm (0.25") of the indicated location to achieve specified performance.

1. Clean the meter cover where the flex antenna will be installed. Wipe the cover area with an alcohol wipe and let the area dry one minute before proceeding with the installation.
2. Peel the paper backing off of the adhesive tape (bottom of coupling antenna).
3. ***Firmly press the center of the antenna onto the meter housing at the 2:30 o'clock position, 1.5 cm clockwise past the nub on the outer meter cover. Align the top edge of the antenna with the texture line on the S4e meter housing.***
4. Wrap the cable tie over and through the antenna guides, and around the meter. Thread the cable tie into the mating end of itself.

Figure 4. Antenna Guides

5. Ensure that the cable tie is evenly placed over the antenna and cinch tight.
6. Install the remote antenna at the location indicated by the link assessment performed. If a link assessment tool is not available, select a location that provides the best line of sight to the nearest collector.
7. Once installed to antenna, wrap the connector using cold flow tape. Tape should be wrapped tightly around the cable and in a continuous manner. The tape should cover the cable one inch past the end of the connector.
8 Secure the cable to the side of the structure using appropriate hardware for the building construction. See Figure 5 on page 8.

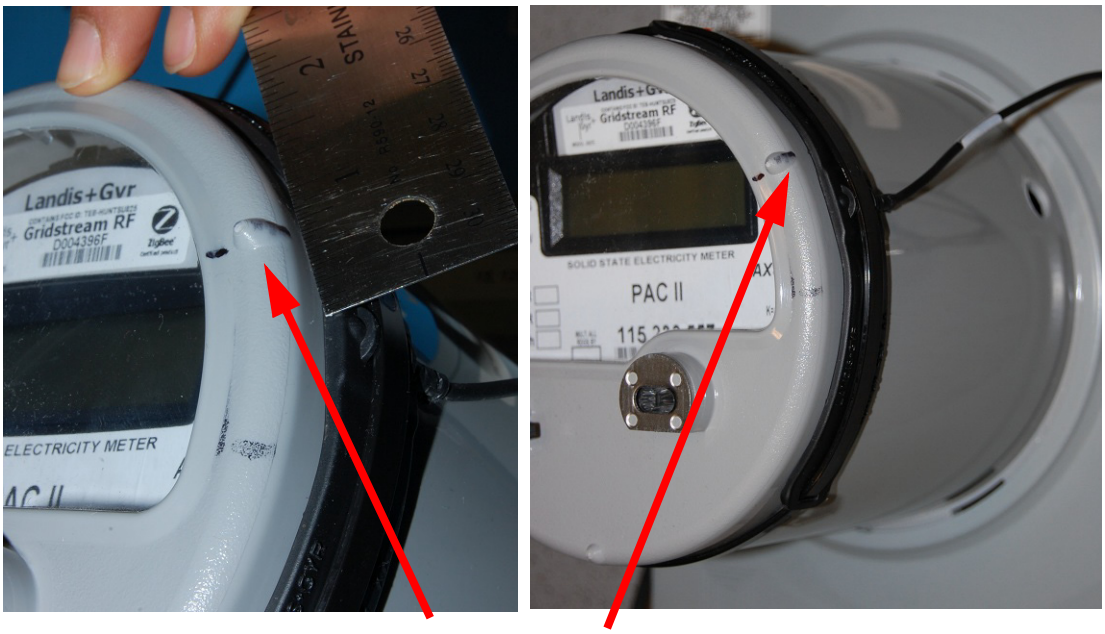

Align the antenna center point on the meter housing at the 2:30 o'clock position, 1.5 cm clockwise past the nub on the outer meter cover

Figure 5. Installation On Gridstream RF Enhanced S4e Meters

Gridstream RF Integrated FOCUS AX/AX-SD Mounting Procedure

NOTE: The passive antenna should be mounted within 5 mm (0.25") of the indicated location to achieve specified performance.

1. Clean the meter cover where the flex antenna will be installed. Wipe the cover mounting area with an alcohol wipe and let the area dry for one minute before proceeding with the installation.
2. Peel the paper backing off of the adhesive tape (bottom of coupling antenna).
3. ***Firmly press the center of the antenna to the 5 o'clock position of the meter while positioning the upper edge of the antenna 3.3 cm below the top surface of the meter cover.***
4. Wrap the cable tie through and over antenna guides, and around the meter. Thread the cable tie into the mating end of itself.

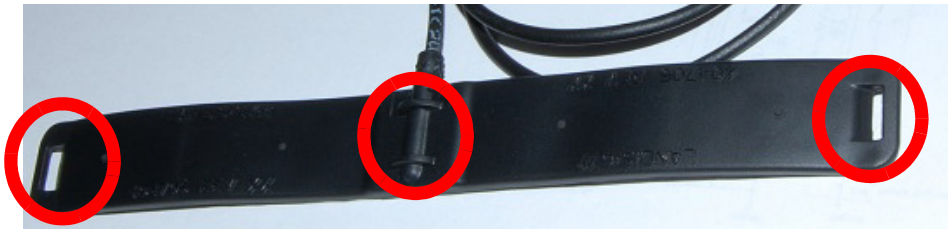

Figure 6. Antenna Guides

5. Ensure that the cable tie is evenly placed over the antenna and cinch tight.

6. Install the remote antenna at the location indicated by the link assessment performed. If a link assessment tool is not available, select a location that provides the best line of sight to the nearest collector.
7. Once installed to the antenna, wrap the connector using cold flow tape. Tape should be wrapped tightly and in a continuous manner. The tape should cover the cable one inch past the end of the connector.
8. Secure the cable to the side of the structure using appropriate hardware for the building construction.

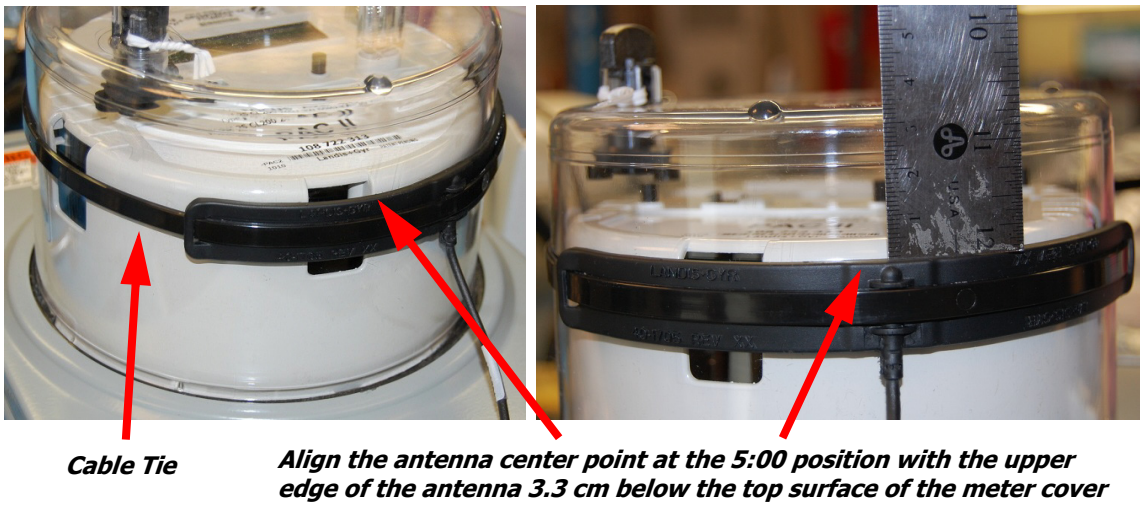

Figure 7. Installation On FOCUS Integrated AX/AX-SD Meters

Antenna Brackets and Antenna Mounting

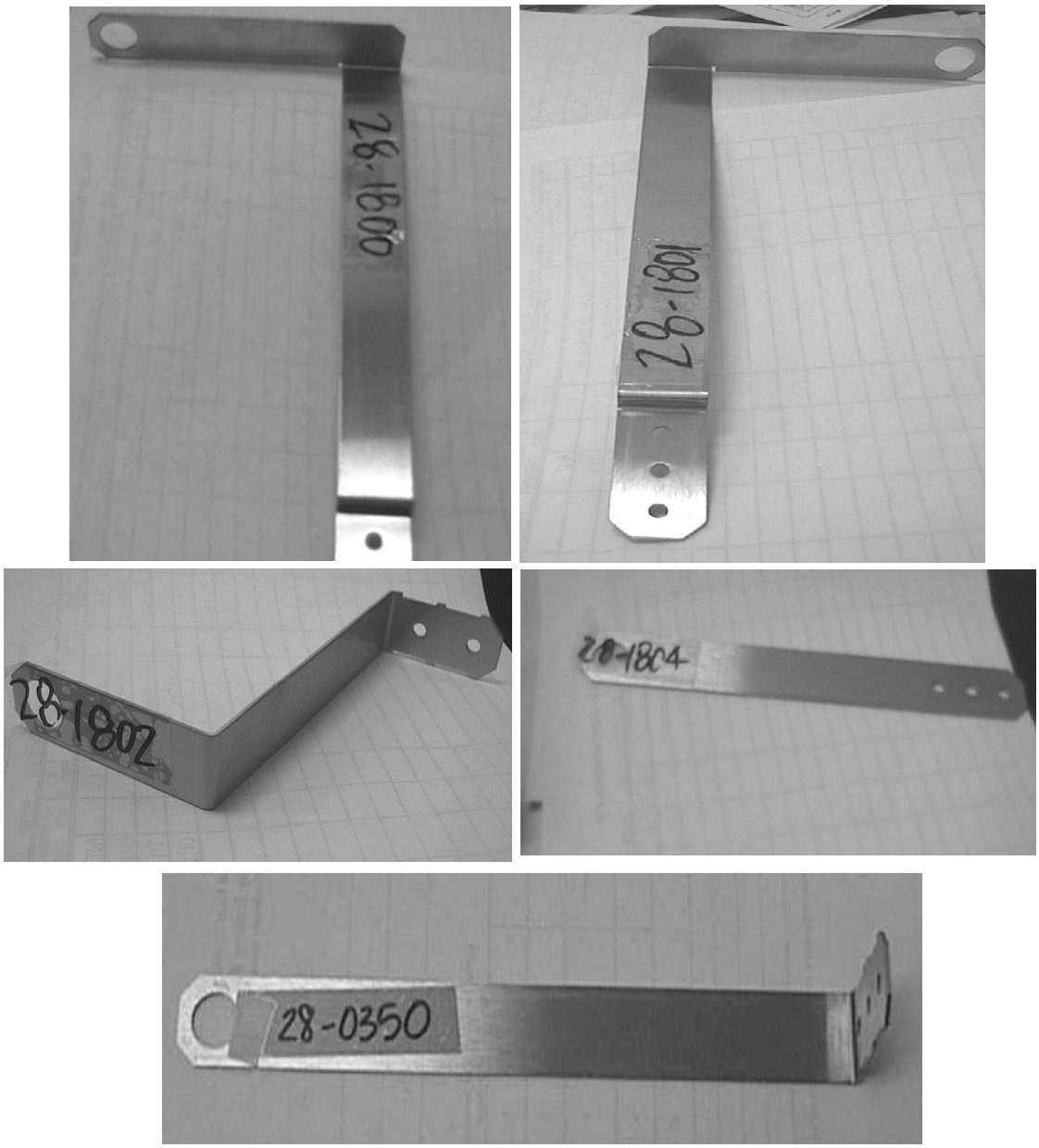

Figure 8. Typical Remote Antenna Brackets

NOTE: To mount these brackets, use screw and bolt hardware that is approved by the local utility.

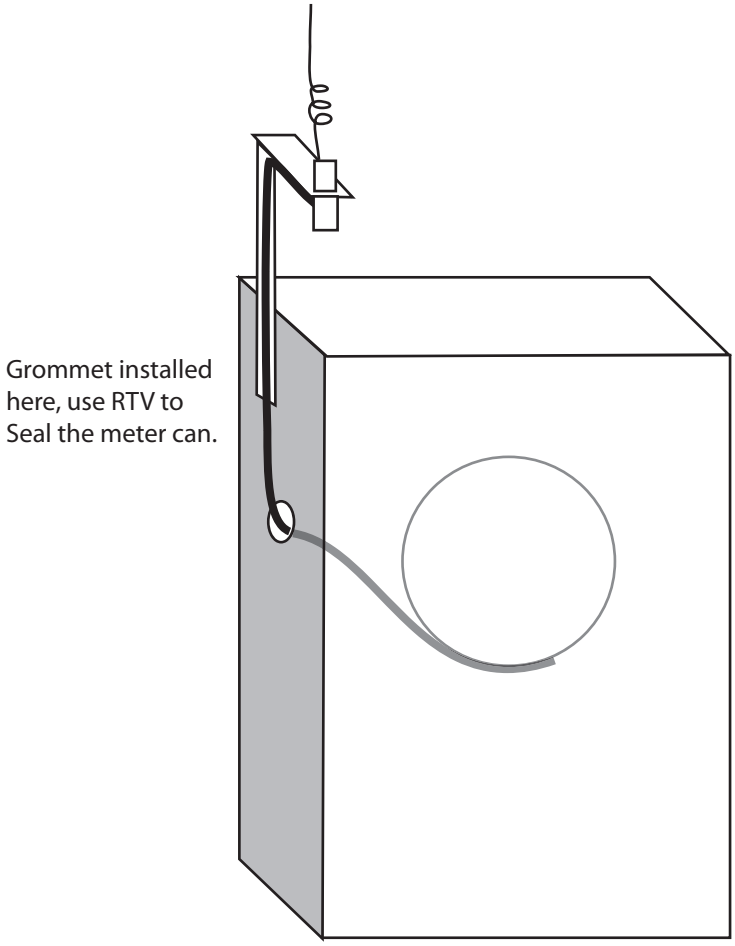

Figure 9. Example Remote Antenna Illustration