FCC Part 15.247 Certification Test Report

FCC ID: R7PIWRS3

FCC Rule Part: 15.247

ACS Report Number: 04-0264-15C

Manufacturer: Cellnet Technology, Inc.
Equipment Type: Utility Meter Usage Data Transceiver
Model: IWR with Utilinet DC Radio

Installation and Operators Guide

cellnet

UtiliNet®
Technical Reference Guide

Revision 2.1

Proprietary Rights Notice

This manual is an unpublished work and contains the trade secrets and confidential information of Cellnet which are not to be divulged to third parties and may not be reproduced or transmitted in whole or part, in any form or by any means, electronic or mechanical for any purpose, without the express written permission of Cellnet. All rights to designs or inventions disclosed herein, including the right to manufacture, are reserved to Cellnet

The information contained in this document is subject to change without notice.
Cellnet reserves the right to change the product specifications at any time without incurring any obligations.

Trademarks Used in This Manual

UtiliNet is a registered trademark of Cellnet.

Windows is a trademark of Microsoft Corporation.

MapInfo is a registered trademark of MapInfo Corporation

UtiliNet Technical Reference Guide

UTLG-0002-GB-08.04

Cellnet
30000 Mill Creek Ave., Suite 100
Alpharetta, GA 30022
Tel: (678) 258-1500
Fax: (678) 258-1550

Copyright© 2004
Cellnet
All rights reserved.

Compliance With FCC Regulations

NOTE: This equipment has been tested and found to comply with the limits for a Class B digital device, pursuant to Part 15 of the FCC Rules. These limits are designed to provide reasonable protection against harmful interference in a residential installation. This equipment generates, uses and can radiate radio frequency energy and, if not installed and used in accordance with the instructions, may cause harmful interference to radio communications. However, there is no guarantee that interference will not occur in a particular installation. If this equipment does cause harmful interference to radio or television reception, which can be determined by turning the equipment off and on, the user is encouraged to try to correct the interference by one or more of the following measures:

- Reorient or relocate the receiving antenna.
- Increase the separation between the equipment and receiver.
- Connect the equipment into an outlet on a circuit different from that to which the receiver is connected.
- Consult the dealer or an experienced radio/TV technician for help.

Changes or modifications to this device not expressly approved by Cellnet could void the user s authority to operate the equipment.

RF Exposure

In accordance with FCC requirements of human exposure to radiofrequency fields, the radiating element shall be installed such that a minimum separation distance of 20cm is maintained between it and the user or general population.

Industry Canada

All Equipment:

This Class B digital apparatus meets all requirements of the Canadian Interference Causing Equipment Regulations. Operation is subject to the following two conditions: (1) this device may not cause harmful interference, and (2) this device must accept any interference received, including interference that may cause undesired operation.

Cet appareillage numérique de la classe B répond à toutes les exigences de l'interférence canadienne causant des règlements d'équipement. L'opération est sujette aux deux conditions suivantes: (1) ce dispositif peut ne pas causer l'interférence nocive, et (2) ce dispositif doit accepter n'importe quelle interférence reçue, y compris l'interférence qui peut causer l'opération peu désirée.

Notes:

Table of Contents

Proprietary Rights Notice ii
Trademarks Used in This Manual ii
Compliance With FCC Regulations iii
RF Exposure iii
Industry Canada iii
All Equipment: iii

Chapter 1 Introduction

System Overview 1-1
UtiliNet Basics 1-2
Network of Intelligent Radios 1-2
Mesh Architecture 1-3
Radios With Programmable Intelligence 1-3
Packets Hop From Radio To Radio 1-3
Polling and Report By Exception 1-3
About This Manual 1-4
Icons 1-5
Contacting Technical Support 5
Telephone 5
Fax 6
Email 6

Chapter 2 Integrated WanGate Radio (IWR)

IWR VDC Version (P/N 269550000-000) 2-1
120 VAC to 12 VDC Power Adapter (P/N 105690-000) 2-2
IWR Pinout 2-4
IWR DC Version Specification 2-4
IWR AC Version (P/N 269560000-000) 2-5
IWR AC Version Specifications 2-7
Antenna Kit (P/N 105665-000) 2-8
Filter (P/N 106460-000) 2-9
Bandpass Filter Specifications 2-10
IWR General Specifications 2-10
IWR Installation 2-12
IWR With AC Power Supply Installation 2-13

Chapter 3 WanGate Radios

120/240 VAC WanGate Radio 3-2
120/240 VAC, w/Battery WanGate Radio 3-4
120/240 VAC, w/Filter WanGate Radio 3-5
120/240 VAC, w/Battery, w/Filter WanGate Radio 3-6
AC Power Cable, 10’ Unterminated #16 SJO (P/N 105704-000) 3-7

AC Power Cable, 10' Unterminated #10 Two Wires (P/N 105627-000) . . . 3-8
AC Power Cable, 6' Terminated AC Plug (P/N 105628-000) . . . 3-9
RS-232 Signal, 40' Unterminated (P/N 105554-000) . . . 3-10
RS-232 Signal & DC Power Cable, 10' Unterminated (P/N 105552-000) . . . 3-11
RS-232 Programming Cable, 6' Terminated Two DB-9 (P/N 105617-000) . . . 3-12
Battery (P/N 105360-000) . . . 3-13
UtiliNet WanGate Radio . . . 3-14
WanGate Pinout . . . 3-15
UtiliNet WanGate Radio Specifications . . . 3-15
UtiliNet Radio General Specifications . . . 3-17
WanGate Installation . . . 3-18

Chapter 4 UtiliNet MicroRTU WanGate Radio

120/240 VAC, w/Battery MicroRTU WanGate Radio . . . 4-2
RS-232 Signal & I/O Cable, 10' Unterminated (P/N 106459-000) . . . 4-4
RS-232 Programming Cable, 6' Terminated DB-9 (P/N 106468-000) . . . 4-5
UtiliNet Micro RTU WanGate Radio . . . 4-6
MicroRTU WanGate Pinout . . . 4-7
UtiliNet Micro RTU WanGate Radio Specifications . . . 4-8
UtiliNet Radio General Specifications . . . 4-10
MicroRTU WanGate Installation . . . 4-11

Chapter 5 UtiliNet Network Radio

120 VAC Network Radio (P/N 105644-000) . . . 5-2
120 VAC, "N" Connector Antenna Mount Network Radio (P/N 105646-000) . . . 5-3
240 VAC Network Radio (P/N 105645-000) . . . 5-3
240 VAC, "N" Connector Antenna Mount Network Radio (P/N 105647-000) . . . 5-3
UtiliNet Network Radio . . . 5-4
Network Pinout . . . 5-4
Network Installation . . . 5-5
UtiliNet Network Radio Specifications . . . 5-6
UtiliNet Radio General Specifications . . . 5-7

Chapter 6 Antenna Guide

Antenna Configurations . . . 6-2
Antenna Mounting Hardware . . . 6-3
Remote Mount Antenna . . . 6-3
Vertical Pipes and Tower Legs . . . 6-3
Wooden Poles . . . 6-4
Antenna Cable Assemblies . . . 6-5
Antenna Models . . . 6-6
Jumper Cable Assemblies . . . 6-6
Application Notes . . . 6-8
Mounting Antenna Directly to the Equipment Cabinet . . . 6-8
Using a Bulkhead Connector . . . 6-8
Impulse Suppressor . . . 6-9

Weather Protection 6-9

Chapter 7 SCADA Application Development

Connection Oriented Networks 7-1
Master/Slave Architectures 7-1
Polling Methods 7-2
Communications Architectures 7-2
Round-Robin Polling 7-2
Communications Exchanges 7-3
Connectionless Networks 7-3
Packet-Switched Technology 7-4
SCADA Protocol Structure 7-4
Master Request 7-4
Address 7-4
Opcode 7-5
Length 7-5
Data - Opcode Dependent 7-5
Checksum 7-5
RTU Response 7-6
Address 7-6
Opcode 7-6
Status 7-6
Length 7-6
Data - Opcode Dependent 7-7
Checksum 7-7
UtiliNet System Integration 7-7
The Open System Interconnection (OSI) Reference Model 7-8
Physical Layer (Layer 1) 7-8
Data Link Layer (Layer 2) 7-8
Network Layer (Layer 3) 7-8
Design Considerations 7-9
Latency 7-9
Indeterminate Routing 7-9
Addressing 7-9
Timing 7-9
Integration Methods 7-10
Transparent Mode 7-10
Normal 7-10
Prepending 7-10
Frame Recognition 7-10
Polling 7-11
Standard Middleware 7-11
Custom Middleware 7-11
Development Environments 7-11
Device Control Word (DCW) 7-11
Lan Packet Protocol 7-12
Engineering Considerations 7-12
Unsolicited Reporting 7-12
Minimized Traffic 7-13
Multiple Outstanding Messages 7-13

Chapter 8 Network Engineering

Network Design Plan 8-1
OSI Layers 8-1
Traditional Radio Comparisons 8-1
Line-Of-Sight 8-2
Network Design for 900 MHz Systems 8-2
Calculating Latitude/Longitude Coordinates 8-3
Global Positioning System (GPS) 8-3
United States Geological Survey Maps - USGS Maps 8-4
MapInfo 8-4
RF Considerations and System Design 8-5
Radio Link Budget 8-5
Transmitter 8-5
Transmit Antenna 8-5
Ground Plane Effects 8-6
Transmitter Transmission Line Loss 8-6
Total Path Loss 8-6
Free Space Path Loss 8-7
Additional Path Loss Attenuation 8-7
Receiver Antenna 8-8
Receiver Transmission Line Loss 8-8
Receiver 8-8
Noise Floor Factor 8-8
Multipath Fade Factor 8-8
Margin of Safety 8-9
Summary 8-9
Keeping a Check on Interference 8-10
In-Band Interference 8-11
Antenna Spacing 8-11
Out-of-Band Interference 8-11
Cellular Base Station Interference 8-12
Paging System Interference 8-12
RF Filter Recommendation 8-12
Performing RF Field Studies 8-13
Design Considerations 8-14
Use of Directional or Gain Antennas 8-14
Directional Antennas 8-15
Site Surveying 8-15
Weak Connectivity 8-16

Chapter 9 Network Installation

Radio Configuration 9-1
Configuring a Radio 9-1
Reconfiguring a Radio 9-2
Network Routing 9-2
Limitations of Standard Routing 9-3
Problem Routing Situations 9-3
Cul-de-sacs 9-6
Indications of Routing Problems 9-7
Excessive Delays 9-7

Lost Packets . . . 9-7
Identifying Routing Problems . . . 9-7
Connectivity . . . 9-8
Scan Lists . . . 9-9
Customizing Routing . . . 9-10
Improving Connectivity: Additional Routers . . . 9-10
Non-Routers . . . 9-12
Fake Latitude/Longitudes . . . 9-14
Domain Routing . . . 9-17
Domain Routing Modes . . . 9-20
Route to Core . . . 9-20
Core Routing . . . 9-21
Mobile Radio Considerations . . . 9-23
Configuring Mobile Radios . . . 9-23
Unconfiguring Mobile Radios . . . 9-23
Talking From Mobile Radios . . . 9-24
Talking to Mobile Radios . . . 9-24
Mobile Radio Behavior . . . 9-24
Upgrading Radio Firmware . . . 9-25
Radios . . . 9-25
Series I Radios . . . 9-26

Chapter 10 Support Products and Services

Miscellaneous Accessories . . . 10-1
Antenna, 5 dB Gain Whip, 915 MHZ, N-Male (P/N 106119-000) . . . 10-1
RPLC MetriModem (P/N 102740-000) . . . 10-1
General Software . . . 10-2
RadioShop Software (P/N 107558-000) . . . 10-2
UtiliNet ToolBox (P/N 512971-020) . . . 10-2
Firmware Upgrades . . . 10-3
Serial Download Tool (SDT) . . . 10-3
Network Download Tool (NDT) . . . 10-3
Middleware . . . 10-4
Allen Bradley DF1 Full-Duplex Intercept Drivers . . . 10-4
Allen Bradley DF1 Full-Duplex Intercept Drivers-Corporate License . . . 10-5

Appendix A Unlicensed Radio Using Spread Spectrum: a Technical Review

Abstract A-1
Background A-1
Technology and Licensing A-2
Frequency Hopping: The Most Robust A-5
Capacity—The Windfall of Spread Spectrum A-7
But What Happens When Everyone Is On The Band? A-8

Appendix B Implementation of Unlicensed Wireless Technology

Abstract B-1
Background B-1
Frequency Hopping Techniques B-3
Synchronous B-3
Asynchronous B-3
How It's Done B-4
New FCC Regulations For 902 To 928 MHZ B-5
References B-5

Glossary

Index 1

List of Figures

Figure	Figure Titles	Page
1.1	UtiliNet Technologies	1-1
2.1	Integrated WanGate Radio DC Version	2-1
2.2	Integrated WanGate Radio DC Version Components	2-2
2.3	120 VAC to 12VDC Power Adapter	2-2
2.4	IWR DC Version Mounting	2-3
2.5	IWR Pinout	2-4
2.6	Integrated WanGate Radio AC Version	2-5
2.7	Integrated WanGate Radio AC Version Components	2-6
2.8	IWR AC Version Mounting	2-7
2.9	Antenna Kit Components	2-9
2.10	Filter	2-9
2.11	IWR Installation	2-12
2.12	IWR with AC Power Supply Installation	2-13
3.1	WanGate Radio	3-1
3.2	WanGate Radio	3-3
3.3	AC Power Cable #16	3-7
3.4	AC Power Cable #10	3-8
3.5	AC Power Cable 6’	3-9
3.6	RS-232 Signal	3-10
3.7	RS-232 Signal and Power Cable	3-11
3.8	RS-232 Programming Cable	3-12
3.9	Battery	3-13
3.10	WanGate Radio	3-14
3.11	WanGate Pinout	3-15
3.12	WanGate Installation	3-18
4.1	MicroRTU WanGate Radio	4-1
4.2	MicroRTU WanGate Radio	4-3
4.3	RS-232 Signal and I/O Cable	4-4
4.4	RS-232 Programming Cable	4-5
4.5	MicroRTU WanGate Radio	4-6
4.6	MicroRTU WanGate Pinout	4-7
4.7	MicroRTU WanGate Installation	4-11
5.1	Network Radio	5-1
5.2	Network Radio	5-2
5.3	Network Radio	5-4
5.4	Network Pinout	5-4
5.5	Network Installation	5-5
6.1	Integrated WanGate Radio Antenna Configuration	6-2
6.2	Antenna Mounting Hardware	6-4
6.3	Antenna Mounting	6-5
6.4	Jumper Cable Assemblies	6-7
6.5	Antenna Mounting to Equipment Cabinet	6-8
6.6	Bulkhead Connector - 91100	6-8
6.7	Impulse Suppressor - LA900	6-9
9.1	Standard Format (Geographic Routing)	9-3
9.2	Problem Routing Situations - Obstructed Sites	9-4
9.3	Problem Routing Situations - Localized Connectivity	9-5
9.4	Problem Routing Situations - Routing Efficiency	9-5

Figure	Figure Titles	Page

9.5 Problem Routing Situations - Non-Forward Routing 9-6
9.6 Cul-de-sacs 9-7
9.7 WAN Nodes Report 9-8
9.8 Scan List Report 9-10
9.9 Customizing Routing-Adding New Radios 9-11
9.10 Customizing Routing - Non-Routing Radios 9-13
9.11 Customizing Routing - Faking Geographic Locations 9-15
9.12 Customizing Routing - Faking to Exclude Radios 9-16
9.13 Customizing Routing - Domain Routing 9-18
9.14 Domain Routing Report from Domain Radio 9-21
9.15 Domain Routing Query Report from Core Radio. 9-22
10.1 5 dB Antenna 10-1
10.2 RPLC Metrimodem 10-2

List of Tables

Table	Table Titles	Page
2.1	IWR DC Version Specification	2-4
2.2	IWR AC Version Specifications	2-7
2.3	IWR General Specifications	2-10
3.1	UtiliNet WanGate Specifications	3-15
3.2	UtiliNet Radio General Specifications	3-17
4.1	UtiliNet MicroRTU WanGate Specifications	4-8
4.2	UtiliNet Radio General Specifications	4-10
5.1	UtiliNet Network Radio Specifications	5-6
5.2	UtiliNet Radio General Specifications	5-7
8.1	Free-Space Path Loss	8-7
8.2	Multipath vs. Percent Coverage	8-9
8.3	Example Link Budget Calculation	8-9
8.4	Minimum Free-Space Antenna Spacing	8-11
8.5	RF Filter Sources	8-12
8.6	Connectivity Table	8-14
8.7	Directional Antenna FCC Candidates	8-15

Notes:

Chapter 1 Introduction

This manual provides technical information for the line of radios used in the UtiliNet® Wireless System. Included are photos, specifications, diagrams, and accessories for each radio type as well as detailed information on applications using the radios and other related information.

System Overview

UtiliNet is a comprehensive wireless data communications solution that utilizes spread-spectrum radios in the 902-928 MHz area of the radio spectrum to provide reliable network answers for remote telemetry or distributed control applications. UtiliNet radios combine three important technologies: a mesh architecture for peer-to-peer communications and true networking functionality, asynchronous spread spectrum frequency hopping for maximum use of bandwidth, and packet switching for guaranteed message transfer and automatic store-and-forward routing.

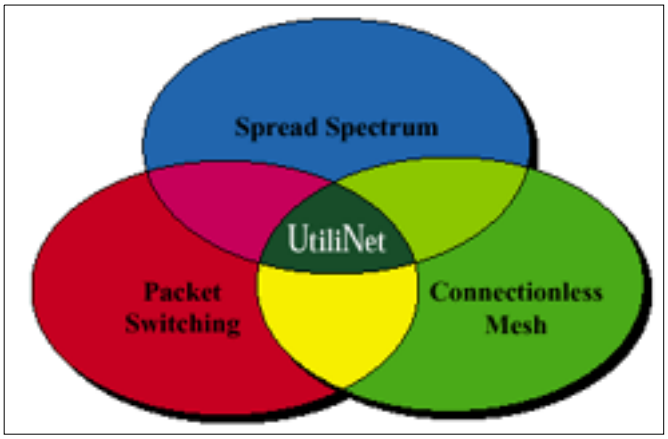

Figure 1.1 UtiliNet Technologies

These three technologies work together to ensure that UtiliNet networks are fast (up to 9600 bps), operate transparently, and are reliable in the delivery of all data messages. These are the key advantages of UtiliNet.

UtiliNet Basics

UtiliNet is a wireless data communications network based on spread-spectrum radio technologies.

Network of Intelligent Radios

UtiliNet radios form the foundation of a UtiliNet network and serve multiple functions.

- Each radio can communicate to end devices for some data collection or control function.

  This may involve transparent applications where data is merely passed through UtiliNet radios, or it may involve programs running in radios and/or other gateway devices to perform custom applications, higher network efficiency or enhanced functionality.
- Each radio interacts with its UtiliNet radio RF neighbors to form a wide area network (WAN) into which it may initiate a packet, automatically route a packet between other radios, or accept a packet as the final destination.
- Each radio automatically integrates itself into an RF wide area network and routes packets.

  Upon power up or reboot, and at intervals while powered on, a radio automatically scans the frequency band searching for other UtiliNet radios in its vicinity to learn about its RF neighbors. As the radios learn about one another, they pass their geographic address coordinates for routing and to keep communication statistics for choosing the best data transmission paths. This allows the radios to automatically route packets and dynamically build routing tables to choose the best paths if RF conditions change. Once configured by the user, radios automatically acquire radios and route packets.
- Each radio can execute one or more programs written in the Device Control Word (DCW) language.

  These programs can send, receive, and process packets to and from other radios. They also are able to send, receive, and process data to and from end devices connected to the radio. Examples of DCW applications include: radio configuration, radio queries, data collection, communication to end devices, protocol translation and peer-to-peer control.

Several types of UtiliNet radios are available:

- The Integrated WanGate Radio (IWR) and WanGate radio are used with RS-232 end devices and as additional repeaters if necessary (the IWR is designed for installation inside another enclosure and the WanGate is designed for independent outdoor installations).
- The MicroRTU WanGate radio allows an integrator to install an appropriate RTU into the specialized MicroRTU WanGate enclosure to create a combined RTU and radio communication package.
- The Network radio is used with Reliable Power Line Carrier (RPLC) end devices.

Mesh Architecture

Much like a giant net over a service area—UtiliNet radios work together to create a mesh. At each point where one thread of the net crosses over another, a node is created in the wider area network.

A node could be represented by one radio attached to end-devices.

Because each radio can forward messages to and respond to every other radio in the network, each radio is an equal participant in the network. The result is increased communication reliability because there is no single point of failure. While a radio is interacting with an end-device, it can be simultaneously acting as part of the mesh network. The concept of creating a mesh is central to what makes UtiliNet a truly robust data communication solution.

Radios With Programmable Intelligence

Each radio is similar to a programmable logic controller (PLC). The radio acts much like a small computer, carrying out any number of computing and command functions. The intelligence in each radio enables it to perform many functions not normally associated with radios such as making intelligent routing decisions, transporting industry protocols, and recognizing operating conditions and responding with pre-programmed logic.

Packets Hop From Radio To Radio

When an end device generates a message that needs to traverse the network, the end-device radio packets the data, places the data into an envelope—addressed to the destination radio—and enters it into the network. The data packet traverses the network by hopping from radio to radio in the direction of the destination radio. The number of hops between origin and destination radio(s) is automatically minimized to increase transmission speed. The route chosen for traversing the network is dynamic and employs automatic re-routing in the event a particular data path is not clear.

Polling and Report By Exception

Traditional point-to-multipoint systems are prone to network latency as only one radio can communicate with the master at a time. A mesh network eliminates this problem as data is evenly spread across the entire mesh (i.e., a multipoint-to-multipoint network). Further, most traditional network topologies poll, gathering data sequentially. UtiliNet radios can be programmed to respond under predetermined parameters or on an unsolicited, report-by-exception basis—which is both faster and more efficient.

About This Manual

This technical reference guide explains UtiliNet in great detail from application design through implementation and operation to after-sales services and support. Also included are a glossary of important terms and papers on extended UtiliNet topics.

Chapter	Title	Description
1	Introduction	Provides introductory information about the Utilinet network and this manual.
2	Integrated WanGate Radio (IWR)	Describes the Integrated WanGate Radio.
3	WanGate Radios	Describes the WanGate Radios.
4	UtiliNet MicroRTU WanGate Radio	Describes the UtiliNet MicroRTU WanGate Radio.
5	UtiliNet Network Radio	Describes the UtiliNet Network Radio.
6	Antenna Guide	Provides information on antenna installations.
7	SCADA Application Development	Gives detailed information on SCADA structure and development, as well as UtiliNet system integration.
8	Network Engineering	Contains information on network design, latitude/ longitude calculations, system design, field studies, and use of directional antennas.
9	Network Installation	Provides information and drawings for radio configuration, transparent configuration, radio installation, network routing, mobile radio configuration, as well as upgrading radio firmware.
10	Support Products and Services	Provides descriptions of commonly used UtiliNet radio support products and services.
Appendix A	FCC Regulations	Appendix A contains the FCC rules and regulations pertaining to UtiliNet radios.
Appendix B	Unlicensed Radio Using Spread Spectrum: a Technical Review	Appendix B presents a paper providing additional information on using spread-spectrum technology.
Appendix C	Implementation of Unlicensed Wireless Technology	Appendix C presents a paper providing additional information on the implementation of unlicensed wireless technology.
Glossary		Provides a list of terms and definitions commonly used in UtiliNet radio applications.
Index		Provides an index into this Technical Reference Guide.

Icons

Throughout the document, various icons are used to draw your attention to important information. Below are examples:

The warning icon identifies information that is critical to maintaining the integrity of the software or data.

The caution icon identifies important information.

The note icon identifies information that clarifies a point within the text.

Contacting Technical Support

Within the United States, Cellnet technical support is available Monday through Friday, 8:00 A.M. to 6:30 P.M. Eastern Standard Time by telephone, fax, or email. Whichever method you use to contact technical support, be prepared to give the following information:

- Exactly what problem you encountered.
- A description of what happened and what you were doing when the problem occurred.
- A description of how you tried to solve the problem.

Telephone

Technical support is available by calling 1-866-877-2007. If all support technicians are helping other customers, your call will be routed to the Cellnet Support voice mail system. Please leave a brief message that includes the following information:

- Your name
- Your company's name
- Your telephone number

A support technician will return your call as soon as possible within normal business hours. Technicians return all calls in the order that they are received.

Fax

If you prefer, you may fax a description of your problem any time to 1-864-638-4850. A support technician will answer your fax within 24 hours. Follow these instructions when sending a fax:

- Address the fax to “Cellnet UtiliNet Support.”
- Include a brief description of the problem.
- Tell Cellnet the best time of day to contact you.

Email

If you prefer, you may email a description of your problem to:

elecsupt@slb.com

A support technician will return your email as soon as possible within normal business hours. Technicians return all emails in the order that they are received.

Chapter 2 Integrated WanGate Radio (IWR)

The UtiliNet Integrated WanGate Radio (IWR) communicates via RS-232 to end devices and is designed for internal mounting, such as inside a remote terminal unit enclosure. The radio is commonly interfaced with such devices as remote terminal units (RTUs), programmable logic controllers (PLCs), and other intelligent end devices (IEDs).

The Integrated WanGate has two RS-232 serial ports—a LAN Packet Protocol Port and a Transparent Port. The LAN Packet Protocol Port is used to communicate to devices which use UtiliNet LAN Packet Protocol (ULPP), such as a PC with configuration or diagnostic software, or an end device which has implemented ULPP. The Transparent Port is a general data port and used to transport byte-oriented data, such as that generated by industry standard protocols.

The Integrated WanGate Radio comes in a 12/24 VDC version and an AC version which combines the DC radio with a 120 VAC power supply.

IWR VDC Version (P/N 269550000-000)

The IWR, DC version, comes in a metal enclosure and is designed to be placed inside an RTU or like enclosure (see Figure 2.1).

Figure 2.1 Integrated WanGate Radio DC Version

The radio has a two-pin Molex connector for 12/24 VDC input. It has one DB-9 RS-232 connector for transparent data and one DB-9 connector for ULPP operations.

The radio comes with a standard N-Female antenna connector mount and mounting hardware (see Figure 2.2).

Included are the following:

- Integrated WanGate Radio
- Two mounting brackets
- Four 6-32 screws
- Four 10-32 screws
- Four 10-32 hex nuts
- DC power connector with 48" cable
- Reference mounting drawing

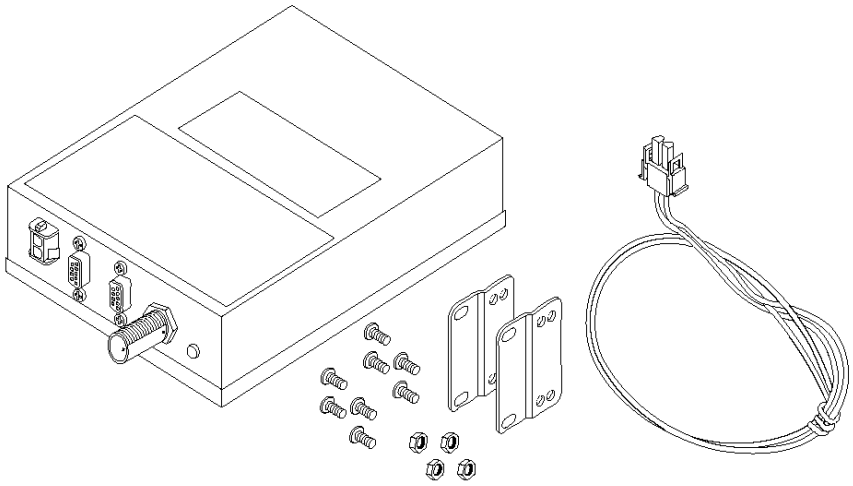

Figure 2.2 Integrated WanGate Radio DC Version Components

120 VAC to 12 VDC Power Adapter (P/N 105690-000)

This Power Adaptor Cube (see Figure 2.3) plugs into a 120 VAC outlet and provides 12 VDC to the IWR, DC version. The cable is 68" long. Since the DC version of the IWR is intended to be wired directly to 12 VDC in a final installation, this is typically only used for demonstration and test purposes.

Figure 2.3 120 VAC to 12VDC Power Adapter

See Figure 2.4 for dimensional drawing and mounting options.

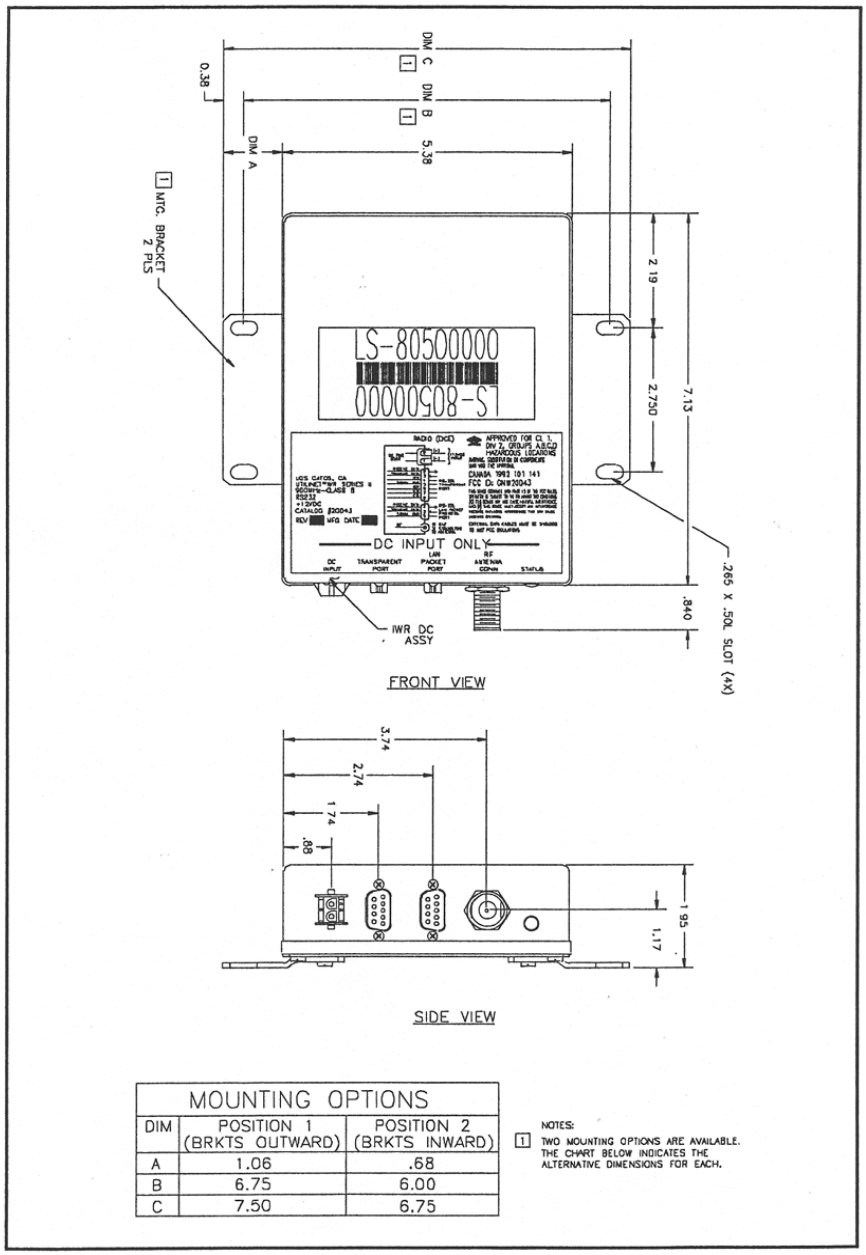

Figure 2.4 IWR DC Version Mounting

IWR Pinout

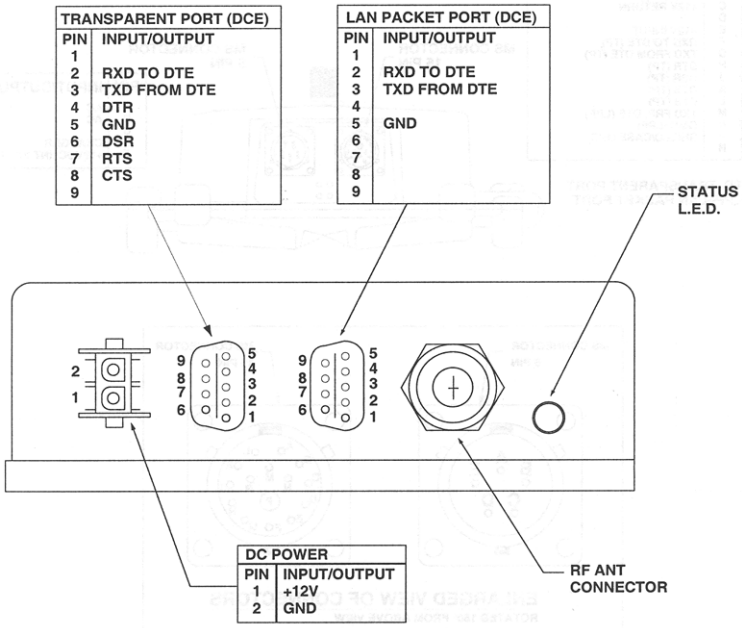

Figure 2.5 IWR Pinout

IWR DC Version Specification

Table 2.1 IWR DC Version Specification

Data Ports/Formats		
UtiliNet LAN Packet Port		
Serial Interface	RS-232C	
Data Rate	1200 or 9600 bps (N, 8, 1, FDX)	
Protocol	UtiliNet LAN Packet Protocol	
Transparent Port		
Serial Interface	RS-232C	
Data Rate	300, 600, 1200, 2400, 4800, 9600, 19200, or 38400 bps	
Parity	Odd, Even, or None	
Data Bits	7 or 8	
Stop Bits	1 or 2	
Duplex	FDX	
Protocol	Any Asynchronous Byte-Oriented Protocol	
Power		
	12 VDC Operation	24 VDC Operation
Input Voltage Range	10.5 - 16.0 VDC	20 - 2/8 VDC
Input Current	130 mA	70 mA
Input Current (RF transmit max) [1]	260 mA	135mA
Noise & Ripple allowed @ 12 VDC (max)	200 mV p-p	
Agency Approvals		
FCC	Certified Part 15.247	

Mechanical	
Interface Connections	
Power	Amp Mate-N-Lock
Data Ports	DB-9
Antenna	“N” Type, Female
Enclosure (indoor)	Sheet Metal
Weight	1 lb. 6 oz.
Size	5.38"W x 7.97"D x 1.95"H (8.25"W w/mounting brackets)

[1] Maximum transmit duty cycle is estimated to be 15%

IWR AC Version (P/N 269560000-000)

The IWR, AC version (see Figure 2.6) is the DC version of the IWR with a rugged AC power supply, both mounted together on a plate. It is designed to be placed inside an RTU or like enclosure. The radio has an unterminated 3-wire pigtail for 120 VAC input. It has one DB-9 RS-232 connector for transparent data and one DB-9 connector for ULPP operations. The radio comes with a standard N-Female antenna connector mount and mounting hardware.

Figure 2.6 Integrated WanGate Radio AC Version

Figure 2.7 displays the following components:

- Integrated WanGate Radio (w/AC power supply)
- Four 10-32 screws
- Four 10-32 hex nuts
- Reference mounting drawing

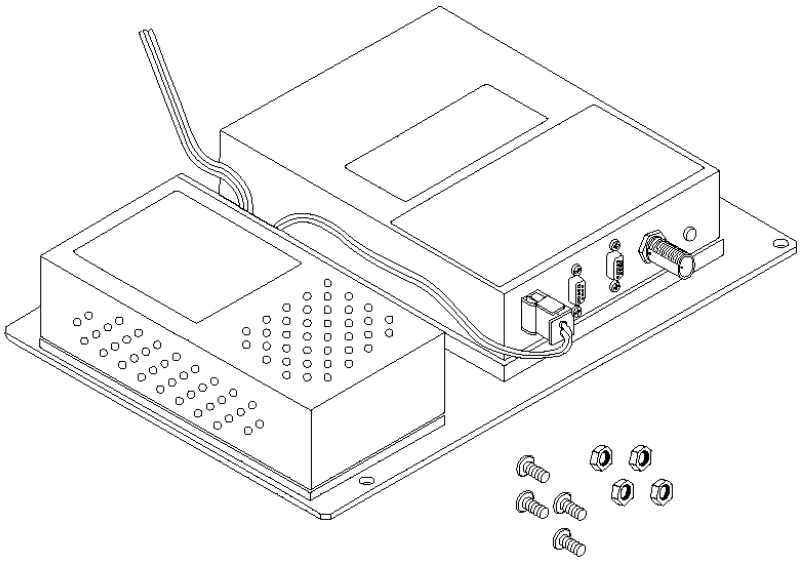

Figure 2.7 Integrated WanGate Radio AC Version Components

Figure 2.8 displays the dimensional drawing and mounting options.

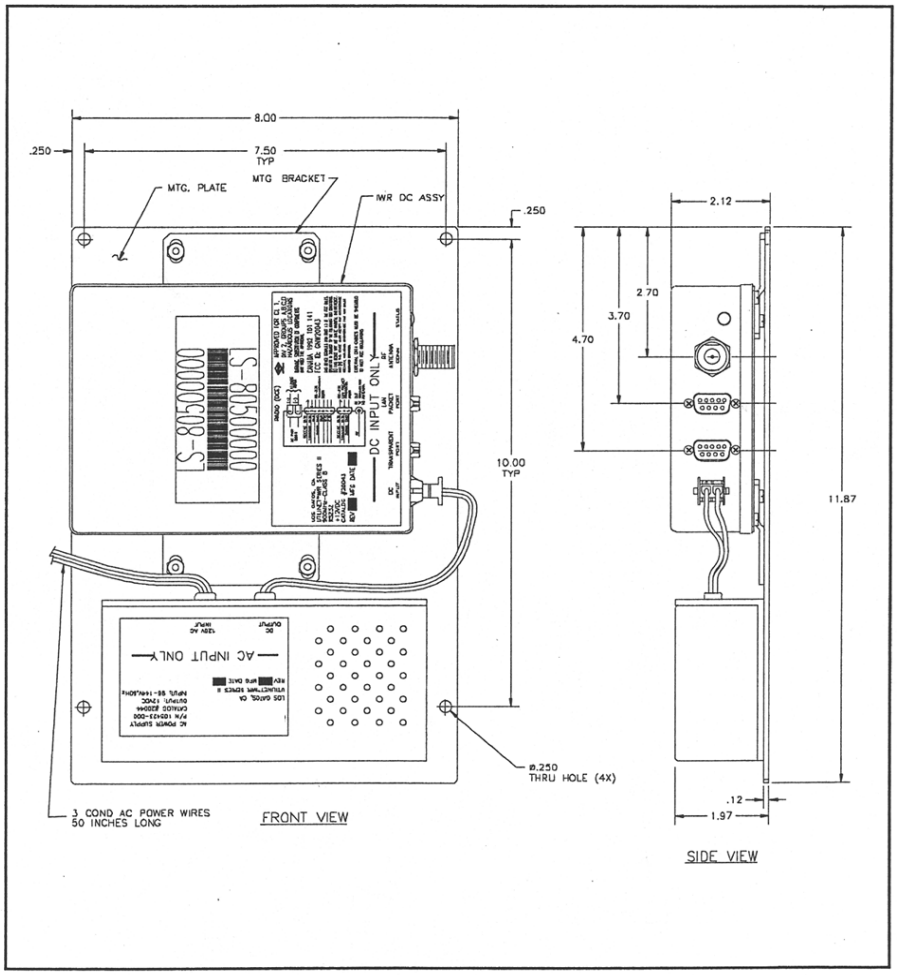

Figure 2.8 IWR AC Version Mounting

IWR AC Version Specifications

Table 2.2 IWR AC Version Specifications

Data Ports/Formats	
UtiliNet LAN Packet Port	
Serial Interface	RS-232C
Data Rate	1200 or 9600 bps (N, 8, 1, FDX)
Protocol	UtiliNet LAN Packet Protocol
Transparent Port	
Serial Interface	RS-232C
Data Rate	300, 600, 1200, 2400, 4800, 9600, 19200, or 38400 bps
Parity	Odd, Even, or None
Data Bits	7 or 8
Stop Bits	1 or 2
Duplex	FDX
Protocol	Any Asynchronous Byte-Oriented Protocol

Power	
120 VAC Operation	
Input Voltage Range	96 - 144 VAC
Input Current	45 mA
Input Current (RF transmit max) [1]	80 mA
Agency Approvals	
FCC	Certified Part 15.247
Mechanical	
Interface Connections	
Power	3-wire pigtail, 18 AWG, 600 V
Data Ports	DB-9
Antenna	“N” Type, Female
Enclosure (indoor)	Sheet Metal
Weight	4 lb. 12 oz.
Size	8.00"W x 10.00"D x 2.12"H

[1] Maximum transmit duty cycle is estimated to be 15%

Antenna Kit (P/N 105665-000)

The antenna kit provides a simple 5dB gain whip antenna and extends the IWR antenna connection to an adaptor on the enclosure in which it is installed.

Figure 2.9 displays the following components:

- Antenna, 5 dB gain whip, 915 MHz, N-Male
- Coax jumper cable, RG 58, 18" N-Male to N-Male
- Antenna mounting plate
- Bulkhead connector w/O-ring gasket, lock washer, and nut
- Reference drawing

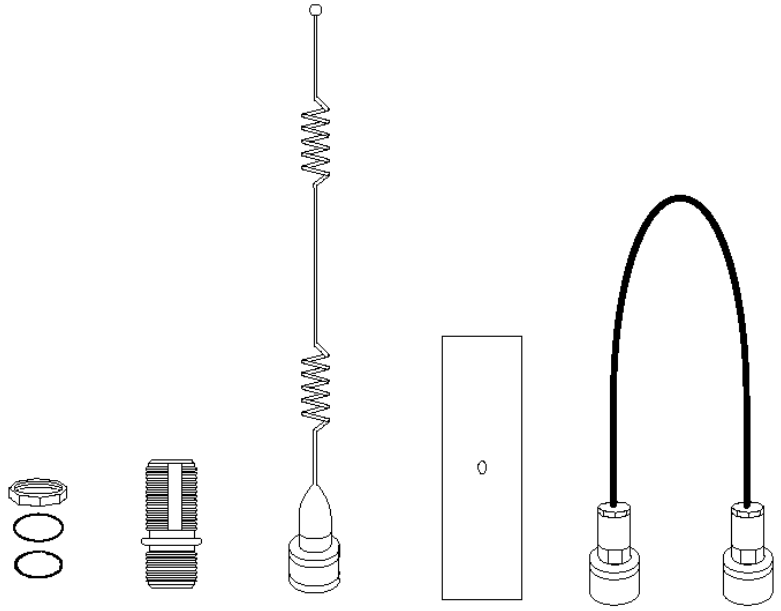

Figure 2.9 Antenna Kit Components

Filter (P/N 106460-000)

This band-pass filter (see Figure 2.10) attenuates out-of-band signals and is used to reject interference from sources such as paging and cellular phones. It is designed to be used with the IWR (both DC and AC) and to be placed inside an RTU or like enclosure. It is a passive filter and connects in-line with the antenna coaxial cable. The coaxial cable on the filter is RG-223 and is 35" long. Only sites that exhibit interference from out-of-band sources require this filter. UtiliNet radios are designed to be in-band interference tolerant; in-band interference has rarely been a problem.

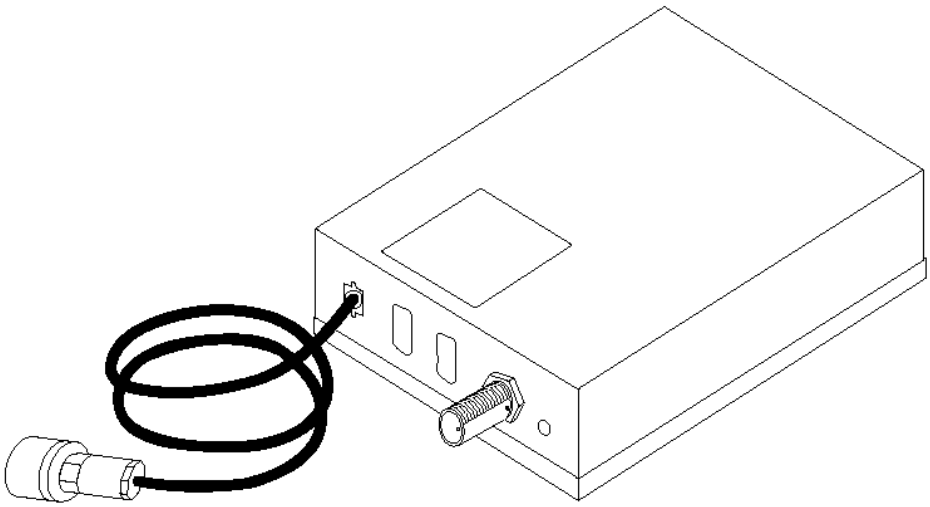

Figure 2.10 Filter

Bandpass Filter Specifications

Environmental Specifications

Temperature	-40°C to 85°C
Operational Vibration	5 to 7.5 Hz 0.5” double amplitude 7.5 to 500 Hz 1.5g
Humidity	95% non-condensing

Electrical Specifications

Center Frequency (nominal)	915 MHz
Insertion Loss (906-920 MHz)	< 1.8 dB
Insertion Loss (902-906 MHz)	<3.0 dB
Insertion Loss (920-924 MHz)	<3.0 dB
Characteristic Impedance	50 Ohms
Max VSWR (902-924 MHz)	1.45:1.0
Ripple (906-920 MHz)	<0.5 dB
30 dB Stopband	800 to 894 MHz 929 to 1030 MHz
65 dB Stopband	DC to 800 MHz 1030 to 2000 MHz
RF Power Capability	> 10 Watts

IWR General Specifications

Table 2.3 IWR General Specifications

General	
Frequency Range	902 - 928 MHz
Channels	240, 25 kHz wide
Channel Spacing	100 kHz
Raw RF Data Rate	9600 bps
Spreading Technique	Frequency Hopping
Hopping Technique	Pseudo Random, Asynchronous
Hopping Patterns	65,536 (Unique per Network)
Network Address	Latitude/Longitude Coordinates
Receiver	
Type	Double Conversion Superheterodyne; 1st IF 45 MHz, 2nd IF 455 kHz
Dynamic Range	-104 to -20 dBm
Packet Error Rate	1x10 -2 (1x10 -6 BER)
IF Selectivity	6 dB down @ 30 kHz
45 MHz IF Rejection	< 90 dB
Frequency Stability	2.5 ppm (0.00025%) @ -30 to +75 °C 5 ppm (0.0005%) @ -40 to +85 °C