DRAFT

Landis+Gyr

Series 6 Gen 2 Network Node S6G2 N651

Data Sheet

Publication: 98-3447 Rev AA

© Landis+Gyr 2025 | Proprietary + Confidential

DRAFT

Landis+Gyr

Limitation on Warranties and Liability

Information in this document is subject to change without notice. This manual or any part of it thereof may not be reproduced in any form unless permitted by contract or by written permission of Landis+Gyr.

In no event will Landis+Gyr be liable for any incidental, indirect, special, or consequential damages (including lost profits) arising out of or relating to this publication or the information contained in it, even if Landis+Gyr has been advised, knew, or should have known of the possibility of such damages.

Covered by both issued and pending patents.

© 2025 Landis+Gyr | Proprietary + Confidential

Contact Us:

To provide feedback about this document, email us at NAMGDCTechDocs@landisgyr.com

Customer Support: 1-888-390-5733 | support.na@landisgyr.com

98-3447 Rev AA | Series 6 Gen 2 Network Node S6G2 N651 Data Sheet | June 30, 2025

DRAFT

Series 6 Gen 2 Network Node S6G2 N651 Data Sheet

Introduction

Landis+Gyr's Series 6 Gen 2 Network Node (S6G2 N651) is key to building a single, integrated IoT network for your utility future. This product is a fully-functional, Network Interface Card (NIC) for the network that is mPCIe standard to enable simple network and sensor device integration. This technology is foundational to Landis+Gyr's industry-leading utility IoT networking solution, Gridstream® Connect. Further, the Series 6 Gen 2 Network Node (S6G2 N651) provides flexibility to grow the value of your IoT platform over time with proven RF Mesh, Mesh IP, and Wi-SUN FAN interoperability as you integrate todays and future AMI or DA networking equipment and third-party IoT devices.

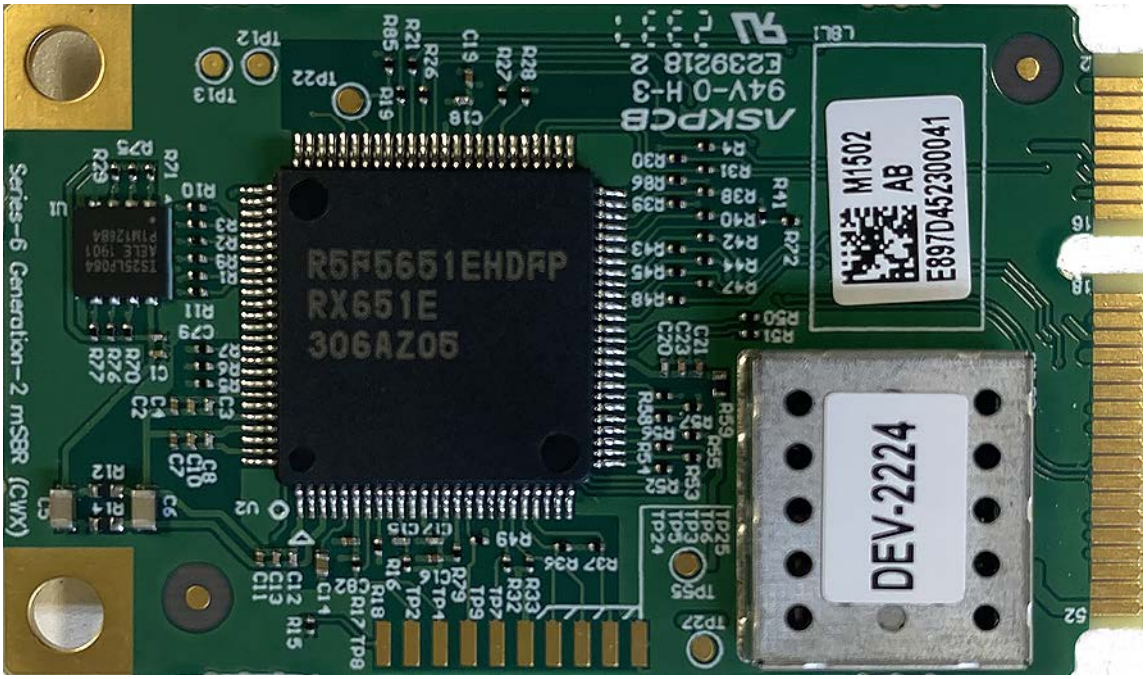

Figure 1. Series 6 Gen 2 Network Node S6G2 N 651

Table 1. Series 6 Gen 2 Network Node S6G2 N651 Specification

Element	Description
Radio Model	S6G2 N651
MAC/PHY Features	
MAC	Automatic Selection of “best” Modulation based on Link Quality
PHY	Adaptive Power Control (i.e., Short range output power back-off) Precision Output Power Management Clear Channel Assessment
Hardware Capabilities	
Clock Speed	120 MHz
RAM Memory	640 KB

DRAFT

Table 1. Series 6 Gen 2 Network Node S6G2 N651 Specification (Continued)

Element	Description			
FLASH Memory	2 MB + 8 MB (External)			
RF Modulation	IEEE 802.15.4 SUN FSK, OFDM			
RF Bands	Sub-GHz (902-928 MHz)			
RF Port	Single Band 50 ohm U.FL Male Connector			
Network Operating Mode	**RF Mesh**	**RF Mesh IP Series 5 Compatible**	**RF Mesh IP Green Field**	**Wi-SUN**
Frequency Range (Fc)	902.3 MHz - 927.8 MHz	North America: 902.4 MHz - 927.6 MHz	North America: 904 MHz - 926.8 MHz	902.2 MHz – 927.8 MHz
		Brazil: 902.4 MHz - 907.2 MHz 915.6 MHz - 927.6 MHz	**Brazil:** 904 MHz - 906.4 MHz 916 MHz - 926.8 MHz	**Brazil:** 902.2 MHz - 907.2 MHz 915.4 MHz - 927.8 MHz
Channel Width	100kHz & 300kHz	400 kHz	1200 kHz	200, 400, 800 & 1200 kHz
Number of Channels	239, 86, 85	**North America:** 64	**North America:** 20	**North America:** 129, 64 31 & 21
		Brazil: 44	**Brazil:** 13	**Brazil:** 89, 44, 21 & 13
Multicast Modulation	2-FSK 9.6kbps	2-FSK 50 kbps	OFDM Option 1 MCS0 (100 kbps)	2-FSK 50 kbps
Unicast Modulation Support	2-FSK: 9.6 - 115.2 kbps	2-FSK: 50 - 200 kbps	OFDM Option 1: MCS0 - MCS6	2-FSK: 50 - 200 kbps
				OFDM Option 3: MCS2 - MCS3 (100 - 200 kbps)
		OFDM Option 3: MCS3 - MCS6		OFDM Option 2: MCS3 - MCS5 (400 - 800 kbps)
				OFDM Option 1: MCS5 - MCS6 (1600 - 2400 kbps)
Data Rate Coverage	9.6 kbps - 115.2kbps	50 kbps - 600 kbps	100 kbps - 2400 kbps	50 kbps - 2400 kbps
Transmitter Output Power	10 mW - 950 mW (peak)	10 mW - 950 mW (peak)	10 mW - 470 mW (average)	10 mW - 950 mW (peak)
Receiver Sensitivity (IEEE 802.15.4)	F2B9K6 = -113 dBm F2B19K2M10 = -110 dBm F2B19K2M05 = -109 dBm F2B38K4 = -107 dBm F2B115K2 = -103 dBm	F2B50 = -107 dBm F2B150 = -104 dBm F2B200 = -102 dBm O3M3 = -110 dBm O3M4 = -108 dBm O3M5 = -105 dBm O3M6 = -101 dBm	O1M0 = -111 dBm O1M1 = -109 dBm O1M2 = -106 dBm O1M3 = -103 dBm O1M4 = -100 dBm O1M5 = -98 dBm O1M6 = -96 dBm	F2B50 = -107 dBm F2B150 = -104 dBm F2B200 = -103 dBm O3M2 = -113 dBm O3M3 = -111 dBm O2M3 = -106 dBm O2M4 = -104 dBm O2M5 = -101 dBm O1M5 = -98 dBm O1M6 = -96 dBm

DRAFT

Series 6 Gen 2 Network Node S6G2 N651

The PCB outline is shown below.

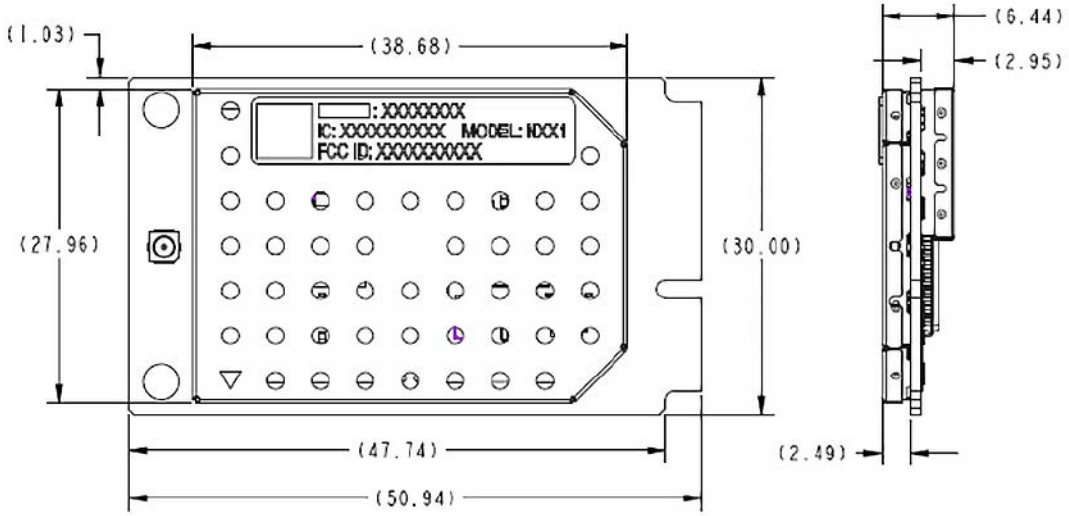

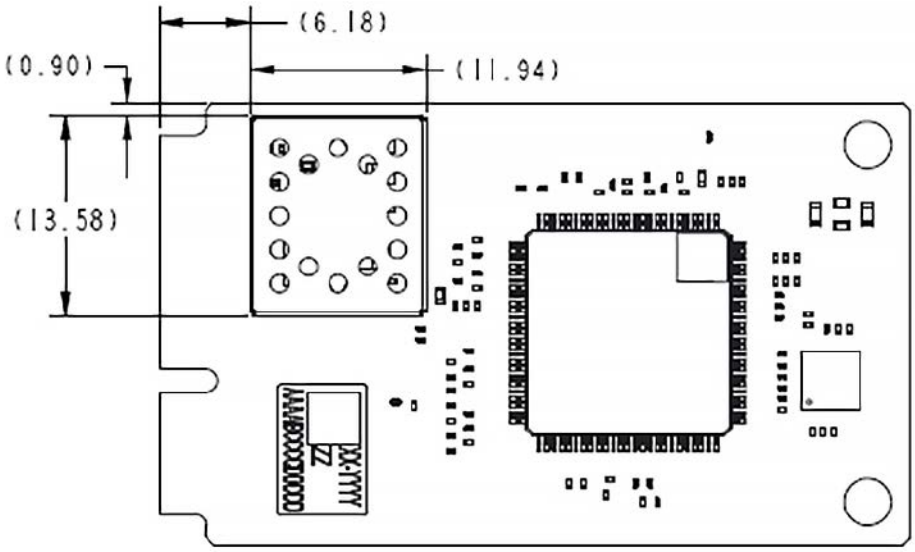

Figure 2. Series 6 Gen 2 Network Node S6G2 N 651

DRAFT

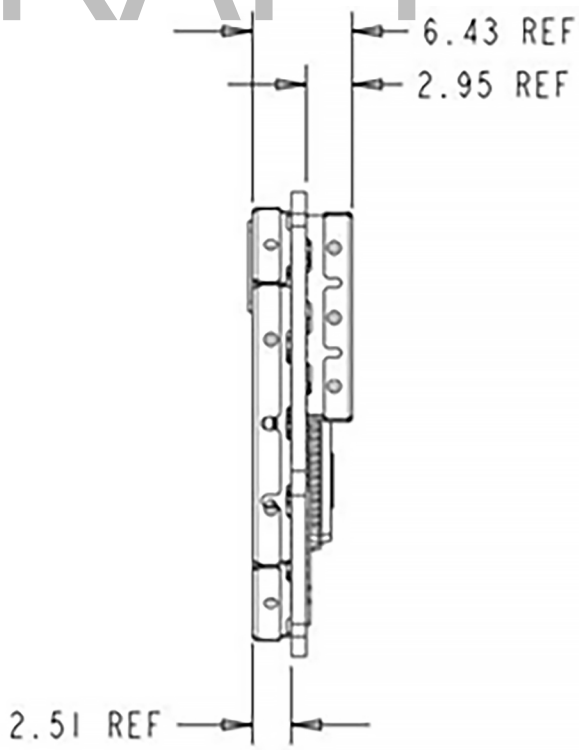

Figure 3. Board Outline

FCC, Industry Canada Compliance

FCC Class B

This device complies with Part 15 of the FCC rules. Operation is subject to the following two conditions:

- This device may not cause harmful interference, and
- This device must accept any interference received, including interference that may cause undesired operation.

This equipment has been tested and found to comply with the limits for a Class B digital device, pursuant to Part 15 of the FCC Rules. These limits are designed to provide reasonable protection against harmful interference in a residential installation. This equipment generates, uses, and can radiate radio frequency energy and, if not installed and used in accordance with the Instructions, may cause harmful interference to radio communications. However, there is no guarantee that interference will not occur in a particular installation. If this equipment does cause harmful interference to radio or television reception, which can be determined by turning the equipment off and on, the user is encouraged to try to correct the interference by one or more of the following measures:

- Reorient or relocate the receiving antenna.
- Increase the separation between the equipment and receiver.
- Consult Landis+Gyr or an experienced radio technician for help.

WARNING: Changes or modifications to this device not expressly approved by Landis+Gyr could void the user's authority to operate the equipment.

DRAFT

RF Exposure

This equipment complies with FCC radiation exposure limits set forth for an uncontrolled environment. This equipment should be installed and operated with minimum distance 36 cm between the radiator and your body. This transmitter must not be co-located or operating in conjunction with any other antenna or transmitter.

Cet équipement est conforme aux limites FCC/ISED d'exposition aux radiations définies pour un environnement non contrôlé. Cet équipement doit être installé et utilisé à une distance minimale de 36cm entre le radia-teur et votre corps. Cet émetteur ne doit pas être co-implantés ou exploités en conjonction avec une autre antenne ou émetteur.

Requirement for Modular Certification

S6G2 N651 network node is approved for use with the antenna listed below. Antenna types not included in the list below or having higher gain than the maximum indicated for that type, are prohibited for use with this device.

The antennas approved for use with the device:

Make	Airgain	Airgain	Airgain
Model	ET920NPMR	ET960NPMR2	ET900SLGAEA
Type	Dipole	Dipole	Directional Patch
Termination	Type N	Type N	Type N
Frequency	902-928 MHz	902-928 MHz	902-928 MHz
Max Antenna Gain	2.7 dBi	5.7 dBi	9.0 dBi

The Host manufacturer is responsible for providing a 50ohm coaxial cable with Type N termination (Antenna) and u.fl termination (Network Node).

Information on Test Modes and Additional Testing Requirements

A diagnostic test mode is available to device integrators that allows control of the transmitter in order to execute FCC 15.247 compliance testing. This mode of operation provides a basic command interface over a dedicated serial port. Further information on how to enable this mode of operation and a description of the command interface is available to device integrators upon request and under NDA.

Additional Testing, Part 15 Subpart B Disclaimer

The end product with an embedded S6G2 N651 Network Node may also need to pass the FCC Part 15 unintentional emission testing requirements and be properly authorized per FCC Part 15 Subpart B.

Industry Canada

This device complies with Industry Canada license-exempt RSS standard(s). Operation is subject to the following two conditions: (1) this device may not cause interference, and (2) this device must accept any interference, including interference that may cause undesired operation of the device.

Under Industry Canada regulations, this radio transmitter may only operate using an antenna of a type and maximum (or lesser) gain approved for the transmitter by Industry Canada. To reduce potential radio interference to other users, the antenna type and its gain should be so chosen that the equivalent isotropically radiated power (e.i.r.p.) is not more than that necessary for successful communication.

DRAFT

This radio transmitter (identify the device by certification number, or model number if Category II) has been approved by Industry Canada to operate with the antenna types listed below with the maximum permissible gain and required antenna impedance for each antenna type indicated. Antenna types not included in this list, having a gain greater than the maximum gain indicated for that type, are strictly prohibited for use with this device.

Approved Antennas:

Make	Airgain	Airgain	Airgain
Model	ET920NPMR	ET960NPMR2	ET900SLGAEA
Type	Dipole	Dipole	Directional Patch
Termination	Type N	Type N	Type N
Frequency	902-928 MHz	902-928 MHz	902-928 MHz
Max Antenna Gain	2.7 dBi	5.7 dBi	9.0 dBi

Le présent appareil est conforme aux CNR d'Industrie Canada applicables aux appareils radio exempts de licence. L'exploitation est autorisée aux deux conditions suivantes : (1) l'appareil ne doit pas produire de brouillage, et (2) l'utilisateur de l'appareil doit accepter tout brouillage radioélectrique subi, même si le brouillage est susceptible d'en compromettre le fonctionnement.

Conformément à la réglementation d'Industrie Canada, le présent émetteur radio peut fonctionner avec une antenne d'un type et d'un gain maximal (ou inférieur) approuvé pour l'émetteur par Industrie Canada. Dans le but de réduire les risques de brouillage radioélectrique à l'intention des autres utilisateurs, il faut choisir le type d'antenne et son gain de sorte que la puissance isotrope rayonnée équivalente (p.i.r.e.) ne dépasse pas l'intensité nécessaire à l'établissement d'une communication satisfaisante.

Le présent émetteur radio (identifier le dispositif par son numéro de certification ou son numéro de modèle s'il fait partie du matériel de catégorie I) a été approuvé par Industrie Canada pour fonctionner avec les types d'antenne énumérés ci-dessous et ayant un gain admissible maximal et l'impédance requise pour chaque type d'antenne. Les types d'antenne non inclus dans cette liste, ou dont le gain est supérieur au gain maximal indiqué, sont strictement interdits pour l'exploitation de l'émetteur.

ANATEL Regulatory Compliance Brazil

Este equipamento não tem direito à proteção contra interferência prejudicial e não pode causar interferência em sistemas devidamente autorizados. Para mais informações, consulte o site da Anatel www.gov.br/anatel.

Host FCC Label Requirement

In the final installation, the following information must be visible:

- **Contains FCC ID:** R7PMGPM2B1
- **Contains IC:** 5294A-MGPM2B1
- **Model:** S6G2 N651

This device complies with Part 15 of the FCC rules. Operation is subject to the following two conditions:

- This device may not cause harmful interference.
- This device must accept any interference received, including interference that may cause undesired operation.