Network Node

Data Sheet

Publication: 98-1837 Rev AI

© Landis+Gyr 2020 | Proprietary + Confidential

Landis+Gyr

Limitation on Warranties and Liability

Information in this document is subject to change without notice. This manual or any part of it thereof may not be reproduced in any form unless permitted by contract or by written permission of Landis+Gyr.

In no event will Landis+Gyr be liable for any incidental, indirect, special, or consequential damages (including lost profits) arising out of or relating to this publication or the information contained in it, even if Landis+Gyr has been advised, knew, or should have known of the possibility of such damages.

Covered by both issued and pending patents.
For further patent information see: https://www.landisgyr.com/about/patent-notices/

© 2020 Landis+Gyr, Inc. | Proprietary + Confidential

Contact Us:

To provide feedback about this document, email us at ustechnicaldocumentation@landisgyr.com

Technical Support: 1-888-390-5733 | solutionsupport.na@landisgyr.com

98-1837 Rev AI | Network Node Data Sheet | 11/11/2020

Network Node Data Sheet

Introduction

The Network Node is a fully functional radio that can be deeply integrated into sensor and controller products allowing a wide range of devices to communicate over the RF network. After integration, the product functions as an endpoint on the RF mesh network and will route network traffic, further strengthening the network.

There are two models of Network Node the N500 and N550. The N500 operates on RF Mesh networks while the N550 is utilized on RF Mesh IP networks.

Figure 1. Network Node

All parameters specified at 25°C unless specified otherwise.

Table 1. Network Node Specifications

Parameter	Condition	Target			Units	Notes
		Min	Typical	Max		
Power Supply						
Input Voltage		4.0		5.0	VDC	
Current Consumption	Rx mode		70	90	mA	
	Tx mode (low power)		200	250		
	Tx mode (medium power)		250	330		
	Tx mode (high power)		600	750		
General						
Processor	Processor Type		SAM4C			
	Clock Ref		120		MHz	
	RAM (internal)		304		Kbyte	
	Flash (internal)		2		Mbyte	
Additional Memory	Ext. Serial Flash		4		Mbyte	
		902.2		927.8	MHz	NAM Brazil
Frequency Range		920.6		924.6	MHz	Hong Kong
Supported Data Rates	RF Mesh (N500)		9.6		kbps	
			19.2			
			38.4			
			115.2			
	RF Mesh IP (N550)		50			
			150			
			200			
Modulation Type		2-FSK/2-GFSK				Based on the operating mode
No. of channels (RF Mesh)	Narrow channel mode - 9.6, 19.2, 38.4 kbps (100 kHz Channel width)		240			NAM
	Wide channel mode - 9.6, 19.2, 38.4, 115.2 kbps (300 kHz Channel width)		86			

Table 1. Network Node Specifications (Continued)

Parameter	Condition	Target			Units	Notes
		Min	Typical	Max		
No. of channels (RF Mesh IP)	Operating mode - 50, 150, 200 kbps (400 kHz Channel width)		64			NAM
	Operating mode - 50, 150, 200 kbps (400 kHz Channel width)		11			Hong Kong
Transmitter						
Output power	Low power	16	17	18	dBm	<2:1 VSWR load, +25C
	Med power	21	22	23		
	High power #	26.5	28	28.8		
Output power over temperature	Low power	14		19	dBm	Over temperature range, <2:1 VSWR load
	Med power	19		24		
	High power #	25		28.8		
Adjacent channel power	Relative to designed channel		-30	-25	dBc	
Receiver						
Rx Sensitivity (conducted)	9.6 kbps	-114	-112	-110	dBm	90% Packet success rate
	19.2 kbps	-112	-110	-108		
	38.4 kbps	-110	-108	-106		
	115.2 kbps	-102	-100	-98		
	50 kbps	-107	-105	-103		
	150 kbps	-99	-97	-95		
	200 kbps	-98	-96	-94		
Sensitivity over Temp	variation from nominal over temp range	-3		3	dB	
Sensitivity over Frequency Band	variation across the frequency band	-2		1	dB	
Adjacent channel rejection	worst case data rate and channel spacing	30			dB	
Alternate channel rejection	worst case data rate and channel spacing	35			dB	
Out-of-band blocking	+/- 10MHz	60			dB	
Max input signal	no damage	10		15	dBm	
	valid detection (>65% PSR)	0			dBm	

Table 1. Network Node Specifications (Continued)

Parameter	Condition	Target			Units	Notes
		Min	Typical	Max		
Environmental						
Storage Temperature		-40		+85	°C	
Operating Temperature		-40		+85	°C	
Relative Humidity		5		85	%	Non-condensing
Approved Antennas						
Landis+Gyr P/N 106119-000 Whip, 5.5dBi, 50 ohms						
PIFA (-3dBi) associated with Landis+Gyr Streetlight Controller: Certified for use ONLY in Landis+Gyr Streetlight Controller models 26-2494-1011 and 26-2498-2011						
PIFA (+3dBi) associated with Landis+Gyr S710 Line Sensor: Certified for use ONLY in Landis+Gyr Line Sensor model S710						
Slot (0dBi) associated with Landis+Gyr RF Load Control Switch: Certified for use ONLY in Landis+Gyr Load Control Switch models L532 (26-2549) and L534 (26-2505)						

Network Node Dimensions

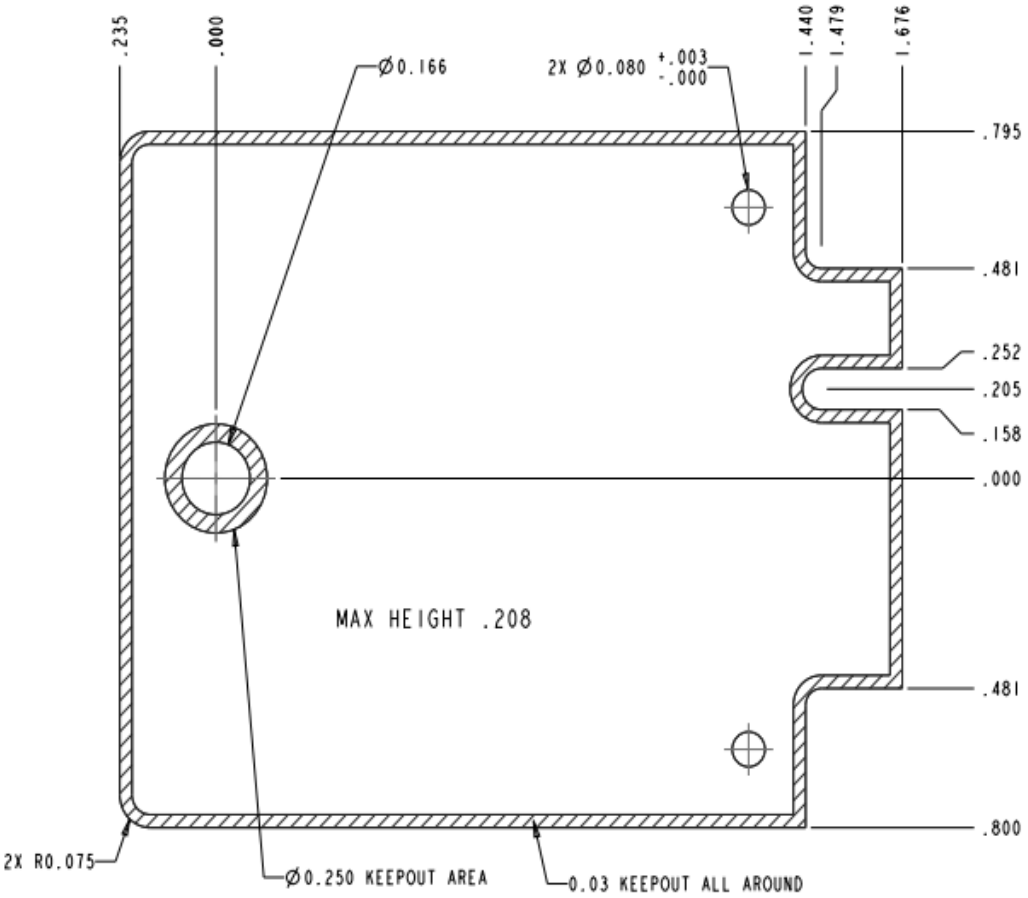

Figure 2. Top Side View

Board Thickness .060”

Height Representation: (Unless Otherwise Noted)

- Top Side: 0.208” Max
- Bottom Side: 0.095” Max

Tooling Holes

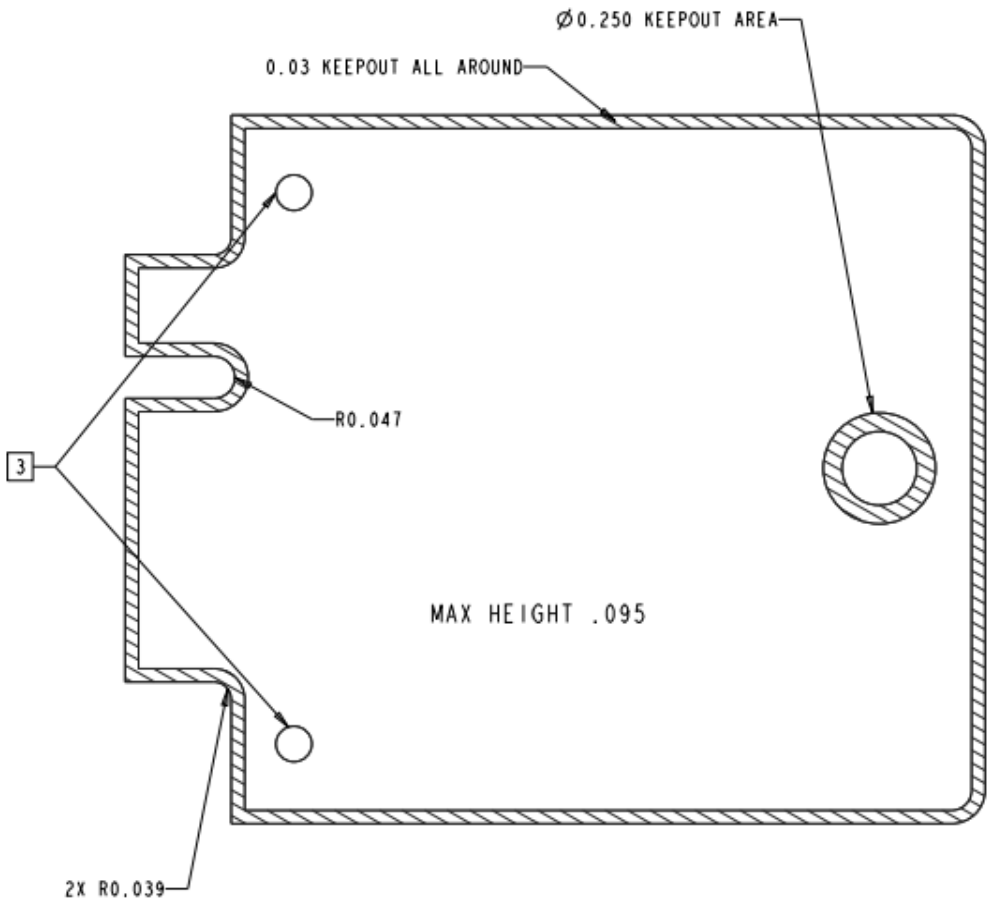

Figure 3. Bottom Side View

Unless otherwise specified: Dimensions are in Inches [MM]

Dimensions are after finish is applied

Angle tolerance does not apply to implied 90 degree angles

Tolerance on:

• **Decimal**	• **Fraction**	• **Agles**
• 1PL +.1	• + 1/64	• + 1°
• 2PL +.2	•	•
• 3PL +.005	•	•

FCC, Industry Canada Compliance, and Regulatory Compliance Brazil

FCC Class B

This device complies with Part 15 of the FCC rules. Operation is subject to the following two conditions:

- This device may not cause harmful interference, and
- This device must accept any interference received, including interference that may cause undesired operation.

This equipment has been tested and found to comply with the limits for a Class B digital device, pursuant to Part 15 of the FCC Rules. These limits are designed to provide reasonable protection against harmful interference in a residential installation. This equipment generates, uses, and can radiate radio frequency energy and, if not installed and used in accordance with the Instructions, may cause harmful interference to radio communications. However, there is no guarantee that interference will not occur in a particular installation. If this equipment does cause harmful interference to radio or television reception, which can be determined by turning the equipment off and on, the user is encouraged to try to correct the interference by one or more of the following measures:

- Reorient or relocate the receiving antenna.
- Increase the separation between the equipment and receiver.
- Consult Landis+Gyr or an experienced radio technician for help.

WARNING: Changes or modifications to this device not expressly approved by Landis+Gyr could void the user's authority to operate the equipment.

RF Exposure

This equipment complies with FCC and ISED Canada radiation exposure limits set forth for an uncontrolled environment. This equipment should be installed and operated with minimum distance 27 cm between the radiator and your body. This transmitter must not be co-located or operated in conjunction with any other antenna or transmitter.

Cet équipement est conforme aux limites FCC/ISED Canada d'exposition aux radiations définies pour un environnement non contrôlé.

Cet équipement doit être installé et utilisé à une distance minimale de 27 cm entre le radiateur et votre corps.

Cet émetteur ne doit pas être co-implantés ou exploités en conjonction avec une autre antenne ou émetteur.

Industry Canada

This device complies with Industry Canada license-exempt RSS standard(s). Operation is subject to the following two conditions: (1) this device may not cause interference, and (2) this device must accept any interference, including interference that may cause undesired operation of the device.

Under Industry Canada regulations, this radio transmitter may only operate using an antenna of a type and maximum (or lesser) gain approved for the transmitter by Industry Canada. To reduce potential radio interference to other users, the antenna type and its gain should be so chosen that the equivalent isotropically radiated power (EIRP) is not more than that necessary for successful communication.

This radio transmitter (5294A-NG0R1S3) has been approved by Industry Canada to operate with the antenna types listed below with the maximum permissible gain and required antenna impedance for each antenna type indicated. Antenna types not included in this list, or having a gain greater than the maximum gain indicated for that type, are strictly prohibited for use with this device.

Approved Antennas:

- Landis+Gyr P/N 106119-000 Whip, 5.5dBi, 50 ohms
- PIFA (-3dBi) associated with Landis+Gyr Streetlight Controller: Certified for use ONLY in Landis+Gyr Streetlight Controller models 26-2494-1011 and 26-2498-2011
- PIFA (+3dBi) associated with Landis+Gyr S710 Line Sensor: Certified for use ONLY in Landis+Gyr Line Sensor model S710
- Slot (0dBi) associated with Landis+Gyr RF Load Control Switch: Certified for use ONLY in Landis+Gyr Load Control Switch models L532 (26-2549) and L534 (26-2505)

Le présent appareil est conforme aux CNR d'Industrie Canada applicables aux appareils radio exempts de licence. L'exploitation est autorisée aux deux conditions suivantes : (1) l'appareil ne doit pas produire de brouillage, et (2) l'utilisateur de l'appareil doit accepter tout brouillage radioélectrique subi, même si le brouillage est susceptible d'en compromettre le fonctionnement.

Conformément à la réglementation d'Industrie Canada, le présent émetteur radio peut fonctionner avec une antenne d'un type et d'un gain maximal (ou inférieur) approuvé pour l'émetteur par Industrie Canada. Dans le but de réduire les risques de brouillage radioélectrique à l'intention des autres utilisateurs, il faut choisir le type d'antenne et son gain de sorte que la puissance isotrope rayonnée équivalente (p.i.r.e.) ne dépasse pas l'intensité nécessaire à l'établissement d'une communication satisfaisante.

Le présent émetteur radio (5294A-NG0R1S3) a été approuvé par Industrie Canada pour fonctionner avec les types d'antenne énumérés ci-dessous et ayant un gain admissible maximal et l'impédance requise pour chaque type d'antenne. Les types d'antenne non inclus dans cette liste, ou dont le gain est supérieur au gain maximal indiqué, sont strictement interdits pour l'exploitation de l'émetteur.

Anatel

Este equipamento opera em caráter secundário, isto é, não tem direito a proteção contra interferência prejudicial, mesmo de estações do mesmo tipo, e não pode causar interferência a sistemas operando em caráter primário.

Host FCC Label Requirement

In the final installation, the following information must be visible:

- Contains FCC ID: R7PNG0R1S3
- Contains IC: 5294A-NG0R1S3
- Model: Network Node N500/N550

This device complies with Part 15 of the FCC rules. Operation is subject to the following two conditions:

- This device may not cause harmful interference.
- This device must accept any interference received, including interference that may cause undesired operation.