Series 5 Network Node N501 & N551

Data Sheet

Publication: 98-2386 Rev AA

© Landis+Gyr 2020 | Proprietary + Confidential

Landis+Gyr

Limitation on Warranties and Liability

Information in this document is subject to change without notice. This manual or any part of it thereof may not be reproduced in any form unless permitted by contract or by written permission of Landis+Gyr.

In no event will Landis+Gyr be liable for any incidental, indirect, special, or consequential damages (including lost profits) arising out of or relating to this publication or the information contained in it, even if Landis+Gyr has been advised, knew, or should have known of the possibility of such damages.

Covered by both issued and pending patents.
For further patent information see: https://www.landisgyr.com/about/patent-notices/

© 2020 Landis+Gyr, Inc. | Proprietary + Confidential

Contact Us:

To provide feedback about this document, email us at ustechnicaldocumentation@landisgyr.com

Technical Support: 1-888-390-5733 | solutionsupport.na@landisgyr.com

98-2386 Rev AA | Series 5 Network Node N551 Data Sheet | 7/9/2020

Series 5 Network Node N501 & N551 Data Sheet

Introduction

Landis+Gyr's Series 5 Network Node (RF Mesh - N501 & RF Mesh IP - 551) is key to building a single, integrated IoT network. This product is a fully-functional, Network Interface Card (NIC) that is mPCIe standard-enabled for simple network and sensor device integration. This technology is foundational to Landis+Gyr's industry-leading utility IoT networking solution, Gridstream® Connect. Further, the Series 5 Network Node provides the flexibility to grow the value of your IoT platform over time with proven Wi-SUN FAN interoperability as you integrate today's and future AMI or DA networking equipment and third-party IoT devices.

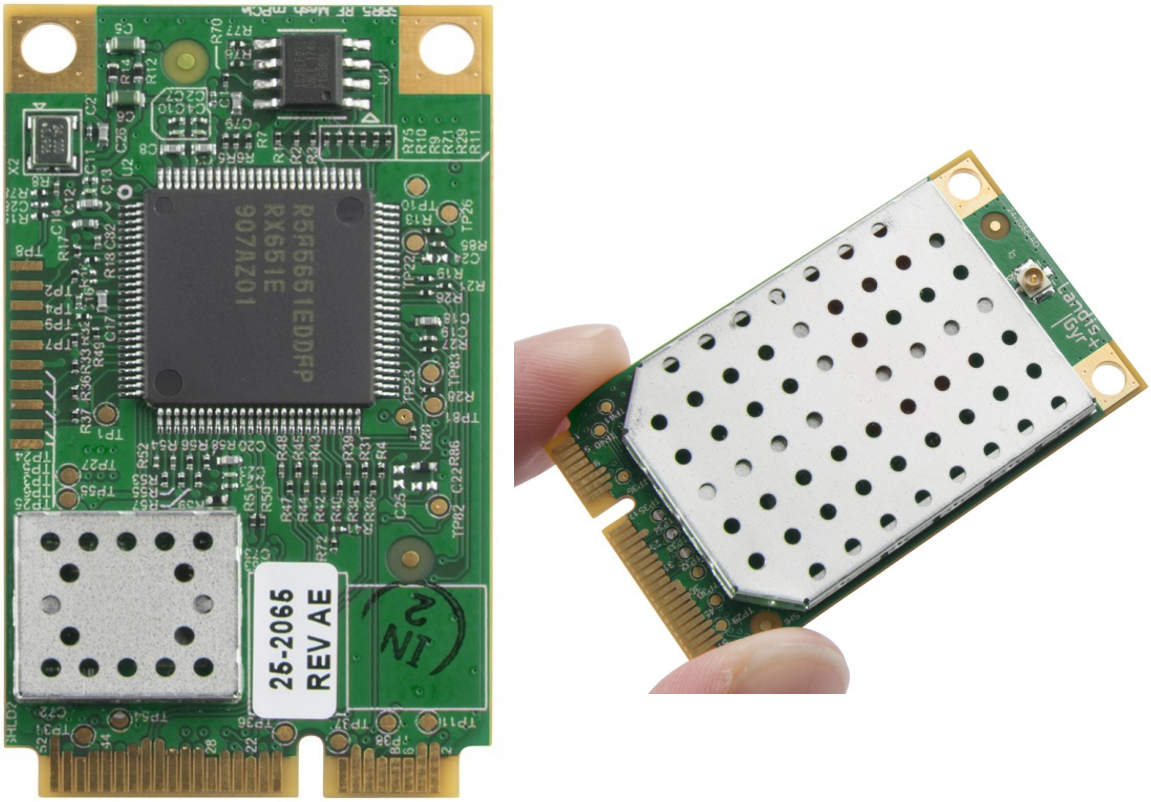

Figure 1. Series 5 Network Node N551

Table 1. Series 5 Network Node N551 Specification

Element	Description
Radio Model	Series 5 Network Node N551
Communication Protocol (PHY)	IEEE 802.15.4g, IEEE 802.15.4e, IPv6 (RPL & 6LoWPAN)
MAC/PHY Features	
MAC	Automatic selection of ‘best’ Modulation based on Link Quality
PHY	Adaptive Power Control (ie. Short range output power back-off) Precision Output Power Management Clear Channel Assessment
Hardware Capabilities	
Clock Speed	120 MHz
RAM Memory	640 Kb
FLASH Memory	2 MB + 4 MB External
RF Modulation	IEEE 802.15.4 SUN FSK
RF Bands	Sub-GHz
RF Port	Single 50Ω U.FL Male Connector
Sub-GHz Band Characteristics: North America	
Frequency Range (Fc)	902.4 MHz – 927.6 MHz
Channel Width	400 KHz
Number of Channels	64
Multicast Modulation	2-FSK 50 kbps
Unicast Modulation Support	2-FSK: 50 – 200 kbps
Data Rate Coverage	50 – 200 kbps
Transmitter Output Power	50 mW – 974 mW (peak)
Receiver Sensitivity (IEEE 802.15.4)	F2B50 = -107 dBm F2B150 = -101 dBm F2B200 = -100 dBm
Sub-GHz Band Characteristics: India	
Frequency Range (Fc)	865.1 MHz to 866.9 MHz
Channel Width	200 KHz
Number of Channels	10
Multicast Modulation	2-FSK 50 kbps
Unicast Modulation Support	2-FSK: 50 – 150 kbps
Data Rate Coverage	50 kbps – 150 kbps
Transmitter Output Power	50 mW – 974 mW (peak)
Receiver Sensitivity (IEEE 802.15.4)	F2B50 = -107 dBm F2B150 = -101 dBm
Sub-GHz Band Characteristics: Brazil	
Frequency Range (Fc)	902-907.5, 915-928 MHz
Channel Width	400 KHz

Table 1. Series 5 Network Node N551 Specification (Continued)

Element	Description
Number of Channels	44
Multicast Modulation	2-FSK 50 kbps
Unicast Modulation Support	2-FSK: 50 – 200 kbps
Data Rate Coverage	50 kbps – 150 kbps – 200 kbps
Transmitter Output Power	50 mW – 974 mW (peak)
Receiver Sensitivity (IEEE 802.15.4)	F2B50 = -107 dBm F2B150 = -101 dBm F2B200 = -100 dBm

Table 2. Series 5 Network Node N501 Specification

Element	Description
Radio Model	Series 5 Network Node N501
Communication Protocol (PHY)	RF Mesh IP (Proprietary)
MAC/PHY Features	
MAC	Automatic selection of ‘best’ Modulation based on Link Quality
PHY	Precision Output Power Management
Hardware Capabilities	
Clock Speed	120 MHz
RAM Memory	640 Kb
FLASH Memory	2 MB + 4 MB External
RF Modulation	2-FSK, 2-GFSK
RF Bands	Sub-GHz
RF Port	Single 50Ω U.FL Male Connector
Sub-GHz Band Characteristics: North America	
Frequency Range (Fc)	902.3 MHz – 927.8 MHz
Channel Width	100 KHz, 300 KHz
Number of Channels	239 (100KHz Ch width), 86 (300KHz Ch width)
Transmitter Output Power	50 mW – 974 mW (peak)
Receiver Sensitivity (10% PER, conducted)	9.6 kbps: -114 dBm
	19.2 kbps: -112 dBm
	19.2 (0.5) kbps: -111 dBm
	38.4 kbps: -109 dBm
	115.2 kbps: -104 dBm

Series 5 Network Node N551 Outline

The PCB outline is shown below.

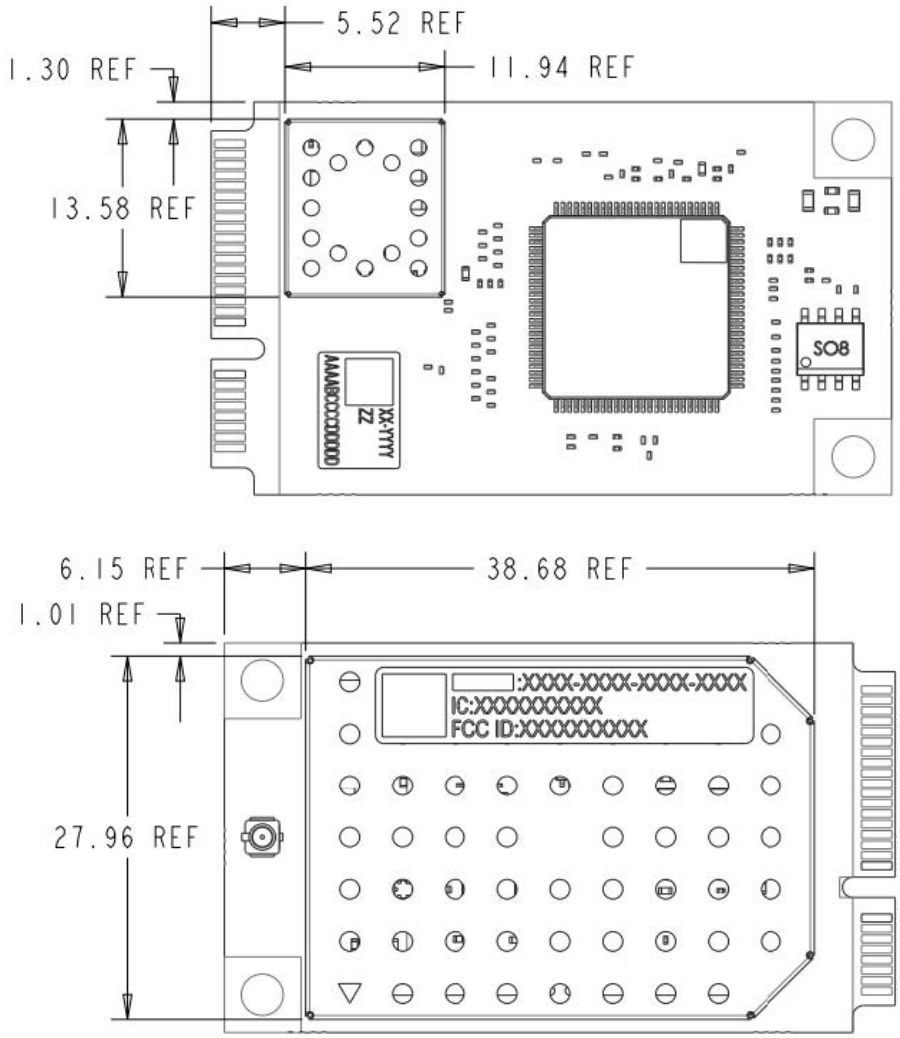

Figure 2. Board Outline 1

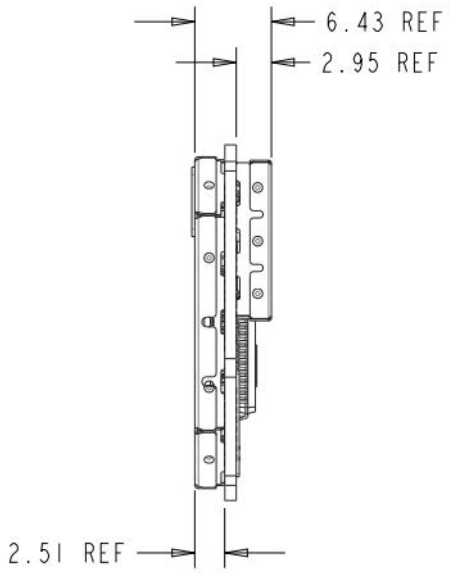

Figure 3. Board Outline 2

FCC, Industry Canada Compliance

FCC Class B

This device complies with Part 15 of the FCC rules. Operation is subject to the following two conditions:

- This device may not cause harmful interference, and
- This device must accept any interference received, including interference that may cause undesired operation.

This equipment has been tested and found to comply with the limits for a Class B digital device, pursuant to Part 15 of the FCC Rules. These limits are designed to provide reasonable protection against harmful interference in a residential installation. This equipment generates, uses, and can radiate radio frequency energy and, if not installed and used in accordance with the Instructions, may cause harmful interference to radio communications. However, there is no guarantee that interference will not occur in a particular installation. If this equipment does cause harmful interference to radio or television reception, which can be determined by turning the equipment off and on, the user is encouraged to try to correct the interference by one or more of the following measures:

- Reorient or relocate the receiving antenna.
- Increase the separation between the equipment and receiver.
- Consult Landis+Gyr or an experienced radio technician for help.

WARNING: Changes or modifications to this device not expressly approved by Landis+Gyr could void the user's authority to operate the equipment.

RF Exposure

This equipment complies with FCC radiation exposure limits set forth for an uncontrolled environment. This equipment should be installed and operated with minimum distance 33 cm between the radiator and your body. This transmitter must not be co-located or operating in conjunction with any other antenna or transmitter.

Cet équipement est conforme aux limites d'exposition aux radiations FCC définies pour un environnement non contrôlé. Cet équipement doit être installé et utilisé à une distance minimale de 33 cm entre le radiateur et votre corps. Cet émetteur ne doit pas être situé à proximité ou fonctionner en conjonction avec toute autre antenne ou émetteur.

Requirement for Modular Certification

N551 network node is approved for use with the antenna listed below. Antenna types not included in the list below or a having higher gain than the maximum indicated for that type, are prohibited for use with this device.

The antennas approved for use with the device:

- **Manufacturer**: Airgain
- **MPN**: ET960NPMR2
- **Type**: Dipole, omni-directional
- **Peak Antenna Gain**: 5.7 dBi

Information on Test Modes and Additional Testing Requirements

A diagnostic test mode is available to device integrators that allows control of the transmitter in order to execute FCC 15.247 compliance testing. This mode of operation provides a basic command interface over a dedicated serial port. Further information on how to enable this mode of operation and a description of the command interface is available to device integrators upon request and under NDA.

Additional Testing, Part 15 Subpart B Disclaimer

The end product with an embedded N551 Network Node may also need to pass the FCC Part 15 unintentional emission testing requirements and be properly authorized per FCC Part 15 Subpart B.

Industry Canada

This device complies with Industry Canada license-exempt RSS standard(s). Operation is subject to the following two conditions: (1) this device may not cause interference, and (2) this device must accept any interference, including interference that may cause undesired operation of the device.

Under Industry Canada regulations, this radio transmitter may only operate using an antenna of a type and maximum (or lesser) gain approved for the transmitter by Industry Canada. To reduce potential radio interference to other users, the antenna type and its gain should be so chosen that the equivalent isotropically radiated power (e.i.r.p.) is not more than that necessary for successful communication.

This radio transmitter (5294A-NG0R1S5) has been approved by Industry Canada to operate with the antenna types listed below with the maximum permissible gain and required antenna impedance for each antenna type indicated. Antenna types not included in this list, having a gain greater than the maximum gain indicated for that type, are strictly prohibited for use with this device.

Approved Antennas: Airgain, ET960NPMR2, Dipole, omni-directional, Peak gain: 5.7 dBi.

Le présent appareil est conforme aux CNR d'Industrie Canada applicables aux appareils radio exempts de licence. L'exploitation est autorisée aux deux conditions suivantes : (1) l'appareil ne doit pas produire de brouillage, et (2) l'utilisateur de l'appareil doit accepter tout brouillage radioélectrique subi, même si le brouillage est susceptible d'en compromettre le fonctionnement.

Conformément à la réglementation d'Industrie Canada, le présent émetteur radio peut fonctionner avec une antenne d'un type et d'un gain maximal (ou inférieur) approuvé pour l'émetteur par Industrie Canada. Dans le but de réduire les risques de brouillage radioélectrique à l'intention des autres utilisateurs, il faut choisir le type d'antenne et son gain de sorte que la puissance isotrope rayonnée équivalente (p.i.r.e.) ne dépasse pas l'intensité nécessaire à l'établissement d'une communication satisfaisante.

Le présent émetteur radio (5294A-NG0R1S5) a été approuvé par Industrie Canada pour fonctionner avec les types d'antenne énumérés ci-dessous et ayant un gain admissible maximal et l'impédance requise pour chaque type d'antenne. Les types d'antenne non inclus dans cette liste, ou dont le gain est supérieur au gain maximal indiqué, sont strictement interdits pour l'exploitation de l'émetteur.

Regulatory Compliance Brazil

Anatel

Este equipamento não tem direito à proteção contra interferência prejudicial e não pode causar interferência em sistemas devidamente autorizados.

Model: N551

ANATEL ID: 08239-19-10267

Host FCC Label Requirement

In the final installation, the following information must be visible:

- Contains FCC ID: R7PNG0R1S5
- Contains IC: 5294A-NG0R1S5
- Model: N551/N501

This device complies with Part 15 of the FCC rules. Operation is subject to the following two conditions:

- This device may not cause harmful interference.
- This device must accept any interference received, including interference that may cause undesired operation.