Test Laboratory: BTL.Inc Date: 2020/9/13

**System Check_H750_0913**

**DUT: Dipole 750 MHz D750V3;SN:1095;**

Communication System: UID 0, CW (0); Frequency: 750 MHz; Duty Cycle: 1:1
Medium parameters used: f = 750 MHz; σ = 0.883 S/m; $\varepsilon_r$ = 40.275; ρ = 1000 kg/m$^3$
Ambient Temperature: 23.3 ℃; Liquid Temperature: 22.5 ℃

DASY Configuration:

- Probe: ES3DV3 - SN3162; ConvF(6.14, 6.14, 6.14) @ 750 MHz; Calibrated: 2020/5/9
- Sensor-Surface: 3mm (Mechanical Surface Detection), z = 2.0, 32.0
- Electronics: DAE3 Sn420; Calibrated: 2020/6/22
- Phantom: SAM Right v5.0; Type: QD000P40CC; Serial: TP:1469
- DASY52 52.10.2(1495); SEMCAD X 14.6.12(7450)

**Area Scan (7x15x1):** Measurement grid: dx=15mm, dy=15mm
Maximum value of SAR (measured) = 2.50 W/kg

**Zoom Scan (5x5x7)/Cube 0:** Measurement grid: dx=8mm, dy=8mm, dz=5mm
Reference Value = 54.53 V/m; Power Drift = -0.01 dB
Peak SAR (extrapolated) = 3.24 W/kg
**SAR(1 g) = 2.13 W/kg; SAR(10 g) = 1.4 W/kg**
Maximum value of SAR (measured) = 2.50 W/kg

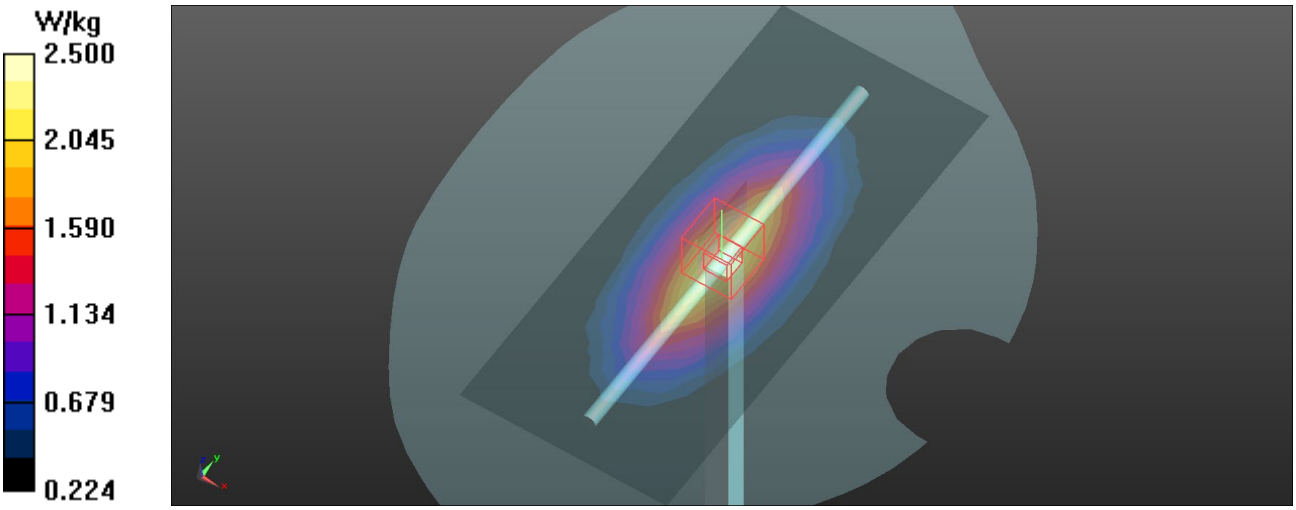

Test Laboratory: BTL.Inc Date: 2020/9/14

**System Check_H750_0914**

**DUT: Dipole 750 MHz D750V3;SN:1095;**

Communication System: UID 0, CW (0); Frequency: 750 MHz; Duty Cycle: 1:1
Medium parameters used: f = 750 MHz; $\sigma$ = 0.881 S/m; $\varepsilon_r$ = 40.295; $\rho$ = 1000 kg/m$^3$
Ambient Temperature: 23.3 ℃; Liquid Temperature: 22.3 ℃

DASY Configuration:

- Probe: ES3DV3 - SN3162; ConvF(6.14, 6.14, 6.14) @ 750 MHz; Calibrated: 2020/5/9
- Sensor-Surface: 3mm (Mechanical Surface Detection), z = 2.0, 32.0
- Electronics: DAE3 Sn420; Calibrated: 2020/6/22
- Phantom: SAM Right v5.0; Type: QD000P40CC; Serial: TP:1469
- DASY52 52.10.2(1495); SEMCAD X 14.6.12(7450)

**Area Scan (7x15x1):** Measurement grid: dx=15mm, dy=15mm
Maximum value of SAR (measured) = 2.43 W/kg

**Zoom Scan (5x5x7)/Cube 0:** Measurement grid: dx=8mm, dy=8mm, dz=5mm
Reference Value = 53.84 V/m; Power Drift = -0.02 dB
Peak SAR (extrapolated) = 3.15 W/kg
**SAR(1 g) = 2.07 W/kg; SAR(10 g) = 1.36 W/kg**
Maximum value of SAR (measured) = 2.43 W/kg

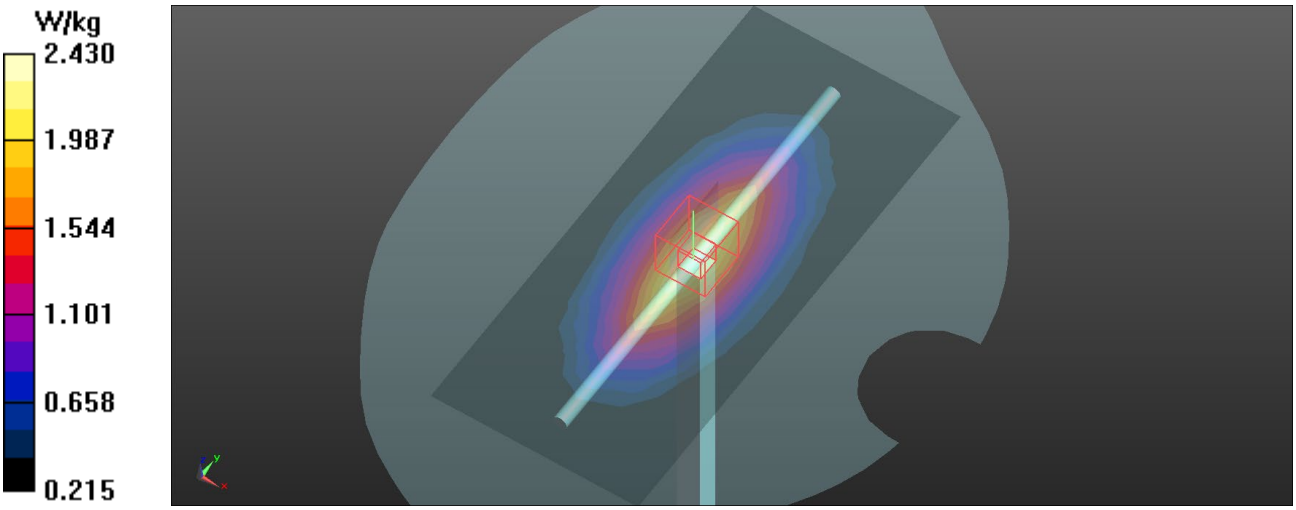

Test Laboratory: BTL.Inc Date: 2020/9/14

**System Check_H750_0914**

**DUT: Dipole 750 MHz D750V3;SN:1095;**

Communication System: UID 0, CW (0); Frequency: 750 MHz; Duty Cycle: 1:1
Medium parameters used: f = 750 MHz; σ = 0.881 S/m; $\varepsilon_r$ = 40.295; ρ = 1000 kg/m$^3$
Ambient Temperature: 23.3 ℃; Liquid Temperature: 22.3 ℃

DASY Configuration:

- Probe: EX3DV4 - SN7383; ConvF(10.65, 10.65, 10.65) @ 750 MHz; Calibrated: 2020/1/3
- Sensor-Surface: 1.4mm (Mechanical Surface Detection), z = 1.0, 31.0
- Electronics: DAE3 Sn420; Calibrated: 2020/6/22
- Phantom: SAM Right v5.0; Type: QD000P40CC; Serial: TP:1469
- DASY52 52.10.2(1495); SEMCAD X 14.6.12(7450)

**Area Scan (7x15x1):** Measurement grid: dx=15mm, dy=15mm
Maximum value of SAR (measured) = 2.32 W/kg

**Zoom Scan (5x5x7)/Cube 0:** Measurement grid: dx=8mm, dy=8mm, dz=5mm
Reference Value = 57.51 V/m; Power Drift = -0.18 dB
Peak SAR (extrapolated) = 3.16 W/kg
**SAR(1 g) = 2.12 W/kg; SAR(10 g) = 1.39 W/kg**
Maximum value of SAR (measured) = 2.28 W/kg

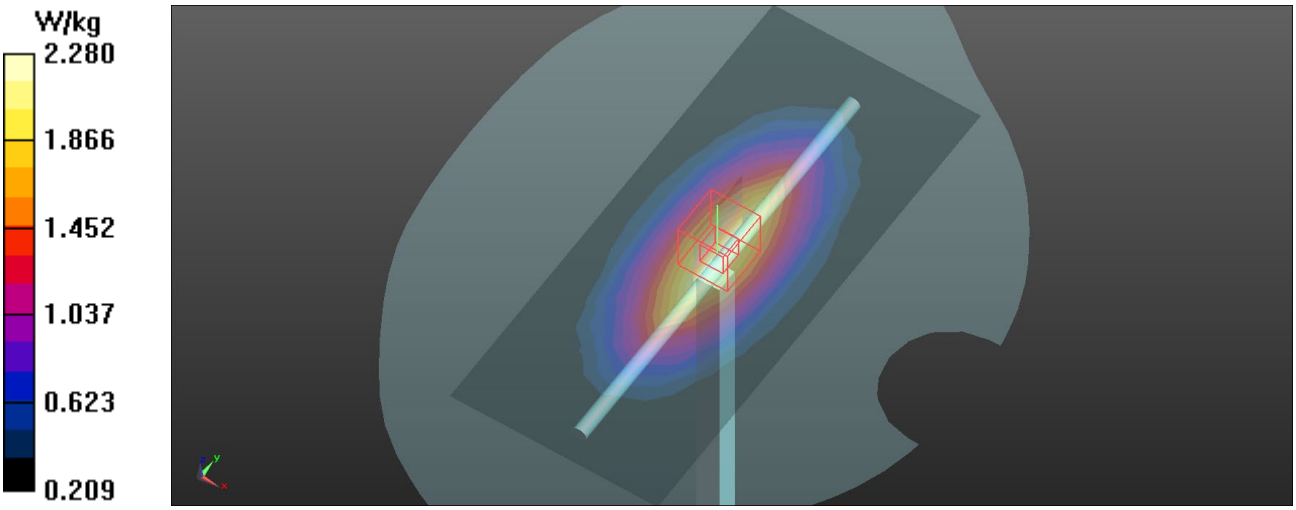

Test Laboratory: BTL.Inc Date: 2020/9/3

**System Check_H835_0903**

**DUT: Dipole 835 MHz D835V2;SN:4d160;**

Communication System: UID 0, CW (0); Frequency: 835 MHz; Duty Cycle: 1:1
Medium parameters used: f = 835 MHz; σ = 0.884 S/m; $\varepsilon_r$ = 43.34; ρ = 1000 kg/m$^3$
Ambient Temperature: 23.2 ℃; Liquid Temperature: 22.4 ℃

DASY Configuration:

- Probe: EX3DV4 - SN7544; ConvF(10.14, 10.14, 10.14) @ 835 MHz; Calibrated: 2019/9/9
- Sensor-Surface: 1.4mm (Mechanical Surface Detection), z = 1.0, 31.0
- Electronics: DAE4 Sn1390; Calibrated: 2019/10/29
- Phantom: SAM Left v5.0; Type: Twin SAM; Serial: TP:1896
- DASY52 52.10.2(1495); SEMCAD X 14.6.12(7450)

**Area Scan (7x13x1):** Measurement grid: dx=15mm, dy=15mm
Maximum value of SAR (measured) = 3.30 W/kg

**Zoom Scan (5x5x7)/Cube 0:** Measurement grid: dx=8mm, dy=8mm, dz=5mm
Reference Value = 62.72 V/m; Power Drift = -0.04 dB
Peak SAR (extrapolated) = 3.89 W/kg
**SAR(1 g) = 2.32 W/kg; SAR(10 g) = 1.44 W/kg**
Maximum value of SAR (measured) = 3.33 W/kg

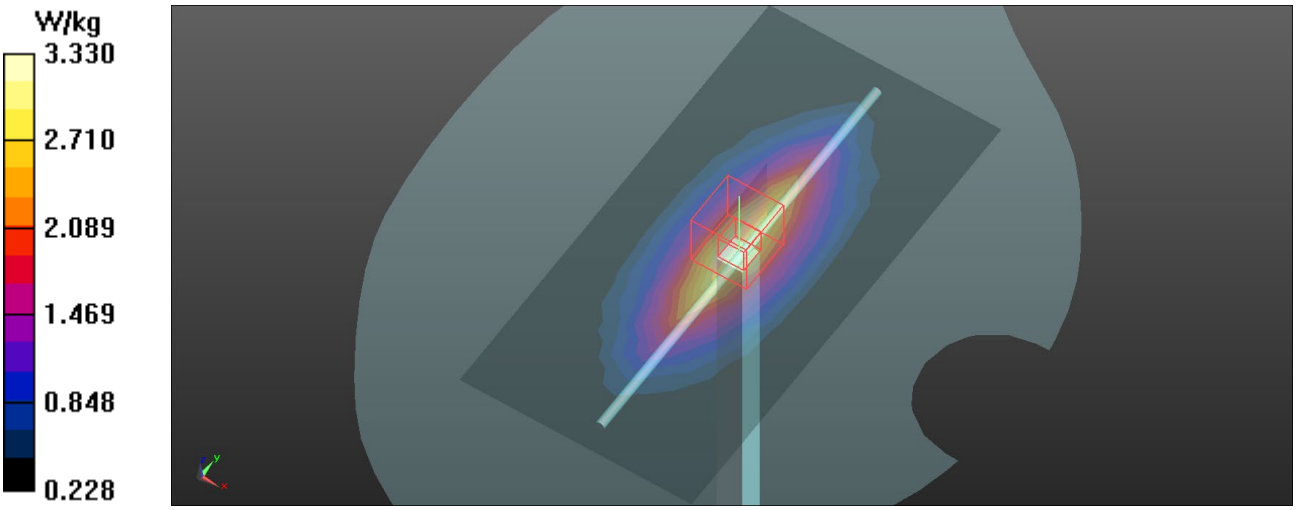

Test Laboratory: BTL.Inc Date: 2020/9/4

**System Check_H835_0904**

**DUT: Dipole 835 MHz D835V2;SN:4d160;**

Communication System: UID 0, CW (0); Frequency: 835 MHz; Duty Cycle: 1:1
Medium parameters used: f = 835 MHz; $\sigma$ = 0.884 S/m; $\varepsilon_r$ = 43.341; $\rho$ = 1000 kg/m$^3$
Ambient Temperature: 23.2 ℃; Liquid Temperature: 22.5 ℃

DASY Configuration:

- Probe: ES3DV3 - SN3162; ConvF(5.95, 5.95, 5.95) @ 835 MHz; Calibrated: 2020/5/9
- Sensor-Surface: 3mm (Mechanical Surface Detection), z = 2.0, 32.0
- Electronics: DAE3 Sn420; Calibrated: 2020/6/22
- Phantom: SAM Left v5.0; Type: Twin SAM; Serial: TP:1896
- DASY52 52.10.2(1495); SEMCAD X 14.6.12(7450)

**Area Scan (7x13x1):** Measurement grid: dx=15mm, dy=15mm
Maximum value of SAR (measured) = 2.89 W/kg

**Zoom Scan (5x5x7)/Cube 0:** Measurement grid: dx=8mm, dy=8mm, dz=5mm
Reference Value = 58.78 V/m; Power Drift = -0.04 dB
Peak SAR (extrapolated) = 3.95 W/kg
**SAR(1 g) = 2.42 W/kg; SAR(10 g) = 1.5 W/kg**
Maximum value of SAR (measured) = 2.92 W/kg

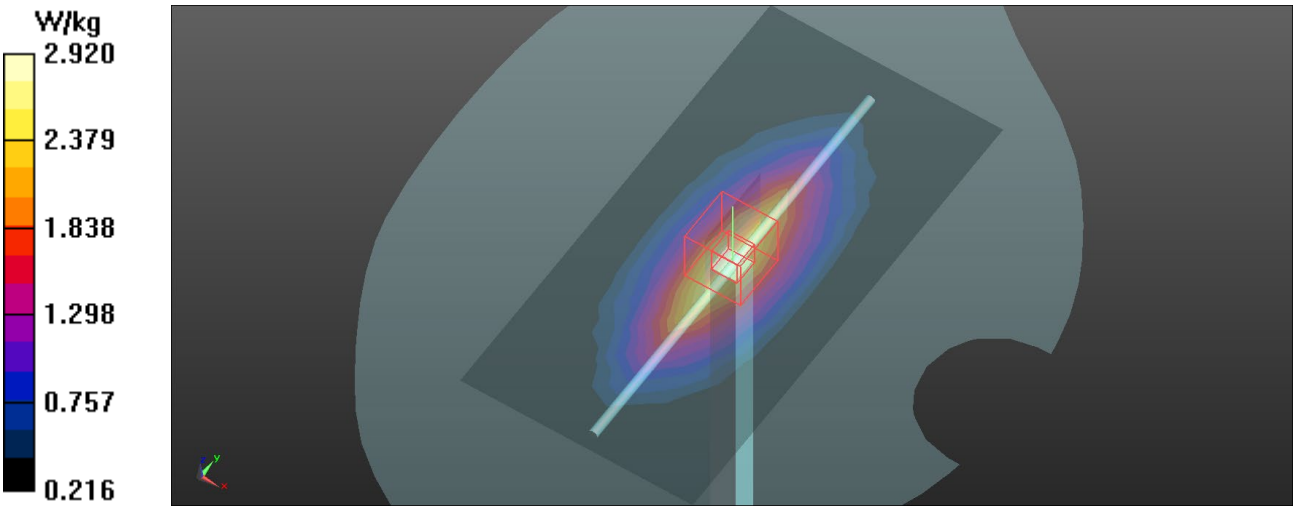

Test Laboratory: BTL.Inc Date: 2020/9/5

**System Check_H835_0905**

**DUT: Dipole 835 MHz D835V2;SN:4d160;**

Communication System: UID 0, CW (0); Frequency: 835 MHz; Duty Cycle: 1:1
Medium parameters used: f = 835 MHz; $\sigma$ = 0.884 S/m; $\varepsilon_r$ = 43.347; $\rho$ = 1000 kg/m$^3$
Ambient Temperature: 23.1 ℃; Liquid Temperature: 22.3 ℃

DASY Configuration:

- Probe: ES3DV3 - SN3162; ConvF(5.95, 5.95, 5.95) @ 835 MHz; Calibrated: 2020/5/9
- Sensor-Surface: 3mm (Mechanical Surface Detection), z = 2.0, 32.0
- Electronics: DAE3 Sn420; Calibrated: 2020/6/22
- Phantom: SAM Left v5.0; Type: Twin SAM; Serial: TP:1896
- DASY52 52.10.2(1495); SEMCAD X 14.6.12(7450)

**Area Scan (7x13x1):** Measurement grid: dx=15mm, dy=15mm
Maximum value of SAR (measured) = 2.85 W/kg

**Zoom Scan (5x5x7)/Cube 0:** Measurement grid: dx=8mm, dy=8mm, dz=5mm
Reference Value = 65.34 V/m; Power Drift = -0.01 dB
Peak SAR (extrapolated) = 3.85 W/kg
**SAR(1 g) = 2.37 W/kg; SAR(10 g) = 1.47 W/kg**
Maximum value of SAR (measured) = 2.85 W/kg

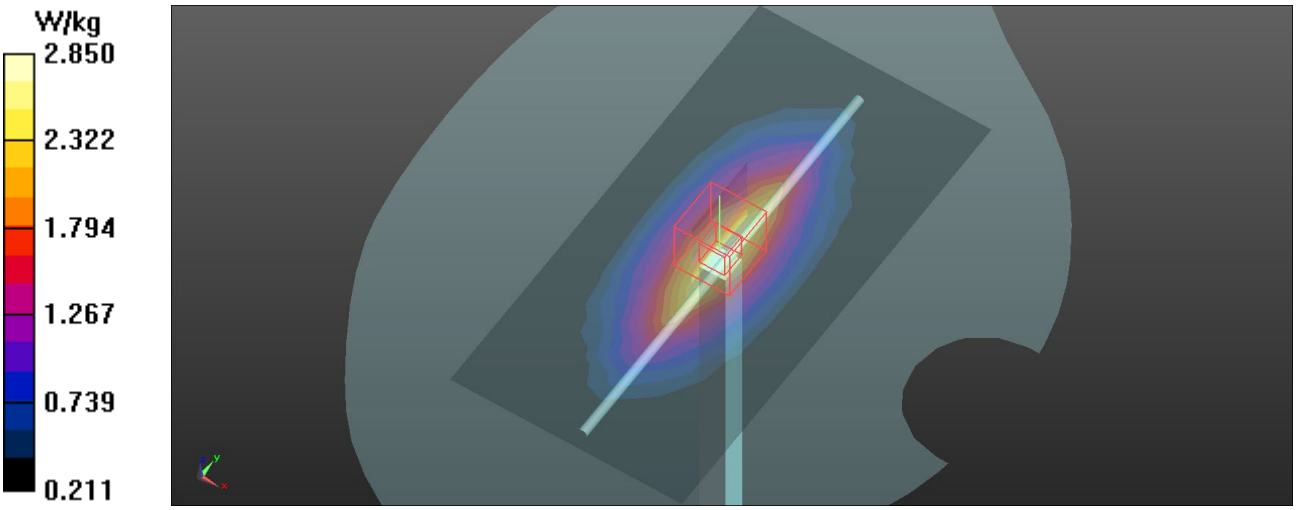

Test Laboratory: BTL.Inc Date: 2020/9/2

**System Check_H1750_0902**

**DUT: Dipole 1750 MHz D1750V2;SN:1101;**

Communication System: UID 0, CW (0); Frequency: 1750 MHz; Duty Cycle: 1:1
Medium parameters used: f = 1750 MHz; σ = 1.324 S/m; $\varepsilon_r$ = 41.053; ρ = 1000 kg/m$^3$
Ambient Temperature: 23.2 ℃; Liquid Temperature: 22.1 ℃

DASY Configuration:

- Probe: ES3DV3 - SN3162; ConvF(5.22, 5.22, 5.22) @ 1750 MHz; Calibrated: 2020/5/9
- Sensor-Surface: 3mm (Mechanical Surface Detection), z = 2.0, 32.0
- Electronics: DAE3 Sn420; Calibrated: 2020/6/22
- Phantom: SAM Right v5.0; Type: QD000P40CC; Serial: TP:1469
- DASY52 52.10.2(1495); SEMCAD X 14.6.12(7450)

**Area Scan (6x8x1):** Measurement grid: dx=15mm, dy=15mm
Maximum value of SAR (measured) = 10.2 W/kg

**Zoom Scan (5x5x7)/Cube 0:** Measurement grid: dx=8mm, dy=8mm, dz=5mm
Reference Value = 101.3 V/m; Power Drift = -0.01 dB
Peak SAR (extrapolated) = 16.3 W/kg
**SAR(1 g) = 9.16 W/kg; SAR(10 g) = 4.92 W/kg**
Maximum value of SAR (measured) = 11.5 W/kg

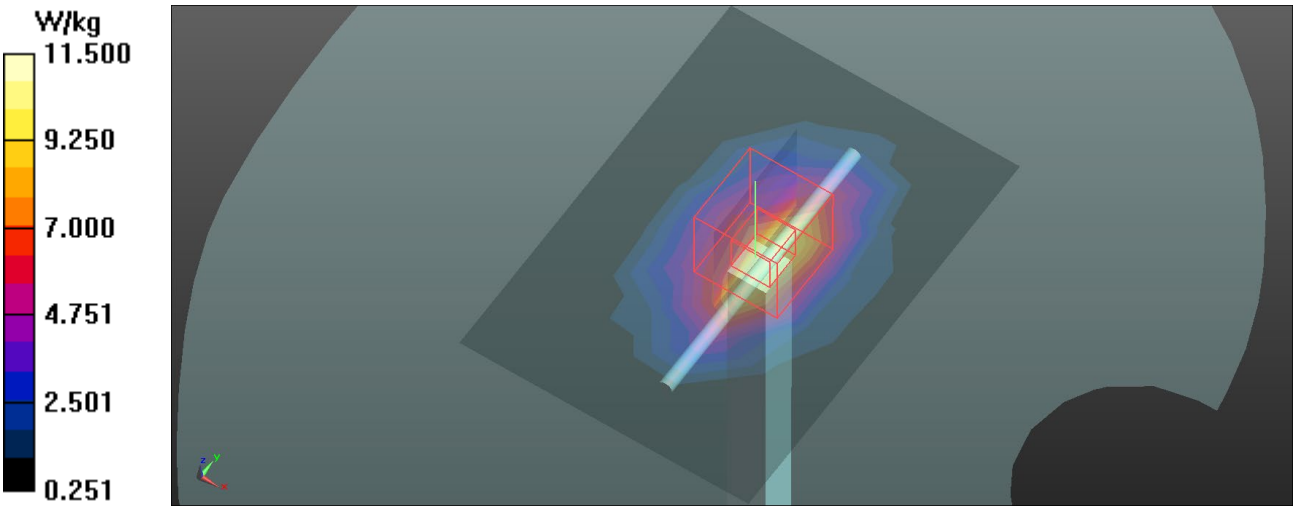

Test Laboratory: BTL.Inc Date: 2020/9/9

**System Check_H1750_0909**

**DUT: Dipole 1750 MHz D1750V2;SN:1101;**

Communication System: UID 0, CW (0); Frequency: 1750 MHz; Duty Cycle: 1:1
Medium parameters used: f = 1750 MHz; σ = 1.324 S/m; $\varepsilon_r$ = 41.008; ρ = 1000 kg/m$^3$
Ambient Temperature: 23.1 ℃; Liquid Temperature: 22.0 ℃

DASY Configuration:

- Probe: ES3DV3 - SN3162; ConvF(5.22, 5.22, 5.22) @ 1750 MHz; Calibrated: 2020/5/9
- Sensor-Surface: 3mm (Mechanical Surface Detection), z = 2.0, 32.0
- Electronics: DAE3 Sn420; Calibrated: 2020/6/22
- Phantom: SAM Right v5.0; Type: QD000P40CC; Serial: TP:1469
- DASY52 52.10.2(1495); SEMCAD X 14.6.12(7450)

**Area Scan (6x8x1):** Measurement grid: dx=15mm, dy=15mm
Maximum value of SAR (measured) = 10.2 W/kg

**Zoom Scan (5x5x7)/Cube 0:** Measurement grid: dx=8mm, dy=8mm, dz=5mm
Reference Value = 101.3 V/m; Power Drift = -0.01 dB
Peak SAR (extrapolated) = 16.3 W/kg
**SAR(1 g) = 9.1 W/kg; SAR(10 g) = 4.88 W/kg**
Maximum value of SAR (measured) = 11.5 W/kg

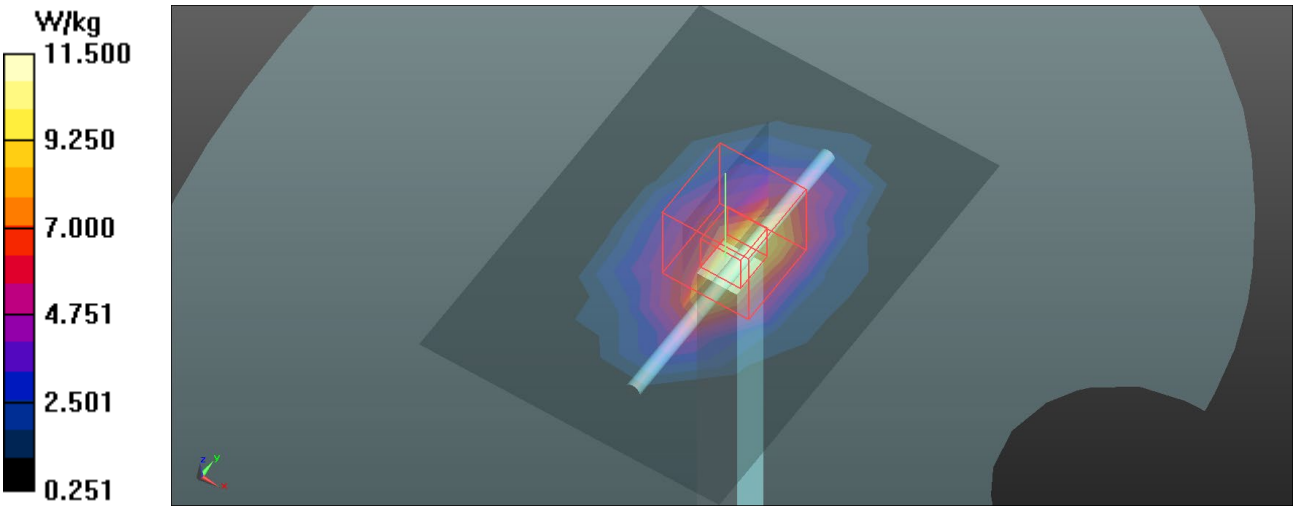

Test Laboratory: BTL.Inc Date: 2020/9/11

**System Check_H1750_0911**

**DUT: Dipole 1750 MHz D1750V2;SN:1101;**

Communication System: UID 0, CW (0); Frequency: 1750 MHz; Duty Cycle: 1:1
Medium parameters used: f = 1750 MHz; σ = 1.324 S/m; $\varepsilon_r$ = 41.075; ρ = 1000 kg/m$^3$
Ambient Temperature: 23.2 ℃; Liquid Temperature: 22.3 ℃

DASY Configuration:

- Probe: ES3DV3 - SN3162; ConvF(5.22, 5.22, 5.22) @ 1750 MHz; Calibrated: 2020/5/9
- Sensor-Surface: 3mm (Mechanical Surface Detection), z = 2.0, 32.0
- Electronics: DAE3 Sn420; Calibrated: 2020/6/22
- Phantom: SAM Right v5.0; Type: QD000P40CC; Serial: TP:1469
- DASY52 52.10.2(1495); SEMCAD X 14.6.12(7450)

**Area Scan (6x8x1):** Measurement grid: dx=15mm, dy=15mm
Maximum value of SAR (measured) = 10.2 W/kg

**Zoom Scan (5x5x7)/Cube 0:** Measurement grid: dx=8mm, dy=8mm, dz=5mm
Reference Value = 104.0 V/m; Power Drift = -0.15 dB
Peak SAR (extrapolated) = 16.6 W/kg
**SAR(1 g) = 9.3 W/kg; SAR(10 g) = 5 W/kg**
Maximum value of SAR (measured) = 11.7 W/kg

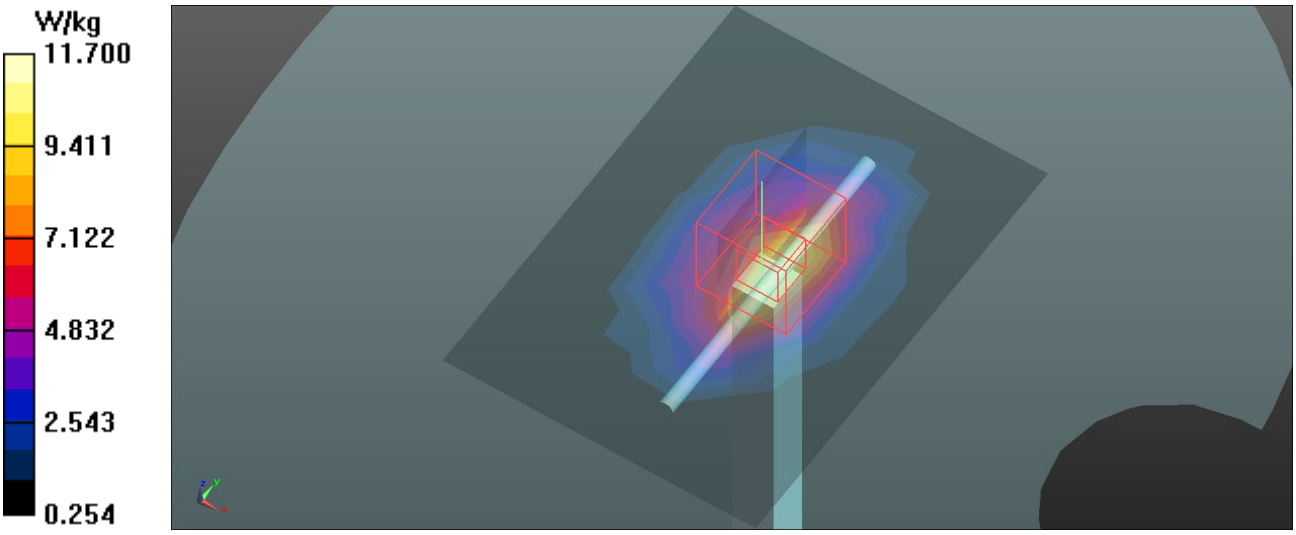

Test Laboratory: BTL.Inc Date: 2020/9/12

**System Check_H1750_0912**

**DUT: Dipole 1750 MHz D1750V2;SN:1101;**

Communication System: UID 0, CW (0); Frequency: 1750 MHz; Duty Cycle: 1:1
Medium parameters used: f = 1750 MHz; σ = 1.324 S/m; $\varepsilon_r$ = 41.06; ρ = 1000 kg/m$^3$
Ambient Temperature: 23.2 ℃; Liquid Temperature: 22.4 ℃

DASY Configuration:

- Probe: ES3DV3 - SN3162; ConvF(5.22, 5.22, 5.22) @ 1750 MHz; Calibrated: 2020/5/9
- Sensor-Surface: 3mm (Mechanical Surface Detection), z = 2.0, 32.0
- Electronics: DAE3 Sn420; Calibrated: 2020/6/22
- Phantom: SAM Right v5.0; Type: QD000P40CC; Serial: TP:1469
- DASY52 52.10.2(1495); SEMCAD X 14.6.12(7450)

**Area Scan (6x8x1):** Measurement grid: dx=15mm, dy=15mm
Maximum value of SAR (measured) = 9.92 W/kg

**Zoom Scan (5x5x7)/Cube 0:** Measurement grid: dx=8mm, dy=8mm, dz=5mm
Reference Value = 100.7 V/m; Power Drift = 0.00 dB
Peak SAR (extrapolated) = 16.0 W/kg
**SAR(1 g) = 9 W/kg; SAR(10 g) = 4.84 W/kg**
Maximum value of SAR (measured) = 11.3 W/kg

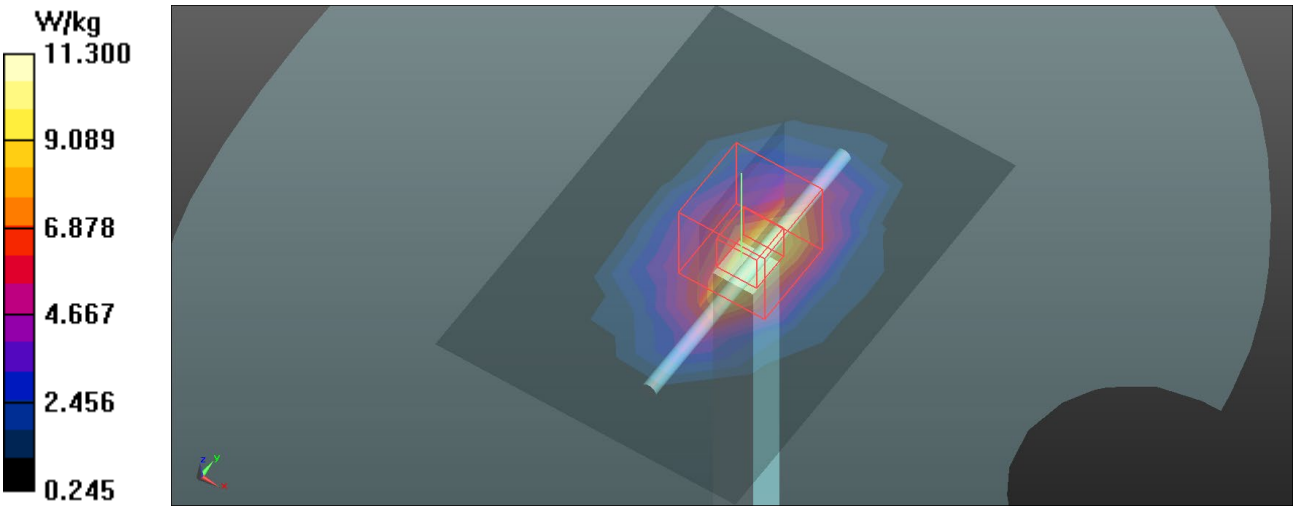

Test Laboratory: BTL.Inc Date: 2020/9/2

**System Check_H1900_0902**

**DUT: Dipole 1900 MHz D1900V2;SN:5d179;**

Communication System: UID 0, CW (0); Frequency: 1900 MHz; Duty Cycle: 1:1
Medium parameters used: f = 1900 MHz; σ = 1.459 S/m; $\varepsilon_r$ = 40.562; ρ = 1000 kg/m$^3$
Ambient Temperature: 23.2 ℃; Liquid Temperature: 22.1 ℃

DASY Configuration:

- Probe: EX3DV4 - SN7544; ConvF(8.26, 8.26, 8.26) @ 1900 MHz; Calibrated: 2019/9/9
- Sensor-Surface: 1.4mm (Mechanical Surface Detection), z = 1.0, 31.0
- Electronics: DAE4 Sn1390; Calibrated: 2019/10/29
- Phantom: SAM Left v5.0; Type: Twin SAM; Serial: TP:1896
- DASY52 52.10.2(1495); SEMCAD X 14.6.12(7450)

**Area Scan (6x8x1):** Measurement grid: dx=15mm, dy=15mm
Maximum value of SAR (measured) = 10.4 W/kg

**Zoom Scan (5x5x7)/Cube 0:** Measurement grid: dx=8mm, dy=8mm, dz=5mm
Reference Value = 105.7 V/m; Power Drift = -0.02 dB
Peak SAR (extrapolated) = 18.4 W/kg
**SAR(1 g) = 10.1 W/kg; SAR(10 g) = 5.27 W/kg**
Maximum value of SAR (measured) = 12.9 W/kg

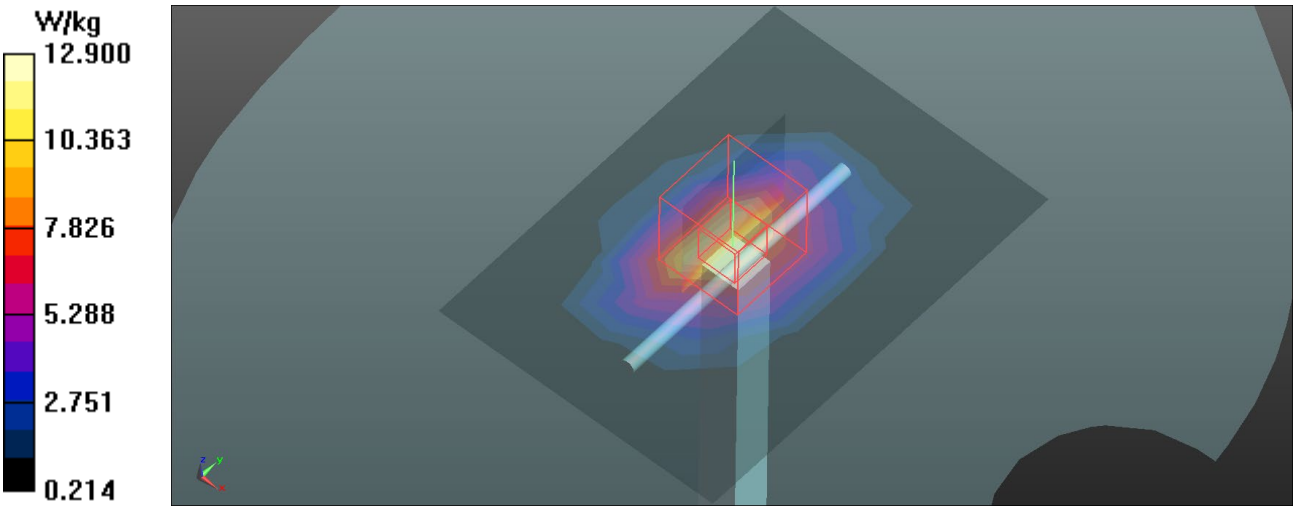

Test Laboratory: BTL.Inc Date: 2020/9/2

**System Check_H1900_0902**

**DUT: Dipole 1900 MHz D1900V2;SN:5d179;**

Communication System: UID 0, CW (0); Frequency: 1900 MHz; Duty Cycle: 1:1
Medium parameters used: f = 1900 MHz; σ = 1.459 S/m; $\varepsilon_r$ = 40.572; ρ = 1000 kg/m$^3$
Ambient Temperature: 23.2 ℃; Liquid Temperature: 22.2 ℃

DASY Configuration:

- Probe: ES3DV3 - SN3162; ConvF(4.97, 4.97, 4.97) @ 1900 MHz; Calibrated: 2020/5/9
- Sensor-Surface: 3mm (Mechanical Surface Detection), z = 2.0, 32.0
- Electronics: DAE3 Sn420; Calibrated: 2020/6/22
- Phantom: SAM Right v5.0; Type: QD000P40CC; Serial: TP:1469
- DASY52 52.10.2(1495); SEMCAD X 14.6.12(7450)

**Area Scan (6x8x1):** Measurement grid: dx=15mm, dy=15mm
Maximum value of SAR (measured) = 10.5 W/kg

**Zoom Scan (5x5x7)/Cube 0:** Measurement grid: dx=8mm, dy=8mm, dz=5mm
Reference Value = 106.0 V/m; Power Drift = -0.02 dB
Peak SAR (extrapolated) = 18.5 W/kg
**SAR(1 g) = 10.16 W/kg; SAR(10 g) = 5.3 W/kg**
Maximum value of SAR (measured) = 12.9 W/kg

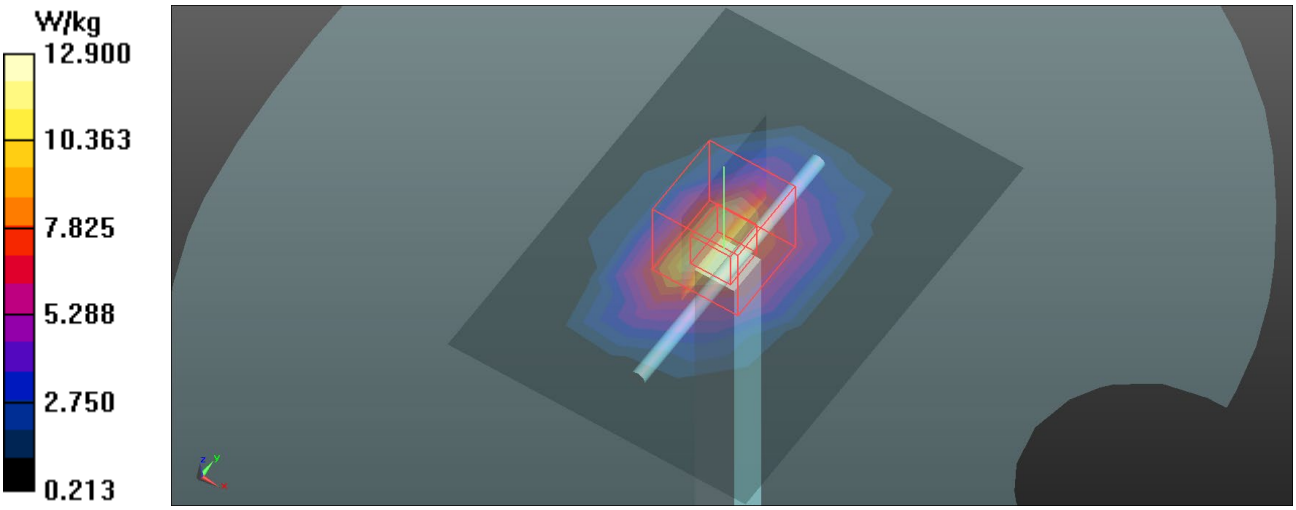

Test Laboratory: BTL.Inc Date: 2020/9/10

**System Check_H1900_0910**

**DUT: Dipole 1900 MHz D1900V2;SN:5d179;**

Communication System: UID 0, CW (0); Frequency: 1900 MHz; Duty Cycle: 1:1
Medium parameters used: f = 1900 MHz; σ = 1.459 S/m; $\varepsilon_r$ = 40.498; ρ = 1000 kg/m$^3$
Ambient Temperature: 23.1 ℃; Liquid Temperature: 22.4 ℃

DASY Configuration:

- Probe: ES3DV3 - SN3162; ConvF(4.97, 4.97, 4.97) @ 1900 MHz; Calibrated: 2020/5/9
- Sensor-Surface: 3mm (Mechanical Surface Detection), z = 2.0, 32.0
- Electronics: DAE3 Sn420; Calibrated: 2020/6/22
- Phantom: SAM Right v5.0; Type: QD000P40CC; Serial: TP:1469
- DASY52 52.10.2(1495); SEMCAD X 14.6.12(7450)

**Area Scan (6x8x1):** Measurement grid: dx=15mm, dy=15mm
Maximum value of SAR (measured) = 10.5 W/kg

**Zoom Scan (5x5x7)/Cube 0:** Measurement grid: dx=8mm, dy=8mm, dz=5mm
Reference Value = 106.0 V/m; Power Drift = -0.02 dB
Peak SAR (extrapolated) = 18.5 W/kg
**SAR(1 g) = 10.14 W/kg; SAR(10 g) = 5.32 W/kg**
Maximum value of SAR (measured) = 13.0 W/kg

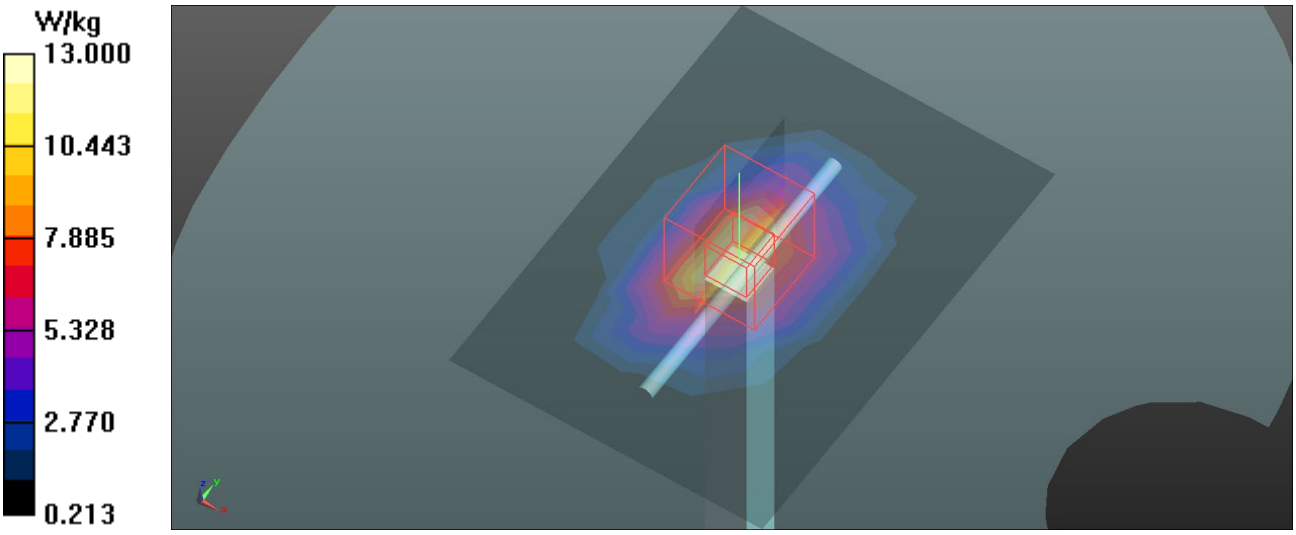

Test Laboratory: BTL.Inc Date: 2020/9/11

**System Check_H1900_0911**

**DUT: Dipole 1900 MHz D1900V2;SN:5d179;**

Communication System: UID 0, CW (0); Frequency: 1900 MHz; Duty Cycle: 1:1
Medium parameters used: f = 1900 MHz; σ = 1.46 S/m; $\varepsilon_r$ = 40.584; ρ = 1000 kg/m$^3$
Ambient Temperature: 23.2 ℃; Liquid Temperature: 22.3 ℃

DASY Configuration:

- Probe: ES3DV3 - SN3162; ConvF(4.97, 4.97, 4.97) @ 1900 MHz; Calibrated: 2020/5/9
- Sensor-Surface: 3mm (Mechanical Surface Detection), z = 2.0, 32.0
- Electronics: DAE3 Sn420; Calibrated: 2020/6/22
- Phantom: SAM Right v5.0; Type: QD000P40CC; Serial: TP:1469
- DASY52 52.10.2(1495); SEMCAD X 14.6.12(7450)

**Area Scan (6x7x1):** Measurement grid: dx=15mm, dy=15mm
Maximum value of SAR (measured) = 8.62 W/kg

**Zoom Scan (5x5x7)/Cube 0:** Measurement grid: dx=8mm, dy=8mm, dz=5mm
Reference Value = 101.8 V/m; Power Drift = -0.01 dB
Peak SAR (extrapolated) = 18.9 W/kg
**SAR(1 g) = 10.2 W/kg; SAR(10 g) = 5.29 W/kg**
Maximum value of SAR (measured) = 11.4 W/kg

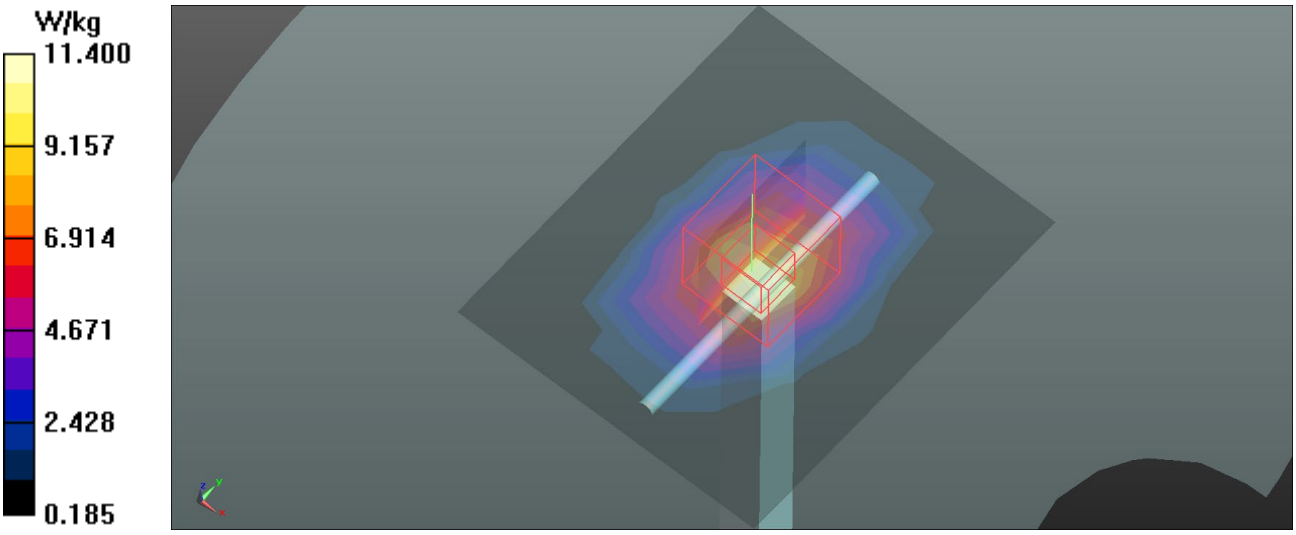

Test Laboratory: BTL.Inc Date: 2020/9/12

**System Check_H2450_0912**

**DUT: Dipole 2450 MHz D2450V2;SN:919;**

Communication System: UID 0, CW (0); Frequency: 2450 MHz; Duty Cycle: 1:1
Medium parameters used (interpolated): f = 2450 MHz; $\sigma$ = 1.757 S/m; $\varepsilon_r$ = 38.57; $\rho$ = 1000 kg/m$^3$
Ambient Temperature: 22.9 ℃; Liquid Temperature: 22.1 ℃

DASY Configuration:

- Probe: ES3DV3 - SN3162; ConvF(4.54, 4.54, 4.54) @ 2450 MHz; Calibrated: 2020/5/9
- Sensor-Surface: 3mm (Mechanical Surface Detection), z = 2.0, 32.0
- Electronics: DAE3 Sn420; Calibrated: 2020/6/22
- Phantom: SAM Right v5.0; Type: QD000P40CC; Serial: TP:1469
- DASY52 52.10.2(1495); SEMCAD X 14.6.12(7450)

**Area Scan (9x9x1):** Measurement grid: dx=12mm, dy=12mm
Maximum value of SAR (measured) = 14.4 W/kg

**Zoom Scan (7x7x7)/Cube 0:** Measurement grid: dx=5mm, dy=5mm, dz=5mm
Reference Value = 96.79 V/m; Power Drift = 0.00 dB
Peak SAR (extrapolated) = 24.2 W/kg
**SAR(1 g) = 12.4 W/kg; SAR(10 g) = 6 W/kg**
Maximum value of SAR (measured) = 15.5 W/kg

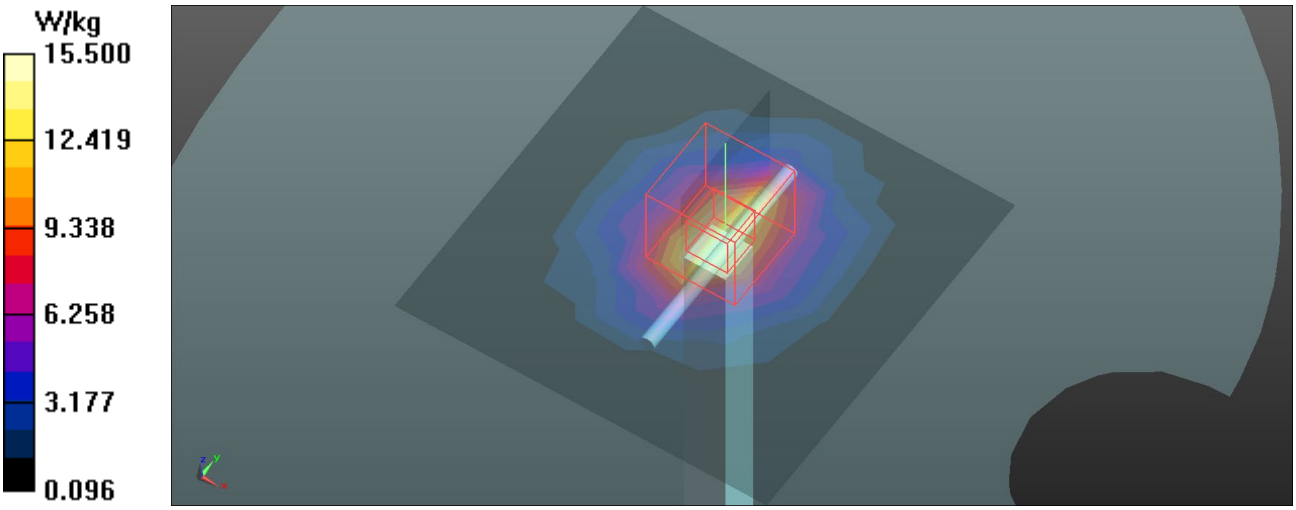

Test Laboratory: BTL.Inc Date: 2020/9/18

**System Check_H2450_0918**

**DUT: Dipole 2450 MHz D2450V2;SN:919;**

Communication System: UID 0, CW (0); Frequency: 2450 MHz; Duty Cycle: 1:1
Medium parameters used (interpolated): f = 2450 MHz; σ = 1.757 S/m; $\varepsilon_r$ = 38.587; ρ = 1000 kg/m$^3$
Ambient Temperature: 23.1 ℃; Liquid Temperature: 22.2 ℃

DASY Configuration:

- Probe: ES3DV3 - SN3162; ConvF(4.54, 4.54, 4.54) @ 2450 MHz; Calibrated: 2020/5/9
- Sensor-Surface: 3mm (Mechanical Surface Detection), z = 2.0, 32.0
- Electronics: DAE3 Sn420; Calibrated: 2020/6/22
- Phantom: SAM Left v5.0; Type: Twin SAM; Serial: TP:1896
- DASY52 52.10.2(1495); SEMCAD X 14.6.12(7450)

**Area Scan (9x9x1):** Measurement grid: dx=12mm, dy=12mm
Maximum value of SAR (measured) = 16.1 W/kg

**Zoom Scan (7x7x7)/Cube 0:** Measurement grid: dx=5mm, dy=5mm, dz=5mm
Reference Value = 104.4 V/m; Power Drift = 0.01 dB
Peak SAR (extrapolated) = 33.7 W/kg
**SAR(1 g) = 13.6 W/kg; SAR(10 g) = 5.88 W/kg**
Maximum value of SAR (measured) = 18.3 W/kg

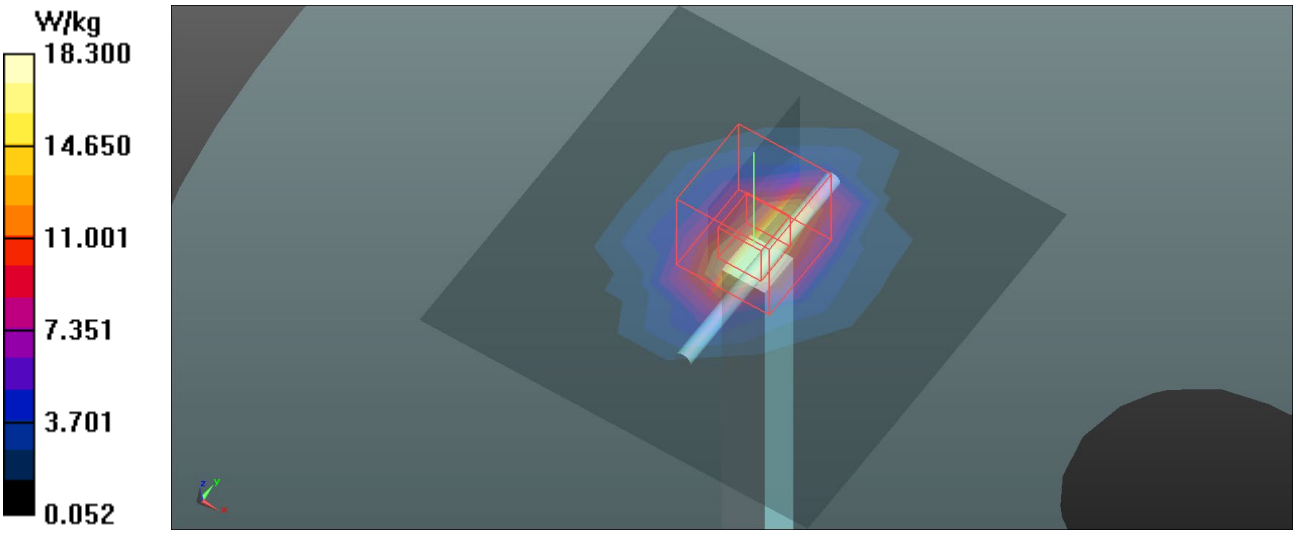

Test Laboratory: BTL.Inc Date: 2020/9/19

**System Check_H2450_0919**

**DUT: Dipole 2450 MHz D2450V2;SN:919;**

Communication System: UID 0, CW (0); Frequency: 2450 MHz; Duty Cycle: 1:1
Medium parameters used: f = 2450 MHz; σ = 1.874 S/m; $\varepsilon_r$ = 38.295; ρ = 1000 kg/m$^3$
Ambient Temperature：23.2 ℃; Liquid Temperature：22.3 ℃

DASY Configuration:

- Probe: ES3DV3 - SN3162; ConvF(4.54, 4.54, 4.54) @ 2450 MHz; Calibrated: 2020/5/9
- Sensor-Surface: 3mm (Mechanical Surface Detection), z = 2.0, 32.0
- Electronics: DAE3 Sn420; Calibrated: 2020/6/22
- Phantom: SAM Left v5.0; Type: Twin SAM; Serial: TP:1896
- DASY52 52.10.2(1495); SEMCAD X 14.6.12(7450)

**Area Scan (9x9x1):** Measurement grid: dx=12mm, dy=12mm
Maximum value of SAR (measured) = 15.2 W/kg

**Zoom Scan (7x7x7)/Cube 0:** Measurement grid: dx=5mm, dy=5mm, dz=5mm
Reference Value = 96.49 V/m; Power Drift = 0.01 dB
Peak SAR (extrapolated) = 25.2 W/kg
**SAR(1 g) = 12.8 W/kg; SAR(10 g) = 6.33 W/kg**
Maximum value of SAR (measured) = 16.3 W/kg

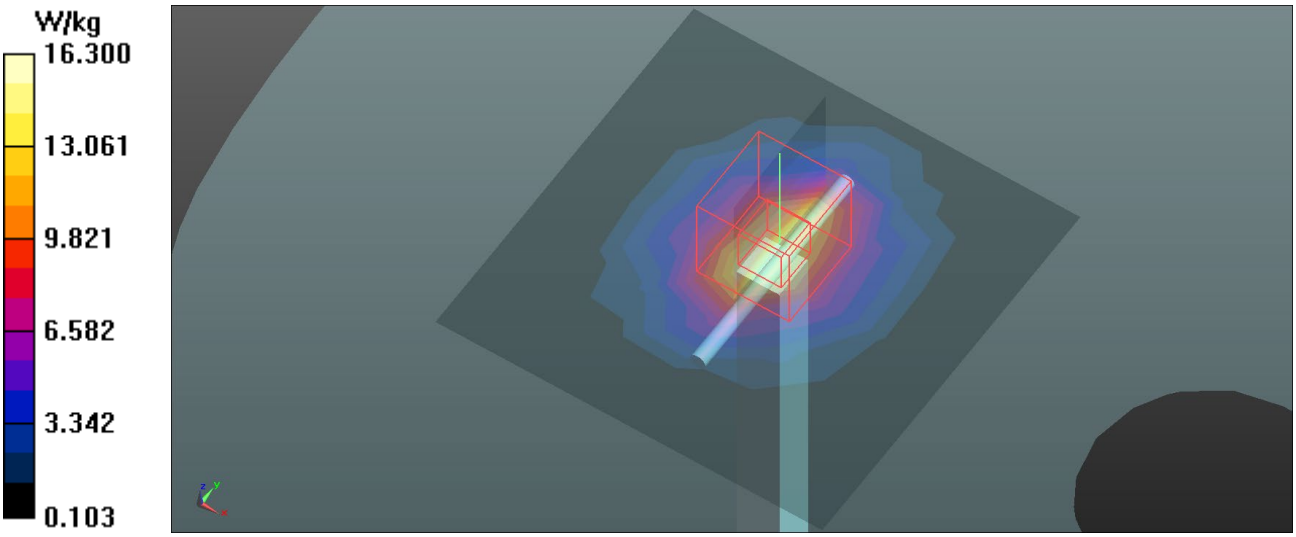

Test Laboratory: BTL.Inc Date: 2020/9/6

**System Check_H2600_0906**

**DUT: Dipole 2600 MHz D2600V2;SN:1067;**

Communication System: UID 0, CW (0); Frequency: 2600 MHz; Duty Cycle: 1:1
Medium parameters used: f = 2600 MHz; σ = 1.916 S/m; $\varepsilon_r$ = 38.014; ρ = 1000 kg/m$^3$
Ambient Temperature: 23.1 ℃; Liquid Temperature: 22.2 ℃

DASY Configuration:

- Probe: ES3DV3 - SN3162; ConvF(4.41, 4.41, 4.41) @ 2600 MHz; Calibrated: 2020/5/9
- Sensor-Surface: 3mm (Mechanical Surface Detection), z = 2.0, 32.0
- Electronics: DAE3 Sn420; Calibrated: 2020/6/22
- Phantom: SAM Right v5.0; Type: QD000P40CC; Serial: TP:1469
- DASY52 52.10.2(1495); SEMCAD X 14.6.12(7450)

**Area Scan (8x9x1):** Measurement grid: dx=12mm, dy=12mm
Maximum value of SAR (measured) = 12.3 W/kg

**Zoom Scan (7x7x7)/Cube 0:** Measurement grid: dx=5mm, dy=5mm, dz=5mm
Reference Value = 98.38 V/m; Power Drift = -0.05 dB
Peak SAR (extrapolated) = 31.3 W/kg
**SAR(1 g) = 13.76 W/kg; SAR(10 g) = 6.03 W/kg**
Maximum value of SAR (measured) = 18.4 W/kg

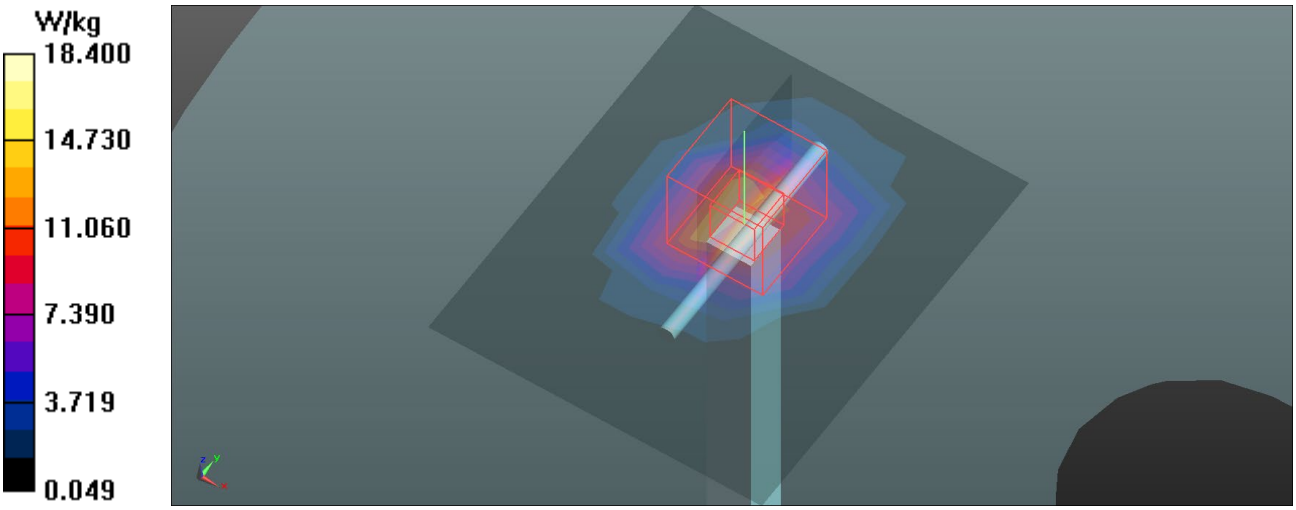

Test Laboratory: BTL.Inc Date: 2020/9/6

**System Check_H2600_0906**

**DUT: Dipole 2600 MHz D2600V2;SN:1067;**

Communication System: UID 0, CW (0); Frequency: 2600 MHz; Duty Cycle: 1:1
Medium parameters used: f = 2600 MHz; $\sigma$ = 1.916 S/m; $\varepsilon_r$ = 38.014; $\rho$ = 1000 kg/m$^3$
Ambient Temperature: 23.1 ℃; Liquid Temperature: 22.2 ℃

DASY Configuration:

- Probe: ES3DV3 - SN3162; ConvF(4.41, 4.41, 4.41) @ 2600 MHz; Calibrated: 2020/5/9
- Sensor-Surface: 3mm (Mechanical Surface Detection), z = 2.0, 32.0
- Electronics: DAE3 Sn420; Calibrated: 2020/6/22
- Phantom: SAM Left v5.0; Type: Twin SAM; Serial: TP:1896
- DASY52 52.10.2(1495); SEMCAD X 14.6.12(7450)

**Area Scan (8x9x1):** Measurement grid: dx=12mm, dy=12mm
Maximum value of SAR (measured) = 12.8 W/kg

**Zoom Scan (7x7x7)/Cube 0:** Measurement grid: dx=5mm, dy=5mm, dz=5mm
Reference Value = 100.5 V/m; Power Drift = -0.01 dB
Peak SAR (extrapolated) = 35.5 W/kg
**SAR(1 g) = 13.7 W/kg; SAR(10 g) = 6.03 W/kg**
Maximum value of SAR (measured) = 18.1 W/kg

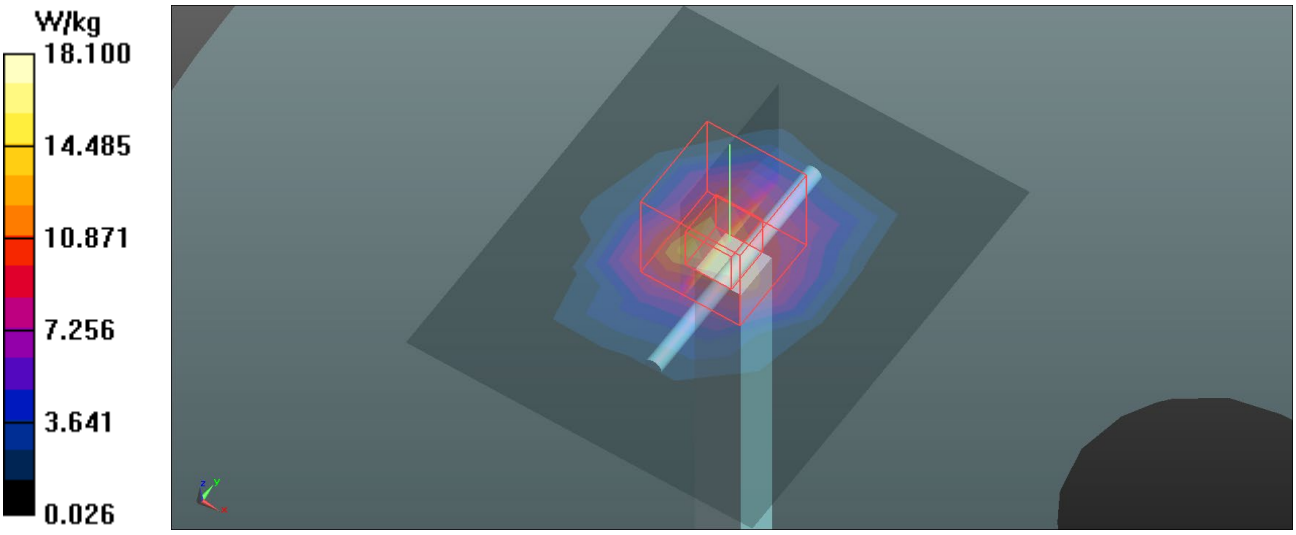

Test Laboratory: BTL.Inc Date: 2020/9/7

**System Check_H2600_0907**

**DUT: Dipole 2600 MHz D2600V2;SN:1067;**

Communication System: UID 0, CW (0); Frequency: 2600 MHz; Duty Cycle: 1:1
Medium parameters used: f = 2600 MHz; σ = 1.904 S/m; $\varepsilon_r$ = 37.98; ρ = 1000 kg/m$^3$
Ambient Temperature: 23.2 ℃; Liquid Temperature: 22.1 ℃

DASY Configuration:

- Probe: ES3DV3 - SN3162; ConvF(4.41, 4.41, 4.41) @ 2600 MHz; Calibrated: 2020/5/9
- Sensor-Surface: 3mm (Mechanical Surface Detection), z = 2.0, 32.0
- Electronics: DAE3 Sn420; Calibrated: 2020/6/22
- Phantom: SAM Right v5.0; Type: QD000P40CC; Serial: TP:1469
- DASY52 52.10.2(1495); SEMCAD X 14.6.12(7450)

**Area Scan (8x9x1):** Measurement grid: dx=12mm, dy=12mm
Maximum value of SAR (measured) = 12.0 W/kg

**Zoom Scan (7x7x7)/Cube 0:** Measurement grid: dx=5mm, dy=5mm, dz=5mm
Reference Value = 111.6 V/m; Power Drift = 0.03 dB
Peak SAR (extrapolated) = 30.5 W/kg
**SAR(1 g) = 13.81 W/kg; SAR(10 g) = 6.09 W/kg**
Maximum value of SAR (measured) = 18.4 W/kg

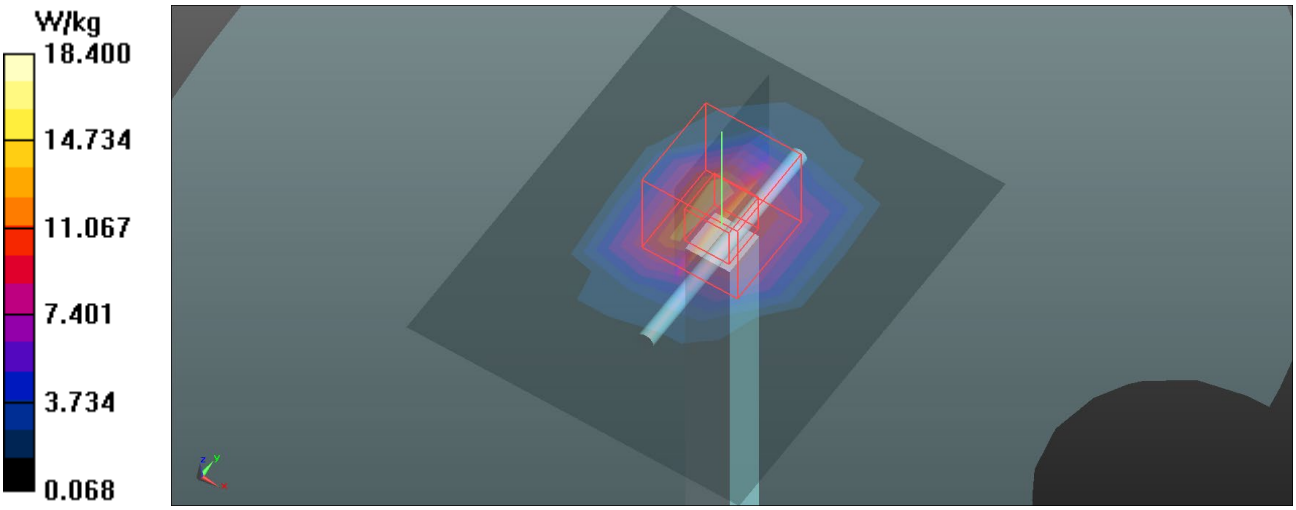

Test Laboratory: BTL.Inc Date: 2020/9/8

**System Check_H2600_0908**

**DUT: Dipole 2600 MHz D2600V2;SN:1067;**

Communication System: UID 0, CW (0); Frequency: 2600 MHz; Duty Cycle: 1:1
Medium parameters used: f = 2600 MHz; σ = 1.908 S/m; $\varepsilon_r$ = 37.962; ρ = 1000 kg/m$^3$
Ambient Temperature: 23.2 ℃; Liquid Temperature: 22.2 ℃

DASY Configuration:

- Probe: EX3DV4 - SN7544; ConvF(7.4, 7.4, 7.4) @ 2600 MHz; Calibrated: 2019/9/9
- Sensor-Surface: 1.4mm (Mechanical Surface Detection), z = 1.0, 31.0
- Electronics: DAE4 Sn1390; Calibrated: 2019/10/29
- Phantom: SAM Left v5.0; Type: Twin SAM; Serial: TP:1896
- DASY52 52.10.2(1495); SEMCAD X 14.6.12(7450)

**Area Scan (8x9x1):** Measurement grid: dx=12mm, dy=12mm
Maximum value of SAR (measured) = 15.1 W/kg

**Zoom Scan (7x7x7)/Cube 0:** Measurement grid: dx=5mm, dy=5mm, dz=5mm
Reference Value = 117.7 V/m; Power Drift = -0.05 dB
Peak SAR (extrapolated) = 30.7 W/kg
**SAR(1 g) = 14.1 W/kg; SAR(10 g) = 6.21 W/kg**
Maximum value of SAR (measured) = 24.5 W/kg

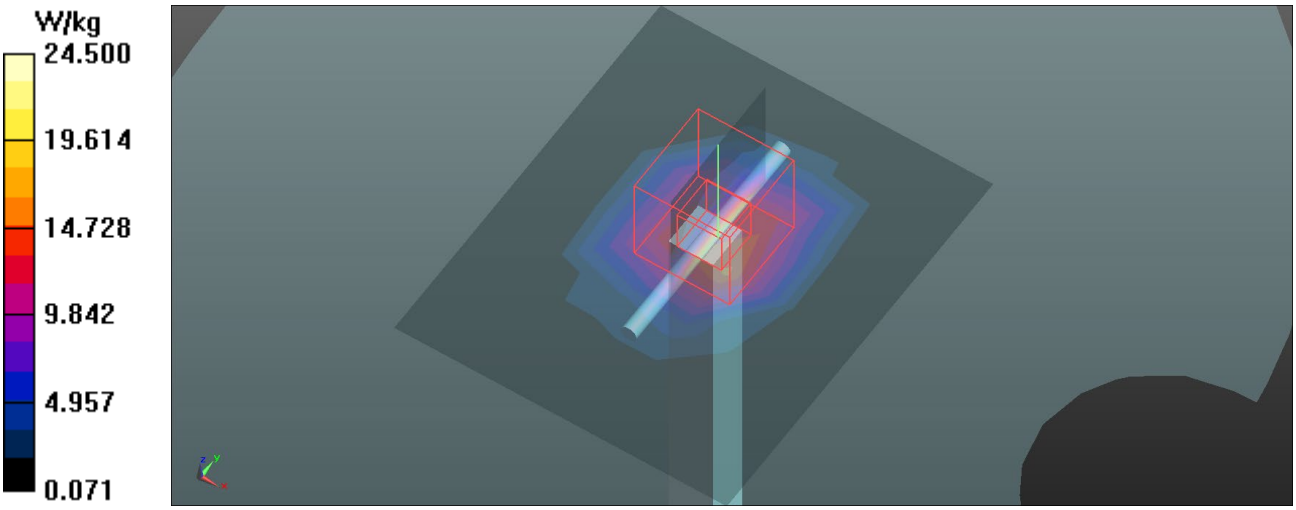

Test Laboratory: BTL.Inc Date: 2020/9/16

**System Check_H5200_0916**

**DUT: Dipole D5GHzV2;SN:1160;**

Communication System: UID 0, CW (0); Frequency: 5200 MHz; Duty Cycle: 1:1
Medium parameters used: f = 5200 MHz; $\sigma$ = 4.518 S/m; $\varepsilon_r$ = 36.372; $\rho$ = 1000 kg/m$^3$
Ambient Temperature: 23.1 ℃; Liquid Temperature: 22.3 ℃

DASY Configuration:

- Probe: EX3DV4 - SN7383; ConvF(5.76, 5.76, 5.76) @ 5200 MHz; Calibrated: 2020/1/3
- Sensor-Surface: 1.4mm (Mechanical Surface Detection), z = 1.0, 23.0
- Electronics: DAE3 Sn420; Calibrated: 2020/6/22
- Phantom: SAM Right v5.0; Type: QD000P40CC; Serial: TP:1469
- DASY52 52.10.2(1495); SEMCAD X 14.6.12(7450)

**Area Scan (6x6x1):** Measurement grid: dx=10mm, dy=10mm
Maximum value of SAR (measured) = 13.4 W/kg

**Zoom Scan (7x7x12)/Cube 0:** Measurement grid: dx=4mm, dy=4mm, dz=2mm
Reference Value = 39.18 V/m; Power Drift = -0.07 dB
Peak SAR (extrapolated) = 26.3 W/kg
**SAR(1 g) = 7.5 W/kg; SAR(10 g) = 2.25 W/kg**
Maximum value of SAR (measured) = 17.5 W/kg

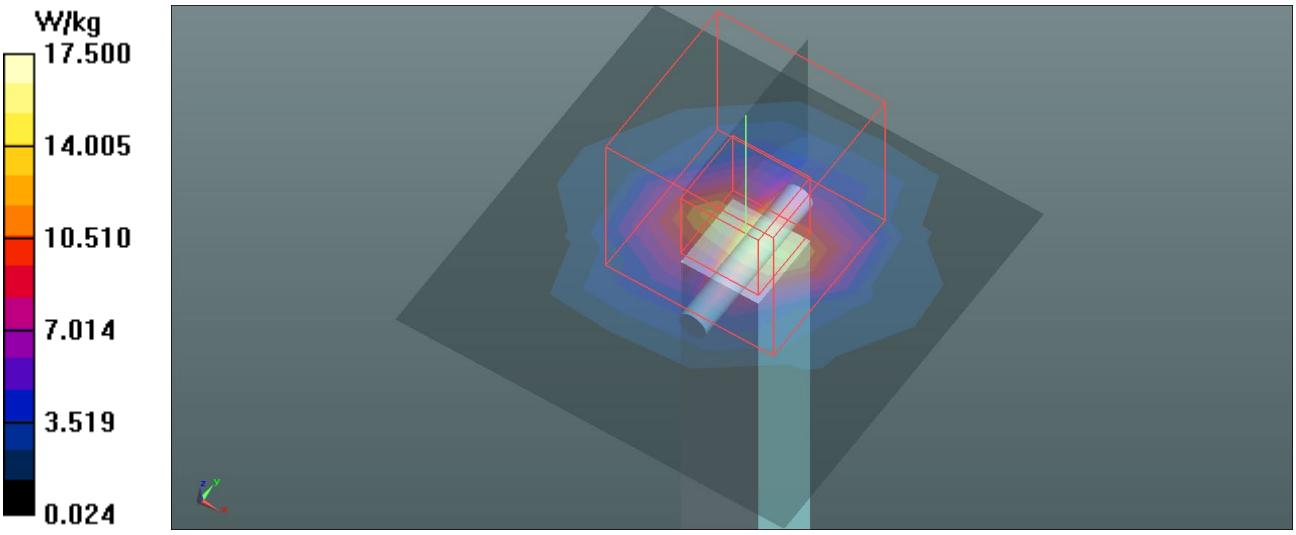

Test Laboratory: BTL.Inc Date: 2020/9/5

**System Check_H5300_0905**

**DUT: Dipole D5GHzV2;SN:1160;**

Communication System: UID 0, CW (0); Frequency: 5300 MHz; Duty Cycle: 1:1
Medium parameters used (interpolated): f = 5300 MHz; $\sigma$ = 4.717 S/m; $\varepsilon_r$ = 36.648; $\rho$ = 1000 kg/m$^3$
Ambient Temperature: 23.2 ℃; Liquid Temperature: 22.5 ℃

DASY Configuration:

- Probe: EX3DV4 - SN7544; ConvF(5.21, 5.21, 5.21) @ 5300 MHz; Calibrated: 2019/9/9
- Sensor-Surface: 1.4mm (Mechanical Surface Detection), z = 1.0, 23.0
- Electronics: DAE4 Sn1390; Calibrated: 2019/10/29
- Phantom: SAM Left; Type: Twin SAM; Serial: 1784
- DASY52 52.10.2(1495); SEMCAD X 14.6.12(7450)

**Area Scan (6x6x1):** Measurement grid: dx=10mm, dy=10mm
Maximum value of SAR (measured) = 4.76 W/kg

**Zoom Scan (7x7x12)/Cube 0:** Measurement grid: dx=4mm, dy=4mm, dz=2mm
Reference Value = 40.72 V/m; Power Drift = -0.01 dB
Peak SAR (extrapolated) = 41.5 W/kg
**SAR(1 g) = 7.84 W/kg; SAR(10 g) = 2.19 W/kg**
Maximum value of SAR (measured) = 7.67 W/kg

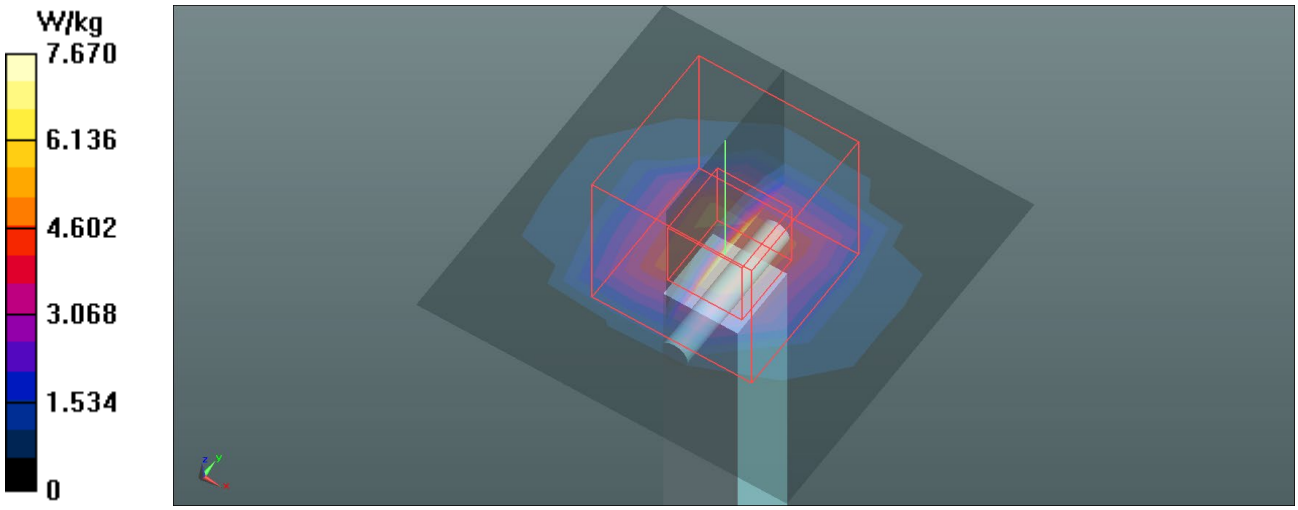

Test Laboratory: BTL.Inc Date: 2020/9/12

**System Check_H5300_0912**

**DUT: Dipole D5GHzV2;SN:1160;**

Communication System: UID 0, CW (0); Frequency: 5300 MHz; Duty Cycle: 1:1
Medium parameters used (interpolated): f = 5300 MHz; $\sigma$ = 4.674 S/m; $\varepsilon_r$ = 36.273; $\rho$ = 1000 kg/m$^3$
Ambient Temperature: 23.2 ℃; Liquid Temperature: 22.4 ℃

DASY Configuration:

- Probe: EX3DV4 - SN7383; ConvF(5.76, 5.76, 5.76) @ 5300 MHz; Calibrated: 2020/1/3
- Sensor-Surface: 1.4mm (Mechanical Surface Detection), z = 1.0, 23.0
- Electronics: DAE3 Sn420; Calibrated: 2020/6/22
- Phantom: SAM Left v5.0; Type: Twin SAM; Serial: TP:1896
- DASY52 52.10.2(1495); SEMCAD X 14.6.12(7450)

**Area Scan (6x6x1):** Measurement grid: dx=10mm, dy=10mm
Maximum value of SAR (measured) = 5.42 W/kg

**Zoom Scan (7x7x12)/Cube 0:** Measurement grid: dx=4mm, dy=4mm, dz=2mm
Reference Value = 39.31 V/m; Power Drift = 0.01 dB
Peak SAR (extrapolated) = 36.2 W/kg
**SAR(1 g) = 7.3 W/kg; SAR(10 g) = 2.1 W/kg**
Maximum value of SAR (measured) = 7.41 W/kg

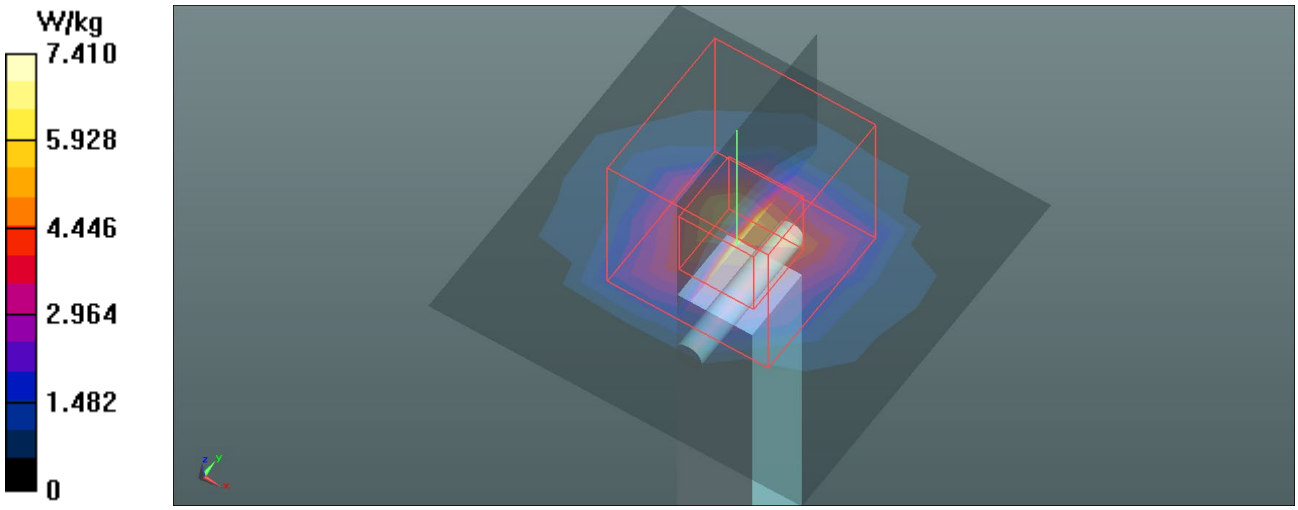

Test Laboratory: BTL.Inc Date: 2020/9/13

**System Check_H5300_0913**

**DUT: Dipole D5GHzV2;SN:1160;**

Communication System: UID 0, CW (0); Frequency: 5300 MHz; Duty Cycle: 1:1
Medium parameters used (interpolated): f = 5300 MHz; σ = 4.674 S/m; εr = 36.277; ρ = 1000 kg/m3
Ambient Temperature：23.1 ℃; Liquid Temperature：22.5 ℃

DASY Configuration:

- Probe: EX3DV4 - SN7383; ConvF(5.76, 5.76, 5.76) @ 5300 MHz; Calibrated: 2020/1/3
- Sensor-Surface: 1.4mm (Mechanical Surface Detection), z = 1.0, 23.0
- Electronics: DAE3 Sn420; Calibrated: 2020/6/22
- Phantom: SAM Left v5.0; Type: Twin SAM; Serial: TP:1896
- DASY52 52.10.2(1495); SEMCAD X 14.6.12(7450)

**Area Scan (6x6x1):** Measurement grid: dx=10mm, dy=10mm
Maximum value of SAR (measured) = 5.40 W/kg

**Zoom Scan (7x7x12)/Cube 0:** Measurement grid: dx=4mm, dy=4mm, dz=2mm
Reference Value = 39.22 V/m; Power Drift = 0.00 dB
Peak SAR (extrapolated) = 35.3 W/kg
**SAR(1 g) = 7.32 W/kg; SAR(10 g) = 2.13 W/kg**
Maximum value of SAR (measured) = 7.37 W/kg

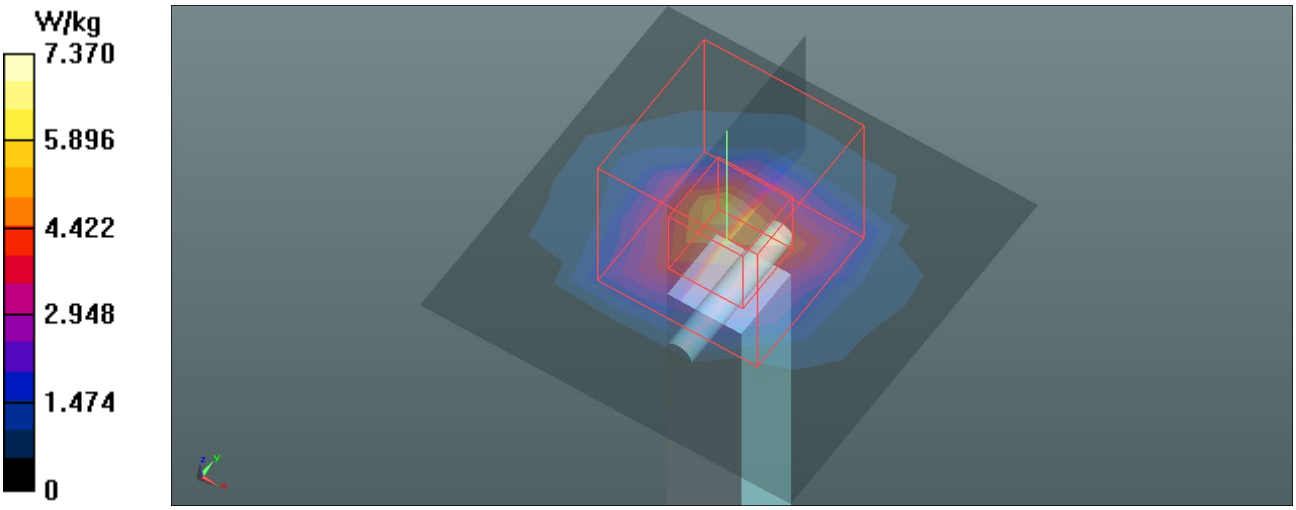

Test Laboratory: BTL.Inc Date: 2020/9/16

**System Check_H5300_0916**

**DUT: Dipole D5GHzV2;SN:1160;**

Communication System: UID 0, CW (0); Frequency: 5300 MHz; Duty Cycle: 1:1
Medium parameters used (interpolated): f = 5300 MHz; σ = 4.673 S/m; $\varepsilon_r$ = 36.282; ρ = 1000 kg/m$^3$
Ambient Temperature: 23.1 ℃; Liquid Temperature: 22.3 ℃

DASY Configuration:

- Probe: EX3DV4 - SN7383; ConvF(5.76, 5.76, 5.76) @ 5300 MHz; Calibrated: 2020/1/3
- Sensor-Surface: 1.4mm (Mechanical Surface Detection), z = 1.0, 23.0
- Electronics: DAE3 Sn420; Calibrated: 2020/6/22
- Phantom: SAM Right v5.0; Type: QD000P40CC; Serial: TP:1469
- DASY52 52.10.2(1495); SEMCAD X 14.6.12(7450)

**Area Scan (6x6x1):** Measurement grid: dx=10mm, dy=10mm
Maximum value of SAR (measured) = 4.68 W/kg

**Zoom Scan (7x7x12)/Cube 0:** Measurement grid: dx=4mm, dy=4mm, dz=2mm
Reference Value = 40.53 V/m; Power Drift = 0.05 dB
Peak SAR (extrapolated) = 38.7 W/kg
**SAR(1 g) = 7.62 W/kg; SAR(10 g) = 2.15 W/kg**
Maximum value of SAR (measured) = 7.48 W/kg

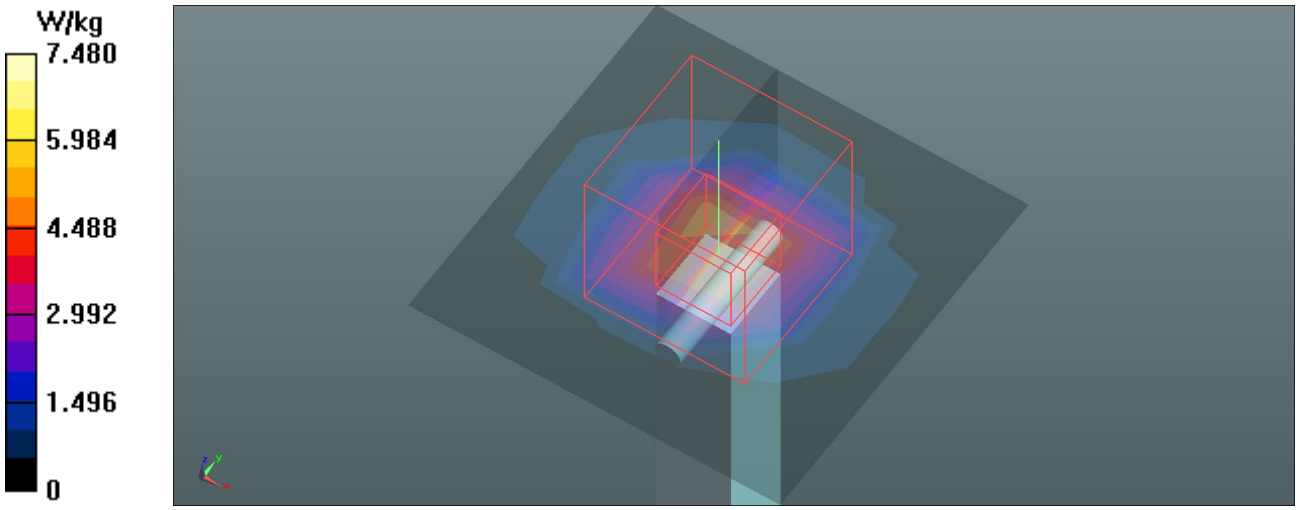

Test Laboratory: BTL.Inc Date: 2020/9/5

**System Check_H5500_0905**

**DUT: Dipole D5GHzV2;SN:1160;**

Communication System: UID 0, CW (0); Frequency: 5500 MHz; Duty Cycle: 1:1
Medium parameters used: f = 5500 MHz; σ = 4.873 S/m; $\varepsilon_r$ = 36.095; ρ = 1000 kg/m$^3$
Ambient Temperature: 23.2 ℃; Liquid Temperature: 22.5 ℃

DASY Configuration:

- Probe: EX3DV4 - SN7544; ConvF(4.95, 4.95, 4.95) @ 5500 MHz; Calibrated: 2019/9/9
- Sensor-Surface: 1.4mm (Mechanical Surface Detection), z = 1.0, 23.0
- Electronics: DAE4 Sn1390; Calibrated: 2019/10/29
- Phantom: SAM Left; Type: Twin SAM; Serial: 1784
- DASY52 52.10.2(1495); SEMCAD X 14.6.12(7450)

**Area Scan (6x6x1):** Measurement grid: dx=10mm, dy=10mm
Maximum value of SAR (measured) = 4.74 W/kg

**Zoom Scan (7x7x12)/Cube 0:** Measurement grid: dx=4mm, dy=4mm, dz=2mm
Reference Value = 39.76 V/m; Power Drift = 0.02 dB
Peak SAR (extrapolated) = 44.2 W/kg
**SAR(1 g) = 8.02 W/kg; SAR(10 g) = 2.24 W/kg**
Maximum value of SAR (measured) = 7.56 W/kg

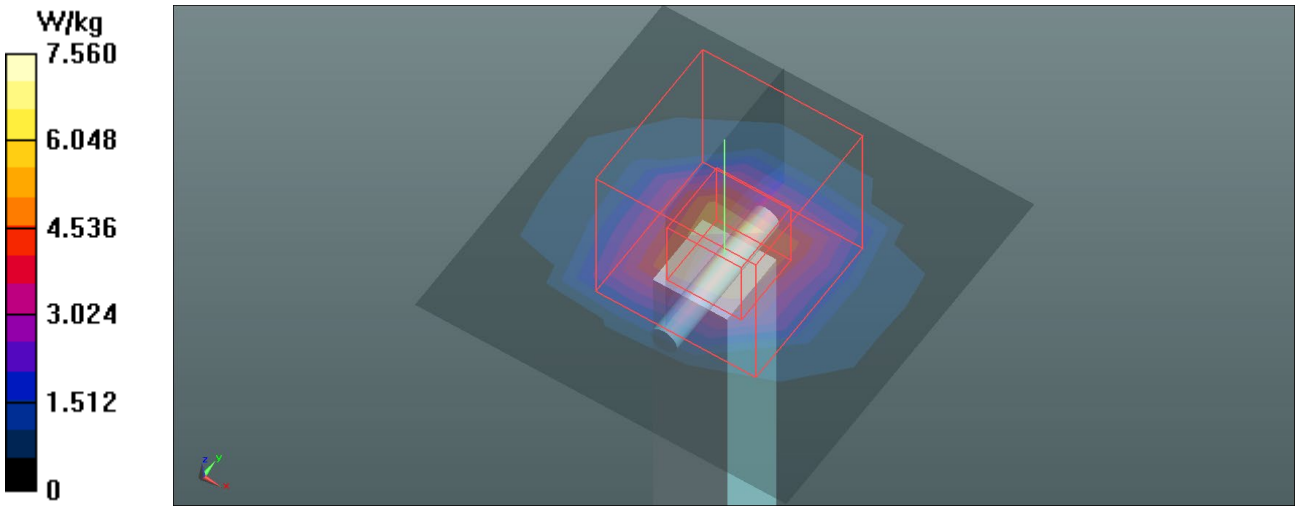

Test Laboratory: BTL.Inc Date: 2020/9/12

**System Check_H5500_0912**

**DUT: Dipole D5GHzV2;SN:1160;**

Communication System: UID 0, CW (0); Frequency: 5500 MHz; Duty Cycle: 1:1
Medium parameters used: f = 5500 MHz; σ = 4.826 S/m; εr = 35.74; ρ = 1000 kg/m3
Ambient Temperature: 23.2 ℃; Liquid Temperature: 22.4 ℃

DASY Configuration:

- Probe: EX3DV4 - SN7383; ConvF(5.09, 5.09, 5.09) @ 5500 MHz; Calibrated: 2020/1/3
- Sensor-Surface: 1.4mm (Mechanical Surface Detection), z = 1.0, 23.0
- Electronics: DAE3 Sn420; Calibrated: 2020/6/22
- Phantom: SAM Left v5.0; Type: Twin SAM; Serial: TP:1896
- DASY52 52.10.2(1495); SEMCAD X 14.6.12(7450)

**Area Scan (6x6x1):** Measurement grid: dx=10mm, dy=10mm
Maximum value of SAR (measured) = 5.69 W/kg

**Zoom Scan (7x7x12)/Cube 0:** Measurement grid: dx=4mm, dy=4mm, dz=2mm
Reference Value = 39.44 V/m; Power Drift = 0.06 dB
Peak SAR (extrapolated) = 41.3 W/kg
**SAR(1 g) = 7.93 W/kg; SAR(10 g) = 2.22 W/kg**
Maximum value of SAR (measured) = 7.74 W/kg

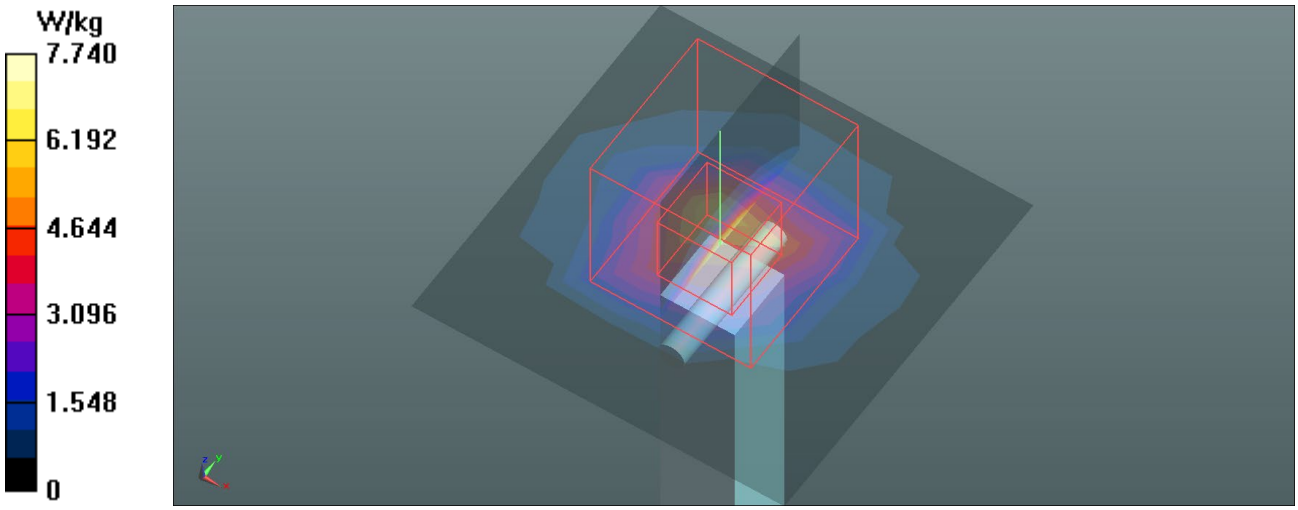

Test Laboratory: BTL.Inc Date: 2020/9/13

**System Check_H5500_0913**

**DUT: Dipole D5GHzV2;SN:1160;**

Communication System: UID 0, CW (0); Frequency: 5500 MHz; Duty Cycle: 1:1
Medium parameters used: f = 5500 MHz; σ = 4.827 S/m; εr = 35.745; ρ = 1000 kg/m3
Ambient Temperature: 23.1 ℃; Liquid Temperature: 22.5 ℃

DASY Configuration:

- Probe: EX3DV4 - SN7383; ConvF(5.09, 5.09, 5.09) @ 5500 MHz; Calibrated: 2020/1/3
- Sensor-Surface: 1.4mm (Mechanical Surface Detection), z = 1.0, 23.0
- Electronics: DAE3 Sn420; Calibrated: 2020/6/22
- Phantom: SAM Left v5.0; Type: Twin SAM; Serial: TP:1896
- DASY52 52.10.2(1495); SEMCAD X 14.6.12(7450)

**Area Scan (6x6x1):** Measurement grid: dx=10mm, dy=10mm
Maximum value of SAR (measured) = 4.80 W/kg

**Zoom Scan (7x7x12)/Cube 0:** Measurement grid: dx=4mm, dy=4mm, dz=2mm
Reference Value = 40.42 V/m; Power Drift = 0.03 dB
Peak SAR (extrapolated) = 44.3 W/kg
**SAR(1 g) = 8.07 W/kg; SAR(10 g) = 2.26 W/kg**
Maximum value of SAR (measured) = 7.70 W/kg

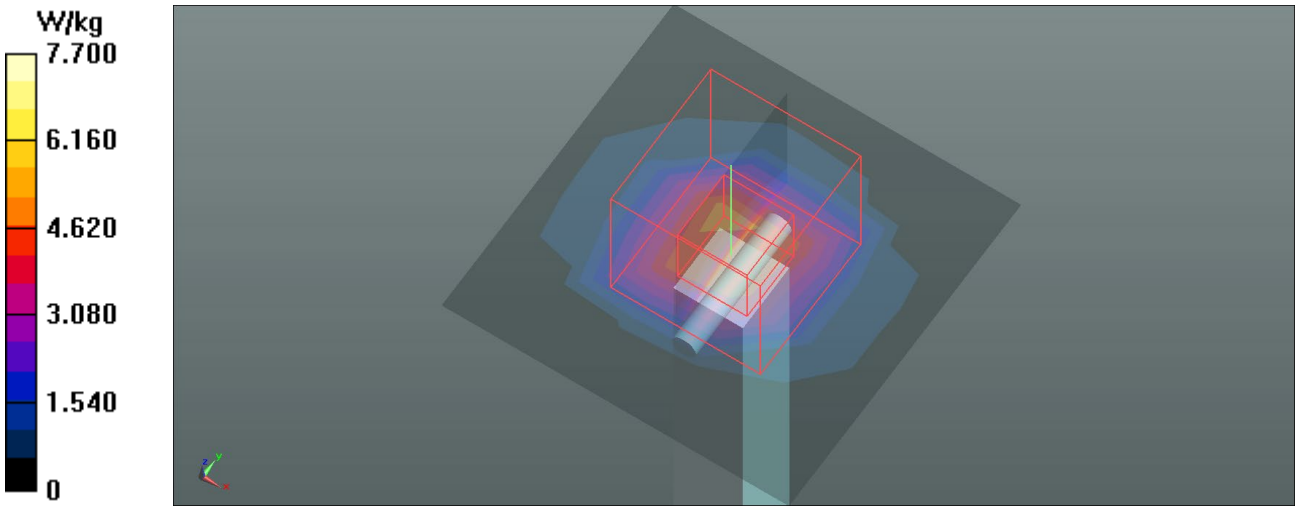

Test Laboratory: BTL.Inc Date: 2020/9/16

**System Check_H5500_0916**

**DUT: Dipole D5GHzV2;SN:1160;**

Communication System: UID 0, CW (0); Frequency: 5500 MHz; Duty Cycle: 1:1
Medium parameters used: f = 5500 MHz; σ = 4.826 S/m; $\varepsilon_r$ = 35.75; ρ = 1000 kg/m$^3$
Ambient Temperature: 23.1 ℃; Liquid Temperature: 22.3 ℃

DASY Configuration:

- Probe: EX3DV4 - SN7383; ConvF(5.09, 5.09, 5.09) @ 5500 MHz; Calibrated: 2020/1/3
- Sensor-Surface: 1.4mm (Mechanical Surface Detection), z = 1.0, 23.0
- Electronics: DAE3 Sn420; Calibrated: 2020/6/22
- Phantom: SAM Right v5.0; Type: QD000P40CC; Serial: TP:1469
- DASY52 52.10.2(1495); SEMCAD X 14.6.12(7450

**Area Scan (6x6x1):** Measurement grid: dx=10mm, dy=10mm
Maximum value of SAR (measured) = 4.83 W/kg

**Zoom Scan (7x7x12)/Cube 0:** Measurement grid: dx=4mm, dy=4mm, dz=2mm
Reference Value = 40.41 V/m; Power Drift = 0.03 dB
Peak SAR (extrapolated) = 42.8 W/kg
**SAR(1 g) = 8.04 W/kg; SAR(10 g) = 2.26 W/kg**
Maximum value of SAR (measured) = 7.69 W/kg

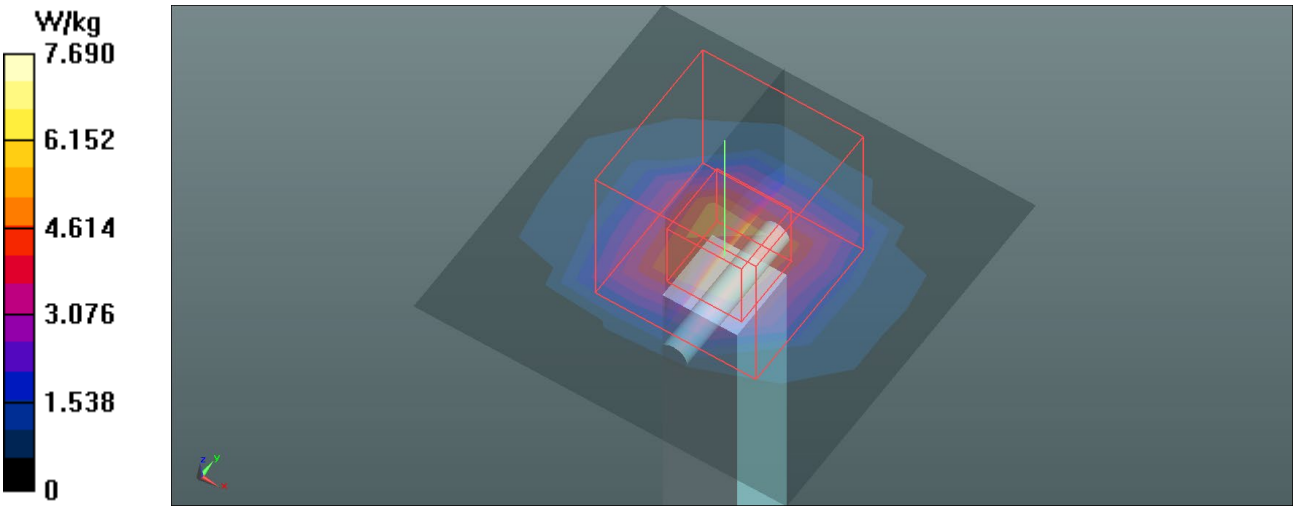

Test Laboratory: BTL.Inc Date: 2020/9/5

**System Check_H5800_0905**

**DUT: Dipole D5GHzV2;SN:1160;**

Communication System: UID 0, CW (0); Frequency: 5800 MHz; Duty Cycle: 1:1
Medium parameters used: f = 5800 MHz; σ = 5.175 S/m; $\varepsilon_r$ = 35.783; ρ = 1000 kg/m$^3$
Ambient Temperature: 23.2 ℃; Liquid Temperature: 22.5 ℃

DASY Configuration:

- Probe: EX3DV4 - SN7544; ConvF(4.75, 4.75, 4.75) @ 5800 MHz; Calibrated: 2019/9/9
- Sensor-Surface: 1.4mm (Mechanical Surface Detection), z = 1.0, 23.0
- Electronics: DAE4 Sn1390; Calibrated: 2019/10/29
- Phantom: SAM Left; Type: Twin SAM; Serial: 1784
- DASY52 52.10.2(1495); SEMCAD X 14.6.12(7450)

**Area Scan (6x6x1):** Measurement grid: dx=10mm, dy=10mm
Maximum value of SAR (measured) = 5.03 W/kg

**Zoom Scan (7x7x12)/Cube 0:** Measurement grid: dx=4mm, dy=4mm, dz=2mm
Reference Value = 36.19 V/m; Power Drift = 0.01 dB
Peak SAR (extrapolated) = 43.3 W/kg
**SAR(1 g) = 7.62 W/kg; SAR(10 g) = 2.13 W/kg**
Maximum value of SAR (measured) = 6.90 W/kg

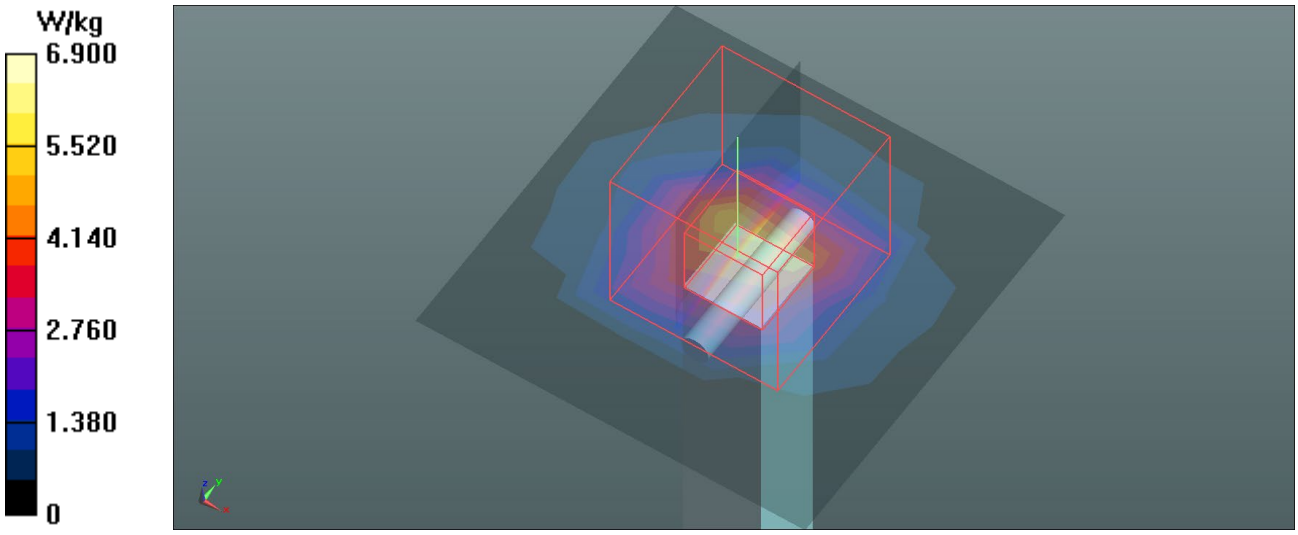

Test Laboratory: BTL.Inc Date: 2020/9/12

**System Check_H5800_0912**

**DUT: Dipole D5GHzV2;SN:1160;**

Communication System: UID 0, CW (0); Frequency: 5800 MHz; Duty Cycle: 1:1
Medium parameters used: f = 5800 MHz; σ = 5.123 S/m; εr = 35.423; ρ = 1000 kg/m3
Ambient Temperature: 23.2 ℃; Liquid Temperature: 22.4 ℃

DASY Configuration:

- Probe: EX3DV4 - SN7383; ConvF(5.19, 5.19, 5.19) @ 5800 MHz; Calibrated: 2020/1/3
- Sensor-Surface: 1.4mm (Mechanical Surface Detection), z = 1.0, 23.0
- Electronics: DAE3 Sn420; Calibrated: 2020/6/22
- Phantom: SAM Left v5.0; Type: Twin SAM; Serial: TP:1896
- DASY52 52.10.2(1495); SEMCAD X 14.6.12(7450)

**Area Scan (6x6x1):** Measurement grid: dx=10mm, dy=10mm
Maximum value of SAR (measured) = 4.83 W/kg

**Zoom Scan (7x7x12)/Cube 0:** Measurement grid: dx=4mm, dy=4mm, dz=2mm
Reference Value = 35.26 V/m; Power Drift = 0.01 dB
Peak SAR (extrapolated) = 42.5 W/kg
**SAR(1 g) = 7.41 W/kg; SAR(10 g) = 2.16 W/kg**
Maximum value of SAR (measured) = 6.57 W/kg

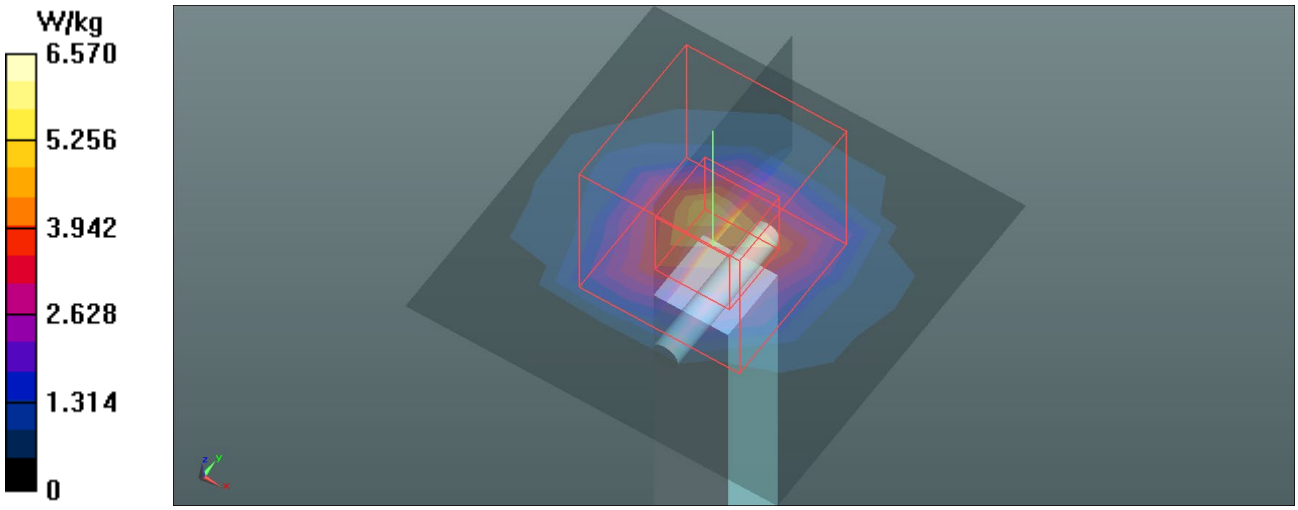

Test Laboratory: BTL.Inc Date: 2020/9/13

**System Check_H5800_0913**

**DUT: Dipole D5GHzV2;SN:1160;**

Communication System: UID 0, CW (0); Frequency: 5800 MHz; Duty Cycle: 1:1
Medium parameters used: f = 5800 MHz; σ = 5.124 S/m; εr = 35.43; ρ = 1000 kg/m3
Ambient Temperature: 23.1 ℃; Liquid Temperature: 22.5 ℃

DASY Configuration:

- Probe: EX3DV4 - SN7383; ConvF(5.19, 5.19, 5.19) @ 5800 MHz; Calibrated: 2020/1/3
- Sensor-Surface: 1.4mm (Mechanical Surface Detection), z = 1.0, 23.0
- Electronics: DAE3 Sn420; Calibrated: 2020/6/22
- Phantom: SAM Left v5.0; Type: Twin SAM; Serial: TP:1896
- DASY52 52.10.2(1495); SEMCAD X 14.6.12(7450)

**Area Scan (6x6x1):** Measurement grid: dx=10mm, dy=10mm
Maximum value of SAR (measured) = 4.98 W/kg
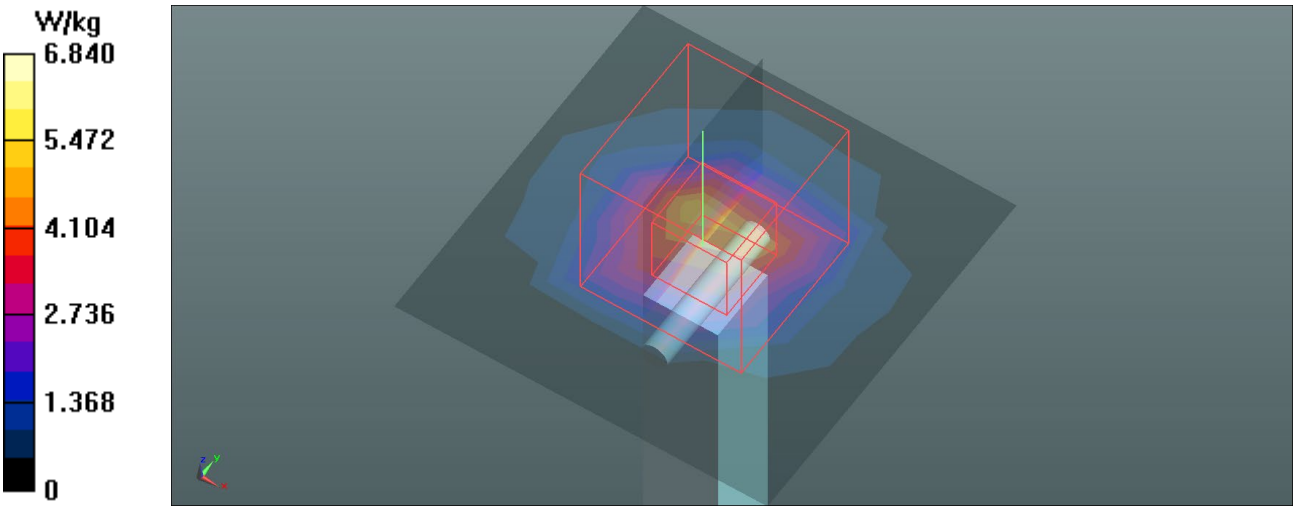
**Zoom Scan (7x7x12)/Cube 0:** Measurement grid: dx=4mm, dy=4mm, dz=2mm
Reference Value = 36.22 V/m; Power Drift = 0.01 dB
Peak SAR (extrapolated) = 42.9 W/kg
**SAR(1 g) = 7.56 W/kg; SAR(10 g) = 2.12 W/kg**
Maximum value of SAR (measured) = 6.84 W/kg