6.2 Service menu group

Figure 17: Service menu group

6.2.1 Language

- **Set language**
  - **Range:** English | Norwegian | French | Spanish | Portuguese | Russian
  - **Default:** English
  - **Details:** Set the language to use on the front panel user interface. Path from home screen is: Press the knob and press rightmost key once (Menu). Rotate the knob two times to the right (Service menu) and press it. Rotate the knob one time to the right (Set language) and press it. Press the button once more and choose "YES" by pressing the right button, this will set the language to English (default).

6.2.2 Access menu

- **Menu PIN code**
  - **Range:** 0 - 9999
  - **Default:** 1881
  - **Details:** Enter a PIN code with at least four numbers to unlock the Access control.
- **Access control**
  - **Range:** SysOp | Technician | Operator | Restricted
  - **Default:** SysOp
  - **Details:** Set user level to wanted level, SysOp, Technician, Operator or Restricted as defined in the beginning of this chapter.

6.2.3 Squelch

- **Sq setup**
  - **Range:** RSSI | S/N | RSSI OR S/N | RSSI AND S/N
  - **Default:** RSSI OR S/N
  - **Details:** The radio has a RSSI and an S/N squelch functions. This setting selects the squelch type or combination of squelch function for the radio.
    RSSI selects RSSI level squelch only. It will de-mute audio when any RF signal passes the level set by the RSSI SQ level setting.
    S/N selects Signal to noise squelch function only and de-mute the audio when the signal to nose level passes the S/N ratio set by the S/N SQ level setting.
    RSSI OR S/N will give audio if either the RSSI or the S/N squelch triggers.
    RSSI AND S/N setting needs to fulfil both RSSI and S/N squelch criteria to de-mute the audio. It is recommended to use the default setting (RSSI OR S/N) and set the RSSI squelch to a relatively high level (e.g. 20 dBµV) to avoid false triggering of the squelch caused by adjacent transmitters.
- **RSSI SQ level**
  - **Range:** -5 to +42 dBµV
  - **Default:** 20 dBµV

- **Details:** The absolute RSSI level when the squelch will open. This squelch is independent of the background noise and will trigger regardless of the signal quality even if it is interference generated from keyclicks or noise from adjacent transmitters. If the RSSI SQ level is set to low, this will be the dominant squelch and the advantages of using the S/N squelch will be totally lost.

- **S/N SQ level**
  - **Range:** 5 to 20 dB
  - **Default:** 12 dB
  - **Details:** Sets the Signal to noise level that the S/N squelch shall open on. Note the level is referenced to a 30% modulated audio signal and is independent of the actual modulation of the incoming signal. Thus, if the S/N SQ level is set to 12 dB, the squelch will open when the carrier to noise is 12 dB (S/N) + 16 dB (30% sideband to carrier), or 28 dB. Normally this will be an RF signal that is less than 1µV when there is no background noise.

6.2.4 Keying

- **Source**
  - **Range:** Mic, Txgnd
  - **Default:** Mic, Txgnd
  - **Details:** Determines what signal that can be used to key the transmitter.
    Mic: Local PTT input from a microphone, where the PTT is connected to pin 4 and 8 (gnd) on the Mic/headset connector. When audio input is set to Auto, the transmitter will use the microphone as the audio input source.
    Txgnd: The transmitter is keyed by grounding the TXKEY (I/O#4 or I/O#7 depending on IO Config) input pin on the I/O connector. When audio input is set to Auto, the transmitter will use the line input as the audio input source.

- **TX timeout**
  - **Range:** Off (0) | 5 - 900 sec
  - **Default:** Off (0)
  - **Details:** The timeout value for the transmitter in seconds. Writing a 0 to this object will switch off the time out circuit. All other values are the time out in seconds. The setting operates on the analogue key input and on each individual ED-137 connection on the VoIP interface. As a safety feature, when two (or more) users are connected, using VoIP, then if one user times out due to 'stuck microphone', the other user{s} will still be able to take over and use the radio for communication as normal.

- **RF delay**
  - **Range:** 0 - 200 ms
  - **Default:** 0 ms (Off)
  - **Details:** This setting delays the RF output after keying signal is applied, or after the GPO (#1) on the AUX connector signals that the transmitter is keyed when set to Mode2. The purpose is to use the GPO as a key signal to the external equipment, then delay the generation of RF until the external equipment has settled its key relay. This is to avoid hot switching and possibly damage

of the external equipment. Used in conjunction with external power amplifiers (PAV, PAU), pre-amplifiers, antenna changeover units (ACU3), etc. Since the RF switching in the transmitter is done electronically, the RF is produced in less than 10 ms (Keying delay) after the PTT signal is detected. In order to delay the RF carrier, this parameter should be set. A reasonable setting should be in the order of 40 - 50 ms.

- **Key Priority (option: VoIP)**
  - **Range:** off, normal, coupling, priority, emergency, test
  - **Default:** Normal
  - **Details:** Defines the key priorities for the analogue key inputs. This is useful when the radio is connected to both an analogue interface and a VoIP interface at the same time. Defining a higher priority for the analogue input means that the analogue key and line input will have priority over the VoIP input. Defining a lower value means that the VoIP input will have priority. The values correspond to the values defined in ED-137B, C volume 1 for a SIP connection.

    Off: Priority is turned off and the radio will use the voice input that was keyed first, regardless of the priority of the VoIP input.
    Test: A VoIP input with the lowest priority. Used to test transmission during inactivity periods.
    Coupling: The analogue interface has the lowest priority. A VoIP input signal with priority set to normal, priority or emergency will be prioritized.
    Normal: A VoIP input with priority set to emergency or priority will be prioritized.
    Priority: A VoIP input with priority set to emergency will be prioritized.
    Emergency: Highest priority.

    If the priority of the VoIP signal and the analogue signal has the same priority, they will be treated at a “first come-first served” basis.

6.2.5 IO config

- **I/O#4**
  - **Range:** Txlow | Rxbusy | TxKey | AlarmOut
  - **Default:** TxKey
  - **Details:** IOConfig, I/O 4, is used to configure the behavior of the GPIO pin on the I/O connector (pin 4). The settings are:
    Txlow (Mode 1): Close this pin to GND will force TX into low power mode (Gas alarm input).
    Rxbusy (Mode 2): Pin is closed to GND to indicate squelch open (busy).
    TxKey (Mode 3): Close this pin to GND to key the transmitter (PTT).
    AlarmOut (Mode 4): Pin is open when there is an alarm, closed when radio is operating normally.
- **I/O#7**
  - **Range:** Txlow | Rxbusy | TxKey | AlarmOut
  - **Default:** Rxbusy
  - **Details:** IOConfig, I/O#7, is used to configure the behavior of the GPIO pin on the I/O connector (pin 7). The settings are:

Txlow (Mode 1):	Close this pin to GND will force TX into low power mode (Gas alarm input).
Rxbusy (Mode 2):	Pin is closed to GND to indicate squelch open (busy).
TxKey (Mode 3):	Close this pin to GND to key the transmitter (PTT).
AlarmOut (Mode 4):	Pin is open when there is an alarm, closed when radio is operating normally.

6.2.6 LAN

- **Address**
  - **Range:** 4 octets IP address
  - **Default:** —
  - **Details:** IPv4 interface address for LAN interface. Must be unique on the LAN and should correspond to the LAN setup for the network that the radio is connected to.
- **Netmask**
  - **Range:** 4 octets IP netmask
  - **Default:** 255.255.0.0
  - **Details:** The netmask (sub-net mask) used on IP interface. Should correspond to the LAN setup for the network that the radio is connected to.
- **Default gateway**
  - **Range:** 4 octets IP address
  - **Default:** 0.0.0.0
  - **Details:** If set different from the default, the radio unit will send IP traffic to the default gateway if the address is unreachable on the local network. See the network section for details about routing.
- **SNMP port**
  - **Range:** 1 – 65535
  - **Default:** 161
  - **Details:** The input port used for SNMP commands to the radio, sent from external sources like CMS systems. The default port is the global port for all SNMP commands. Both networks may be used for SNMP traffic.
- **SNMP trap IP**
  - **Range:** 4 octets IP address
  - **Default:** 239.0.0.1
  - **Details:** The IP address witch SNMP traps are sent to. The address can be in the form of a unicast, multicast or broadcast address. Additional trap destination IPs with individual configuration can be defined in the MDT or RCMS software. Without any additional configuration, the traps will be sent from LAN interface to trap port 162. This menu configures the first row in the trap table in the RCMS/MDT software.
- **TCP control port**
  - **Range:** 1 – 65535

  - **Default:** 3008
  - **Details:** The port used by TCP clients for remote control of the radio using TCP.

- **DHCP**
  - **Range:** On | Off
  - **Default:** Off
  - **Details:** Enable IP4 DHCP reception on LAN interface. The radio unit need to be rebooted if this parameter is changed, after a reboot the IP address will be renewed with the IP address obtained by DHCP.

- **RTP in IP (option: VoIP)**
  - **Range:** 4 octets IP address
  - **Default:** 0.0.0.0
  - **Details:** If set to 0.0.0.0 the radio accepts RTP from all IP addresses (N/A in ED-137). Can be used to set specific IP address to receive RTP from when using static VoIP settings.

- **RTP in port (option: VoIP)**
  - **Range:** 1 – 65535
  - **Default:** 3003
  - **Details:** The IP port used for RTP voice when the radio is used for static VoIP.

- **RTP out IP (option: VoIP)**
  - **Range:** 4 octets IP address
  - **Default:** 0.0.0.0
  - **Details:** RTP output IP address when the radio is used for static VoIP.

- **RTP out port (option: VoIP)**
  - **Range:** 1 – 65535
  - **Default:** 3004
  - **Details:** RTP output IP port when the radio is used for static VoIP.

- **RTP Framesize (option: VoIP)**
  - **Range:** 10 to 100 ms
  - **Default:** 20 ms
  - **Details:** RTP output payload size (frame size) when the radio is used for static VoIP.

- **RTP codec (option: VoIP) (option: Codec)**
  - **Range:** G711uLaw, G711Alaw, PCM, G729, Comp4x
  - **Default:** G711Alaw

- **Details:** The codec (protocol) used to encode/decode VoIP samples when the radio is using static RTP.
  G711uLaw 64 kbit/s
  G711ALaw 64 kbit/s
  PCM 64 kbit/s, 8 bit
  G729 (option) 8 kbit/s

- **RTP sync src (option: VoIP)**
  - **Range:** 0 to 65535
  - **Default:** 0
  - **Details:** The synchronization source ID embedded in the RTP (voice package) header used for distinguishing packages to the same port.
- **VoIP protocol (option: VoIP)**
  - **Range:** ED137 | Standard RTP | Standard RTP ext
  - **Default:** ED137
  - **Details:** The protocol format used to receive/transmit VoIP packages.
    ED137: Use SIP/RTP as defined in ED-137B or ED-137C to connect to the radio. The radio will automatically negotiate and use parameters for ports, codec, ED-137 version etc.
    Standard RTP: The radio uses plain RTP for audio. External keying signals to the analogue keying ports must be provided in addition to key the radio.
    Standard RTP ext: The radio uses RTP but not SIP from the ED-137 specification. I.e. a key signal to the radio can be sent in the header extension as defined by the ED-137 standard.
- **VoIP JitterBuf (option: VoIP)**
  - **Range:** Adaptive (0) | 1 – 1000 ms
  - **Default:** Adaptive (0)
  - **Details:** Use the Adaptive setting for most networks. The radio will automatically tune the jitter buffer for optimal operation with the jitter present using an initial value of 10 ms. Set to a fixed value if required, this is recommended for networks with large jitter variation (satellite networks). Note, that the effective jitter buffer will not be more than 4xRTP frame size, thus when the jitter buffer is increased above 80 ms the frame size should also be increased (up to 150 ms).

6.2.7 IPv6

- **Static IPv6**
  - **Range:** 16 octets IP6 address
  - **Default:** —
  - **Details:** Display unit Static IPv6 address for LAN interface. Setting of the IPv6 address is done using MDT/RCMS.
- **Link Local IP6**
  - **Range:** 16 octets IP6 address

- **Default:** —
- **Details:** Display unit IPv6 Link Local address for LAN interface. This IP address is derived from the MAC address.

6.2.8 Location

- **Number**
  - **Range:** 0 – 100
  - **Default:** 0
  - **Details:** Used to identify the location of the radio from a remote application. Defines the rack where the radio is located.
- **Row**
  - **Range:** 0 - 20
  - **Default:** 0
  - **Details:** Used to identify the location of the radio from a remote application. Defines the row number in the rack. The row number is counted from the top to the bottom of the rack.
- **Column**
  - **Range:** 0 - 6
  - **Default:** 0
  - **Details:** Used to identify the location of the radio from a remote application. Defines the column in the rack. The column number is counted from the left in steps of one receiver width or 14TE. There are 84 TE in a 19” rack. I.e. in a 19” frame width 6 receivers, the receivers will have the column set to 1,2,3,4,5 or 6.
    In a 19” frame width 3 transmitters, the transmitters will have the column set to 1,3 or 5.

6.2.9 Secure Mode

- **Secure Mode**
  - **Range:** On | Off | On w/TCP | On w/Auth
  - **Default:** Off
  - **Details:** By default, the radio allows remote control using SNMPv1, SNMPv2, SNMPv3, TCP and HTTP. In addition, both standard SIP and RTP used for ED-137 communication is enabled. Various security modes can be selected from the front panel or a remote command to restrict some protocols.
    Note: The communication to the unit may be broken if a security mode is set, therefore the SNMPv3 table (intusrSnmpUserTable) must be initiated first using the MDT or the RCMS application.

    On: Enabled protocols: SIP, RTP, SNMPv3.
    Off: Enabled protocols: SIP, RTP, SNMPv1, SNMPv2, SNMPv3, TCP, HTTP.
    On w/TCP: Enabled protocols: SIP, RTP, SNMPv3, TCP, HTTP.
    On w/Auth: Enabled protocols: SIP w/authentication, RTP, SNMPv3.

6.2.10 Calibrate

- **Ref Oscillator**
  - **Range:** -512 - 511
  - **Default:** —
  - **Details:** This setting is used to fine adjust (calibrate) the reference oscillator of the transceiver. The full range is approximately 10 ppm or 1 kHz (each step change gives approximately 1 Hz of frequency change). This setting should be used with care, and only when a calibrated frequency measuring instrument is connected to the radio.
- **RSSI reading**
  - **Range:** -10 to 10 dB
  - **Default:** —
  - **Details:** In order to measure the RSSI level exactly, there is a provision to calibrate the reading. Normally the reading is within +/- 2 dB without calibration, but it can be useful if two or more signals are being compared in a voting system. This setting will also calibrate the RSSI value that is sent over the RTP interface when using VoIP (ED-137) towards the radio.

6.2.11 Service Mode

- **Service Mode**
  - **Range:** On | Off
  - **Default:** Off
  - **Details:** Set the radio into 'service mode'. This will be reflected on the ED137B/C RTP stream. In this mode, only local control will work. Service mode is shown in the front panel display. The radio will revert to 'normal' operation after 10 minutes of inactivity or if set to Off from this menu.

6.2.12 Preset

- **Preset**
  - **Range:** Restore factory settings | Restore user settings | Save user settings | No change
  - **Default:** —
  - **Details:** Restores user and factory settings or saves user settings.
    Restore factory settings:
    This parameter will reset the unit and restore the settings that were set at the final bench testing at the factory. Use with care – all settings that has been changed later will be reset, including options that has been installed after the unit left factory. These must be reinstalled using the Upgrade tool.
    Restore user settings:
    This parameter will reset the unit and restore the settings that were set and saved by the user.
    Save user settings:
    This parameter will save the current settings of the unit to user settings.
    No change:
    This parameter will exit the Preset menu without restoring or recalling any settings.

6.3 Bite system group

TR-910 has a built in BITE system which constantly monitors critical functions in the transceiver. The measurement values can be accessed by opening the BITE menu. This is done by pressing scroll/select and then the BITE shortcut. It's then possible to scroll through all the measurements. If any values are outside specification an alarm will be displayed. The alarm will also be visible on the display with an alarm indicator icon.

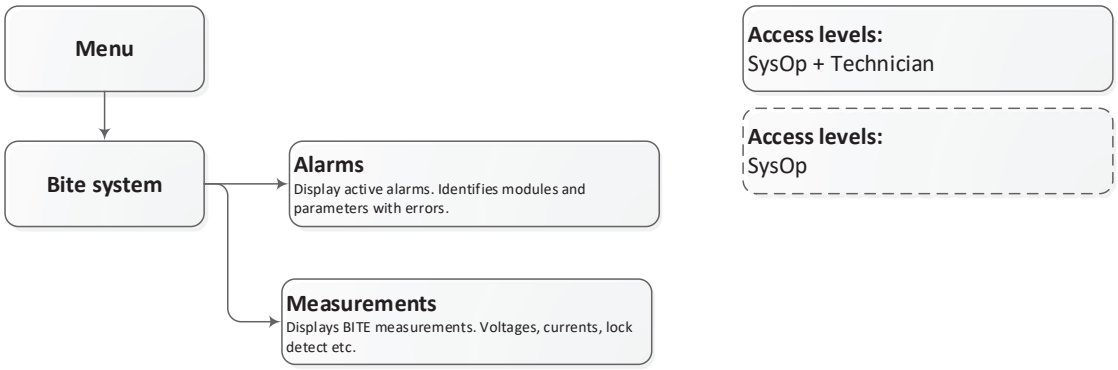

Figure 18: Bite system group

6.3.1 Alarm

- **Depends on the alarm status of the radio unit**
  - **Range:** —
  - **Typical:** No Alarms
  - **Details:** This view displays all active alarms in the unit. See Transceiver error conditions for more info.

6.3.2 Measurements

- **Forward**
  - **Range:** 30 – 43 dBm
  - **Typical:** N/A
  - **Details:** Displays the forward power in dBm detected at the output (directional coupler) of the PA module in Tx mode. The forward power is the average power; therefore, it may vary slightly with the modulation depth.
- **Reflected**
  - **Range:** 0 to Max Forward power
  - **Typical:** N/A
  - **Details:** Displays the reflected power in dBm detected at the output (directional coupler) of the PA module in Tx mode. The reflected power is the average power; therefore, it may vary slightly with the modulation depth.

- **VSWR**
  - **Range:** 0 to infinity
  - **Typical:** 1.0 to 1.2
  - **Details:** Displays the calculated VSWR from the forward and reflected measurements in Tx mode.
- **Modulation**
  - **Range:** up to 95 %
  - **Typical:** N/A
  - **Details:** Displays the measured modulation depth at the output of the PA module in Tx mode.
- **PA Temp**
  - **Range:** -30 to +85 °C (Alarm limit)
  - **Typical:** 0 to +55 °C (Alert limit)
  - **Details:** Displays the temperature measured on the PA module [°C].
- **Mod LO level**
  - **Range:** -19 to +12 dBm (Alarm limit)
  - **Typical:** -10 to +10 dBm
  - **Details:** Displays the level measured at the output of the Modulator module [dBm].
- **Modulator Lock**
  - **Range:** Lock / Unlock (alarm)
  - **Typical:** Lock
  - **Details:** Displays the lock status of the frequency synthesizer on the Modulator module.
- **Line level**
  - **Range:** —
  - **Typical:** N/A
  - **Details:** Displays the line input level to the transceiver unit in dBm (600 Ω).
- **RSSI**
  - **Range:** -10 to +110 dBµV
  - **Typical:** N/A
  - **Details:** Displays the received signal level (RSSI) in dBµV.
- **C/N**
  - **Range:** 0 - 50 dB
  - **Typical:** N/A
  - **Details:** Displays the Carrier/Noise level (C/N) on the received signal. The relation between the C/N value and the S/N value for a signal that is modulated with 30% is 17 dB. i.e. a signal with a C/N value of 50 dB will have a S/N value of 33 dB (30%).

- **FreqOffset**
  - **Range:** -20000 to 20000
  - **Typical:** N/A
  - **Details:** Shows frequency offset in Hz on incoming signal to the receiver. Note this will depend on the reference in the receiver. If an external transmitter that is calibrated to be accurate on frequency is used, the reference oscillator in the receiver can be adjusted to be exactly on the center frequency. This can be used to remotely calibrate the receiver, or to determine the frequency offset on an incoming RF carrier.
- **RxModLevel**
  - **Range:** 0 to 100 %
  - **Typical:** N/A
  - **Details:** Shows the modulation depth on the received signal. For a real signal from an airplane the measurement will fluctuate up and down. By using a calibrated transmitter with a sinus generator, it can be checked that the receiver receives the signal correctly.
- **AGC volt**
  - **Range:** 0 to 5 V
  - **Typical:** N/A
  - **Details:** Displays the internal AGC voltage in Rx mode.
- **Current**
  - **Range:** 0.1 to 6.0 A (alarm limit)
  - **Typical:** 0.1 to 5.0 A (alert limit)
  - **Details:** Displays the total current consumption (of the regulated 12 Volt) on the transceiver unit [A].
- **IF current**
  - **Range:** 20 to 120 mA (alarm limit)
  - **Typical:** 80 to 110 mA (alert limit)
  - **Details:** Displays the current consumption of the IF (Intermediate Frequency) circuit on the RF frontend module [mA].
- **LNA current**
  - **Range:** 20 to 90 mA (alarm limit)
  - **Typical:** 30 to 88 mA (alert limit)
  - **Details:** Displays the current consumption of the LNA (Low noise amplifier) on the RF frontend module [mA].
- **LO level**
  - **Range:** Min. -3 dBm (alarm limit)
  - **Typical:** 0 dBm +/-2 dB

- **Details:** Displays the level measured at the output of the local oscillator on the RF frontend module [dBm].

- **LO Lock**
  - **Range:** Lock / Unlock (alarm)
  - **Typical:** Lock
  - **Details:** Displays the status of the local oscillator on the RF frontend module.
- **DC Input**
  - **Range:** 9.9 to 32.2 V (Alarm limit)
  - **Typical:** 10.2 to 31.5 V (Alert limit)
  - **Details:** Displays the DC input supply voltage to the transceiver unit.
- **12 Volt**
  - **Range:** 10.8 to 14.8 V (Alarm limit)
  - **Typical:** 11.5 to 14.0 V (Alert limit)
  - **Details:** Displays the regulated 12 V supply on the Main module. The 12 V is used on several modules.
- **6 Volt**
  - **Range:** 5.0 to 7.0 V
  - **Typical:** 4.3 to 5.6 V
  - **Details:** Displays the regulated 6 V supply on the RF frontend module.
- **5 Volt**
  - **Range:** 4.3 to 5.6 V (Alarm limit)
  - **Typical:** 4.6 to 5.4 V (Alert limit)
  - **Details:** Displays the regulated 5 V supply on the Main module. The 5 V is used on several modules.
- **3.3 Volt**
  - **Range:** 2.9 to 3.6 V (Alarm limit)
  - **Typical:** 3.0 to 3.5 V (Alert limit)
  - **Details:** Displays the regulated 3.3 V supply on the Main module. The 3.3 V is used on several modules.
- **Battery Status**
  - **Range:** Unknown | AC | Charging | Error | 100 % | 75 % | 50 % | 25 % | Empty
  - **Typical:** N/A
  - **Details:** Displays the battery status on the BU-872 unit if present.
- **Battery Level**
  - **Range:** 0 to 100 %

  - **Typical:** N/A
  - **Details:** Displays the remaining battery level of the BU-872 unit if present.

- **Memory**
  - **Range:** N/A
  - **Typical:** N/A
  - **Details:** Monitors the free system memory.

6.4 System Info group

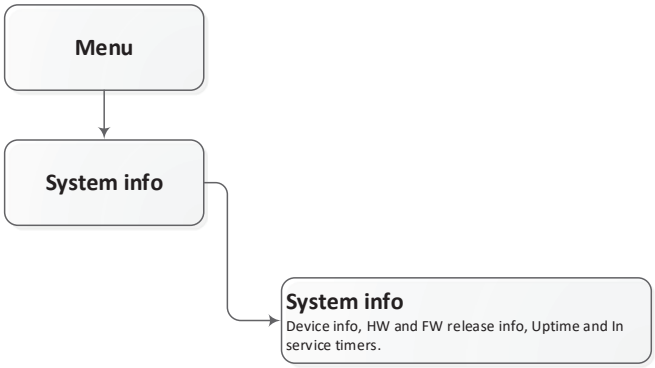

Figure 19: System info group

6.4.1 System info

- **Parameter:** Type
  - **Details:** Displays the name of the product. i.e. TR910
- **Parameter:** P/N
  - **Details:** Displays the part number (P/N) of the product, e.g. 103400
- **Parameter:** Frame ID
  - **Details:** The serial number of the frame were the radio is installed. If a receiver and a transmitter is installed in a common frame this can be used to have a unique ID of that frame. The parameter is configurable using MDT/RCMS software.
- **Parameter:** PID
  - **Details:** The ID of the product. i.e. 'RX OSL CONTROL' Recommended max length:15 characters. The parameter is configurable using the MDT/RCMS software.
- **Parameter:** Serial
  - **Details:** Displays the unit serial number.
- **Parameter:** Location
  - **Details:** Displays the location where the radio is located, i.e.: 'Tower'. This is text is configurable using the MDT/RCMS software.
- **Parameter:** SW MAJ
  - **Details:** Displays the major release number of the units' software. In the release identifier 6.00.0001, the 6 is the major release number.

- **Parameter:** SW MIN
  - **Details:** Displays the minor release number of the units' software. In the release identifier 6.00.0001, the 00 is the minor release number.
- **Parameter:** SW BUILD
  - **Details:** The Build number of the units' software, In the release identifier 6.00.0001, the 0001 is the build number.
- **Parameter:** SW REL
  - **Details:** The release date of the software in the format MMM DD YYYY (Jun 12 2020).
- **Parameter:** HW VER
  - **Details:** Displays the HW release of the various modules with part numbers and release status.
- **Parameter:** SNTP time
  - **Details:** Displays the current time obtained from a SNTP time server if the radio is connected to an SNTP (NTP) server.
- **Parameter:** Uptime
  - **Details:** The total time the system has been running since last power cycle.
- **Parameter:** In Service
  - **Details:** The total accumulated time the system has been running.

7 Failures and Corrective Actions

7.1 Alarms

If the internal BITE (Built-In Test Equipment) in the transceiver unit detects a failure, the Alarm indicator icon on the front display of the unit will be shown. In addition, the radio unit will send an automatically generated SNMP trap message on the Ethernet interface. TR-910 also have the capability to signal the alarm condition to external equipment using the remote interface of the unit with a dedicated signal.

Details about the alarm conditions are accessible in the ”Bite systems” menu. The alarm and messages are available in two levels. First level indicates the module that has failed. The next level provides more details about the problem that caused the alarm condition. The measurements that generate alarms are indicated by alarm limits in the Bite system chapter.

7.2 Alerts

Prior to some alarm conditions, an alert is sent as an SNMP trap message on Ethernet to the RCMS system. The measurements that generate these alerts are indicated by alert limits in the BITE system chapter.

7.3 System components

In the following (LRU) refers to the Lowest Replaceable Unit - and is normally the first line maintenance where the complete unit is replaced. (LRM) refers to the Lowest Replaceable Module and is the module within the unit that can be replaced. Repair at the LRM level normally requires a well-equipped workshop with appropriate tools for testing and calibration.

7.4 Transceiver error conditions

To investigate the BITE alarm indications and causes in the BITE menu please follow the instructions detailed below:

- Press **scroll/select** from the home screen to bring up the function screen.
- Press **Menu** to open the Main menu.
- Rotate to navigate to the Bite system menu and select by pressing **BITE**.
- Select **Alarms**.
- The displays indicate where the BITE system has detected failures. To view more details about the failure, select the module.
- If no alarm is detected, the menu will simply show “No alarms”.

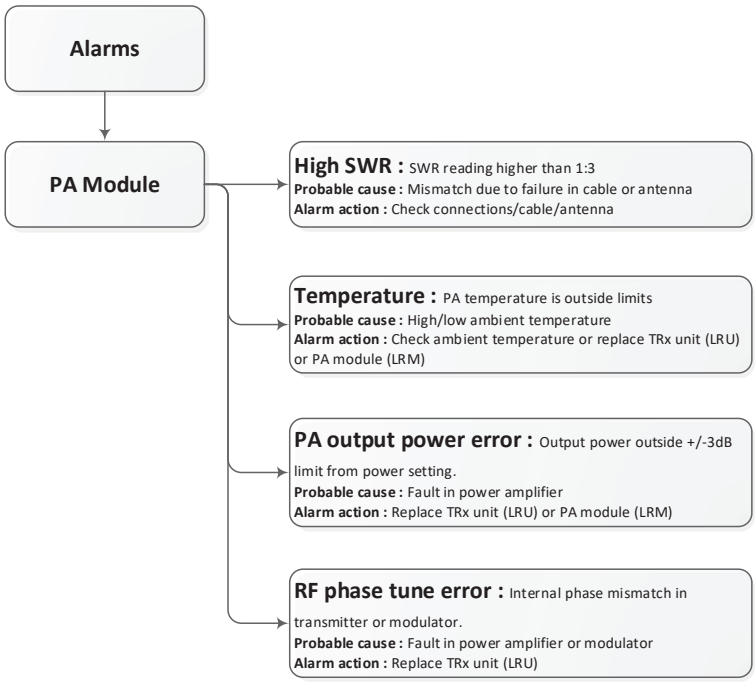

Figure 20: PA Module alarms

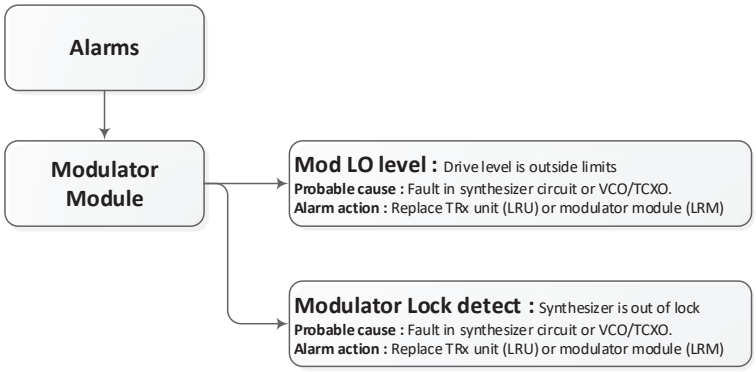

Figure 21: Modulator Module alarms

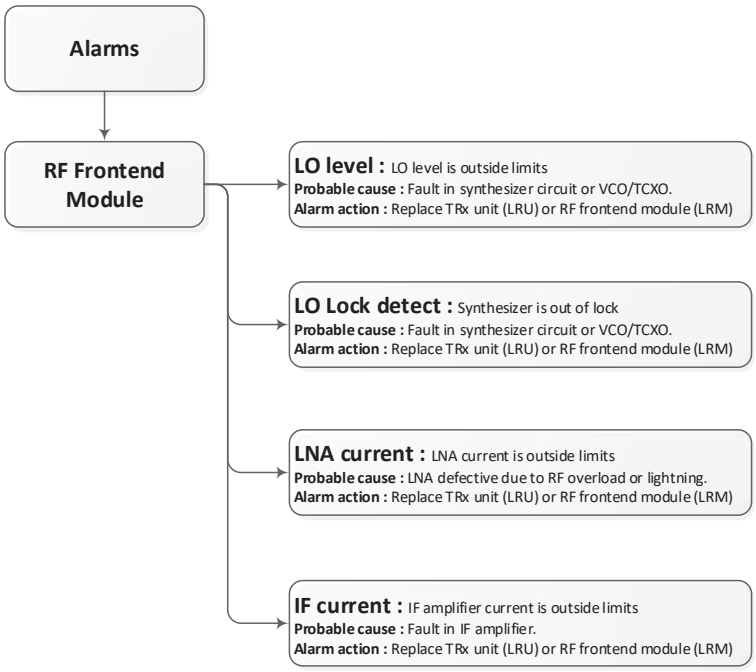

Figure 22: RF Frontend Module alarms

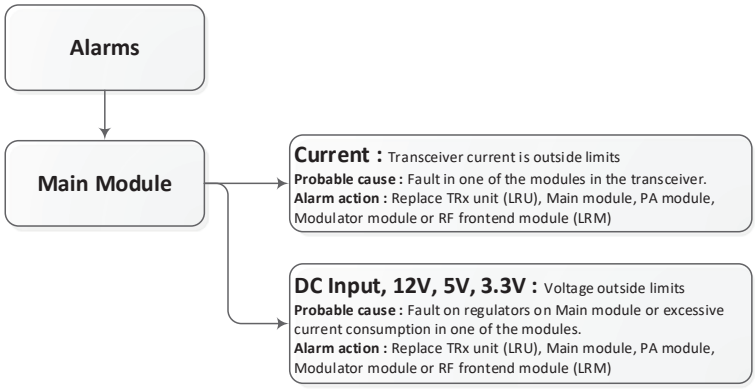

Figure 23: Main Module alarms

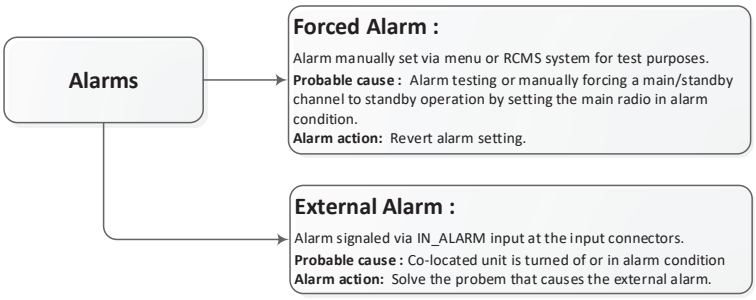

Figure 24: Forced and external alarms

8 Battery Unit

BU-872 is a battery unit for TR-910. There are two main applications where this battery pack is used:

Last Resort Radio
In this setup the battery pack provides the TR-910 with DC power if the mains power fails. The TR-910 can then maintain communication with the aircrafts even when all other communication equipment at the airport has failed.

Man Portable
In this configuration the TR-910 and BU-872 is placed in a handy carry bag and is also equipped with a compact antenna. The carry bag provides protection against mechanical wear and tear as well as protection against the elements.

8.1 Technical specifications

Table 25: BU-872 specifications

BU-872 Battery Unit		
Parameter	**Specifications**	
Operating temperature	-20 °C to +40 °C	
Storage temperature	0 °C to +30 °C	
Dimension	184 mm (W) * 205 mm (D) * 38.8 mm (H)	
Weight	< 1.5 kg	
Operating voltage	12 - 28 VDC, negative ground +/-10 %	
Power consumption	Charging: < 70 W Charging + transmit: < 130 W (less than 70 % remaining power). When cable between BU-872 & TR-910 is connected, the charging will be postponed when radio is transmitting.	
Battery type	Lithium-ion (SAFT)	
Charge time	< 4 hours at 25 % remaining power	
Battery capacity	77 Wh	
Operating time @ 10 W	Approx. 7 hours	10/30/60 duty cycle (Tx/Rx/Idle)
Operating time @ 5 W	Approx. 8 hours	
Operating time @ 2.5 W	Approx. 9 hours	

8.2 Front panel

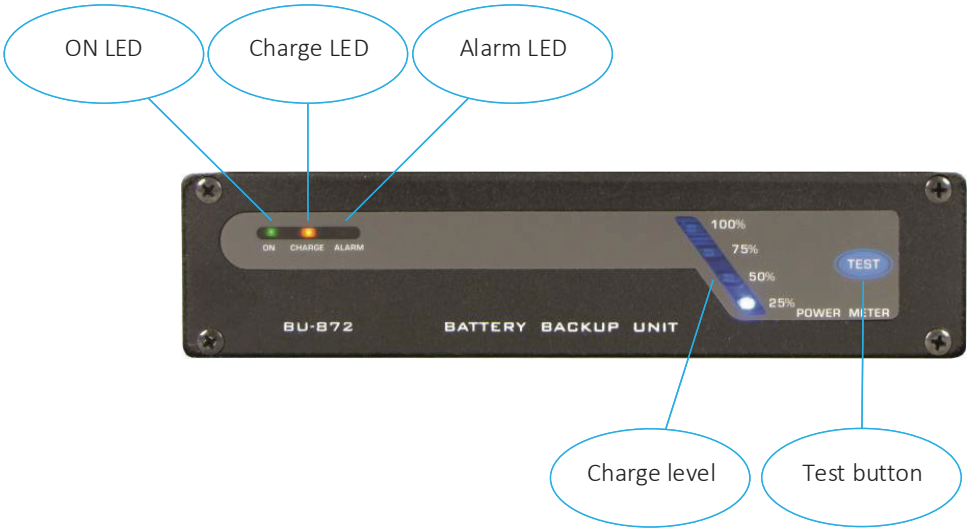

Figure 25: Front view of BU-872

8.2.1 LED Indicators

The following indicator LEDs can be observed on the front during operation:

ON		Green indicates when the unit is powered from a DC source.
CHARGE		Yellow indicates when the unit is charging the batteries. The LED will start to flash when the remaining charge time is less than one hour.
ALARM		Red indicates an Alarm condition in the unit. The probable cause will be indicated with one of the following LED combinations: • ALARM LED + 100 % LED illuminated: Charge timeout (>5 hour) • ALARM LED + 75 % LED illuminated: High temperature (>60 °C) The charging will start when temperature gets below 40°C.
100 % 75 % 50 % 25 %		The blue LED's indicates the remaining battery capacity on the POWER METER.

8.2.2 Test key

Pressing the **TEST** key will activate the POWER METER.

8.3 Rear connection

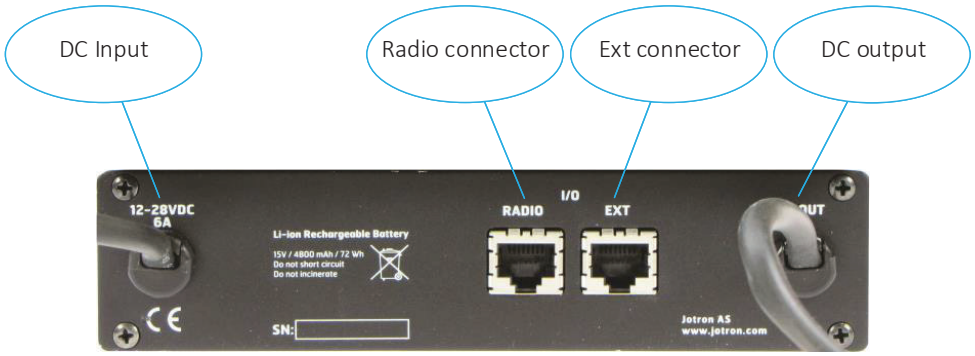

Figure 26: Rear view of BU-872

8.3.1 DC input

Connect to an external DC supply (+12V to + 28V +10%) or the AC/DC adapter supplied with the TR-910.

8.3.2 Radio connector

Connect to the I/O connector on TR-910 with a standard RJ45 patch cable.

8.3.3 Ext connector

Contains I/O signals from the TR-910 and Alarm output from BU-872.

Table 27: Ext connector, pin out

I/O connector		
Name	**Pin**	**Function**
EX-SPEAKER+	1	Bypassed from Radio connector pin #1
EX-SPEAKER-	2	Bypassed from Radio connector pin #2
MONITOR	3	Bypassed from Radio connector pin #3
PTT / GPIO	4	Bypassed from Radio connector pin #4
ALARM	5	Triggered by loss of DC input. Dry relay output makes contact to #7
LINE	6	Bypassed from Radio connector pin #6
ALARM	7	Triggered by loss of DC input. Dry relay output makes contact to #5
GND	8	Common ground

8.3.4 DC output

Connect to DC input on TR-910.

8.4 TR-910 Battery indicator

The indicator uses different icons to display status information of the Battery Unit. The indicator is located on the top right of the display.

When the transceiver is turned on, the radio checks battery status while displaying the question mark (?) icon. If the battery unit replies, the radio displays one of the following battery indicator icons as listed in Table 28. Otherwise, if the battery unit does not reply after a predetermined time the transceiver assumes that the radio is not equipped with a battery unit and no status icon is displayed.

Table 28: TR-910 Battery indicator

Icon	Description
	100 % remaining battery capacity. (Unit not connected to mains)
	75 % remaining battery capacity. (Unit not connected to mains)
	50 % remaining battery capacity. (Unit not connected to mains)
	25 % remaining battery capacity. (Unit not connected to mains)
	10 % remaining battery capacity. (Unit not connected to mains)
	Charging. (Unit connected to mains)
AC	Charging complete. (Unit connected to mains)
?	No communication with BU-872. Check interconnection cable. (Icon appears a short time at power on)

8.5 Battery maintenance

Batteries used in the BU-872 are of Lithium-ion type. To obtain maximum battery capacity, it might be necessary to perform a maintenance charge or a balance procedure.

8.5.1 Maintenance charge

Maintenance charge should be performed:

- When used as Man Portable or Last Resort with external power connected for a continual time, lasting more than four weeks: every other month. Maintenance charge is performed by disconnect the external power and then reconnecting the external power.

8.5.2 Balancing procedure

Balancing procedure should be performed:

- When used as Man Portable with frequent charge cycles: once a year or when battery capacity is noticeably reduced.
- When used as Last Resort with infrequently charge cycles: once a year.

8.6 Balancing procedure instructions

- Disconnect TR-910 and external power connected to the BU-872.
- Remove two screws situated in the upper side of the front, and two screws on the upper side of the rear side as shown on the illustration below:
- Remove top cover.
- Connect the balance circuit (PN:856991) to the discharge connector, see picture below.
- Discharge should last for more than 8 hours.
- Remove balance circuit.
- Assemble unit.
- Perform a full charge cycle.

Figure 27: Front side screws

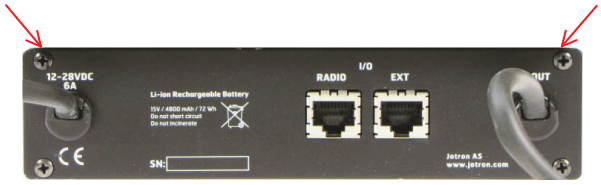

Figure 28: Rear side screws

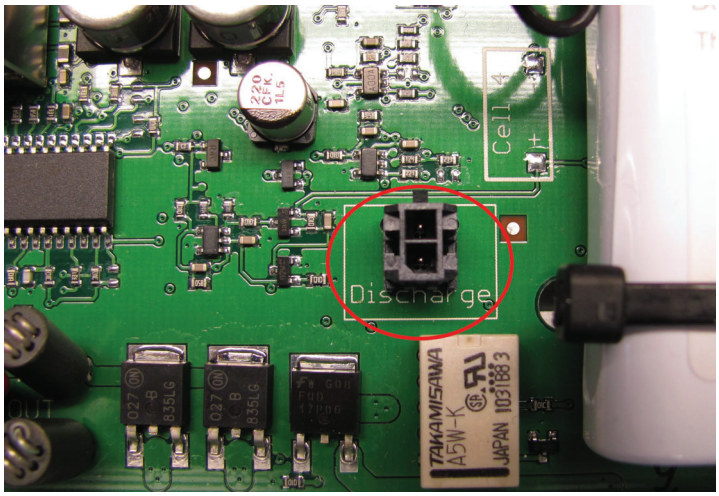

Figure 29: Discharge connector

8.7 Storage of BU-872

RECOMMENDATION FOR STORAGE CONDITIONS
ON Li-Ion SAFT BATTERIES

a) Initial charge

Initial state of charge of batteries before storage should be between 15% and 50% of capacity and is defined by taking into account:

• the maximum consumption of electronic devices

• the self-discharge of the cells (the higher the state of charge, the higher the rate of the self-discharge).

b) Minimum state of charge under storage:

A minimum state of charge corresponding to 3.62 V/cell is required at the end of the storage period to avoid any further 'Overdischarge state'.

Note: Overdischarge state ("cell under 2V") may affect the cells performances inside the battery.

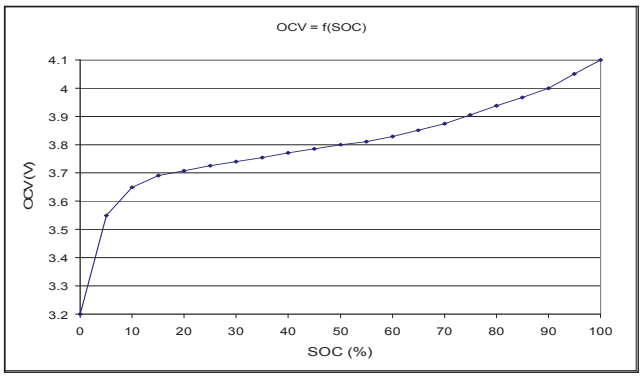

c) Warning:

If after storage, the battery voltage is low or even 0V, the battery protection circuit has probably gone into 'sleep mode'.

In such a case, the battery must be charged up as soon as possible in order to avoid the voltage of one or more cells to fall below a level where it damages the cell.

Therefore, try to wake up the battery with an appropriate charger.

If the battery doesn't take charge, the voltage of one or more cells has gone below a level where it is forbidden to recharge and where the electronics protects the battery.

R0362-05-rev 1 - 1 - October 2009

d) Temperature

Recommended temperature for storage: from 0 to +30°C, in a dry and clean surface, and preferably in its original packaging.

Possible excursions from -40°C up to +50°C.

Excursion between +50 and 60°C may result in higher self-discharge, lower performances and swelling on MP cells.

e) Conditions for storage

During all significant storage periods, a battery must preferably be disconnected from any external load (unless it is proved that the device, in its **switch off mode**, doesn't draw any leakage current from the battery).

For **short storage duration** (typically less than 3 months): follow §b).

For **long storage duration** (typically over 3 months and less than 1 year) the following procedure should be applied:

- For batteries with 1S circuit protection only, keep the battery voltage above 3.69V/cell.
- If not, then recharge the battery (with 24 min at C/2 rate). A recharge up to 50% is acceptable – see §a) - **initial charge**.
- Check the battery voltage regularly, at least every 6 months.
- For batteries with SMBus gas gauge, please refer to SAFT vendor.

f) Conditions for de-storage

After long storage duration, and before operational use, it is recommended to:

- fully discharge the battery to 0 V with a low current around 1A for rebalancing all cells to the lower state.
- preferably run a complete charge / discharge cycle for capacity recovery following the storage. If not done, it could need 2 to 3 cycles on use to recover the optimum capacity.
- recharge at the full capacity before use.

9 Using the radio with the VoIP interface

9.1 Introduction

This chapter contains detailed information both for programmers and for system integrators that will integrate the radio into an ED-137 compliant network, or in a static network configuration using RTP for audio streaming. A prerequisite to get the full understanding of this chapter is to read the ED-137c, Volume 1 and Volume 4 standards, these are available from Eurocae.
The radio has built in functionality to fully support the use of voice over IP for remote operation of the radios. Compared to analogue connections, VoIP has many advantages such as embedded signaling, voice quality, flexible location of equipment, IP environment, and more. Eurocae has delivered a series of standards for VoIP that describes the functionality (ED-136), the technical requirements for components (ED-137) and the network and security requirements (ED-138). When all components in a radio/voice control system fulfils the requirements defined in these documents, the system will work perfectly, independent of the specific vendors. As described in the following paragraphs, the Jotron TR-910 and 7000 series are fully compliant to ED-137 and is therefore suitable for use in systems using this standard.
The ED-137 standard utilizes the SIP protocol (RFC 3261) to establish communication to the radio, it uses RTP for audio streaming and it use R2S (empty RTP packets) for control signals when there is no audio to transfer. The ED-137 protocol enables the following functionality between a VCS and a radio:

- PTT (Push-to-Talk)
- PTT-ID identifiers that identify the transmitting device
- Squelch
- Quality index for the audio received (RSSI or Carrier/Noise) – used for best signal selection (BSS)
- Relative Time Delay information – used for CLIMAX operation (transmitters) and BSS (receivers)
- PTT mute flag
- Simultaneous Transmission Indication (SCT)
- PTT summation bit
- Dynamic delay compensation
- Multicast RX audio
- Unicast RX audio
- Unicast TX audio
- Linked sessions
- Vendor specific information
- Keep alive information

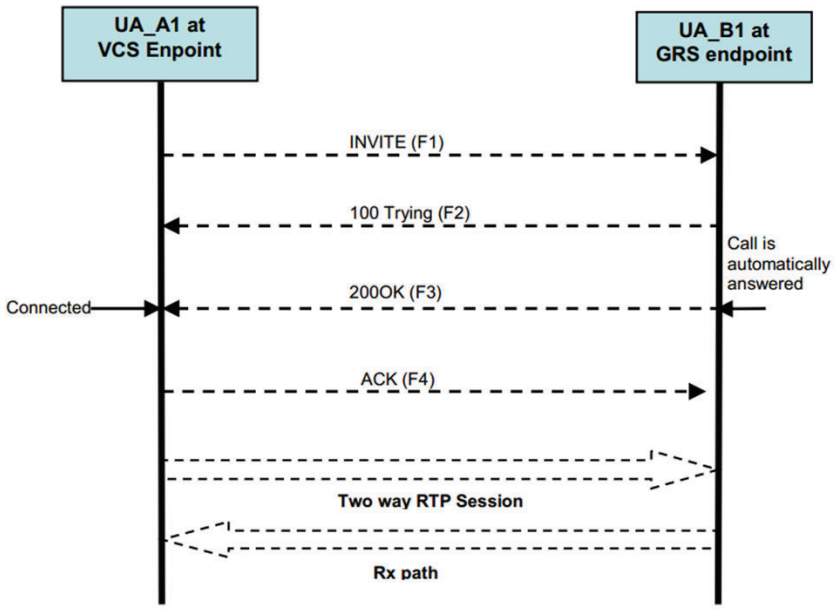

Figure 30: Example of successful SIP session establishment between VCS endpoint and GRS radio endpoint (Source: ED-137c)

9.2 ED-136 compliance

The Eurocae, ED-136 standard specifies the operational performance requirements that is related to Air-Ground Radio communication and recording, more specifically the standard describes the following configurations:

- Basic Air-ground radio communications
- Multi-carrier (Climax) operations
- Frequency Cross-coupled operations
- Best-signal selection (voting)
- Combinations of the above

Naturally, to fulfill these requirements, all system components; The VCS, the radios, the network must cooperate in the best way to achieve the wanted performance. The Jotron TR-910 and 7000 series is well suited in such systems with delay and timing performance well within what is required by the standards. For a detailed compliance matrix to ED-136 see appendix ?.

9.3 ED-137 compliance

The Eurocae, ED-137 standard, specifies the interoperability standards for VoIP air traffic management (ATM) components:

- Volume 1: Radio

- Volume 2: Telephone
- Volume 4: Recording
- Volume 5: Supervision

The Jotron TR-910 and 7000 series radios fully complies with Volume 1 (Radio), Volume 4 (Recording) and Volume 5 (Supervision). Volume 2 (Telephone) is not applicable for a radio. ED-137, Volume 1, contains several mandatory and some optional requirements for use in a radio system. The Jotron TR-910 and 7000 series fully complies with all mandatory requirements, and most optional requirements. For a detailed compliance matrix see appendix ?.
Specifically, some of the major optional requirements supported are:

- Support of C/N used as a best signal select quality index method in addition to the standard RSSI method. C/N has the advance over RSSI that it automatically will adapt to varying background noise that may have an impact of the intelligibility of received audio.
- Support of other codecs than the standard G.711. The radio can optionally support G.729 instead of the G.711 codec. G.729 has the advantage that the system may use far less bandwidth. For systems that has bandwidth constraints, this can have both a technical and economic impact.
- Linked Sessions. Linked sessions is described in ED-137 and is used to establish and maintain session from the same user, but from different equipment, in order to guarantee higher service availability.

In addition, the Jotron TR-910 and 7000 series includes methods that goes beyond the ED-137 specification. These methods can be used to further improve the user performance of the system considerably.

- Improved time synchronization for dynamic delay compensation.
  The requirement is less than 10ms to avoid echo on outgoing systems. Using the methods described the Jotron TR-910 and 7000 series can achieve synchronization down to less than 500µs when using round trip delay method and less than 200µs when using absolute timing. The advantage of this is that climax systems will sound better for pilots (less echo), and that best signal select systems for receivers have the potential to perform better, since a seamless transition between audio streams from different receivers can be performed unnoticeable to the user.
- Vendor specific fields in R2S and RTP headers.
  Vendor (Jotron) specific fields can be enabled in the R2S/RTP header from the radio. These fields contain he operational frequency, the operational status (keying, alarms, etc.) and the forward power from a transmitter. The advantage of this is that the frequency (in a multi frequency system) can automatically be reflected immediately on all connected systems, connected systems can immediately act on changes in operational status (e.g. alarm) and systems can use the measured forward power from the transmitter as status feedback to the user, or to automatically generate a synthetic sidetone to the operator.
- User priority within the radio ‘user list’:
  The radio has a user table containing up to 5 permitted users to the radio. By enabling the user priority function in the radio, this table will be a prioritized list, where the first user in the list have the highest priority. This feature allows systems with multiple users, such as a server system in addition to multiple directly connected users, to implement priority based on the username used when connecting to the radio. The system with the highest priority (normally a server) will always be guaranteed a connection to the radio.

- Extended frame (packet) size in the RTP payload:
  ED-137 use as a standard 20ms payload for the RTP audio, with the possibility to use between 10 and 30ms. Although these packet sizes work well in most systems, there are systems that can benefit considerably by using smaller or larger packet sizes than the sizes specified in the standard. Therefore, the Jotron TR-910 and 7000 series has an optional feature called 'extended VoIP' that enables frame sizes down to 5ms and up to 150ms. A shorter frame size (5ms) has the advantage that it will decrease the delay in a VoIP system at the cost of a slightly higher bandwidth. This feature is beneficial to use if there are no bandwidth constraints, typically this will be in a typical airport environment where fiber is used for the network between the sites. A larger frame size (up to 150ms) has the advantage that it will reduce the bandwidth consumption considerably, especially when using the optional G.729 codec, at the cost of a larger delay. This feature is beneficial to use if there are bandwidth constraints, typically when using a satellite connection to the radio site.

- Alarm handling:
  The radio may be configured to handle internal alarms from the BITE system in various ways. The preferred method depends on the implementation in the voice control system. The following methods are available as a configuration in the radio:

  – Stop SIP (default) Using this setting, the radio will immediately disconnect the connection to the VCS with reason 2000 'Internal error', when an alarm is detected.
  – No Action When set to 'No Action' the VCS must handle eventual switching between a main and a backup unit by reading the alarm bit from the radio's 'operstate' parameter (available as a vendor specific field, via SNMP or via TCP).
  – Stop keepalive Using this setting, the radio will stop the return keepalives when a failure (alarm) is detected. Using this method, the connection will time out at the VCS after the timeout period (default 2000ms). The timeout detection in the VCS can use this to switch to a backup connection.

9.4 Configuration when using ED-137 VoIP towards a voice control system

9.4.1 SIP initiation

Default settings:
SIP Port: 5060, Radio Username: '900', VCS Username: 'Server A', 'Server B', 'CWP A' or 'CWP B' Return RTP port (first): 42042, add 2 for each new connection to the radio (42044, 42046, ……)

When connecting to a radio, the voice control system (VCS) connects using the SIP methods described in the latest ED-137 (Volume 1) document. The default SIP port of the radio is the standard SIP port: 5060 The radio support the following SIP requests: INVITE, ACK, CANCEL, BYE and SUBSCRIBE. The SIP protocol is carried over the User Datagram Protocol (UDP). For details regarding the SIP protocol, see RFC 3261.

By default, the radio is configured with a predefined Radio username: **'900'**
The username is a text field and can be changed a name that more reflect the function or position of the radio, e.g. 'Radio', 'Radio_North', 'Radio_South', 'M118500', 'S118500', etc."

For safety, the radio is configured to allow only users that are defined in the user table.
(This is changed from previous versions of the radio that allowed all users)

There are two user tables in the radio, one for standard users that uses normal priority, and one for users that uses emergency priority to connect to the radio. The standard user table is set up with 4 default users, and the emergency user table is set up with 1 default user. These lists can be changed and expanded with up to 10 different usernames in each table. The radio can also be set up without a no user table (Accept all users), this will allow any user to connect to the radio but is not recommended as it will decrease safety of the system.
The default (predefined) standard users are: **'Server A', 'Server B', 'CWP A' and 'CWP B'.**
The default (predefined) emergency user is: **'Emergency'**

Both the radio username and the user tables (standard and emergency) may be edited by using either the Jotron MDT or Jotron RCMS configuration systems.

Example, using the default (predefined) settings:
The radio IP address is: 192.1.2.3
The server IP address is: 192.1.2.4
SIP – To contact: 900@192.1.2.3
SIP – From contact: Server A@192.1.2.4

There is no need to configure the radios with different usernames, all radios in the system can use the default if this is practical. The radios are still uniquely defined by their IP address. For improved safety it may be feasible to change the usernames to names that more reflect the functionality of the radio.

Other parameters in the SIP INVITE request to the radio, including the SDP parameters, should follow the ED-137c standard.
When a connection is established to the radio, the radio will use port 42042 as the first return port for the RTP/R2S communication stream. The second connection will use 42044, increasing by 2 for each new connection.

9.4.2 Configurable parameters used by ED-137 connections

The radio has several configurable parameters that may influence the way the SIP request from a VCS is handled.

- **Allow PTT summation (default DISABLED)**

  ENABLED: When the transmitter receives two (or more) audio RTP streams with the same PTT type, e.g. 'Normal PTT', the modulated RF signal will contain the sum of all audio sources.
  DISABLED: When the transmitter receives an audio RTP stream with the same PTT type, e.g. 'Normal PTT' the transmitter will continue to use the first signal, and the second signal will be locked out.

- **Allow coupling summation (default DISABLED)**

  ENABLED: When the transmitter receives an audio RTP stream with the PTT type set to 'Normal PTT', 'Priority PTT' or 'Emergency PTT' while another RTP stream with PTT type set to 'Coupling PTT' is already transmitted, the modulated RF signal will be the SUM of both RTP audio streams.

DISABLED: When the transmitter receives an audio RTP stream with the PTT type set to 'Normal PTT', 'Priority PTT' or 'Emergency PTT' while another RTP stream with PTT type set to 'Coupling PTT' is already transmitted, the 'Coupling PTT' signal will be interrupted and only the second RTP stream will be transmitted.

- **Enable linked sessions (default DISABLED))**

  ENABLED: The radio allows the use of linked sessions **DISABLED:** The linked session functionality in the radio is disabled, trying to establish a linked session using SIP INVITE will be declined by the radio by sending a 603 DECLINE with the WG-67 reason cause=2010 'linked session disabled'.

- **Terminate on frequency change (default DISABLED)**

  ENABLED: If the radio is connected to a VCS, the radio will terminate the connection to the VCS if the frequency is changed by a remote command or by the local user interface of the radio. The radio will in its BYE message send the reason: '2002 fid does not match'. **DISABLED:** If the radio is connected to a VCS, the radio will not terminate the connection if the frequency is changed.

  NOTE: This configuration parameter can be overridden by the SDP parameter 'NoFreqDisconn' which was introduced in ED-137c.

- **Allow duplicate VCS (default DISABLED)**

  ENABLED: connections. (URI = Username@IPADDRESS)
  Normally one connection from one URI should be enough, in some cases this functionality is used, e.g. for testing with multiple connections from a single VCS. **DISABLED:** The radio will not accept another SIP INVITE from a user agent that already have an active SIP session.

- **Enabled static stream (default DISABLED)**

  ENABLED: By enable the static stream functionality, it means that a radio can be used by a VCS user agent that does not use SIP to enable the session. The static RTP session is set up by using the following parameters:
  RTP out IP: The IP address of the VCS user agent
  RTP in IP : The IP address of the VCS user agent
  RTP in port: The RTP port that the VCS user agent will send the RTP packets to
  RTP out port: The RTP port that the radio will send the RTP packets to
  RTP frame size: The size of the audio frames (ms) that will be used towards the VCS (default 20)

  DISABLED: Static stream is not enabled

- **Max SIP connections (default 4)**
  The number of SIP connections can be set from 1 to 4 on a standard radio. Optionally, the number of SIP connections can be increased, up to 10. This parameter set the maximum permitted sessions, e.g. 2, before the radio will reject a new connection with the WG-67 reason: 2008 'Limit exceeded'

9.5 Configuration when using static VoIP towards a voice control system

The radio support static VoIP connections in addition to dynamic SIP connections using ED-137. This chapter contain information on how to set up a static connection and parameters associated with the setup.

VoIP protocol must be set to either:

- **ED137**
  If set to ED137, then 'Enable static stream' must be enabled for the radio to support static RTP. In this case the static RTP will always be 'standard RTP extended' (see below).

- **Standard RTP**
  When set to standard RTP, the radio will send and receive standard RTP packets without any extensions. This means that keying, squelch information, etc., must be derived from the radio in other ways. These ways can be using the SNMP parameters, or using the TCP protocol for control.

- **Standard RTP extended**
  When set to standard RTP extended, the radio will send and receive RTP packets that are extended with information from the ED-137 standard. I.e. parameters like keying, squelch, RSSI level, is available in the RTP headers. Using this method will be just like using ED-137, but without the initial SIP session to enable or connect to the radio.

VoIP codec
The VoIP codec is defined statically (opposed to negotiated in a SIP session when using ED-137), it can be either 'Alaw', 'µlaw', or another codec supported by the radio (optional).

RTP sync source
The RTP sync source (SSRC) can be configured, this can be used to identify the RTP stream, if multiple sources are going to the same interface on a remote voice server.

RTP out IP
This is the network or IP address of the remote server, VCS or control position that the audio and keepalive packets shall be sent to.

RTP in IP
This is the network or IP address that will receive.

9.5.1 Bandwidth considerations when using VoIP

The peak ethernet bandwidth used by VoIP systems mainly depends on 2 factors:
- The voice codec in use
- The frame size of the audio packets (how much audio is transferred in each packet)

As standard ED-137 uses G.711 codec for audio. This codec compresses 13- or 14- bit audio samples down to a 64 kbit/s audio stream consisting of 8000 * 8 bits audio packets per second. At the trade-off of losing some

audio quality (MOS score decrease from 4.1 to 3.9), a much more efficient codec, G.729 may be used. This codec is optionally available in the radio. The G.729 codec compress 13-bit audio samples down to an 8 kbit/s audio stream consisting of 1000 * 8 bits audio packets per second. At first glance, a band with reduction of 8 times should be achievable since the G.729 codec only uses 1/8 of the bandwidth compared to G.711. This is not the case, since much of the information passed is signaling and header information from the ethernet protocol, the udp protocol and the rtp protocol. Using the standard ED-137 frame size of 20ms, a system using G.711 will use approximately 102 kbit/s, while a system using G.729 will use about 46 kbit/s, or about 45% of the bandwidth used for G.711. Since G.729 also use a look ahead buffer, there is also a 10ms additional delay introduced when using this codec. A larger saving in bandwidth consumption can be achieved by increasing the frame size considerably. Be aware that this also increase the one-way delays. This trade-off can often be acceptable since communication channels using satellite already have a large delay caused by the propagation time over the satellite link. The table below list the bandwidth when using different codecs and different frame sizes, and also the delay compared to using standard G.711, 20ms frame size.

Notably, for a system where the radios and controller position are located close to each other with a good network between them, a frame size of 5 ms may be used together with G.711 codec for best audio performance. Such a system will require an ethernet bandwidth of about 214 kbit/s but will have 15ms less delays than a 'default' system.

On the other extreme, a satellite system may utilize the G.729 codec and use a frame size of 150ms. This system will only consume about 12.5 kbit/s, at the trade-off of being delayed 140 ms more than the 'default system'. Satellite system already have a one-way delay in excess of 400 ms, to add another 100 ms is not a large trade-off compared to the gain achieved from the reduced bandwidth.

Codec	**G.729**	**G.729**	**G.729**	**G.729**	**G.729**	**G.711**	**G.711**	**G.711**	**G.711**	**G.711**		
Frame size [ms]	10	**20**	30	100	150	5	10	**20**	40	100		ms
Keep alive period	200	**200**	200	500	500	200	200	**200**	200	500		ms
Ethernet frame	38	**38**	38	38	38	38	38	**38**	38	38		octets/frame
IP header	20	**20**	20	20	20	20	20	**20**	20	20		octets/frame
UDP header	8	**8**	8	8	8	8	8	**8**	8	8		octets/frame
RTP header (std)	12	**12**	12	12	12	12	12	**12**	12	12		octets/frame
ED-137 extension (min)	8	**8**	8	8	8	8	8	**8**	8	8		octets/frame
ED-137 extension (max)	16	**16**	16	16	16	16	16	**16**	16	16		octets/frame
Sound samples	10	**20**	30	100	150	40	80	**160**	320	800		octets/frame
Number of frames	100	**50**	33	10	7	200	100	**50**	25	10		frames/sec
Octets/frame idle	86	**86**	86	86	86	86	86	**86**	86	86		
Octets/frame min voice	96	**106**	116	186	236	126	166	**246**	406	886		
Octets/frame max voice	104	**114**	124	194	244	134	174	**254**	414	894		
Bandwidth req idle	3.4	**3.4**	3.4	1.4	1.4	3.4	3.4	**3.4**	3.4	1.4		kbits/sec
Bandwidth req min voice	76.8	**42.4**	30.9	14.9	12.6	201.6	132.8	**98.4**	81.2	70.9		kbits/sec
Bandwidth req max voice	**83.2**	**45.6**	**33.1**	**15.5**	**13.0**	**214.4**	**139.2**	**101.6**	**82.8**	**71.5**		kbits/sec
Delay compared to G.711 20ms	0	**10**	20	90	140	-15	-10	**0**	20	80		ms

Figure 31: One-way bandwidth requirements VoIP

9.5.2 Delay considerations

Delay in VoIP systems is an important parameter, that influences the user experience and performance considerably. The delay in a VoIP system depends on the radio, the network environment and the voice control system. The Jotron TR-910 and 7000 series radios is development with the focus on minimizing the delay in all parts of the system. If used in a good network environment, with low latency and sufficient bandwidth, the Jotron TR-910 and 7000 series VoIP radio can be configured to operate with minimum frame size and minimum jitter buffers to optimize the audio delay performance.

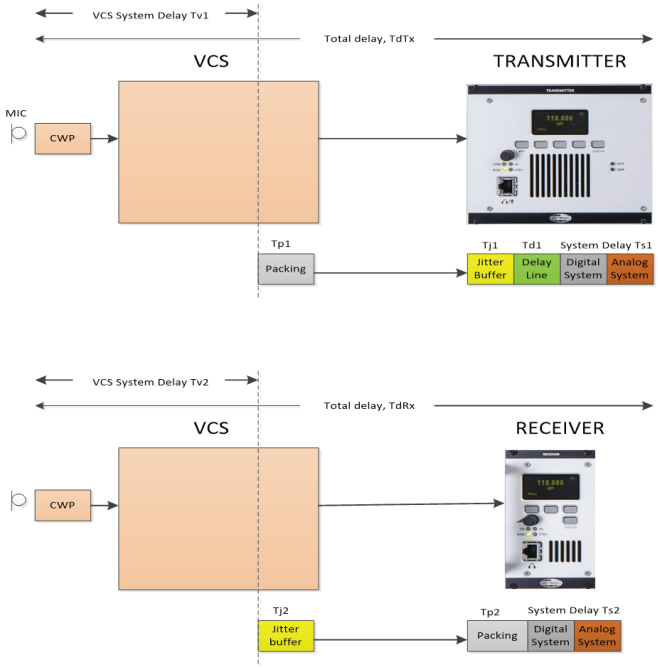

Figure 32: Delay in a VoIP radio system

For a transmitter, the delay is composed of the following elements:

- Delay in the CWP/VCS (buffering, packetizing): Tv1 + Tp1
- Delay in the radio (including the VoIP interface): Tj1 + Td1 + Ts1
- Delay in the network: Tn

Similarly, for a receiver, the delay is composed of the following elements

- Delay in the radio receiver (including the VoIP interface): Ts2 + Tp2
- Delay in the CWP/VCS: Tj2 + Tv2
- Delay in the network: Tn

The Jitter buffer in the transmitter can be minimized by configuring the transmitter to use adaptive jitter buffer for the voice packets (default). An adaptive jitter buffer automatically adapts to varying delay, or jitter, caused

by the transport layer (network). If the jitter is 0, or close to 0, the jitter buffer will be at its minimum. If, on the other hand the jitter is large, several packets may be needed in the buffer to achieve uninterrupted voice transmission on the air interface. Using adaptive buffers ensures that the delay is optimized to varying conditions. The jitter buffer may also be set to a fixed value, if that is more desirable. The Delay line is only used when the transmitter is used for climax operation (multiple transmitters) and is normally 0. The System time (Ts1) depends on delays in the digital and analog parts of the radio system. The digital part is processing done when decoding incoming audio packets and the digital modulation process, the analogue part is the delay caused by the analog radio system.

Packet Size	5	10	20	50	100	150
Tj1, minimum	2	2	2	2	2	2
System delay, Ts1 (G711)	6	6	6	6	6	6
Total delay, transmitter (G711)	**8**	**8**	**8**	**8**	**8**	**8**
System delay, Ts1 (G729)	-	7	7	7	7	7
Total delay, transmitter (G729)		**9**	**9**	**9**	**9**	**9**

Figure 33: Delays in a Jotron transmitter used for VoIP vs various codecs and packet size

From the table above, the transmitter only introduces an additional delay of 8ms when using the G.711, inclusive all buffers and system delays, this is on a perfect network where the delay and jitter is 0.
When used with a Jotron RRC remote control, the total transmitter voice delay that can be achieved is about 38ms when using 20ms packets, and as little as 23ms when using 5ms packets.

Packet Size	5	10	20	50	100	150
Packing, Tp2	5	10	20	50	100	150
System delay, Ts2 (G711)*	6	6	6	6	6	6
Total delay, receiver (G711)	**11**	**16**	**26**	**56**	**106**	**156**
System delay, Ts2 (G729)	-	6	6	6	6	6
Look ahead delay (G729)		10	10	10	10	10
Total delay, receiver (G729)		**26**	**36**	**66**	**116**	**166**

Figure 34: Delays in a Jotron receiver used for VoIP vs various codecs and packet sizes

A Jotron receiver introduces a delay that is dependent of the packet size, for the ED-137 default packet size of 20ms, the total delay is 26ms. For a system using 5ms packets the total delay is as little as 11ms before the voice packet is sent to the network from the receiver. When using the Jotron RRC remote control, the total receiver voice delay that can be achieved is less than 56ms when using 20ms packets, and as little as 26ms when using 5ms packets, given that the network delay and jitter is 0.

Depending of the configuration of the radios, the network environment and the implementation in the VCS, round trip delay down to less than 50ms is achievable for a radio system, including all system components. This is compared to the ED-136 requirement where the maximum round trip delay may be as high as 260ms for a VoIP radio system.

9.5.3 Vendor specific fields

The radio may transmit some additional fields as 'vendor specific fields' in the return RTP/R2S path from the radio. These fields contain additional information that is useful in a voice control system to provide real time information to the user/controller about the system.
To activate the Jotron extended headers, an additional SDP parameter must be given in the SIP INVITE to the radio:

a=JotronParameters:on

When this parameter is given in the SIP invite the radio will provide this information, depending on the type of radio:

Parameter	Products	Extension type	Description
OperState	TA-7650, TA-7650C, TA-7630U, TA-7650U, RA-7203, RA-7203U, RA-7203C, RGW7700, TR-910	0x0B	Contains real-time various information with regards to the operational state of the radio, such as squelch, PTT, alarm, etc.
Frequency (ICAO)	TA-7650, TA-7630U, TA-7650U, RA-7203, RA-7203U, RGW, TR-910	0x0C	Contains real-time information of the operational frequency of the unit.
Maritime CH	TA-7650C, RA-7203C	0x0D	Contains real-time information of the operational channel on a maritime radio.
Forward Pwr	TA-7650, TA-7650C, TA-7630U, TA-7650U, TR-910	0x0E	Contains real-time information of the output power of the unit.

Operstate

The operstate is a variable that is transmitted with a length dependent of the firmware version. The parameter contains a total of 16/32 bits, the length is given by the length field. The bits are numbered from left to right, i.e. bit no 0 is the left-most or most significant bit.

Parameter	Bit no	Function (1 = Active, 0 = Not active)
KeyInp	0	An active key input source has been detected, or the txBusy on a receiver is set to low input.
Forced PTT	1	The radio is forced to the key (PTT) state by a software command
Squelch (RX) KeyConf (TX)	2	On a receiver this signals that the squelch is open. On a transmitter this is a software confirmation from the transmitter that the Power Amplifier has been keyed, and a RF signal is produced.

Parameter	Bit no	Function (1 = Active, 0 = Not active)
Forced SQ	3	The squelch is forced to open by a software command (RX only)
Alarm	4	The radio is in an alarm state caused by an error detected by the internal BITE (Built In Test Equipment) system.
Forced Alarm	5	The radio is forced into an alarm state by an external software command.
Standby	6	The radio is in standby state
Forced Standby	7	The radio is forced into a standby state by an external software command.
Low power	8	The radio is in a low power state (TX only)
Forced low power	9	The radio is forced into a low power state by an external software command (TX only)
Forced mute	10	The radio is forced into mute state by an external software command. (RX only)
Alert	11	The radio is in an alert state caused by a potential error detected by the internal BITE (Built In Test Equipment) system.
N/A	12	Not used
RS232 active	13	The RS232 on the rear, or the USB interface on the front panel of the radio is in use. This is used to detect that a MDT (Maintenance Data Terminal) is connected to the front panel of the radio.
AC	14	The radio is operated from an AC power source
SCT (RX) Timeout (TX)	15	The receiver has detected simultaneous call. This bit is output as a warning (RX) The transmitter has timed out because an (analogue) PTT signal has been applied to the transmitter longer than the configured timeout.
Select In	16	The Select input signal on the unit is activated
VoIP Timeout	17	One or more of the active VoIP streams has timed out due to the setting of the TxTimeout parameter.
Telsa filter busy	18	The Telsa filter has received a new frequency command and is busy setting the new frequency

Frequency (non-maritime radios only)

The frequency is sent as a fixed integer that contains the frequency in “ICAO” format. I.e. both the operating frequency as well as the channel spacing is contained in this number. The full interpretation of the number is (e.g.):

127000 = 127.0000 MHz, 25 kHz Channel spacing
127005 = 127.0000 MHz, 8.33 kHz Channel spacing
127010 = 127.0083 MHz, 8.33 kHz Channel spacing
127015 = 128.0167 MHz, 8.33 kHz Channel spacing
127025 = 127.0250 MHz, 25 kHz Channel spacing
127030 = 127.0250 MHz, 8.33 kHz Channel spacing
127035 = 127.0333 MHz, 8.33 kHz Channel spacing

127040 = 128.0417 MHz, 8.33 kHz Channel spacing

Maritime channel (maritime radios only
The maritime channel is sent as a text string that contains the current operating channel. The text string can contain both the standard IMO defined maritime channels as well as private channels programmed into the radio. The parameter will be an ASCII character string that contains the channel. E.g. '70', '16', 'PRIV', etc.

Forward power (transmitters only)
The forward power is output as an integer that contains the forward power in 1/10 dBm. E.g. the value 472 is equal to 47.2 dBm.

Delay compensation when using transmitters in a Climax offset system
Time synchronization is critical when the transmitters are used for AM Climax operation in ATC communication. Therefore, it is a requirement to synchronize such systems within 10ms. The methods used for this synchronization is described in ED-137; CLD, MAM and RMM. These methods already have an accuracy of less than 2ms, even on networks with poor quality – characterized by long delays and large jitter.

The Climax Time Delay Feature, CLD, is described in ED-137c, volume 1, Ch. 5.6.3. This function allows the VCS to set a delay in a transmitter using either:

- Relative delay, i.e. the voice packets are delayed by the set delay before transmitted on air.
- Absolute delay, i.e. the timer in the voice packets are mapped to the absolute time transmitted in an RMM or a MAM message

The Jotron TR-910 and 7000 series support both methods of synchronization.

A limit for the CLD parameter defined in ED-137c is that it can only contain values up to 127, 127 corresponds to a delay of 254ms. In some application, specifically those where a satellite path is included requires a larger delay than 254ms. Therefore, the Jotron transmitters support that the length field is set to 2 and a value of up to 1023 can be set using this method, this corresponds to a delay of 2046ms.

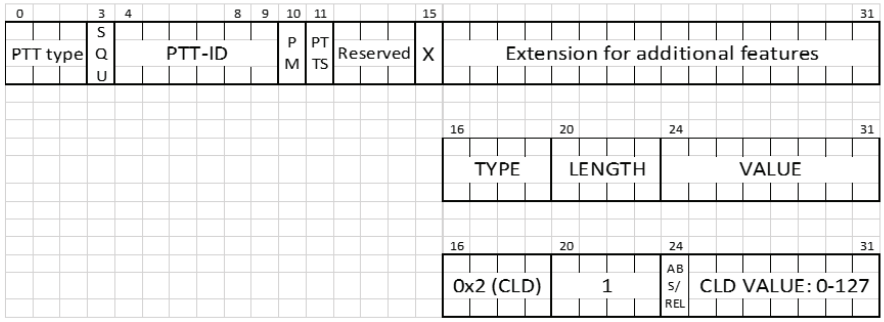

Figure 35: Standard coding of CLD, max delay 256 (CLD=127)

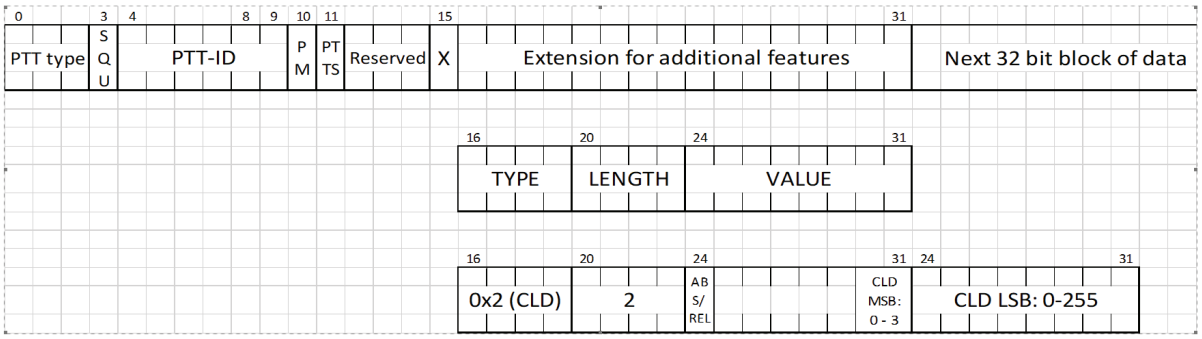

Figure 36: Extended coding of CLD, max delay 2046 (CLD=1023)

Using absolute time synchronization

Requirements for using Absolute time:

VCS:

The VCS must support RMM, MAM and CLD as described in ED-137C. Use RMM/MAM to measure the one-way delay and Use CLD to set the delay in the transmitter. It must have a precise clock, derived from a local NTP source. Finally, the VCS must have a continuously running RTP_TIMESTAMP counter.

Radio (Transmitter).

Must be synchronized to an external NTP source that is locally derived from GPS. This is important to synchronize the audio between two or more sites. The radio support RMM, MAM and CLD as described in ED-137C. The radio will send a MAM response to an RMM request. In addition, the radio (transmitter) support setting an absolute delay using CLD.

The accuracy that can be archived using NTP is within +/- 250 us.

9.5.4 Delay compensation when using receivers in a best signal select system

When two or more receivers are used in a best signal select (BSS) system, the differential time delay between the receivers may be critical, depending of the implementation in the BSS system. When the time delay to the receivers are known, it is possible for the VCS to synchronize the audio streams between the receivers. In this case the delay compensation is done in the VCS system.

Note that for delay compensation in receivers, CLD Is not supported but RMM and MAM can be used to measure the time delay between receivers, this is implemented as described in ED-137C.

9.6 Configuration to use the radio against an ED-137 VoIP recorder

Both the transmitter and the receiver can be recorded using an ED-137 compliant recorder. The radios support both ED-137B and ED-137C volume 4 (Recording). In case ED-137C recording is used, the radios support both Mode 1 and Mode 2.

To ensure that the recording contains the actual transmitted voice on a transmitter, the audio recording stream from a transmitter will be the off-air sidetone from the transmitter. The transmitter demodulates the transmitted radio signal and converts the audio to an outgoing RTP stream. The receiver recording stream is a copy of the demodulated incoming radio signal.

IP recording can be used independent of audio input and output sources (VoIP or analogue). The radio units support up to 3 individual recorders.

9.6.1 Configuration

The recorder streams are configured using either the RCMS or the MDT software. For each recorder stream, the following must be configured:

- **Client ID** (Used by some recorders to identify the recorder source)
- **IP address** this is the IP address of the recorder
- **Ping interval** the interval in seconds for which the radio 'pings' the recorder to check that the connection is live even if there is no audio to record.
- **Codec** the audio codec used for the recorder stream. The codec can be selected from a list. Available options are: MuLaw (G.711 µLaw), ALaw (G.711 ALaw), PCM (8-bit PCM). If the radio is delivered with G.72 option, G.729 will also be available for recording.
- **Transport** the transport method used for the recorder stream. Available options are RTSP (Real Time Streaming Protocol (RTSP) using RTP over an interleaved TCP for audio), TCP (RTSP using RTP over an independent TCP connection for audio), UDP (Real Time Streaming Protocol using RTP over an independent UDP for audio), Plain (RTP over UDP for audio, i.e. RTSP is not used. This setting is used for recorders that are not compliant to ED-137).
- **Frame size** this is the size of each audio packet, i.e. the size of each audio packet that is sent to the recorder. Larger frame size will reduce required IP bandwidth, larger size will decrease the bandwidth. Use the default bandwidth of 20ms if there is no reason to consider differently.
- **Record path** the record path is used internally in the recorder to differentiate between the various sources that are recorded.
- **RTSP port** the port used to communicate with the recorder, default RTSP port is 554.
- **Recorder status** the status of the connection, 1 (idle – not connected), 2 (connected).

Master Record
In addition to the settings that are individual for each recorder stream, **Master Record** must be enabled for the radio to initialize the recorder streams.

10 List of Tables and Figures

List of Tables

4 Antenna List 4
7 Radio models covered by this manual 11
8 Accessory list 12
8 Accessory list 13
9 Available radio options 13
10 General specifications 14
11 Transmitter specifications 15
12 Receiver specifications 16
13 Applicable standards 17
14 Indicator icons 18
15 Mic/Headset connector, pin out 20
16 USB pin out 20
17 DC connector, pin out 21
18 LAN interface connector, pin out 22
19 I/O connector, pin out 22
19 I/O connector, pin out 23
22 User access levels 37
23 Illustration of auto bandwidth adjustment 38
24 Submenus available 43
25 BU-872 specifications 67
27 Ext connector, pin out 69
28 TR-910 Battery indicator 70

List of Figures

1 Operation of Man Portable 5
2 Installation of vehicle antenna 5
3 Front view of TR-910 18
4 Rear view of TR-910 21
5 DC-connector 21
6 TR-910 DE 25
7 TR-910 MP 26
8 TR-910 MP 27
9 TR-910 MP 28
10 TR-910 MP 29
11 TR-910 VE 30
12 TR-910 LR 31
13 TR-910 SR 32
14 TR-910 LR-SR 33
15 TR-910 OF 34
16 Configuration group 44
17 Service menu group 47
18 Bite system group 56

19 System info group 61
20 PA Module alarms 64
21 Modulator Module alarms 64
22 RF Frontend Module alarms 65
23 Main Module alarms 65
24 Forced and external alarms 66
25 Front view of BU-872 68
26 Rear view of BU-872 69
27 Front side screws 71
28 Rear side screws 71
29 Discharge connector 72
30 Example of successful SIP session establishment between VCS endpoint and GRS radio endpoint (Source: ED-137c) 76
31 One-way bandwidth requirements VoIP 82
32 Delay in a VoIP radio system 83
33 Delays in a Jotron transmitter used for VoIP vs various codecs and packet size 84
34 Delays in a Jotron receiver used for VoIP vs various codecs and packet sizes 84
35 Standard coding of CLD, max delay 256 (CLD=127) 87
36 Extended coding of CLD, max delay 2046 (CLD=1023) 88

NORWAY / HEADQUARTERS
Jotron AS
Ringdalskogen 8
3270 Larvik, Norway
Tel: +47 33 13 97 00

SINGAPORE
Jotron Asia Pte. Ltd.
10 Ubi Crescent, Ubi Techpark
Lobby B, #05-11/12, Singapore 408564
Tel: +65 65 42 63 50

USA
Jotron USA, Inc
6300 Rothway Street, Suite C
Houston, TX 77040, USA
Tel: +1 713 268 1061

UK
Jotron UK Ltd.
Crosland Park, Cramlington
NE23 1LA, UK
Tel: +44 1670 712000

CHINA
Norway Jotron AS Beijing
Representative Office (ATC business)
No. 1204 room, building D
Tiejian plaza, Chaoyang district Beijing
100012 China
Tel: +86 10 5619 6464

sales@jotron.com

JOTRON
Performance for Life

jotron.com