Tron UAIS TR-2500

Installation Manual

JOTRON Electronics a.s

P.O. Box 54, NO-3280 Tjodalyng
Tel: +47 33 13 97 00, Fax: +47 33 12 67 80
www.jotron.com

AMENDMENT RECORD

AMDT	INCORP. BY	DATE	PAGE(S)	VERSION
1	ES	06.11.2003	50	A
2	ES	20.11.2003		B
3	FIT	7.1.2004	8,9,18,22 ,23,25,48	C (EM4139)
4	GH/ES/FIT	27.02.2004	Cover,1,3,5,6, 14,15,20,21-24, 31	D (EM4191)
5				
6				
7				
8				
9				
10				
11				
12				
13				
14				
15				
16				
17				
18				
19				
20				

The information in this book has been carefully checked and is believed to be accurate. However, no responsibility is assumed for inaccuracies.

CAUTION!
This equipment contains CMOS integrated circuits. Observe handling precautions to avoid static discharges which may damage these devices.

JOTRON Electronics a.s reserves the right to make changes without further notice
to any products or modules described herein to improve reliability, function or design.
JOTRON Electronic a.s does not assume any liability arising
out of the application or use of the described product.

LIST OF CONTENTS

1 SYSTEM CONFIGURATION 5
2 AIS in an Operational Environment 5
2.1 Tron UAIS TR-2500 5
3 EQUIPMENT LIST 6
3.1 Standard supply 80400 6
3.2 Optional supply 6
4 MOUNTING 7
4.1 Antenna Unit 7
4.1.1 GPS antenna location 7
4.1.2 VHF antenna location 7
4.1.3 GPS/VHF combined antenna 7
4.2 Cabling 9
4.2.1 Cable installation 10
4.3 Transponder unit 10
4.3.1 Desktop Mounting 10
4.3.2 Roof Mounting 11
4.3.3 Flush Mounting 12
4.3.4 19``Rack Tray Mounting 13
4.4 Junction Box 14
4.5 Connection cable between Transponder and Junction Box 15
5 WIRING 15
5.1 System block diagram 15
5.2 Input / Output signals 16
5.2.1 Connections to Junction Box 16
5.2.2 Pilot Plug Connector 18
5.2.3 External Display Connector 18
5.3 Tron UAIS TR-2500 Rear Connections 18
5.3.1 VHF Antenna Connector 18
5.3.2 GPS Antenna Connector 18
5.3.3 24VDC Connector 18
5.3.4 Ground Tag (GND) 18
5.3.5 Extra I/O Connector 19
5.3.6 Programming Connector 19
5.3.7 Junction Box Connector 19
5.3.8 LAN Connector 19
6 INTERCONNECTION DIAGRAM 20
6.1 DC Power Input/output of Junction Box 21
6.2 Description of 24VDC connection to transponder 21
6.3 Description of Junction Box Connector at TR-2500 22
6.3.1 Signal state definitions 22
6.4 Description of Pilot Plug connection to Junction Box 23
7 FIRST START UP 24
7.1 Description of buttons 24
7.2 Connecting power 24
8 OUTLINE DRAWINGS 29
8.1 Transponder Jotron UAIS TR-2500 29
8.2 Junction Box 30
8.3 Comrod AC17-AIS Combined Marine VHF and GPS Antenna 31
8.4 Procom AIS 2/ GPS Dual band Antenna 32
8.5 Procom CXL 2-1/l Maritime VHF Antenna with FLG Bracket 33
8.6 Procom GPS 4 Antenna 34
8.7 BNC connector 95299, Suhner 24BNC-50-2-13/133NE 35

8.8 FME Connector Female 80588, Holund 40100 35
8.9 BNC Connector Male 80577, Suhner 11BNC-50-2 / 133NE 36
8.10 TNC Connector Male 80578 Suhner 11TNC-3-6 / 133NE 36
8.11 N Connector Male 80581, Suhner 11N-50-7-5 / 133NE 37
8.12 Pilot plug Connector 80511, AMP 206486-1 and -2 37
8.13 24VDC Power Connector 81509, AMP C091AT3261001 38
9 GLOSSARY 39
10 Tron UAIS Installation form 44
10.1 Tron UAIS Class 'A' Installation 44
10.2 Heading Sensor, source 45
10.3 Speed Sensor, source 46
10.4 ARPA / ATA RADAR(s) 46
10.5 Position Sensor, source 47
10.6 Registration form 48

1 SYSTEM CONFIGURATION

2 AIS in an Operational Environment

This illustration shows a typical AIS system where equipped ships, vessels and shore based systems are automatically communicating with each other.

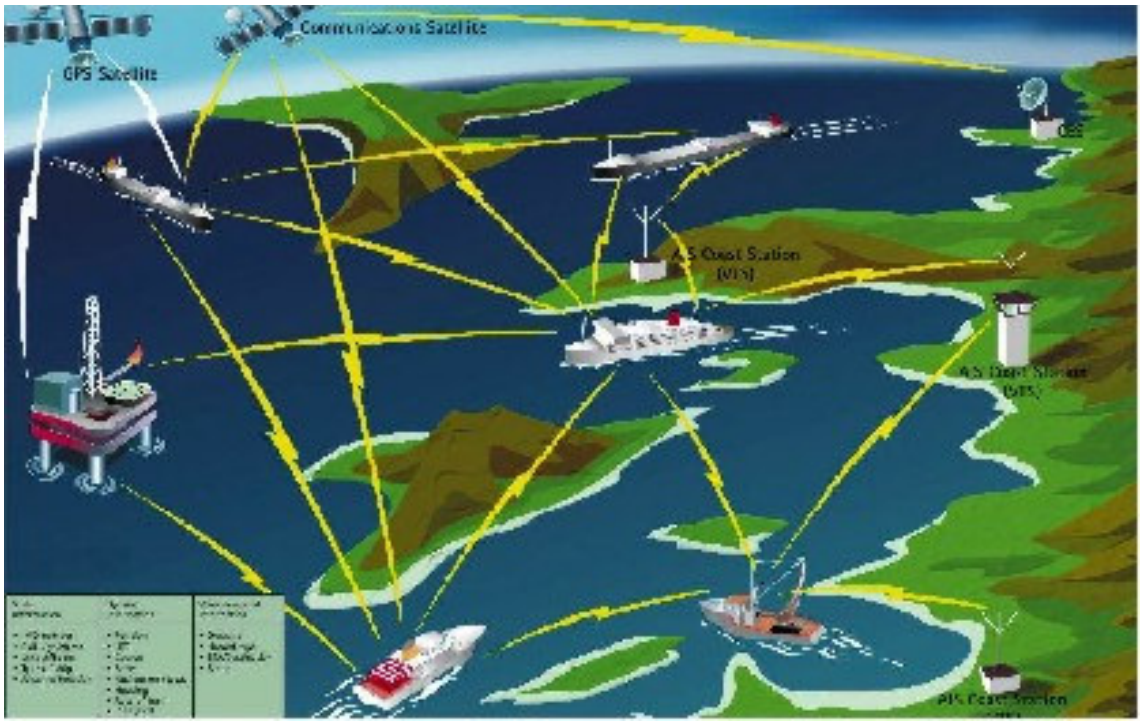

2.1 Tron UAIS TR-2500

3 EQUIPMENT LIST

3.1 Standard supply 80400

No.	Name	Type	Stock No.	Qty.	Remarks
1	Transponder unit	TR-2500	80401	1	
2	Standard Bracket Kit	For Desktop or Roof mounting of TR-2500	81540	1	
3	Junction Box		80560	1	
4	**Plug Kit consisting of:**		**81533**		
-	AIS Distribution Cable	10m with 37 pin D-sub	80579	1	
-	TNC connector	TNC for RG-58	80578	1	
-	BNC connector	BNC for RG-214	80577	1	
-	Power connector	For 24VDC	81509	1	
-	Pilot Port Connector including cover		81541	1	
-	9 pin D-sub cover		80593	2	
-	15 pin D-sub cover		80594	1	
5	AIS Viewer	Windows software	81650	1	

3.2 Optional supply

No.	Name	Type	Stock No.	Remarks
1	GPS/VHF combined antenna	Procom AIS 2/GPS	80748	
2	Plug Kit for 80748		81535	
3	Signal splitter to 80748	Procom	81649	
4	VHF antenna	Procom CXL 2-1 LW/1	92598	
5	Plug Kit for 92598		81534	
6	GPS antenna with mounting bracket	Procom GPS4 with FLG bracket	80611	
7	Plug Kit for 80611		81534	
8	GPS/VHF combined antenna	Comrod AC17-AIS	80747	
9	Plug Kit for 80747		81536	
10	VHF antenna with mounting bracket	Transvoice type 206-147 with 200-240 bracket	80617	
11	Plug Kit for 80617		80597	
12	GPS antenna with mounting bracket	Transvoice type 202-968 with 200-456/200-233 bracket	80618	
13	Plug Kit for 80618		81534	
14	Flush Mounting Kit		80586	
15	19`` Rack Tray Mounting Kit		80587	

4 MOUNTING

4.1 Antenna Unit

4.1.1 GPS antenna location

Install the GPS antenna unit referring to the drawing Figure 1, page 8. When selecting a mounting location for the antenna, keep in mind the following points.
1. Select a location out of the radar beam. The radar beam will obstruct or prevent reception of the GPS satellite signal.
2. There should be no interfering object within the line-of-sight to the satellites. Objects within line-of-sight to a satellite, for example a mast, may block reception or prolong acquisition time.
3. Mount the antenna unit as high as possible to keep it free of interfering objects and water spray, which can interrupt reception of GPS satellite signal it the water freezes.

4.1.2 VHF antenna location

Location of the mandatory AIS VHF-antenna should be carefully considered. Digital communication is more sensitive than analogue/voice communication to interference created by reflections in obstructions like masts and booms. It may be necessary to relocate the VHF radiotelephone antenna to minimize interference effects.
Install the VHF whip antenna referring to drawing Figure 1, page 8. Separate this antenna from other VHF radiotelephone antennas to prevent interference to the TR-2500.

To minimise interference effects, the following guidelines apply:

1. The AIS VHF antenna should be placed in an elevated position that is as free as possible with a minimum of 0.5 meters in the horizontal direction from constructions made of conductive materials. The antenna should not be installed close to any large vertical obstruction. The objective for the AIS VHF antenna is to see the horizon freely through 360 degrees.

2. The AIS VHF antenna should be installed safely away from interfering high-power energy sources like radar and other transmitting radio antennas, preferably at least 3 meters away from and out of the transmitting beam.

3. There should not be more than one antenna on the same plane. The AIS VHF antenna should be mounted directly above or below the ship's primary VHF radiotelephone antenna, with no horizontal separation and with a minimum of 2.8 meters vertical separation. If it is located on the same plane as other antennas, the distance apart should be at least 10 meters.

4.1.3 GPS/VHF combined antenna

See section 4.1.1 and 4.1.2. Select a location out of the radar beam. The radar beam will obstruct or prevent reception of the GPS satellite signal.

There should be no interfering object within the line-of-sight to the satellites. Objects within line-of-sight to a satellite, for example, a mast, may block reception or prolong acquisition time.

Mount the antenna unit as high as possible. Mounting it this way keeps it free of interfering objects and water spray, which can interrupt reception of GPS satellite signal if the water freezes.

Figure 1

Horizontal separation distance:

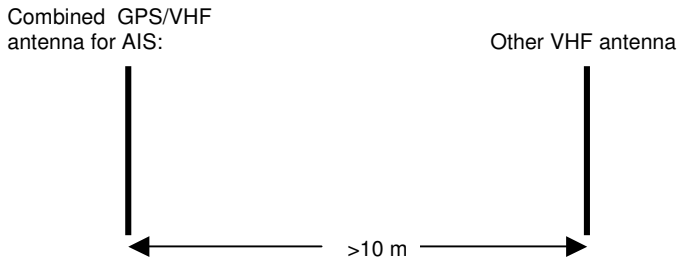

Vertical separation distance and distance from mast or other object of metal:

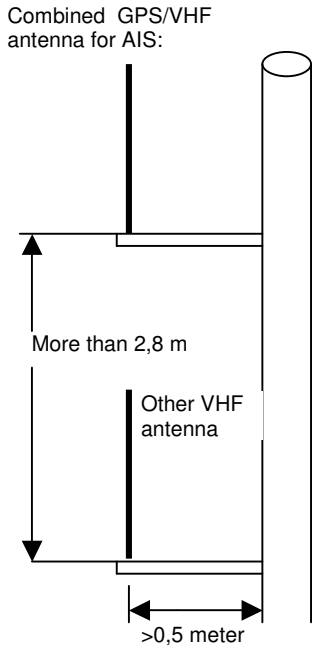

4.2 Cabling

The cable should be kept as short as possible to minimize signal attenuation.

The table below gives recommendations on cables that can be used for the GPS antenna connections:

Type	Attenuation @1.5 GHz (dB/100m)	Remark
RG58	90	Default for use if length< 20 m and antenna = Procom GPS4
RG214	35	If combined GPS/VHF antenna from either Procom or Comrod is used, this or better can be used
RG225	30	Cable with lower loss

For optimum performance of the transponder approximately +10dB gain should be available when the cable attenuation has been subtracted from the GPS antenna preamplifier gain. Note that Procom AIS2/GPS and Comrod AC17-AIS are combined VHF/GPS antennas and additional attenuation from connectors/ diplexer must be taken in consideration.Some examples below:

Cable Type	Antenna	Preamplifier Gain (dB/100m)	Recommented cable length (m)
RG58	Procom GPS4	30	<20 meter
RG214	Procom AIS2/GPS	28	10-30 meter
	Comrod AC17-AIS	20	10-20 meter
RG225	Procom AIS2/GPS	28	10-40 meter
	Comrod AC17-AIS	20	10-30 meter

The table below is gives you the attenuation on the VHF frequencies with different cable types:

Cable Type	Attenuation @150 MHz (dB/100m)	Diameter (mm)	Weight (kg/100m)
RG214	7	10,8	18,5
RG225	8	10,9	23,3

Example : A RG 214 cable with length of 40 meters will have an attenuation of 2,8 dB.

Please keep the cables as short as possible, and be aware that 3 dB loss means only half the output power. If you have a transmitter delivering 12,5 W, and you have 3 dB loss in the cable, only 6,25 Watts will be at the antenna.

4.2.1 Cable installation

All outdoor installed connectors on coaxial cables should be fitted with preventive isolation such as vulcanizing tape to protect against water penetration into the antenna cable.

Coaxial cables should be installed in separate signal cable channels/tubes and at least 10 cm away from power supply cables. Crossing of cables should be done at right angles (90°). The minimum bend radius of the coaxial cable should be 5 times the cable's outer diameter.

4.3 Transponder unit

The transponder unit can be installed as desktop mounted, roof mounted, flush mounted in a panel or mounted in a 19`` rack. Install it on the chart table or near the steering place. When selecting a mounting location for the transponder the following guidelines apply:

1. Keep the transponder out of direct sunlight.
2. The temperature and humidity should be moderate and stable.
3. Locate the unit away from exhaust pipes and vents.
4. The mounting location should be well ventilated.
5. Mount the unit where shock and vibration are minimal.
6. Keep the unit away from electromagnetic field generating equipment such as motor and generator.
7. Leave sufficient space at the sides and rear of the unit for maintenance and repair. Do also leave slack in cables for same reason.
8. A magnetic compass will be affected if the unit is placed too close to it. Observe the following compass safe distance to prevent disturbance to the compass:
   Standard Compass: 1.0 meters
   Magnetic Compass: 0.4 meters

4.3.1 Desktop Mounting

Use the standard Mounting Kit. For mounting hole measurements see Figure 2, page 12.

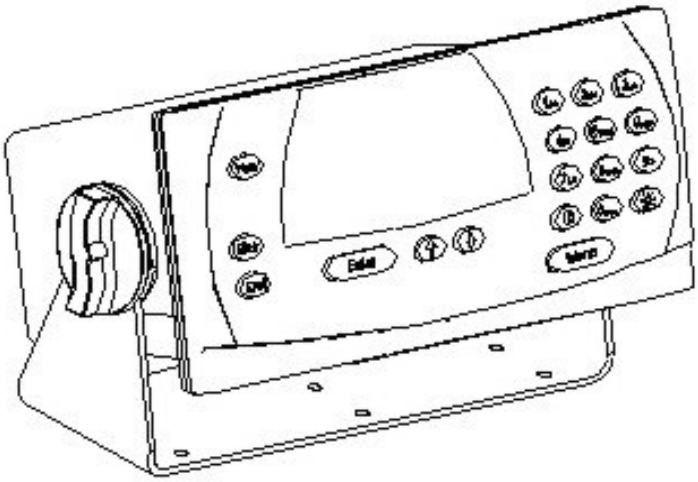

4.3.2 Roof Mounting

Use the standard Mounting Kit for desktop mounting.
The bracket plates 1 and 2 must be switched over to opposite side and the bracket is turned 180 degrees in order to get the bracket in place for roof mounting.
For mounting hole measurements see Figure 2, page12.

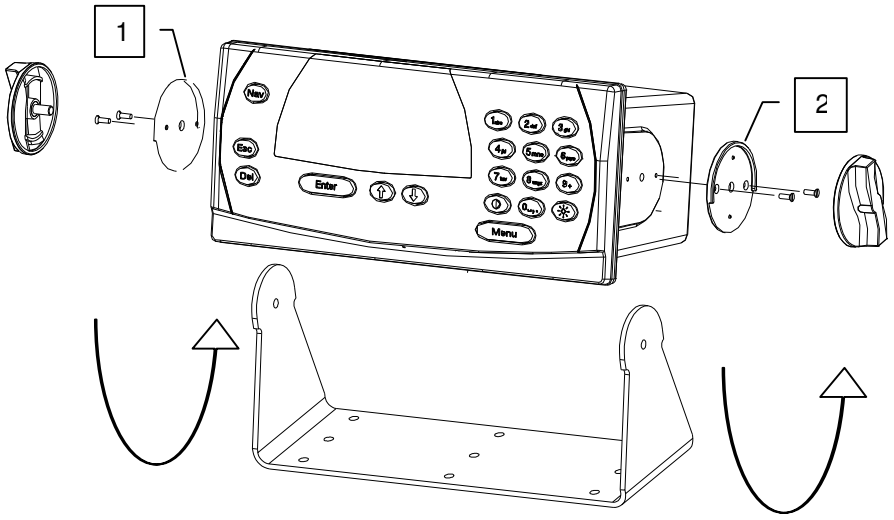

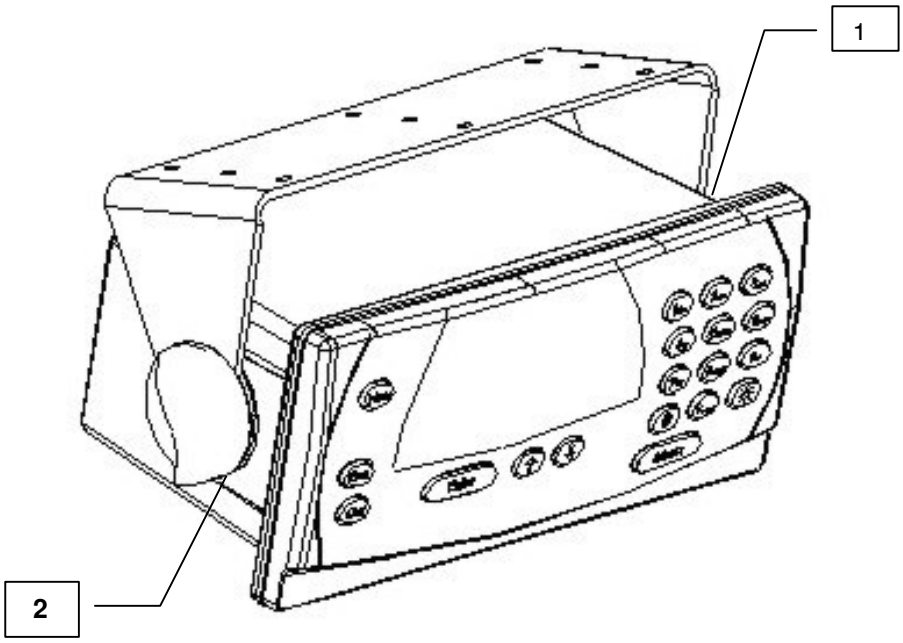

Figure 2

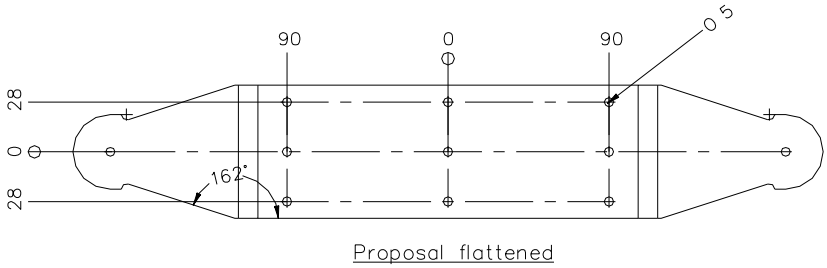

4.3.3 Flush Mounting

Use the Flush Mounting Kit 80586. For mounting hole measurements see Figure 3

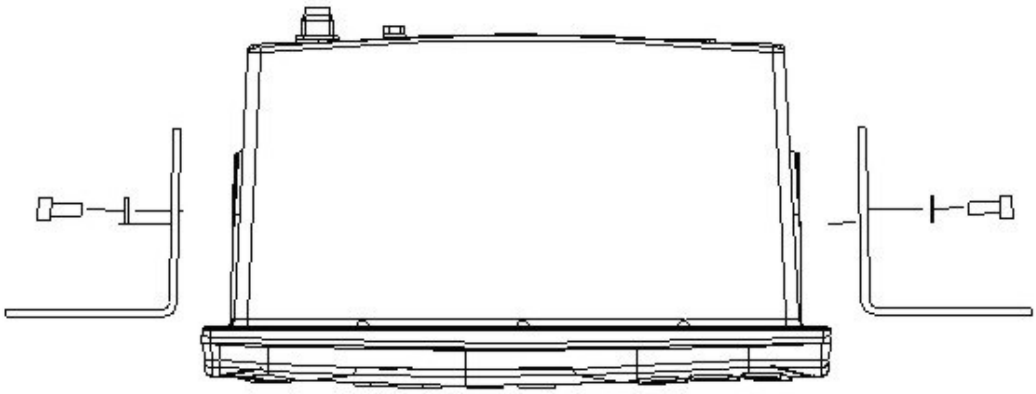

Figure 3

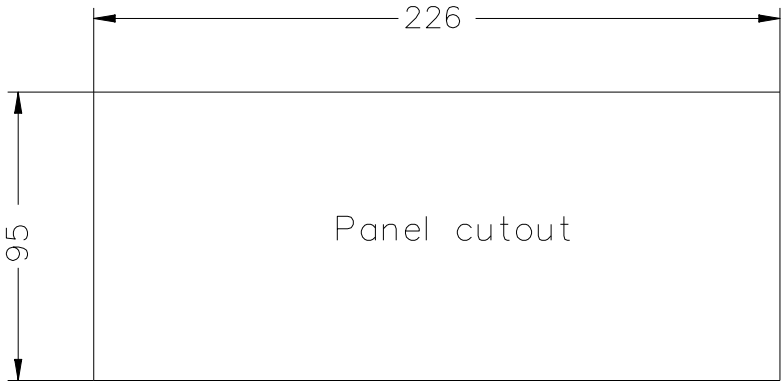

4.3.4 19``Rack Tray Mounting

Use the 19`` Rack Tray Mounting Kit 80587. For mounting see Figure 4

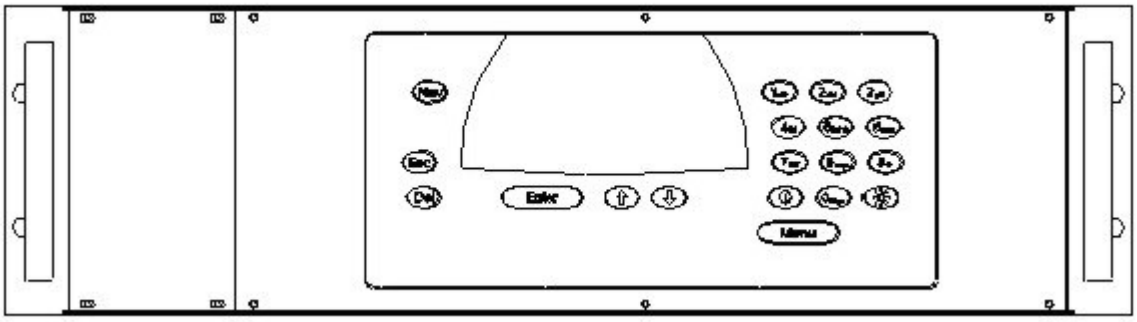

Figure 4

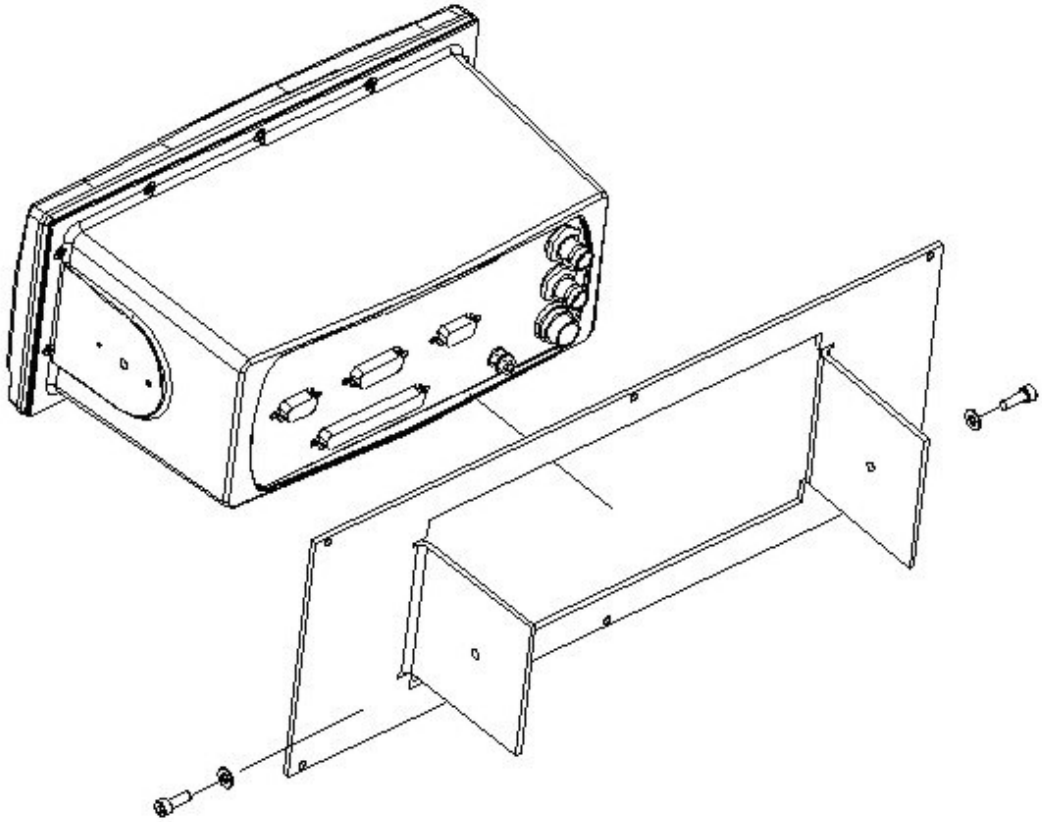

4.4 Junction Box

Mount the junction box where it is protected from rain and water splash.
For mounting hole measurements see Figure 5

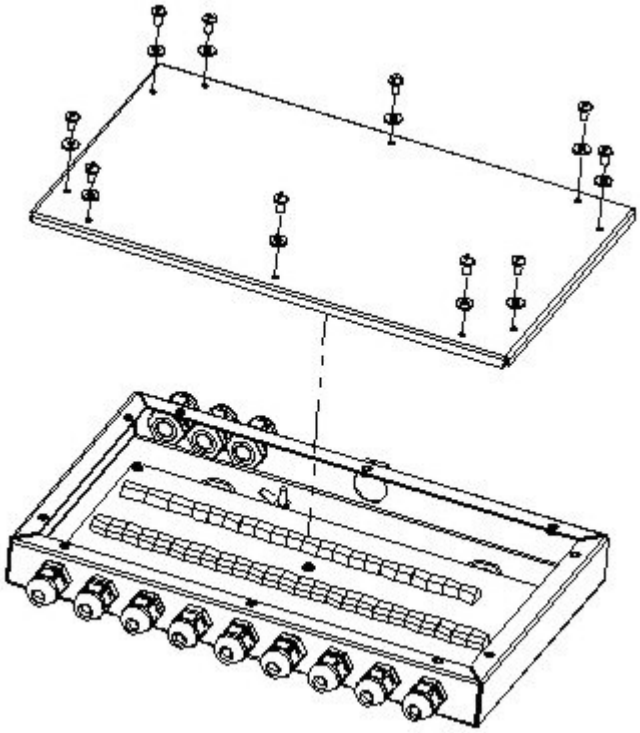

Figure 5

Use the four 5mm mounting holes

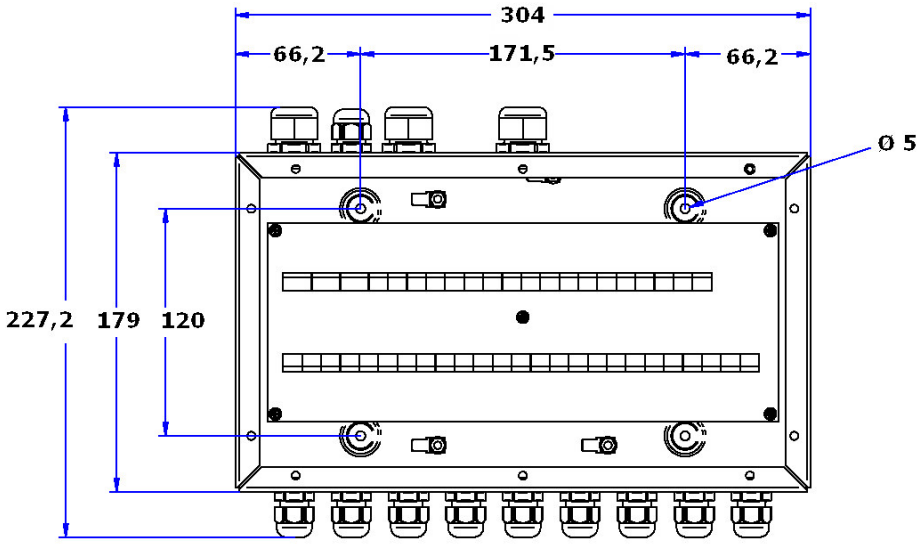

4.5 Connection cable between Transponder and Junction Box

The cable is connected to a 37-pin D-sub male connector and is delivered in 10m length.
For description see figure 6 and section 6 interconnection diagram.

Figure 6

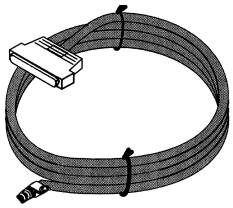

5 WIRING

5.1 System block diagram

Connect the equipment, referring to the interconnection diagram in section 6.

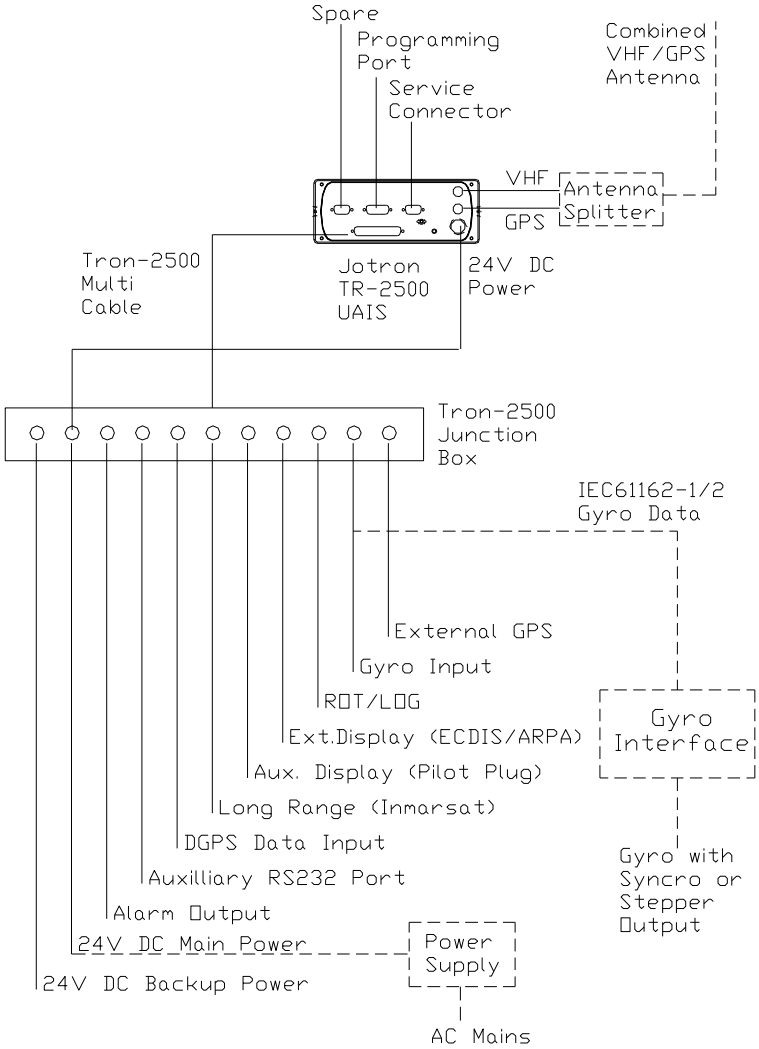

Dotted lines in the figure above, means options

5.2 *Input / Output signals*

5.2.1 Connections to Junction Box

There are three input ports for sensor 1, 2 and 3 which are based on the IEC 61162-1/2.
The protocol is RS-422. Data transmission rate is selectable between 4,8Kb/s and 38,4Kb/s.

Junction Box connections 1 - 24

Junction Box Inputs/Outputs	Functions
1	
2	
3	Isolated GND
4	AIS port 1 (B) Sensor 1
5	AIS port 1 (A) IEC61162-1/2
6	Isolated GND
7	
8	
9	Isolated GND
10	AIS port 2 (B) Sensor 2
11	AIS port 2 (A) IEC61162-1/2
12	Isolated GND
13	
14	
15	Isolated GND
16	AIS port 3 (B) Sensor 3
17	AIS port 3 (A) IEC61162-1/2
18	Isolated GND
19	AIS port 4 (B) External Display
20	AIS port 4 (A) IEC61162-1/2
21	Isolated GND
22	AIS port 4 (B)
23	AIS port 4 (A)
24	Isolated GND

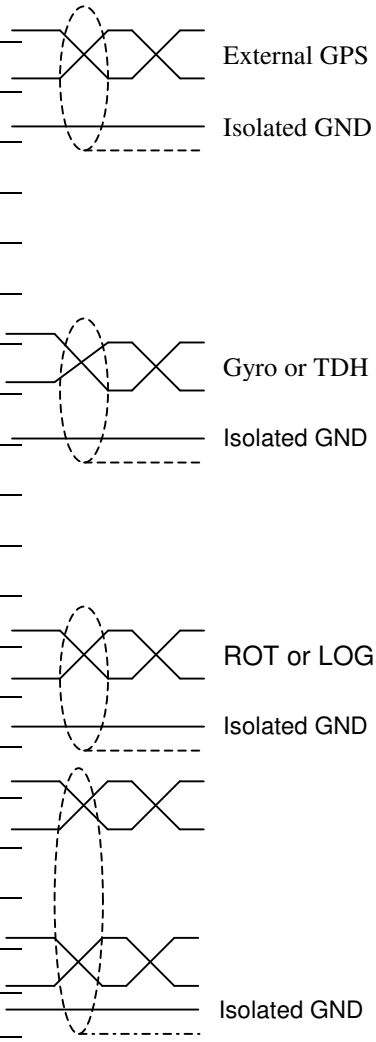

Junction Box connections 25 - 50

Junction Box Inputs/Outputs	Functions
25	AIS port 5 (B) Aux Displ/Pilot
26	AIS port 5 (A) IEC61162-1/2
27	Isolated GND
28	AIS port 5 (B)
29	AIS port 5 (A)
30	Isolated GND
31	AIS port 6 (B) Long Range
32	AIS port 6 (A) IEC61162-1/2
33	Isolated GND
34	AIS port 6 (B)
35	AIS port 6 (A)
36	Isolated GND
37	
38	
39	Isolated GND
40	AIS port 7 (B) DGPS data
41	AIS port 7 (A) ITU-R M.823-2
42	Isolated GND
43	
44	
45	Signal GND
46	Dry relay contact, Referred to pin 48
47	Dry relay contact, Referred to pin 48
48	Dry relay contact, Referred to pin 46 & 47
49	Spare
50	GND

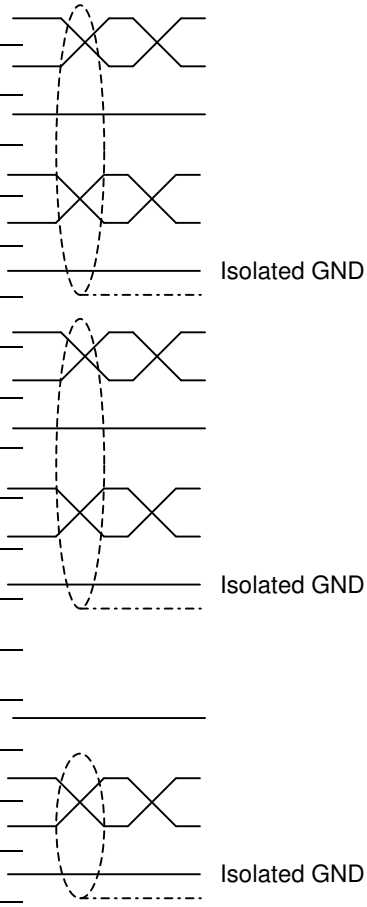

5.2.2 Pilot Plug Connector

This is a 9 pin plug to be installed on the bridge near the pilots operating position so that the pilot can connect a Personal Pilot Unit (PPU). For further information see section 6.5 and 8.12.

5.2.3 External Display Connector

For connection of external display, see section 5.2.1 and section 6.

5.3 Tron UAIS TR-2500 Rear Connections

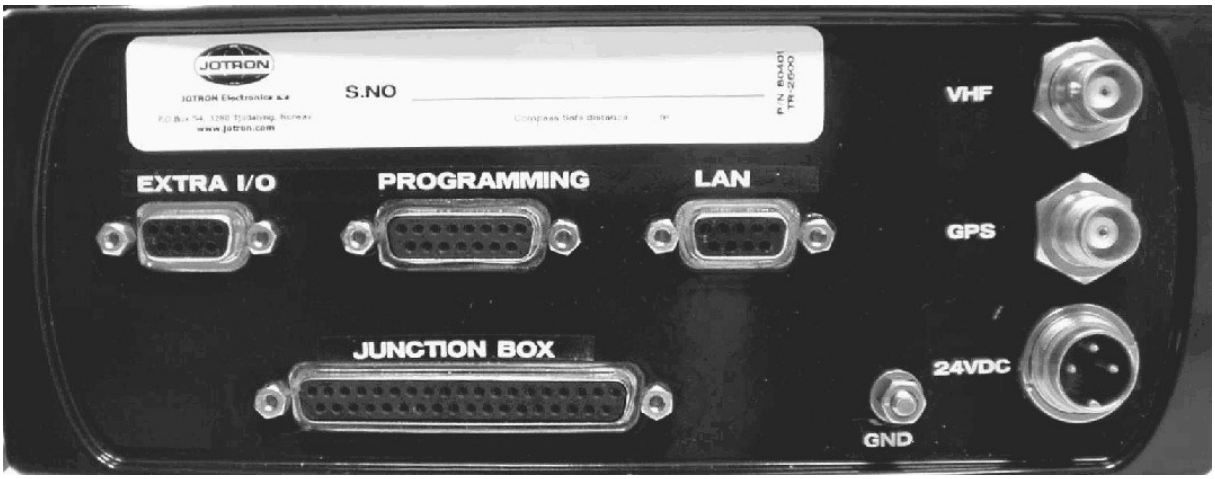

5.3.1 VHF Antenna Connector

This is a BNC type antenna connector to be connected directly to an external VHF antenna or antenna splitter to receive and transmit VHF frequencies.
For further information see section 8.9.

5.3.2 GPS Antenna Connector

This is a TNC type antenna connector to be connected directly to an external GPS antenna or antenna splitter to receive GPS information.
For further information see section 8.10.

5.3.3 24VDC Connector

This is a connector to connect 24VDV power to the transponder.
For further information see section 6.7 and 8.13.

5.3.4 Ground Tag (GND)

This Ground Tag is to be connected directly to the ships metal.

5.3.5 Extra I/O Connector

This 9 pin D-sub connector is described in section 6.4.

5.3.6 Programming Connector

This 15 pin D-sub connector is for programming of the Transponder by Program Engineers only, and is described in the Tron UAIS TR-2500 Technical Manual.

5.3.7 Junction Box Connector

This 37 pin D-sub female connector gives connections between the transponder and the Junction Box, And is described in section 6.2.

5.3.8 LAN Connector

This 9 pin D-sub connector is described in section 6.3.

6 INTERCONNECTION DIAGRAM

37 Pin D-sub TR-2500	Connection Cable Wire Colours	Junction Box Terminal Block	Junction Box Inputs/Outputs	Functions	Input / Output
1	white	1	1	AIS TD1-B	Reserved
2	brown	2	2	AIS TD1-A	Reserved
			3	Isolated GND	
3	green	3	4	AIS RD1-B (External GPS)	In
4	yellow	4	5	AIS RD1-A (External GPS)	In
			6	Isolated GND	
5	Grey	5	7	AIS TD2-B	Reserved
6	Pink	6	8	AIS TD2-A	Reserved
			9	Isolated GND	
7	Blue	7	10	AIS RD2-B (Gyro or TDH)	In
8	Red	8	11	AIS RD2-A (Gyro or TDH)	In
			12	Isolated GND	
9	black	9	13	AIS TD3-B	Reserved
10	violet	10	14	AIS TD3-A	Reserved
			15	Isolated GND	
11	grey/pink	11	16	AIS RD3-B	In
12	red/blue	12	17	AIS RD3-A	In
			18	Isolated GND	
13	white/green	13	19	AIS TD4-B (External Display)	Out
14	brown/green	14	20	AIS TD4-A (External Display)	Out
			21	Isolated GND	
15	white/yellow	15	22	AIS RD4-B	In
16	yellow/brown	16	23	AIS RD4-A	In
			24	Isolated GND	
17	white/grey	17	25	AIS TD5-B (Aux Displ/Pilot)	Out
18	grey/brown	18	26	AIS TD5-A (Aux Displ/Pilot)	Out
			27	Isolated GND	
19	white/pink	19	28	AIS RD5-B	In
20	pink/brown	20	29	AIS RD5-A	In
			30	Isolated GND	
21	white/blue	21	31	AIS TD6-B (Long Range)	Out
22	brown/blue	22	32	AIS TD6-A (Long Range)	Out
			33	Isolated GND	
23	white/red	23	34	AIS RD6-B	In
24	brown/red	24	35	AIS RD6-A	In
			36	Isolated GND	
25	White/black	25	37	AIS TD7-B	Reserved
26	brown/black	26	38	AIS TD7-A	Reserved
			39	Isolated GND	
27	Grey/green	27	40	AIS RD7-B (DGNSS data)	In
28	yellow/grey	28	41	AIS RD7-A (DGNSS data)	In
			42	Isolated GND	
29	Pink/green	29	43	RS-232 TX	Out
30	yellow/pink	30	44	RS-232 RX	In
31	green/blue	31	46	Dry relay contact, Referred to pin 48	Alarm Out (NC)
32	yellow/blue	32	47	Dry relay contact, Referred to pin 48	Alarm Out (NO)
33	green/red	33	48	Dry relay contact, Referred to #46 & 47	Common
34	yellow/red	34	49	I/O Spare	
35	green/black	35		Future warning for Backup Power	
36	Yellow/black	36	50	GND	

For definiton of signal state, see section 6.3.1

6.1 DC Power Input/output of Junction Box

Junction Box Terminal Block	Function	Input/Output
51	GND	
52	0VDC	In
53	+24VDC MAIN	In
54	GND	
55	0VDC FUSED	Out
56	+24VDC FUSED	Out
57	GND	
58	0VDC	In
59	+24VDC BACKUP	In

6.2 Description of 24VDC connection to transponder

24VDC Connector for cable, front side

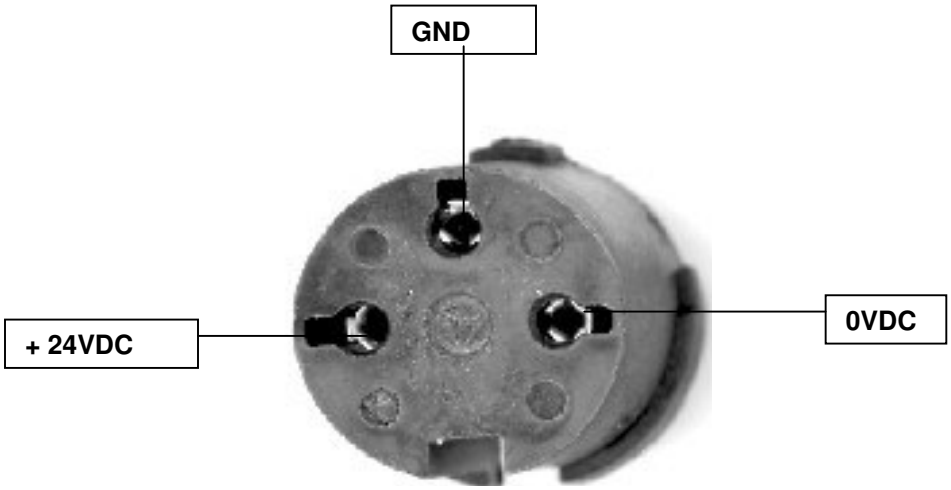

6.3 Description of Junction Box Connector at TR-2500

37 pins Female D-sub connector

Pin Nr.	Name	Function	In/Out
1		AIS TD1-B	Reserved
2		AIS TD1-A	Reserved
3	AIS 1 in (B)	AIS RD1-B (External GPS)	In
4	AIS 1 in (A)	AIS RD1-A (External GPS)	In
5		AIS TD2-B	Reserved
6		AIS TD2-A	Reserved
7	AIS 2 in (B)	AIS RD2-B (Gyro or TDH)	In
8	AIS 2 in (A)	AIS RD2-A (Gyro or TDH)	In
9		AIS TD3-B	Reserved
10		AIS TD3-A	Reserved
11	AIS 3 in (B)	AIS RD3-B	In
12	AIS 3 in (A)	AIS RD3-A	In
13	AIS 4 out (B)	AIS TD4-B (External Display)	Out
14	AIS 4 out (A)	AIS TD4-A (External Display)	Out
15	AIS 4 in (B)	AIS RD4-B	In
16	AIS 4 in (A)	AIS RD4-A	In
17	AIS 5 out (B)	AIS TD5-B (Aux Displ/Pilot)	Out
18	AIS 5 out (A)	AIS TD5-A (Aux Displ/Pilot)	Out
19	AIS 5 in (B)	AIS RD5-B	In
20	AIS 5 in (A)	AIS RD5-A	In
21	AIS 6 out (B)	AIS TD6-B (Long Range)	Out
22	AIS 6 out (A)	AIS TD6-A (Long Range)	Out
23	AIS 6 in (B)	AIS RD6-B	In
24	AIS 6 in (A)	AIS RD6-A	In
25	AIS 7 out (B)	AIS TD7-B	Reserved
26	AIS 7 out (A)	AIS TD7-A	Reserved
27	AIS 7 in (B)	AIS RD7-B (DGNSS data)	In
28	AIS 7 in (A)	AIS RD7-A (DGNSS data)	In
29		RS-232 TX	Out
30		RS-232 RX	In
31		ALARM Out NC to #33	
32		ALARM Out NO to #33	
33		ALARM CO switch between #31 and #32	
34		I/O Spare	
35		Future warning for Backup Power	-
36	GND	Ground	-
	Cable screen	Chassis GND	-

6.3.1 Signal state definitions

Junction Box interfaces Port 1 to 7 are RS422 with A and B lines.
The idle, marking, logical 1, OFF or stop bit states are defined by a negative voltage on line A with respect to line B.
The active, spacing, logical 0, ON or start bit states are defined by a positive voltage on line A with respect to line B.
It should be noted that the above A with respect to B levels are inverted from the voltage input/output requirements of standard UARTs and that many line drivers and receivers provide a logic inversion.

6.4 Description of Pilot Plug connection to Junction Box

PIN NO.:	Name:	Connected to Junction Box at:	In/Out
1	Pilot Plug	AIS port 25	TDA Out
4	Pilot Plug	AIS port 26	TDB Out
5	Pilot Plug	AIS port 28	RDA In
6	Pilot Plug	AIS port 29	RDB in
9	Pilot Plug	AIS port 30	Floating Ground

7 FIRST START UP

7.1 Description of buttons

Nav	:	Shortcut to insert navigational data.
Menu	:	Show main menu.
Enter	:	Accept current setting. Takes you one menu level forward. Enter sub-menu
Esc	:	Escape from current menu without saving. Takes you one menu level back.
Del	:	Delete character at cursor.
↑↓	:	Scrolling menus.
◑	:	Display contrast.
☼	:	Light intensity in display and keyboard buttons.
0-9	:	Digits 0-9. Press with short time interval to convert it to alpha character.

7.2 Connecting power

After connecting the antennas and Inputs/Outputs, the DC power can be connected to the TR-2500 from the junction box. The input voltage must be within 24VDC +30% / -10%. The power consumption is 60W. At start, the TR-2500 will look for connected sensors and equipment for 20 –30 seconds. The display will show:

Loading …
Please wait

After a while the alarm status will be indicated.

1. Press [Del] key to reset the alarm settings.
2. Press [Menu] key to enter “Main menu”.

Showing the number of sub-menus available below the selected menu

Main Menu 8/8
1 Nav. Status
2 Voyage
3 Current Sensors
4 Internal GPS
5 Messages
6 Channel Management
7 Diagnostic
▶ 8 Config ◀

3. Select “8 Config” by [arrow down] key.
4. Press [Enter] key.

```
Menu: Config                1/7
  ▶ 1 Antenna Pos.            ◀
    2 Ship Data
    3 I/O Ports
    4 Long Range
    5 Buzzer
    6 Silent Mode
    7 Ch. Password
```

5. Select “1 Antenna Pos.” by [Enter] key

```
Menu:GPS Antenna  Po        1/2
  ▶ 1   Internal GPS          ◀
    2  External GPS
```

6. Press [Enter] key to select “1 Internal Antenna”.

```
Menu: Internal Ant.         1/4
  ▶     Pos A:  0             ◀
        Pos B:  0
        Pos C:  0
        Pos D:  0
```

7. Press [Enter] key to continue.
8. Enter Password 2 * and press [Enter] key.
9. Fill in the different ranges according to Figure 7, page 26.

* Password 2 is: SE

Figure 7

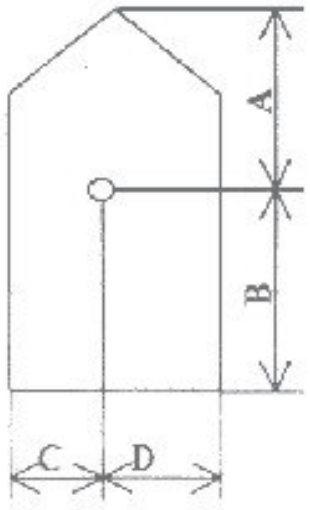

A: Distance from bow to GPS antenna position (000 m)

B: Distance from stern to GPS antenna position (000 m)

C: Distance from port to GPS antenna position (00 m)

D: Distance from starboard to GPS antenna position (00 m)

10 Press [Enter] key and type in the value for A. Then press [Enter] key again.
11 Select next Pos with [arrow down] key.
12 Repeat the procedure for the B, C and D positions.
13 Press [Esc] key to return to “GPS Antenna Po” menu.
14 Select “External GPS” with [arrow down] key and press [Enter] key.
15 Repeat the procedure described in item 9 to 12.
16 Press [Esc] key to return to “Main menu”.

```
Main Menu                    8/8
   1  Nav. Status
   2  Voyage
   3 Current Sensors
   4 Internal GPS
   5 Messages
   6 Channel Management
   7 Diagnostic
▶  8 Config                    ◀
```

17 Select “2 Voyage” by pressing [arrow up] key

```
Main Menu                    2/8
      1 Nav. Status
▶     2  Voyage                ◀
      3 Current Sensors
      4 Internal GPS
      5 Messages
      6 Channel Management
      7 Diagnostic
     8 Config
```

18 Press [Enter] key.

```
Menu: Voyage                    1/5
  ▶ Dest:                         ◀
    ETA:
    Persons aboard:
    Type of ship:
    Draught: 00.0 m
```

19 Select “Type of ship” by pressing [arrow down] key and [Enter] key.
20 Enter Pass Word 1 end press [Enter] key.

```
Type of ship:
0_
 Range: 0 to 255
```

21 Type in the correct code for type of ship according to Figure 8, page 29, then press [Enter] key.
22 Select Draught by pressing [arrow down] key and press [Enter] key.

```
Draught:
00.0
```

23 Press [Esc] two times to go to operational display.
This concludes the initial installation.

See Operators Handbook for more information about this subject.

Figure 8

Table A: Identifiers Used by ships to Report Their Type	
First Digit	**Second Digit**
0 – Not used	0 – All ships of this type
1 – Reserved for future use	1 – Carrying DG, HS, or MP IMO hazard or pollutant category A
2 – WIG (Wing In Ground)	2 – Carrying DG, HS, or MP IMO hazard or pollutant category B
3 – see table A below	3 – Carrying DG, HS, or MP IMO hazard or pollutant category C
4 – HSC (High Speed Craft)	4 – Carrying DG, HS, or MP IMO hazard or pollutant category D
5 – see table B below	5 – Reserved for future use
6 – Passenger Ships	6 – Reserved for future use
7 – Cargo Ships	7 – Reserved for future use
8 – Tankers	8 – Reserved for future use
9 – Other types of Ship	9 – No additional information

Identifier Number		Table B: Identifiers Used by Other Ships to Report Their Type
First Digit	**Second Digit**	
3	0	Fishing
3	1	Towing
3	2	Towing and length of the tow exceeds 200mtrs (650ft) or breadth exceeds 25 mtrs (80ft)
3	3	Engaged in dredging or underwater operations
3	4	Engaged in diving operations
3	5	Engaged in military operations
3	6	Sailing
3	7	Pleasure craft
3	8	Reserved for future use
3	9	Reserved for future use

Identifier Number		Table C: Identifiers Used by Special Craft to Report Their Type
First Digit	**Second Digit**	
5	0	Pilot vessel
5	1	Search and rescue vessel
5	2	Tugs
5	3	Port tenders
5	4	Vessels with anti-pollution facilities or equipment
5	5	Law enforcement vessels
5	6	Spare – for assignments to local vessels
5	7	Spare – for assignments to local vessels
5	8	Medical transports (as defined in the 1949 Geneva Conventions and Additional Protocols)
5	9	Ships according to Resolution No. 18 (Mob-83)

DG = Dangerous Goods HS = Hazardous Substances MP = Marine Pollutants

8 OUTLINE DRAWINGS

8.1 Transponder Jotron UAIS TR-2500

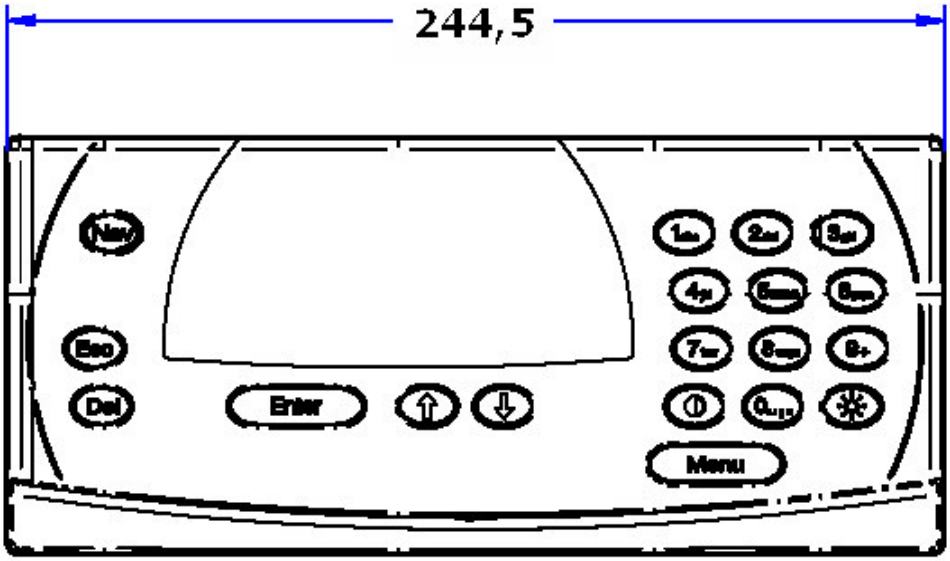

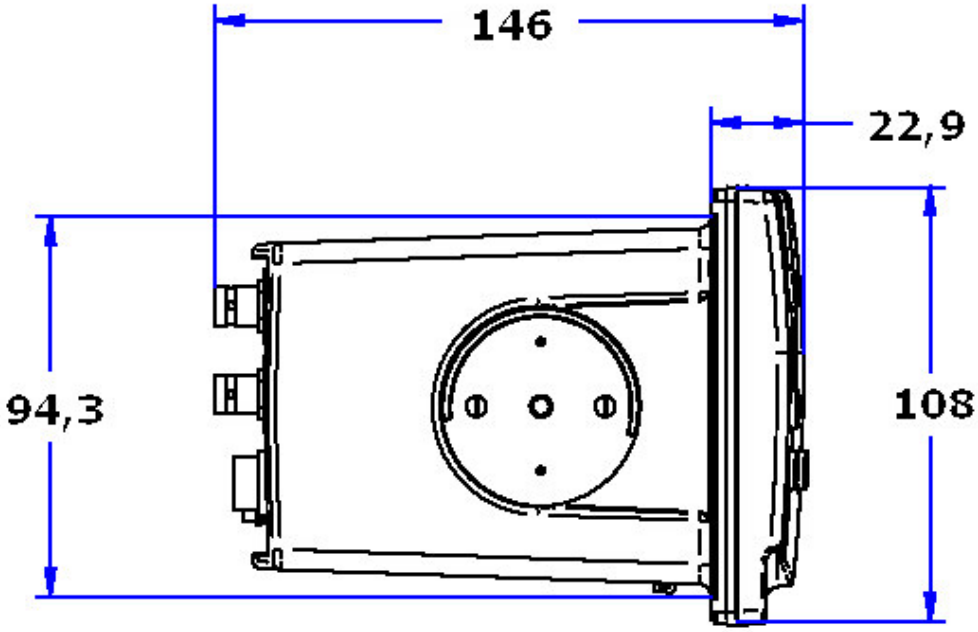

8.2 Junction Box

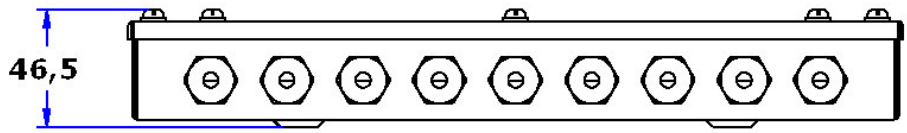

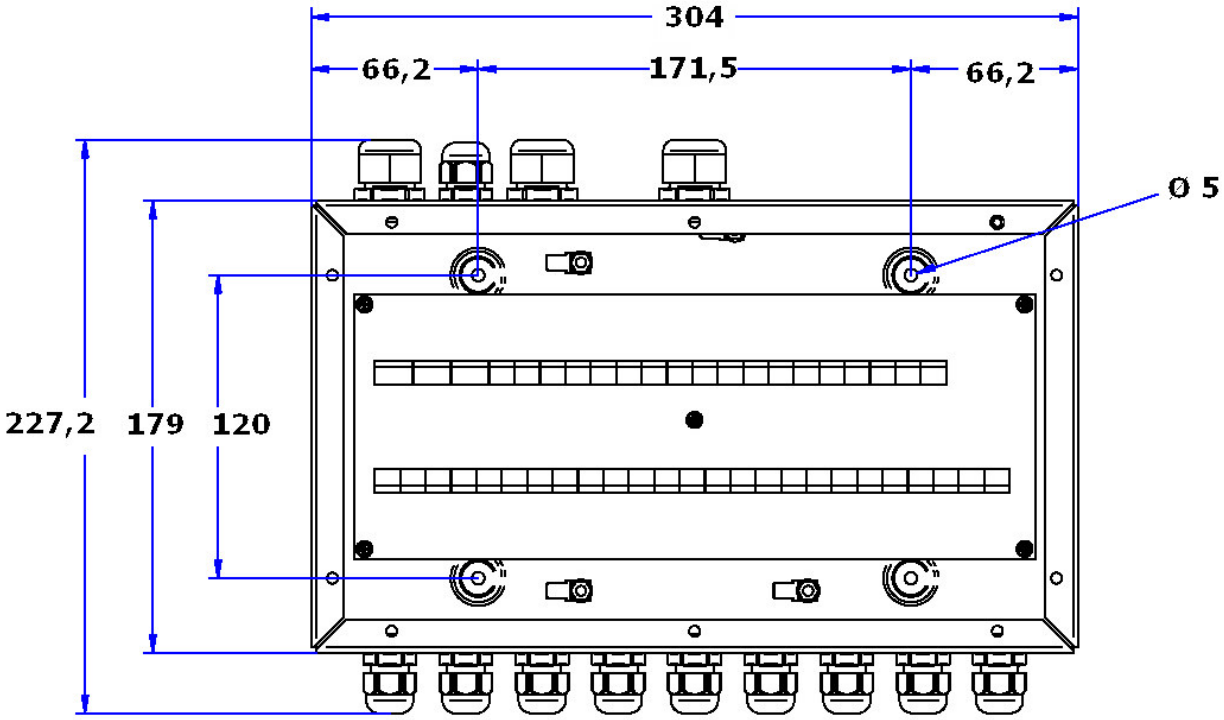

8.3 Comrod AC17-AIS Combined Marine VHF and GPS Antenna

AC17M4-AIS
13/06/02

Previous/Next

COMROD AC17M4-AIS

Combined Marine VHF and GPS Antenna

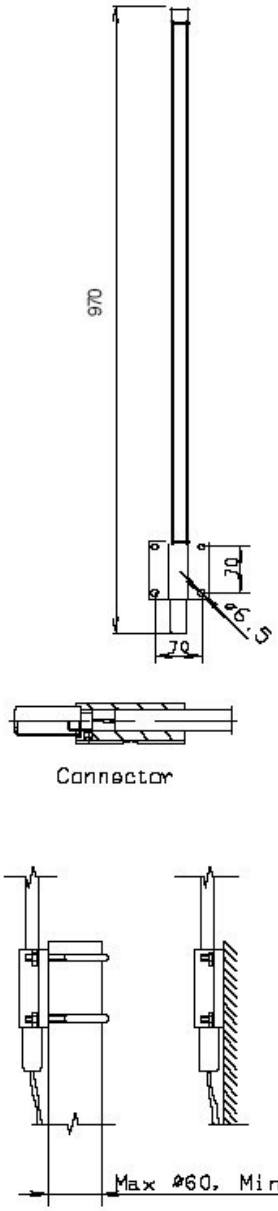

Application:

AC17M4-AIS is an antenna for Automatic Identification System transponders. The antenna includes an active GPS receiving antenna and a VHF dipole antenna. It is a high quality antenna with a durable construction and a beautiful finish for installation on all kind of vessels.
Also suitable for maritime VHF and navigational GPS when space is at premium.

A signal splitter (AIS/F) for separating VHF and GPS signals comes with the antenna. See system diagram on next page.

Electrical specifications:

Frequency range	VHF: 156-162 MHz, VSWR < 2 : 1 GPS: 1575.42MHz, L1
Nominal impedance	50 ohm
Power rating	VHF: 25 W
Gain	VHF: 1 dBi GPS: 20dB pre-amplifier
Polarization	VHF: Vertical GPS: RHCP
Power GPS	3 – 5V DC feed through the coax. cable,
Noise figure, GPS amp.	1.5dB maximum
Connector	N female

Mechanical specifications:

Design	VHF: Centerfed coaxial dipole. GPS: Active Quad helix Radiating elements completely enclosed in polyurethane foam within a fiberglass tube.
Height	0.97m
Weight	0.5 kg
Wind rating	55 m/s = 125 mph
Finish	Polyurethane lacquer, white
Temperature range	-40°C, +50°C; + -28 °F, +122°F

Mounting:

AC17M4-AIS is easily mounted to the bulkhead by means of 4 holes in the aluminum bracket, or to a mast or tube with U-bolts. The U-bolts in stainless steel, are included.

Suitable cable: RG58, RG213 or similar.

Comrod A/S, N-4124 Tau - Norway. Telephone (+47) 51740500. Telefax (+47) 51740501. E-mail: sales@comrod.

COMROD

8.4 Procom AIS 2/ GPS Dual band Antenna

CE

AIS 2/GPS

Dual Band Antenna for the AIS system

PROCOM

DESCRIPTION:

- ★ This active antenna has been designed for use by the Universal Shipborne Automatic Identification System (AIS) on all waterways.
- ★ The antenna consists of a high-performance glassfiber whip (based on CXL 2-1, the very wellknown antenna in the maritime sector), an active GPS-antenna, which is built into the antenna mount and a low-loss filter. Then only one downlead cable is necessary.
- ★ The whip is a 1/2 λ antenna for the maritime VHF frequency range 156-162.5 MHz.
- ★ The GPS-antenna has a full hemispherical coverage, and a built-in high gain, low noise amplifier.
- ★ The necessary supply voltage (5 V DC) for the amplifier is delivered through the downlead coaxial cable. Up to 30 m of RG 214/U coaxial cable can be used between the antenna and the receiver/transceiver.
- ★ The earthing wire (see drawing) ensures static discharging to ground, and thereby also prevents noise pick-up from the ship's installations running on the outside of the coaxial cable.
- ★ By careful choice of materials, the AIS 2/GPS is designed to withstand the roughest of climate conditions, ensuring many years of trouble-free service.

SPECIFICATIONS:

ELECTRICAL VHF	
MODEL	AIS 2/GPS
ANTENNA TYPE	1/2 λ whip (based on CXL 2-1)
FREQUENCY	156-162.5 MHz (maritime VHF)
IMPEDANCE	Nom. 50 Ω
POLARISATION	Vertical
GAIN	Approx. 2 dBi (0 dBd)
SWR	Typ. ≤ 1.5
MAX. POWER	25 watt
ELECTRICAL GPS	
ANTENNA TYPE	Active patch antenna
FREQUENCY	1575 MHz
IMPEDANCE	Nom. 50 Ω
POLARISATION	Circular right-hand
COVERAGE	Hemispherical
GAIN (in axial direction)	> 28 dBi
CROSS-POLARISATION ATT	> 10 dB (typ.)
Built-in Amplifier	
GAIN	> 30 dB (typ.)
NOISE FIGURE	< 1 dB (typ.)
P_{1dB}	Approx. +7 dBm
SWR (output)	≤ 2.0
SUPPLY VOLTAGE	5±0.5 VDC (3 V type on request)
SELECTIVITY	> 45 dB down at ± 45 MHz
CURRENT CONSUMPTION	Approx. 25 mA
MECHANICAL (for the AIS 2/GPS)	
TEMP. RANGE	-30° C → + 60° C
CONNECTOR	N-female
WIND SURFACE	Approx. 0.031 m²
WIND LOAD	Approx. 36 N (at 150 km/h)
COLOUR	White
HEIGHT	Approx. 1350 mm
WEIGHT	Approx. 700 g
MOUNTING	On 30-44 mm mast tube using stainless steel clamp, type "SM-MAS" (included)

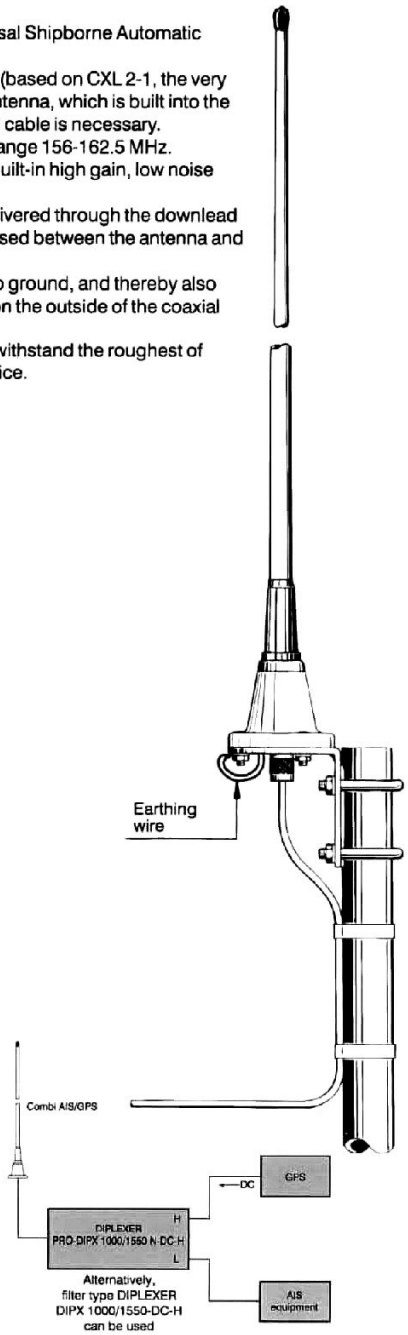

10.2003

PROCOM A/S reserve the right to amend specifications without prior notice.