JOTRON electronics a.s.

# Tron TR20 GMDSS
# Tron TR20 PLUS
## Technical Handbook

**Januar 2003**

## AMENDMENT RECORD

| AMDT | INCORP. BY | DATE | PAGE(S) |
|---|---|---|---|
| 1 | BA | 15.10.01 EM3681 | BOM/KP/E-99936 |
| 2 | BA | 23.10.01 EM3688 | BOM/KP/E-99936 |
| 3 | AF | 08.11.01 EM3699 | BOM-99936 |
| 4 | AF | 14.11.01 EM3727 | BOM/KP/E-99940 |
| 5 | BA | 14.11.01 EM3728 | BOM/KP/E-99936 |
| 6 | BA | 14.12.01 | 2-1,5-2, 7-1, 8-1 |
| 7 | AF | 07.01.02 EM3762 | BOM-99940 |
| 8 | BA | 10,01.02 EM3764 | BOM/E-99936 |
| 9 | BA | 04.02.02 | 7-1 Draw updated, Appendix A added |
| 10 | FIT | 20.02.02 EM3804 | BOM-99940 |
| 11 | BA | 22.02.02 EM3805 | E/KP/BOM-99940 |
| 12 | FIT | 26.02.02 EM3806 | New SW u.gr. |
| 13 | BA | 05.03.02 EM3810 | KP-99936 |
| 14 | BA | 10.04.02 EM3824 | KP-99940 |
| 15 | AF | 10.04.02 EM3825 | KP-99936 |
| 16 | BA | 11.04.02 EM3828 | KP-99940 |
| 17 | AF | 25.07.02 EM3860 | KP/BOM-99936 |
| 18 | TOW | 23.09.02 EM3879 | BOM-99930 |
| 19 | PA | 10.10.02 EM3890 | E/BOM-99940 |
| 20 | PA | 28.10.02 EM3897 | BOM-99940 |

| AMDT | INCORP. BY | DATE | PAGE(S) |
|---|---|---|---|
| 21 | FIT | 04.02.03 EM3942 | BOM/E-99940 |
| 22 | PA | 10.03.03 EM3948 | BOM/E-99940 |
| 23 | PA | 10.03.03 EM3953 | BOM/E-99940 |
| 24 | PA | 10.03.03 EM3954 | BOM/E-99936 |
| 25 | | | |
| 26 | | | |
| 27 | | | |
| 28 | | | |
| 29 | | | |
| 30 | | | |
| 31 | | | |
| 32 | | | |
| 33 | | | |
| 34 | | | |
| 35 | | | |
| 36 | | | |
| 37 | | | |
| 38 | | | |
| 39 | | | |
| 40 | | | |

The information in this book has been carefully checked and is believed to be accurate. However, no responsibility is assumed for inaccuracies.

**CAUTION!**
This equipment contains CMOS integrated circuits. Observe handling precautions to avoid static discharges which may damage these devices.

JOTRON electronics a.s reserves the right to make changes without further notice to any products or modules described herein to improve reliability, function or design. JOTRON electronic a.s does not assume any liability arising out of the application or use of the described product.

## CONTENTS

---


**1. SYSTEM DESCRIPTION ..... 1-5**
General information ..... 1-5
**2. TECHNICAL SPECIFICATION ..... 2-1**
**3. FUNCTIONAL DESCRIPTION ..... 3-1**
Precautions and Warnings ..... 3-1
Batteries ..... 3-1
Connectors and cables ..... 3-1
Display and front panel ..... 3-1
Storage and safe handling ..... 3-1
**4. OPERATING INSTRUCTIONS ..... 4-1**
Controls ..... 4-1
Auxiliary connector ..... 4-1
**5. TECHNICAL DESCRIPTION ..... 5-1**
Introduction ..... 5-1
Main board (99940) ..... 5-1
Audio Frequency section ..... 5-1
Receiver Audio circuits ..... 5-2
Control Circuits ..... 5-2
Power supply Circuits ..... 5-2
Synth / IF board (99936a). ..... 5-2
Synthesiser ..... 5-2
IF circuit ..... 5-3
RF board (99936b) ..... 5-3
Receiver front end ..... 5-3
Transmitter section ..... 5-3
**6. MAINTENANCE ..... 6-1**
Tuning of LO frequency ..... 6-1
Other adjustments ..... 6-1
**7. DIAGRAMS ..... 7-1**
**8. PARTS LISTS ..... 8-1**

# 1. SYSTEM DESCRIPTION

## *General information*

The JOTRON Tron TR20 is a VHF radiotelephone designed to operate in the maritime VHF band. It comes in two versions, Tron TR20 GMDSS and Tron TR20 PLUS.

Tron TR20 GMDSS is specially designed for GMDSS applications and fulfills the ETS 300 225 spesification and is waterproof to IP67. The housing is made of glass-reinforced polycarbonate in a highly visible orange colour.

The Tron TR20 PLUS is designed for commercial and leisure use and fulfils the EN 301 178 standard. This version is equipped with connectors for use of external headset and/or microphone. IP rating on this version is IP54. The housing is made in the same material as the Tron TR20 GMDSS, but the colour is grey as opposed to the orange GMDSS version

# 2. TECHNICAL SPECIFICATION

## General

| | |
|---|---|
| Frequency range: | 156 – 163 MHz |
| Channel spacing: | 25kHz (12.5kHz optional) |
| Operating temperature range: | –20 to +55°C. |
| Battery life: | > 8 hours (Lithium battery, 2W power output, 10-10-80)<br>> 7 hours (1500mAh NiMH battery, 5W power output, 5-5-90) |
| Antenna connector: | SMA |
| Microphone connector: | 2.5mm jack (Tron TR20 PLUS) |
| Headset connector: | 3.5mm jack (Tron TR20 PLUS) |
| AF output power internal: | 200mW. |
| AF output power external: | 100mW. |
| Housing material: | Glass-reinforced polycarbonate |
| Display: | Polycarbonate |
| Gasket: | PTS Thermoflex |
| Keyboard: | Silicon |
| Battery lock: | POM |
| Size: | 62mm wide x 160mm height x 41mm depth |
| Weight: | Approx. 420g with NiMH battery<br>Approx. 350g with Lithium battery |

## Receiver

| | |
|---|---|
| Maximum usable sensitivity: | < 1µV for 20dB SINAD |
| Adjacent channel rejection: | > 70dB |
| Blocking: | > 90dB |
| Spurious response: | > 70dB |
| Harmonic distortion: | < 5% |
| Intermodulation rejection: | > 68dB |

## Transmitter

| | | |
|---|---|---|
| RF output power, Hi | 5 W | TR20 PLUS |
| | 2 W | TR20 GMDSS |
| RF output power, Lo | 1 W | TR20 PLUS |
| | 1 W | TR20 GMDSS |

| | |
|---|---|
| Harmonics and spurious: | < 0.25µW |
| Frequency error: | < ±1.5kHz |
| Adjacent channel power: | < -70dBc |

# 3. FUNCTIONAL DESCRIPTION

## *Precautions and Warnings*

### Batteries

Two types of batteries are used:
Rechargeable batteries for normal use (type 80059),
and Lithium batteries for emergency use (type 80060).

The rechargeable battery is of NiMH type with a capacity of 7.2V/1500mAh. The following should be noticed:

- Do not short-circuit, solder, crush, disassemble or incinerate the battery pack. This may result in fire, explosion and severe burn hazard.
- Avoid charging batteries below 0 °C or above 40 °C.

The lithium battery has a capacity of 2000mAh. The following should be noticed:

- The Lithium battery is not rechargeable, and must never be charged.
- Do not short-circuit, solder, crush, disassemble or incinerate the battery pack. This may result in fire, explosion and severe burn hazard.

### Connectors and cables

When handling connectors and cables, notice the following warnings:

- Do not force plugs in place, as this may damage the pins in the plugs.
- Do not pull the cables when removing connectors from the Tron TR20, take instead a firm grip around the connector and pull.

### Display and front panel

Avoid touching the display with sharp objects. Scratches can reduce the visibility.

### Storage and safe handling

Storage temperature range is from –30°C to +70°C and operating temperature is from -20 °C to +55 °C.
Cleaning of the equipment can be done with a cloth soaked in a mixture of ordinary dish-detergent and water.

# 4. OPERATING INSTRUCTIONS

## *Controls*

Fig. 2.1 shows the location of different controls and facilities of the Tron TR20:

1 - PTT (Push To Talk)
2 - Up
3 - Menu
4 - Channel
5 - High / Low power
6 - Channel 16
7 - Battery release
8 - ON / OFF
9 - Down
10 - Squelch
11 - Enter DW/TW
12 - Auxiliary connector
(Tron TR20 Plus only)
13 - Antenna

## *Auxiliary connector*

The auxiliary connector on the Tron TR20 Plus enables the user to connect an external microphone or headset.

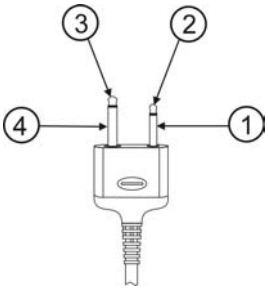


1- Mic ground
2- Mic
3- Speaker
4- Speaker ground

For further instructions on use, please consult the Users Manual.

# 5. TECHNICAL DESCRIPTION

## *Introduction*

The transceiver consists of 3 printed circuit boards.

- Main board (99940)
  This board contains the power supply and power control circuits. In addition the board contains the microcontroller and display.

- Synth/IF board (99936a)
  The synthesiser unit includes the VCO, buffer amplifier and synthesiser for the transceiver. It also contains the IF and detector circuits for the receiver.

- RF board (99936b).
  This board contains the transmitter power amplifier chain, RF switch, the RF front end and first mixer.

Most components used are of surface mount type except some high-power devices.

## *Main board (99940)*

The Main board can be divided into three main sections:

- Audio frequency section.
- Power supply section.
- Control circuits.

## Audio Frequency section

### Microphone amplifier, bandpass filter and modulation adjustment

The microphone is connected via the switch (101) to the VOGAD (Voice-Operated Gain-Adjusting Device) amplifier (IC103).

The gain of this amplifier is automatically adjusted and different acoustic levels will be corrected to give nominal modulation.

When an external microphone is connected, IC101 is used to turn of the internal microphone.
This function is performed by IC104A. It is sensing the presence of an external microphone by sensing the current flowing through the external microphone supply.

The next amplifier stage is operates as gain stage and limiter (IC102A). To prevent the deviation passing ±5kHz, the limiter is clipping signals with a peak level of more than ± 2.5V.

C109 and R108/R110 perform the pre-emphasis of the modulation signal.
The signal then enters the band pass filter (IC102B).
Output from the band pass is fed to IC108. IC108 is a quad D/A converter. The modulation signal is scaled by the D/A converter to give the correct modulation. The microcontroller controls the D/A converter. The signal is then fed to the modulator on the VCO.

### Receiver Audio circuits

The audio signal from the IF section enters through J103 # 19, and is feed to the de-emphasis network (R128, C122), and then to the low pass filter (IC105B). The signal is then feed to the audio output amplifier (IC107). The microcontroller adjusts the volume by varying the voltage on pin 4 with the D/A converter (IC108).

The squelch level is also adjusted with the D/A converter. The level set by the microcontroller is compared with the RSSI signal from the demodulator by IC104B. R135 provides hysteresis to the circuit.

## Control Circuits

The microcontroller (IC109) sets up the synthesiser and controls all functions in the transceiver.
It has a built in ADC with multiplexer which is used to measure the most important parameters in the transceiver. During transmitt the output power is measured to check that the transmitter is actually transmitting, and the lock status of the synthesiser is also checked. Any fault will be indicated on the display. (E1 = Synthesiser out of lock, E2 = No output power).

Configuration data, such as channel settings, volume and squelch settings are stored in an external EEPROM (IC111). Both the graphical display and the synthesiser are controlled via the SPI bus.
Q110 and D106 act as an infrared port used for factory testing.

The microcontroller contains one software module. To read out the software version, enter the main menu and select ”info”. The software version is then shown on the display. The controller is made with flash technology, so firmware upgrade is possible without changing the controller. J104 is the programming port.

## Power supply Circuits

IC113 is the main power switch in the radio. Power off is controlled from the microcontroller.
IC112 is a low drop voltage regulator, and supplies 5V to most of the radio’s circuits.

## *Synth / IF board (99936a).*

### Synthesiser

The synthesiser is located on the Synth/IF board. M1 is the oscillator transistor in the VCO. The oscillator frequency is controlled by the varicaps D2 - D6.

The signal is tapped on the lower side of the tank coil to ensure as high Q as possible. The signal is buffered by the emitter follower Q4, and then feed to the synthesiser (IC2). The synthesiser has a built in dual modulus prescaler. The microcontroller controls the synthesiser via the SPI bus.
The output from the phase comparator (#2) is filtered in a passive loop filter to minimise noise in the output signal.

The modulation signal is applied to D11.

Q6 and surrounding components act as a low noise voltage regulator, filtering the supply voltage for the VCO.

The output signal is feed to the first mixer on the RF board.

## IF circuit

The 21.4 MHz signal from the 1. Mixer on the RF board is feed trough two sections of crystal filters (Y1 and Y2).
The signal is then fed trough a matching network into the IF integrated circuit (IC1). It then enters the second mixer, and is converted down to 450kHz, amplified and feed trough two sections of ceramic band pass filters (FLT1 and FLT2). Then it passes through a limiter circuit and is fed to the discriminator DXR1. This produces demodulated audio on #9, which is fed to the band pass filter on the main board.

The second Local Oscillator, which is a part of the IF circuit, operates at 20.950MHz and also functions as the reference for the synthesiser controlling the 1 LO. The oscillator is voltage controllable, to make frequency adjustment and temperature compensation available for the microcontroller. Frequency adjustment is available from the front panel of the transceiver.

# *RF board (99936b).*

## Receiver front end

The antenna signal enters first the low pass filter, and the first band pass filter. The signal is then amplified by Q1, before entering the second band pass filter. It then enters the first mixer (Q2) were it is mixed with the LO signal from the synthesiser down to 21.4 MHz. The signal is the feed to the Synth/IF board through J1 #11.

## Transmitter section

The LO signal is amplified by Q8 and feed to the mixer in Rx mode, and to the transmitter in Tx mode. IC3 is an integrated output stage with up to 5W output power. The power output is adjusted with the bias pin (#2), and is controlled by the “SET_PWR” signal from the micro controller. IC5 acts as a buffer amplifier.
The output power is detected by D18, and the produced voltage is feed to one of the A/D inputs on the microcontroller to check that the transmitter is actually transmitting.

The output from IC3 is taken through the RF switch (D9,D10), trough the low pass filter to the antenna.

# 6. MAINTENANCE

No maintenance is necessary except to check / tune the LO frequency after 1 year and then every 3rd year.

## *Tuning of LO frequency*

The LO frequency is checked at the antenna output. Unscrew the antenna and connect the output to a frequency counter or a radio testset. Note that the input impedance should be 50Ω, and the input must be able to handle up to 5W of RF power. The connector is standard SMA.

1. Press the “Hi/Lo” key while powering up the Tron TR20 to enable service mode.
2. Set the radio to Low Power by pressing the “Hi/Lo” key.
3. Enter the main menu, and use the arrow keys to select “Ref” adjustment.
4. Press “PTT” and read the frequency on the frequency counter. The limit is ±1.5kHz.
5. If adjustment is required, use the arrow keys to adjust the centre frequency.
6. Press enter to store the setting.

When refitting the antenna, apply a small amount of silicon grease on the mating surface oft the antenna. Tighten with hand force only, make sure that the rubber housing on the antenna mates well with the rubber sealing on the housing.

## *Other adjustments*

The service mode enables access to a few more adjustments.
These are: Power output (High and Low) and modulation.

**Note!** These adjustments are meant for factory use only.

To adjust High Power:

1- Press the “Hi/Lo” key while powering up the Tron TR20 to enable service mode.
2- Set the radio to High Power by pressing the “Hi/Lo” key.
3- Enter the main menu, and use the arrow keys to select “Pwr” adjustment.
4- Press “PTT” and read the output power on a power meter. The output power should be approx. 2W on Tron TR20 GMDSS and 4W – 5W on Tron TR20 PLUS.
5- If adjustment is required, use the arrow keys to adjust the output power.
6- Press enter to store the setting.

To adjust Low Power:

1- Press the “Hi/Lo” key while powering up the Tron TR20 to enable service mode.
2- Set the radio to Low Power by pressing the “Hi/Lo” key.
3- Enter the main menu, and use the arrow keys to select “Pwr” adjustment.
4- Press “PTT” and read the output power on a power meter. The output power should be approx. 1W on Tron TR20 GMDSS and Tron TR20 PLUS.
5- If adjustment is required, use the arrow keys to adjust the output power.
6- Press enter to store the setting.

**NOTE!** On Tron TR20 GMDSS the power output must never be adjusted higher than 2.5W.
If a higher output power is selected, the radio may not operate properly due to the relative high internal resistance of the Lithium battery.

To adjust Modulation:

The radio must be connected to a radio test set, and an audio signal must be applied to the microphone input (Tron TR20 PLUS).

1- Press the “Hi/Lo” key while powering up the Tron TR20 to enable service mode.
2- Set the radio to High Power by pressing the “Hi/Lo” key.
3- Enter the main menu, and use the arrow keys to select “Mod” adjustment.
4- Press “PTT” and read the modulation on a modulation meter.
5- If adjustment is required, use the arrow keys to adjust the modulation.
6- Press enter to store the setting.

# 7. DIAGRAMS

| | |
|---|---|
| Block diagram Tron TR20 | E-80020 |
| Circuit diagram, Main board part 1 | E-99940 -1/2 |
| Circuit diagram, Main board part 2 | E-99940 -2/2 |
| Place plan, Main board, part 1 | KP-99940 -1/2 |
| Place plan, Main board, part 2 | KP-99940 -2/2 |
| Circuit diagram, RF board | E-99936-1/2 |
| Circuit diagram, Synth / IF board | E-99936-2/2 |
| Place plan, Synth / IF board & RF board, part 1 | KP-99936-1/2 |
| Place plan, Synth / IF board & RF board, part 2 | KP-99936-2/2 |
| Circuit diagram, Lithium Battery | E-80060 |
| Circuit diagram, NiMH Battery | E-80059 |

**NOTE!** The place plan drawings show the maximum configuration for a printed circuit board. For components actually fitted on a printed circuit board, please refer to the parts list for that board.

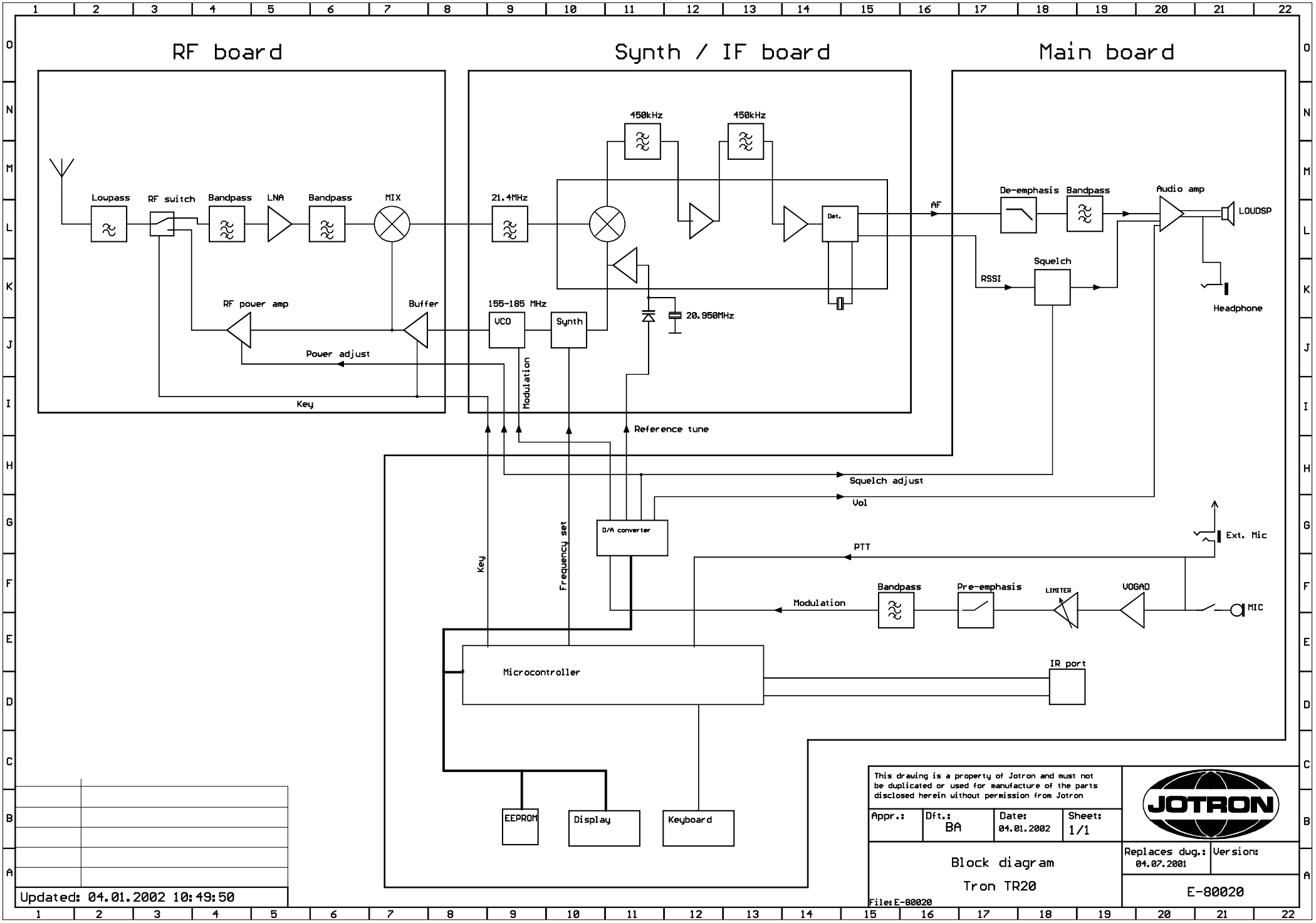
RF board
Synth / IF board
Main board
Loupass
RF switch
Bandpass
LNA
Bandpass
MIX
RF power amp
Buffer
Power adjust
Key
21.4MHz
450kHz
450kHz
Det.
155-185 MHz
VCO
Synth
20.950MHz
Modulation
Reference tune
AF
De-emphasis
Bandpass
Audio amp
LOUDSP
Squelch
RSSI
Headphone
Squelch adjust
Vol
D/A converter
Key
Frequency set
PTT
Ext. Mic
Bandpass
Pre-emphasis
LIMITER
VOGAD
Modulation
MIC
Microcontroller
IR port
EEPROM
Display
Keyboard
This drawing is a property of Jotron and must not be duplicated or used for manufacture of the parts disclosed herein without permission from Jotron
Appr.:
Dft.: BA
Date: 04.01.2002
Sheet: 1/1
JOTRON
Block diagram
Tron TR20
File: E-80020
Replaces dwg.: 04.07.2001
Version:
E-80020
Updated: 04.01.2002 10:49:50

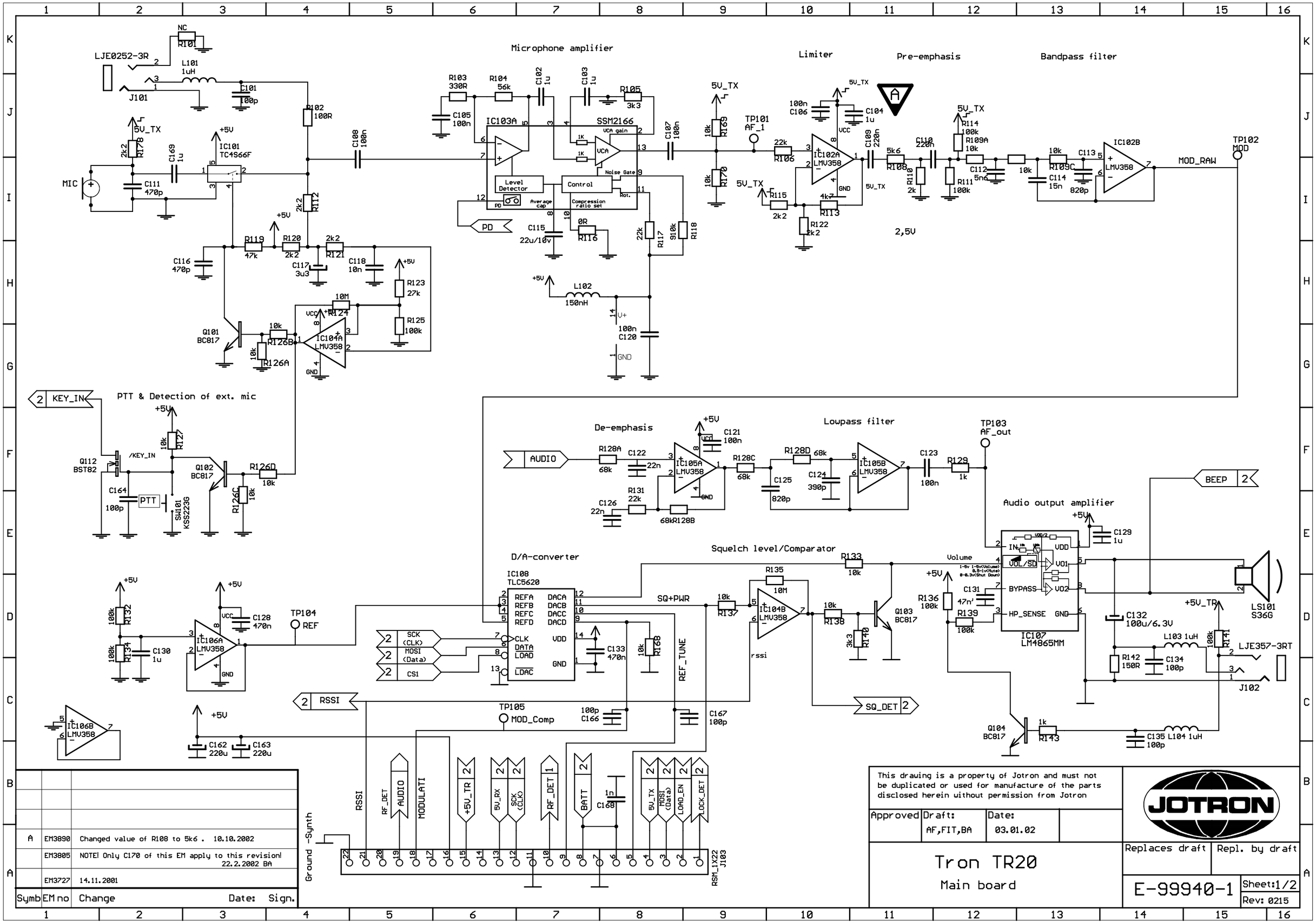


| Symb | EM no | Change | Date: | Sign. |
|---|---|---|---|---|
| A | EM3890 | Changed value of R108 to 5k6 . | 10.10.2002 | |
| | EM3805 | NOTE! Only C170 of this EM apply to this revision! | 22.2.2002 | BA |
| | EM3727 | 14.11.2001 | | |

This drawing is a property of Jotron and must not be duplicated or used for manufacture of the parts disclosed herein without permission from Jotron

| Approved | Draft: | Date: |
|---|---|---|
| | AF,FIT,BA | 03.01.02 |

JOTRON

# Tron TR20

Main board

Replaces draft | Repl. by draft

E-99940-1

Sheet:1/2

Rev: 0215

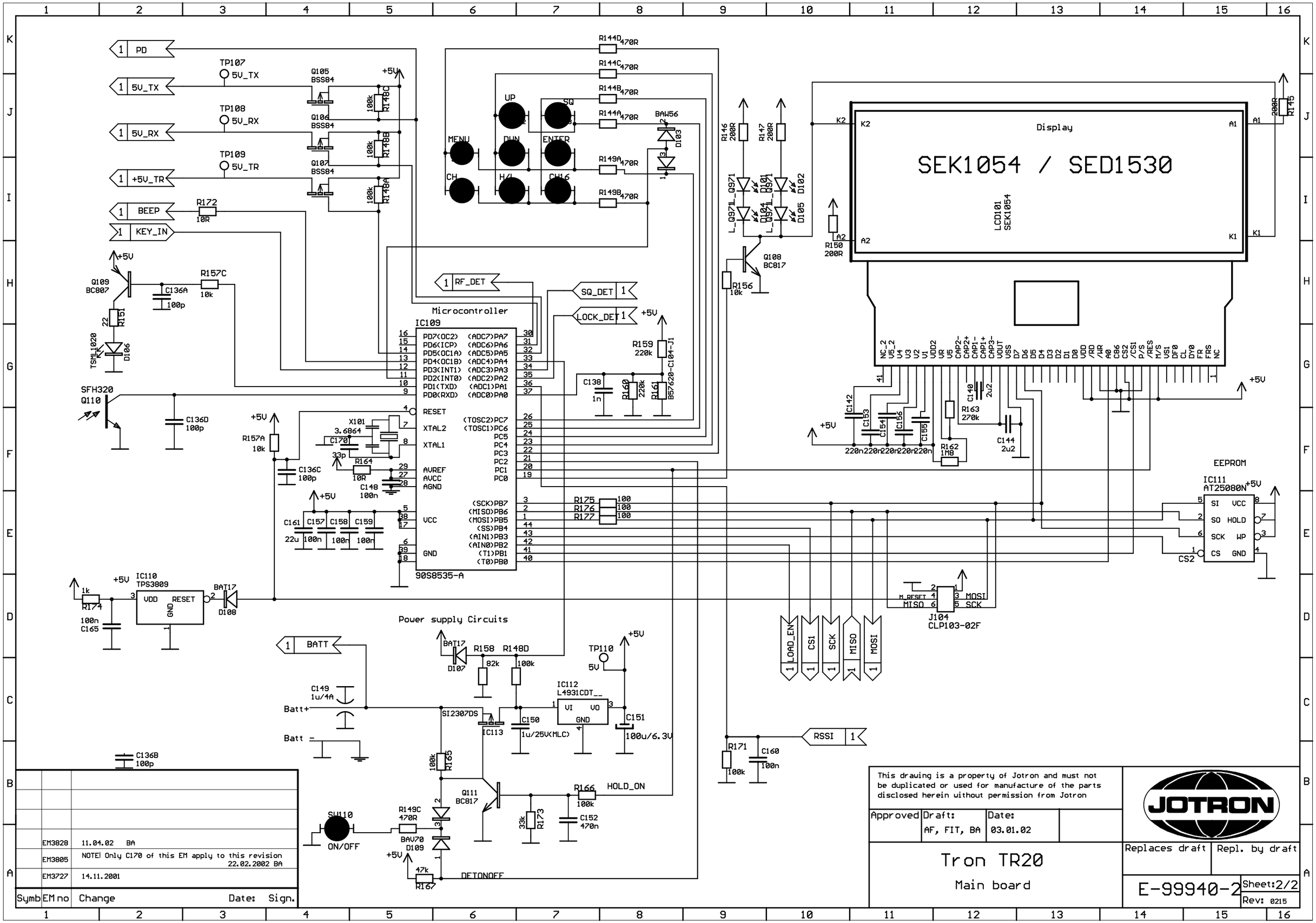


09.01.2003 12:53:48 f=0.99 M:/Products/TR20/Technical_Info/Drawing_Electrical/TR20/Mainboard/0215/99879mod.sch (Sheet: 2/2)

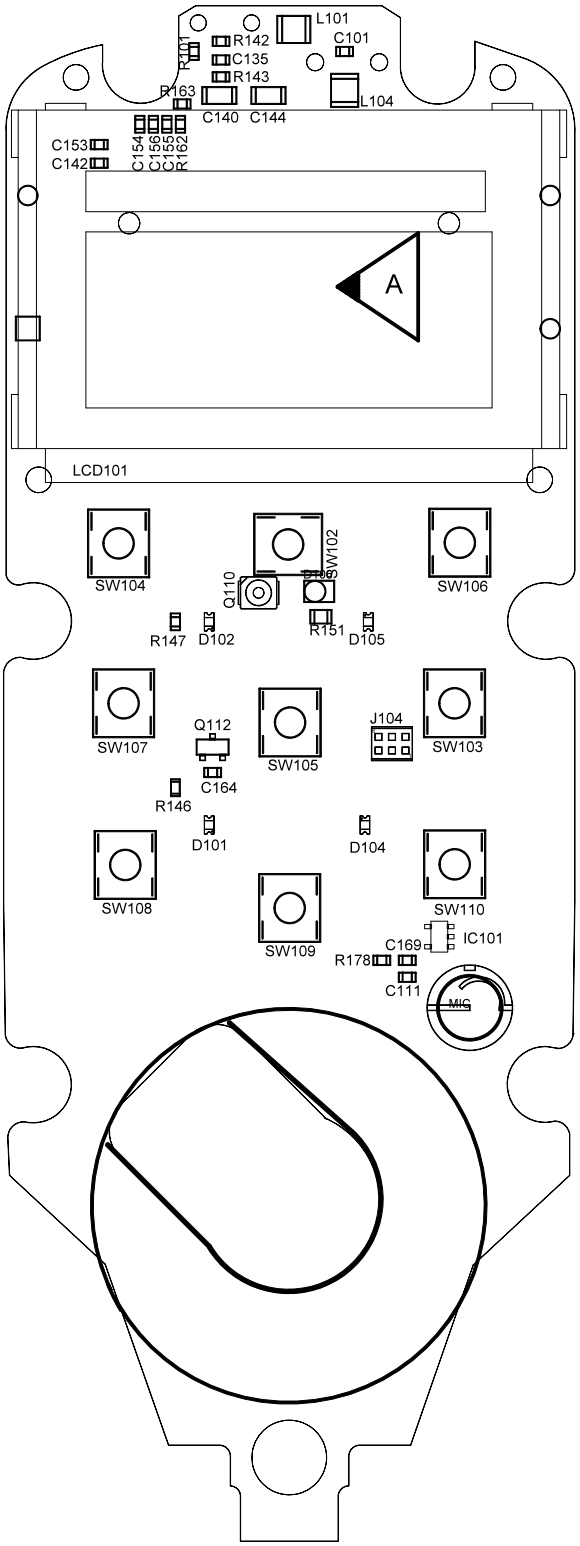


| | | | |
|---|---|---|---|
| A | EM3828 | 11.04.02 | BA |
| | EM3805 | 22.02.02 | BA |
| | EM3727 | 14.11.2001 | BA |
| Symb | EM no | Change | Date: Sign. |

This d
mu
manu
withou

| Appr.: | Dft.: FI/EH/BA | Date: 26.11.01 |
|---|---|---|

Tron TR20
Main board
Comp. placement, layer 1

JOTRON

Replaces d | Repl. by d

KP-99940-1

Rev: 0215

09.01.2003 11:03:32 f=1.41 M:/Products/TR20/Technical_Info/Drawing_Electrical/TR20/Mainboard/0215/99879mod.brd

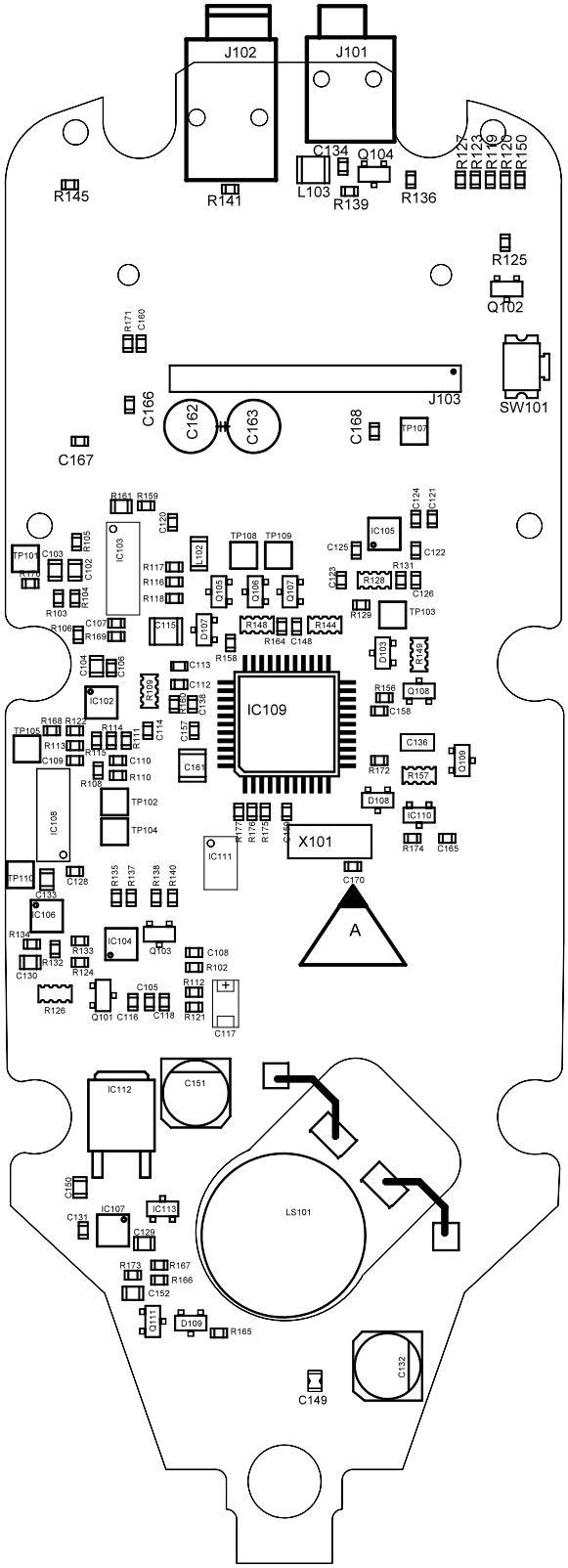


| | | | | | |
|---|---|---|---|---|---|
| | | | This d<br>mu<br>manu<br>withou | | |
| | | | Appr.: | Dft.: FIT/EH/BA | Date: 26.11.01 |
| | EM3824 | 10.04.02 BA | Tron TR20<br>Main Board<br>Comp placement, layer 4 | Replaces d<br>16.08.01 | Repl. by d |
| A | EM3805 | C170 mou | | KP-99940-2 | Rev: 0215 |
| | EM3727 | 14.11.01 BA | | | |
| Symb | EM no | Change Date: Sign. | | | |

JOTRON

09.01.2003 11:04:23 f=1.41 mirrored M:/Products/TR20/Technical_Info/Drawing_Electrical/TR20/Mainboard/0215/99879mo

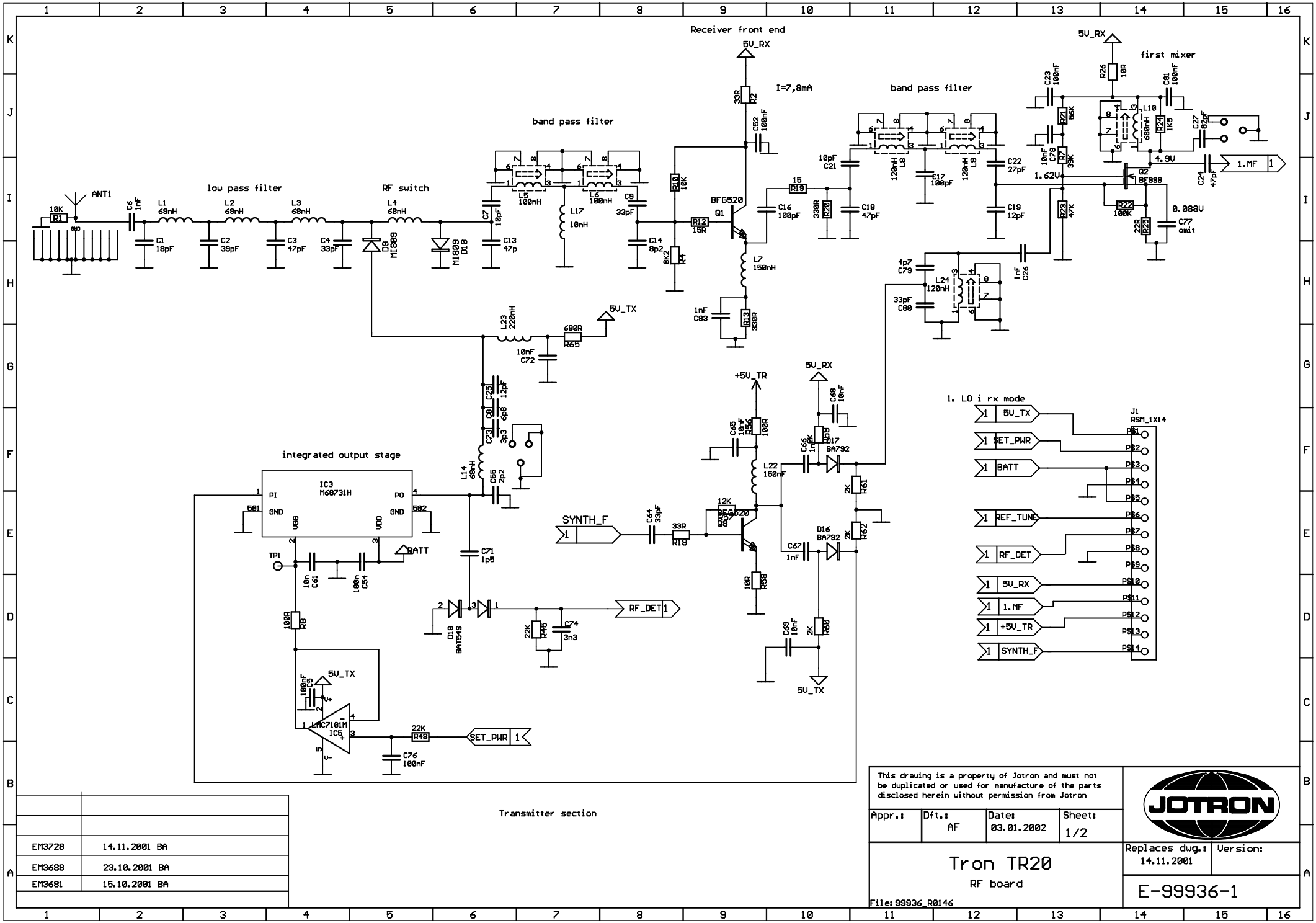


| | |
|---|---|
| EM3728 | 14.11.2001 BA |
| EM3688 | 23.10.2001 BA |
| EM3681 | 15.10.2001 BA |

This drawing is a property of Jotron and must not be duplicated or used for manufacture of the parts disclosed herein without permission from Jotron

| Appr.: | Dft.: | Date: | Sheet: |
|---|---|---|---|
| | AF | 03.01.2002 | 1/2 |

JOTRON

# Tron TR20

RF board

File: 99936_R0146

Replaces dwg.: 14.11.2001

Version:

E-99936-1

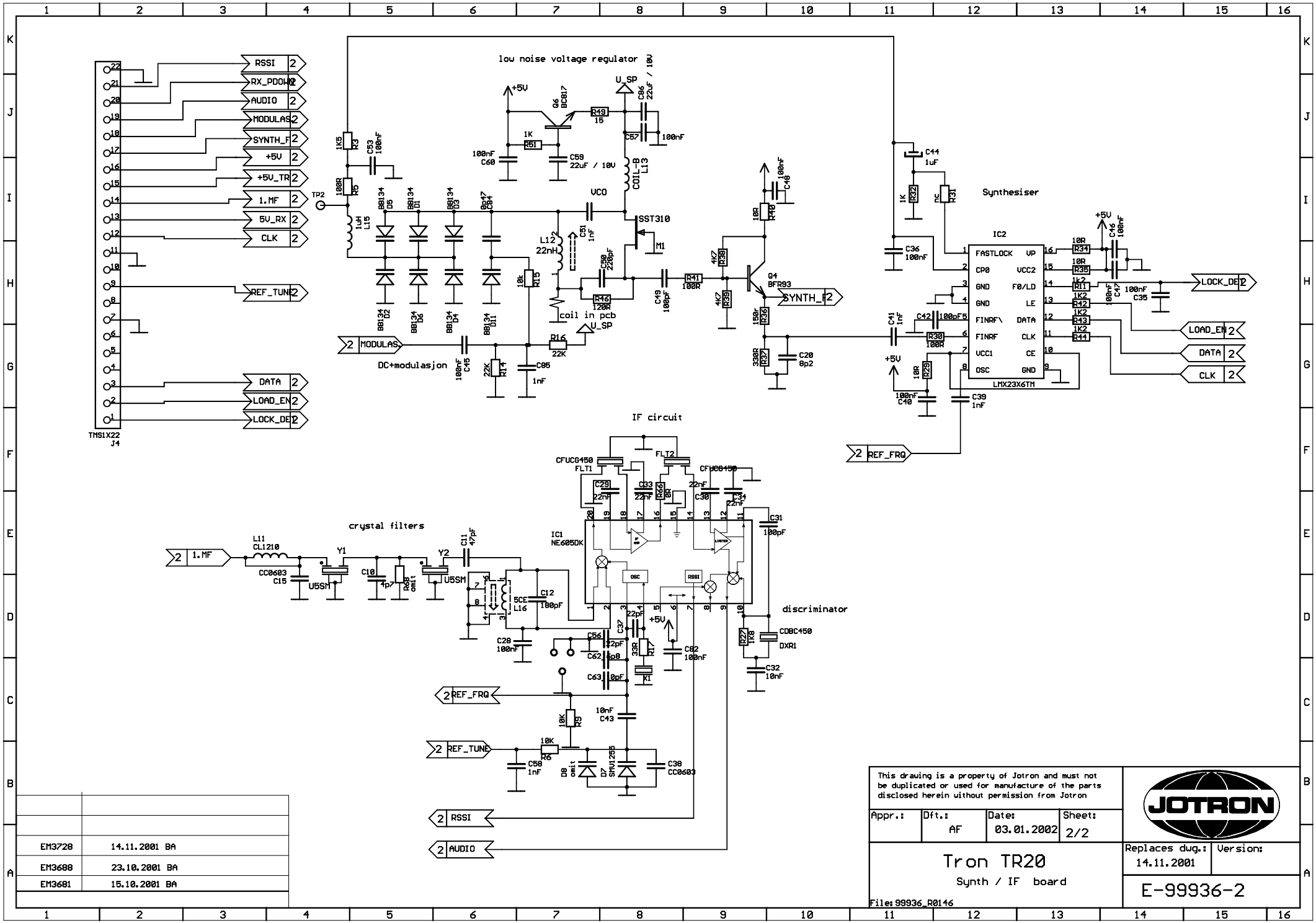


| | |
|---|---|
| EM3728 | 14.11.2001 BA |
| EM3688 | 23.10.2001 BA |
| EM3681 | 15.10.2001 BA |

This drawing is a property of Jotron and must not be duplicated or used for manufacture of the parts disclosed herein without permission from Jotron

| Appr.: | Dft.: | Date: | Sheet: |
|---|---|---|---|
| | AF | 03.01.2002 | 2/2 |

JOTRON

# Tron TR20

Synth / IF board

File: 99936_R0146

Replaces dwg.: 14.11.2001

Version:

E-99936-2

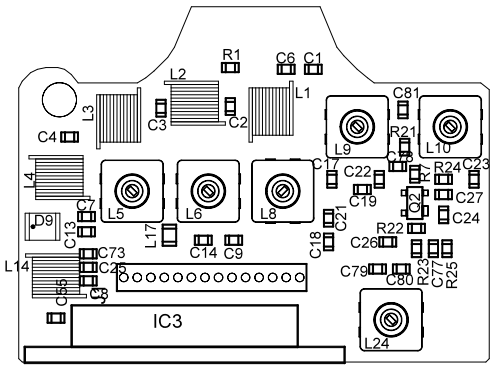


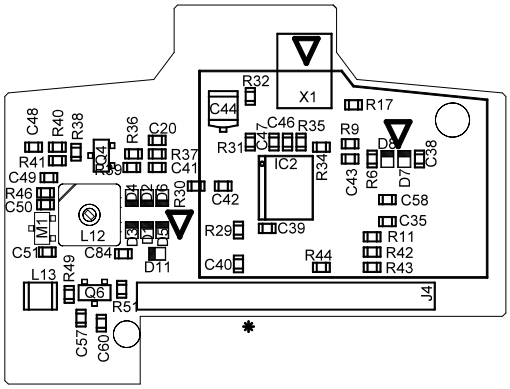


| | | |
|---|---|---|
| ✱ | EM3860 | 25.07.02 Drill |
| Δ | EM3825 | 10.04.02 AF |
| | EM3810 | X2 changed |
| | EM3728 | 14.11.2001 BA |
| | EM3688 | 23.10.2001 BA |
| | EM3681 | 15.10.2001 BA |
| Symb | EM no | Change Date: Sign. |

This d
mu
manu
withou

| Appr.: | Dft.: | Date: |
|---|---|---|
| | AF | 05.03.2002 |

Component placement, top sid
Synth / IF board
Tron TR20

JOTRON

Replaces d 03.01.2002

Repl. by d

KP-99936-1

Rev: 0230

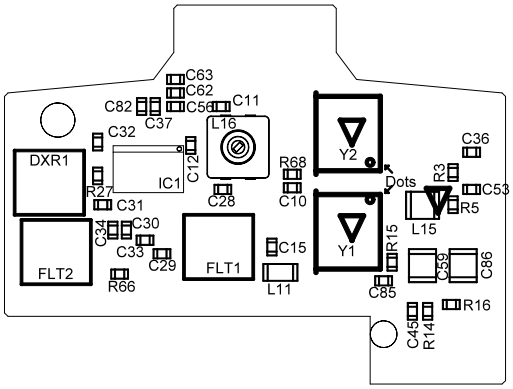


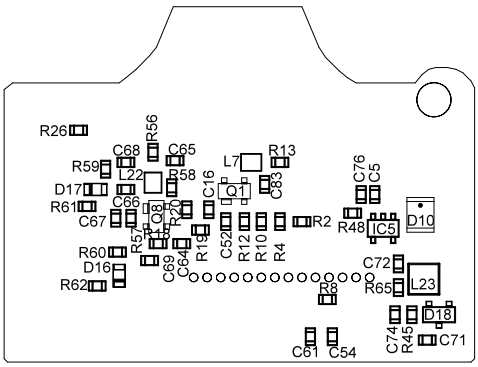


| | | | | | |
|---|---|---|---|---|---|
| | | | This d<br>mu<br>manu<br>withou | | |
| * | EM3860 | 25.07.02 Drill d | | | |
| | EM3825 | 10.04.02 AF | Appr.: AF | Dft.: 03.02.2002 | Date: |
| | EM3810 | X2 changed | | | |
| | EM3728 | 14.11.2001 BA | | | |
| | EM3688 | 23.10.2001 BA | Component placement, bottom sid | Replaces d 14.11.2001 | Repl. by d |
| | EM3681 | 15.10.2001 BA | Synth / IF board | | |
| Symb | EM no | Change Date: Sign. | Tron TR20 | KP-99936-2 | Rev: 0230 |

JOTRON

09.01.2003 11:07:57 f=1.41 mirrored M:/Products/TR20/Technical_Info/Drawing_Electrical/TR20/RF_board/R0230/99936_r

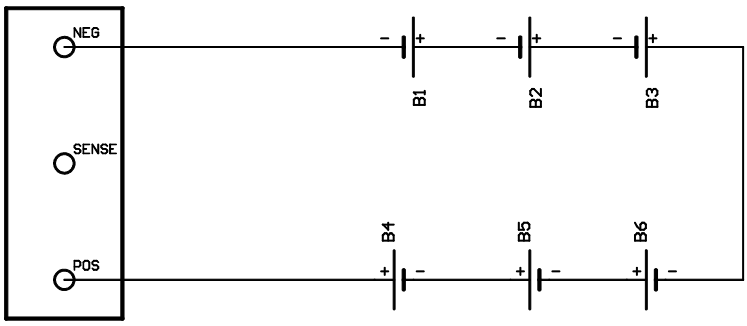


This drawing is a property of Jotron and must not be duplicated or used for manufacture of the parts disclosed herein without permission from Jotron

| Appr.: | Dft.: | Date: | Sheet: |
|---|---|---|---|
| | BA | 06.12.2001 | 1/1 |

Lithium battery
Tron TR20

File: 80060

Replaces dwg.:

Version:

E-80060

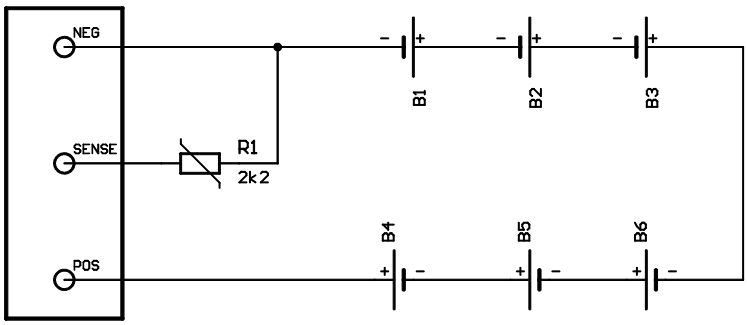


This drawing is a property of Jotron and must not be duplicated or used for manufacture of the parts disclosed herein without permission from Jotron

| Appr.: | Dft.: | Date: | Sheet: |
|---|---|---|---|
| | BA | 06.12.2001 | 1/1 |

NiMH battery
Tron TR20

File: 80059

Replaces dwg.:

Version:

E-80059

# 8. PARTS LISTS

- Part list, Complete Transceiver BOM-99930
- Part list, Main Board BOM-99940
- Part list, RF Unit BOM-99936
- Part list, Lithium Battery BOM-80060
- Part list, NiMH Battery BOM-80059

# JOTRON electronics a.s.

## Bill Of Material

**Date 16.11.2001**

**Item** **99930** **Tron TR20 PORTABLE GMDSS RADIO** **Manufacturing Version**

| Item | Name / Description | Makes no. / Additional name | Sub pos. |
|---|---|---|---|
| 80030 | Complete front (GMDSS) | | 1 |
| 99944 | Brytertapp for PTT | ABS | 10 |
| 99893 | Pakningstiver | Delrin 507 | 10 |
| 99906 | Screw 2,5x10 | PT-Screw KB25 x 10 WW 1451 | 11 |
| 99877 | BATTERISNEPP | TRON VHF MkII | 12 |
| 99936 | RF board complete | Front end + synth.board | 13 |
| 99928 | Batterikontaktpinne | | 14 |
| 80020 | El.unit complete (GMDSS) | | 3 |
| 99880 | ANTENNA for Tron TR-20 | | 4 |
| 99926 | Antennekontakt | | 5 |
| 99912 | Tetningshette v/headset conn. | | 5 |
| 99871 | BAKDEKSEL | Lexan 503R Orange (6312 12,75) | 6 |
| 99876 | HOVEDPAKNING/RADIO | TRON VHF MkII | 7 |
| 99874 | BELTEKLIPS | Delrin 500 Sort | 8 |
| 99932 | O-ring | Simrit 72 NBR 872 (Ø3,1 x 1,0x5,0) | 9 |

# JOTRON electronics a.s.



## Bill Of Material

Date 16.11.2001

**Item** 99940 **Mainboard complete** **Design**

**Version** EM3727

| Item | Name / Description | Makes no. / Additional name | Sub pos. |
|---|---|---|---|
| 98284 | CHIP CAP 100p 50V - 0603 | MURATA GRM39 COG 101J 50 | C101 |
| 99796 | CHIP CAP 1uF 16v X7R 0805 | MURATA GRM40 X7R 105M 16 | C102 |
| 99796 | CHIP CAP 1uF 16v X7R 0805 | MURATA GRM40 X7R 105M 16 | C103 |
| 99796 | CHIP CAP 1uF 16v X7R 0805 | MURATA GRM40 X7R 105M 16 | C104 |
| 98322 | CHIP CAP 100n 25V - 0603 | MURATA GRM39 X7R 104Z 25 | C105 |
| 98322 | CHIP CAP 100n 25V - 0603 | MURATA GRM39 X7R 104Z 25 | C106 |
| 98322 | CHIP CAP 100n 25V - 0603 | MURATA GRM39 X7R 104Z 25 | C107 |
| 98322 | CHIP CAP 100n 25V - 0603 | MURATA GRM39 X7R 104Z 25 | C108 |
| 98329 | CHIP CAP 220n 16V - 0603 (Y5V) | MURATA GRM39Y5V224Z16 | C109 |
| 98329 | CHIP CAP 220n 16V - 0603 (Y5V) | MURATA GRM39Y5V224Z16 | C110 |
| 98291 | CHIP CAP 470p 50V - 0603 (COG) | MURATA GRM39 COG 471J 50S | C111 |
| 98308 | CHIP CAP 5n6 50v - 0603 | MURATA GRM39 X7R 562K 50 | C112 |
| 98294 | CHIP CAP 820p 25V - 0603 (COH) | MURATA GRM39 COH 821J 25S | C113 |
| 98311 | CHIP CAP 15n 50V - 0603 | MURATA GRM39 X7R 153K 50 | C114 |
| 99657 | 1210 - 22 uF/10 V Ceramic capacitor | MURATA GRM235Y5V226Z10 | C115 |
| 98291 | CHIP CAP 470p 50V - 0603 (COG) | MURATA GRM39 COG 471J 50S | C116 |
| 97357 | CHIP TANTAL 3u3 16V LTA-B | ELNA SK-1C 335 M-RB | C117 |
| 98310 | CHIP CAP 10n 50V - 0603 (X7R) | MURATA GRM39 X7R 103K 50 | C118 |
| 98322 | CHIP CAP 100n 25V - 0603 | MURATA GRM39 X7R 104Z 25 | C120 |
| 98322 | CHIP CAP 100n 25V - 0603 | MURATA GRM39 X7R 104Z 25 | C121 |
| 98312 | CHIP CAP 22n 25V - 0603 | MURATA GRM39 X7R 223K 25 | C122 |
| 93225 | CHIP CAP 100nF 50V X7R 10% - 0805 | MURATA GRM40 X7R 104 K50 | C123 |
| 98290 | CHIP CAP 390p 50V - 0603 | MURATA GRM39 COG 391J 50S | C124 |
| 98294 | CHIP CAP 820p 25V - 0603 (COH) | MURATA GRM39 COH 821J 25S | C125 |
| 98317 | CHIP CAP 22n 50V - 0603 | MURATA GRM39 Y5V 223Z 50 | C126 |
| 98295 | CHIP CAP 470n 16V - 0603 (Y5V) | MURATA GRM39 Y5V 474Z 16PT | C128 |
| 99796 | CHIP CAP 1uF 16v X7R 0805 | MURATA GRM40 X7R 105M 16 | C129 |
| 99796 | CHIP CAP 1uF 16v X7R 0805 | MURATA GRM40 X7R 105M 16 | C130 |
| 98319 | CHIP CAP 47n 50V - 0603 | MURATA GRM39 Y5V 473Z 50 | C131 |
| 80012 | Chip El.lytt 100u/6.3v F46 | NIPPON CHEMI-CON MVS6.3VC100M F46 TP | C132 |
| 95718 | CHIP CAP 470nF 16V | MURATA GRM40 Y5V 474Z 16 | C133 |
| 98284 | CHIP CAP 100p 50V - 0603 | MURATA GRM39 COG 101J 50 | C134 |
| 98284 | CHIP CAP 100p 50V - 0603 | MURATA GRM39 COG 101J 50 | C135 |
| 80041 | Chip Cap. Array, 4x100p/1206, GNM30-401 | MURATA GNM30-401COG101K050 | C136 |
| OMIT | Utgår | | C137 |
| OMIT | Utgår | | C139 |
| 92365 | CHIP CAP 2u2 16V Y5V | MURATA GRM42-6 Y5V 225 Z16 | C140 |
| OMIT | Utgår | | C141 |
| 98329 | CHIP CAP 220n 16V - 0603 (Y5V) | MURATA GRM39Y5V224Z16 | C142 |
| 92365 | CHIP CAP 2u2 16V Y5V | MURATA GRM42-6 Y5V 225 Z16 | C144 |
| OMIT | Utgår | | C145 |
| OMIT | Utgår | | C146 |
| OMIT | Utgår | | C147 |
| 98322 | CHIP CAP 100n 25V - 0603 | MURATA GRM39 X7R 104Z 25 | C148 |
| 80042 | EMI FILTER 1u0 CHIP 0805 | MURATA NFM2012P13C105FT1M00 | C149 |

# JOTRON electronics a.s.



## Bill Of Material

Date 16.11.2001

**Item** 99940 **Mainboard complete** **Design**

**Version** EM3727

| Item | Name / Description | Makes no. / Additional name | Sub pos. |
|---|---|---|---|
| 99796 | CHIP CAP 1uF 16v X7R 0805 | MURATA GRM40 X7R 105M 16 | C150 |
| 80012 | Chip El.lytt 100u/6.3v F46 | NIPPON CHEMI-CON MVS6.3VC100M F46 TP | C151 |
| 95718 | CHIP CAP 470nF 16V | MURATA GRM40 Y5V 474Z 16 | C152 |
| 98329 | CHIP CAP 220n 16V - 0603 (Y5V) | MURATA GRM39Y5V224Z16 | C153 |
| 98329 | CHIP CAP 220n 16V - 0603 (Y5V) | MURATA GRM39Y5V224Z16 | C154 |
| 98329 | CHIP CAP 220n 16V - 0603 (Y5V) | MURATA GRM39Y5V224Z16 | C155 |
| 98329 | CHIP CAP 220n 16V - 0603 (Y5V) | MURATA GRM39Y5V224Z16 | C156 |
| 98322 | CHIP CAP 100n 25V - 0603 | MURATA GRM39 X7R 104Z 25 | C157 |
| 98322 | CHIP CAP 100n 25V - 0603 | MURATA GRM39 X7R 104Z 25 | C158 |
| 98322 | CHIP CAP 100n 25V - 0603 | MURATA GRM39 X7R 104Z 25 | C159 |
| 98322 | CHIP CAP 100n 25V - 0603 | MURATA GRM39 X7R 104Z 25 | C160 |
| 99657 | 1210 - 22 uF/10 V Ceramic capacitor | MURATA GRM235Y5V226Z10 | C161 |
| 99797 | EL..CAP 220uF,6.3V, low ESR, 5mm high | Sanyo UAX 220uF/6.3V | C162 |
| 99797 | EL..CAP 220uF,6.3V, low ESR, 5mm high | Sanyo UAX 220uF/6.3V | C163 |
| 98284 | CHIP CAP 100p 50V - 0603 | MURATA GRM39 COG 101J 50 | C164 |
| 98284 | CHIP CAP 100p 50V - 0603 | MURATA GRM39 COG 101J 50 | C165 |
| 98300 | CHIP CAP 1n 50V - 0603 | MURATA GRM39 X7R 102K 50 | C166 |
| 99292 | CHIP CAP 1u 10V - 0603 (Y5V) | MURATA GRM39Y5V105Z10 | C169 |
| 80029 | LED, Green, SMD, 0603 | Infineon Technologies AG LGQ971- Q62702-P5189 | D101 |
| 80029 | LED, Green, SMD, 0603 | Infineon Technologies AG LGQ971- Q62702-P5189 | D102 |
| 94432 | DIODE BAW 56 SOT-23 | PHILIPS BAW56,215 | D103 |
| 80029 | LED, Green, SMD, 0603 | Infineon Technologies AG LGQ971- Q62702-P5189 | D104 |
| 80029 | LED, Green, SMD, 0603 | Infineon Technologies AG LGQ971- Q62702-P5189 | D105 |
| 80019 | LED, IR, 950nm, Topled, SMD, P-LCC-2 | SIEMENS Q62702-P1690 | D106 |
| 94435 | DIODE BAT 17 SOT-23 | PHILIPS BAT17,215 | D107 |
| 94435 | DIODE BAT 17 SOT-23 | PHILIPS BAT17,215 | D108 |
| 93099 | DUAL DIODE BAV70 | PHILIPS BAV70,215 | D109 |
| 93101 | SINGLE GATE L-MOS SWITCH | TOSHIBA TC4S66F | IC101 |
| 80033 | Op.Amp, Dual, L-volt, RR-o, LMV358,MSOP8 | National LMV358MM | IC102 |
| 94763 | Microphone Preamplifier SSM2166 | Analog Devices SSM2166S (S0-14) | IC103 |
| 80033 | Op.Amp, Dual, L-volt, RR-o, LMV358,MSOP8 | National LMV358MM | IC104 |
| 80033 | Op.Amp, Dual, L-volt, RR-o, LMV358,MSOP8 | National LMV358MM | IC105 |
| 80033 | Op.Amp, Dual, L-volt, RR-o, LMV358,MSOP8 | National LMV358MM | IC106 |
| 80034 | Amp, Audio, 750mW w/hp, LM4865, MSOP8 | National LM4865MM | IC107 |
| 80036 | D/A, 8-bit, 4-ch, SPI, TLC5620, SO-14 | Texas TLC5620ID | IC108 |
| 80043 | Microcontroller, ATmega163L, SMD,TQFP-44 | Atmel ATmega163L-4AI | IC109 |
| 80037 | Volt.Sup., 3.3V, 200ms, TPS3809, SOT-23 | Texas TPS3809K33DBVT | IC110 |
| 99073 | AT25080, 1024x8 SPI EEPROM, SMD | Atmel AT25080N-10SI | IC111 |
| 80038 | Volt.reg, 5v, 250mA/0.4v, L4931, D-pak | SGS L4931CDT50 | IC112 |
| 99762 | SI2307, P-MFET,30V, 80mOhm@10V, SOT-23 | Siliconix SI2307DS | IC113 |
| OMIT | Utgår | | J101 |
| OMIT | Utgår | | J102 |
| 80026 | Socket, 1x22, 1.27mm, SMD | Samtec RSM-122-02-L-S-K | J103 |
| 80024 | Socket, Low profile, 2x3, 1.27mm, SMD | Samtec CLP-103-02-F-D | J104 |
| 93158 | DROSSEL 1.0uH SMD - 1210 | SIEMENS B82422-A1102-K100 | L101 |

# JOTRON electronics a.s.



## Bill Of Material

Date 16.11.2001

**Item** 99940 **Mainboard complete** **Design**

**Version** EM3727

| Item | Name / Description | Makes no. / Additional name | Sub pos. |
|---|---|---|---|
| 97411 | DROSSEL SMD 150nH | SIEMENS B82422-A3151-K100 | L102 |
| 93158 | DROSSEL 1.0uH SMD - 1210 | SIEMENS B82422-A1102-K100 | L103 |
| 93158 | DROSSEL 1.0uH SMD - 1210 | SIEMENS B82422-A1102-K100 | L104 |
| 99899 | DISPLAY - LCD SEK1054 | SEIKO SEK1054B-7a | LCD101 |
| 80023 | Loudspeaker, Myl, 36x4.8 mm , 8R, 1/2 w | Veco, Vansonic Enterprise Co 36S08FNM50B | LS101 |
| 80022 | Microphone, 8x5mm ,omni-dir, elect | Veco, Vansonic Enterprise Co VM-54LP | MIC000 |
| 99879 | PCB HOVEDKORT | TRON VHF MkII | PCB |
| 94443 | TRANSISTOR BC 817 SOT-23 | PHILIPS BC817,215 | Q101 |
| 94443 | TRANSISTOR BC 817 SOT-23 | PHILIPS BC817,215 | Q102 |
| 94443 | TRANSISTOR BC 817 SOT-23 | PHILIPS BC817,215 | Q103 |
| 94443 | TRANSISTOR BC 817 SOT-23 | PHILIPS BC817,215 | Q104 |
| 97677 | MOSFET | PHILIPS BSS84 | Q105 |
| 97677 | MOSFET | PHILIPS BSS84 | Q106 |
| 97677 | MOSFET | PHILIPS BSS84 | Q107 |
| 94443 | TRANSISTOR BC 817 SOT-23 | PHILIPS BC817,215 | Q108 |
| 94444 | TRANSISTOR BC 807 SOT-23 | PHILIPS BC807,215 | Q109 |
| 80021 | Photo Transistor, NPN, Topled, SMD | SIEMENS Q62702-P1607 | Q110 |
| 94443 | TRANSISTOR BC 817 SOT-23 | PHILIPS BC817,215 | Q111 |
| 96984 | TRANSISTOR MOSFET BST 82 | PHILIPS BST82,215 | Q112 |
| OMIT | Utgår | | R101 |
| 98399 | CR 0603 100R 1% | ROHM MCR03 EZP FX-1000 | R102 |
| 98411 | CR 0603 330R 1% | ROHM MCR03 EZP FX-3300 | R103 |
| 98465 | CR 0603 56k 1% | ROHM MCR03 EZP FX-5602 | R104 |
| 98435 | CR 0603 3k3 1% | ROHM MCR03 EZP FX-3301 | R105 |
| 98455 | CR 0603 22k 1% | ROHM MCR03 EZP FX-2202 | R106 |
| OMIT | Utgår | | R107 |
| 98451 | CR 0603 15k 1% | ROHM MCR03 EZP FX-1502 | R108 |
| 99294 | ARC241 4x0603 resistor array 10k (1206) | PHILIPS 2350 034 10103 | R109 |
| 98430 | CR 0603 2k0 1% | ROHM MCR03 EZP FX-2001 | R110 |
| 98470 | CR 0603 100k 1% | ROHM MCR03 EZP FX-1003 | R111 |
| 98431 | CR 0603 2k2 1% | ROHM MCR03 EZP FX-2201 | R112 |
| 98439 | CR 0603 4K7 1% | ROHM MCR03 EZP FX-4701 | R113 |
| 98470 | CR 0603 100k 1% | ROHM MCR03 EZP FX-1003 | R114 |
| 98431 | CR 0603 2k2 1% | ROHM MCR03 EZP FX-2201 | R115 |
| 98703 | CR 0603 0R 1% | ROHM 0603 jump | R116 |
| 98455 | CR 0603 22k 1% | ROHM MCR03 EZP FX-2202 | R117 |
| 98492 | CR 0603 910k 1% | ROHM MCR03 EZP FX-9103 | R118 |
| 98463 | CR 0603 47k 1% | ROHM MCR03 EZP FX-4702 | R119 |
| 98423 | CR 0603 1k0 1% | ROHM MCR03 EZP FX-1001 | R120 |
| 98431 | CR 0603 2k2 1% | ROHM MCR03 EZP FX-2201 | R121 |
| 98431 | CR 0603 2k2 1% | ROHM MCR03 EZP FX-2201 | R122 |
| 98457 | CR 0603 27k 1% | ROHM MCR03 EZP FX-2702 | R123 |
| 98506 | CR 0603 10M 5% | ROHM MCR03 EZH J-1005 | R124 |
| 98470 | CR 0603 100k 1% | ROHM MCR03 EZP FX-1003 | R125 |
| 99294 | ARC241 4x0603 resistor array 10k (1206) | PHILIPS 2350 034 10103 | R126 |

# JOTRON electronics a.s.



## Bill Of Material

Date 16.11.2001

**Item** 99940 **Mainboard complete** **Design**

**Version** EM3727

| Item | Name / Description | Makes no. / Additional name | Sub pos. |
|---|---|---|---|
| 98447 | CR 0603 10k 1% | ROHM MCR03 EZP FX-1002 | R127 |
| 99295 | ARC241 4x0603 resistor array 68k (1206) | PHILIPS 2350 034 10683 | R128 |
| 98423 | CR 0603 1k0 1% | ROHM MCR03 EZP FX-1001 | R129 |
| OMIT | Utgår | | R130 |
| 98455 | CR 0603 22k 1% | ROHM MCR03 EZP FX-2202 | R131 |
| 98470 | CR 0603 100k 1% | ROHM MCR03 EZP FX-1003 | R132 |
| 98447 | CR 0603 10k 1% | ROHM MCR03 EZP FX-1002 | R133 |
| 98470 | CR 0603 100k 1% | ROHM MCR03 EZP FX-1003 | R134 |
| 98506 | CR 0603 10M 5% | ROHM MCR03 EZH J-1005 | R135 |
| 98470 | CR 0603 100k 1% | ROHM MCR03 EZP FX-1003 | R136 |
| 98447 | CR 0603 10k 1% | ROHM MCR03 EZP FX-1002 | R137 |
| 98447 | CR 0603 10k 1% | ROHM MCR03 EZP FX-1002 | R138 |
| 98470 | CR 0603 100k 1% | ROHM MCR03 EZP FX-1003 | R139 |
| 98435 | CR 0603 3k3 1% | ROHM MCR03 EZP FX-3301 | R140 |
| 98470 | CR 0603 100k 1% | ROHM MCR03 EZP FX-1003 | R141 |
| 98403 | CR 0603 150R 1% | ROHM MCR03 EZP FX-1500 | R142 |
| 98423 | CR 0603 1k0 1% | ROHM MCR03 EZP FX-1001 | R143 |
| 80013 | ARC241 4x0603 resistor array 470R (1206) | PHILIPS 2350 034 10471 | R144 |
| 98407 | CR 0603 200R 1% | ROHM MCR03 EZP FX-2000 | R145 |
| 98407 | CR 0603 200R 1% | ROHM MCR03 EZP FX-2000 | R146 |
| 98407 | CR 0603 200R 1% | ROHM MCR03 EZP FX-2000 | R147 |
| 80014 | ARC241 4x0603 resistor array 100k (1206) | PHILIPS 2350 034 10104 | R148 |
| 80013 | ARC241 4x0603 resistor array 470R (1206) | PHILIPS 2350 034 10471 | R149 |
| 98407 | CR 0603 200R 1% | ROHM MCR03 EZP FX-2000 | R150 |
| 98393 | CR 0603 56R 5% | ROHM MCR03 EZH J-56R | R151 |
| OMIT | Utgår | | R152 |
| OMIT | Utgår | | R153 |
| OMIT | Utgår | | R154 |
| 98447 | CR 0603 10k 1% | ROHM MCR03 EZP FX-1002 | R156 |
| 99294 | ARC241 4x0603 resistor array 10k (1206) | PHILIPS 2350 034 10103 | R157 |
| 98478 | CR 0603 220k 1% | ROHM MCR03 EZP FX-2203 | R159 |
| 98478 | CR 0603 220k 1% | ROHM MCR03 EZP FX-2203 | R160 |
| 80015 | Chip Resistor, NTC, 220k, 0805 | Epcos B57620-C224-K62 | R161 |
| 98496 | CR 0603 1M8 5% | ROHM MCR03 EZH J-1804 | R162 |
| 98480 | CR 0603 270k 1% | ROHM MCR03 EZP FX-2703 | R163 |
| 98375 | CR 0603 10R 5% | ROHM MCR03 EZH J-10R | R164 |
| 98470 | CR 0603 100k 1% | ROHM MCR03 EZP FX-1003 | R165 |
| 98470 | CR 0603 100k 1% | ROHM MCR03 EZP FX-1003 | R166 |
| 98463 | CR 0603 47k 1% | ROHM MCR03 EZP FX-4702 | R167 |
| OMIT | Utgår | | R168 |
| 98447 | CR 0603 10k 1% | ROHM MCR03 EZP FX-1002 | R169 |
| 98447 | CR 0603 10k 1% | ROHM MCR03 EZP FX-1002 | R170 |
| 98470 | CR 0603 100k 1% | ROHM MCR03 EZP FX-1003 | R171 |
| 98375 | CR 0603 10R 5% | ROHM MCR03 EZH J-10R | R172 |
| 98459 | CR 0603 33k 1% | ROHM MCR03 EZP FX-3302 | R173 |

# JOTRON electronics a.s.



## Bill Of Material

Date 16.11.2001

**Item** 99940 **Mainboard complete** **Design**

**Version** EM3727

| Item | Name / Description | Makes no. / Additional name | Sub pos. |
|---|---|---|---|
| 98423 | CR 0603 1k0 1% | ROHM MCR03 EZP FX-1001 | R174 |
| 98399 | CR 0603 100R 1% | ROHM MCR03 EZP FX-1000 | R175 |
| 98399 | CR 0603 100R 1% | ROHM MCR03 EZP FX-1000 | R176 |
| 98399 | CR 0603 100R 1% | ROHM MCR03 EZP FX-1000 | R177 |
| 98431 | CR 0603 2k2 1% | ROHM MCR03 EZP FX-2201 | R178 |
| 80017 | Switch, Side-act.TACT,h=2.3mm, Large | Huajie TSCB-3 | SW101 |
| 80016 | Switch, TACT, 6x6mm, 2.3N | ALPS SKHMPU | SW102 |
| 80016 | Switch, TACT, 6x6mm, 2.3N | ALPS SKHMPU | SW103 |
| 80016 | Switch, TACT, 6x6mm, 2.3N | ALPS SKHMPU | SW104 |
| 80016 | Switch, TACT, 6x6mm, 2.3N | ALPS SKHMPU | SW105 |
| 80016 | Switch, TACT, 6x6mm, 2.3N | ALPS SKHMPU | SW106 |
| 80016 | Switch, TACT, 6x6mm, 2.3N | ALPS SKHMPU | SW107 |
| 80016 | Switch, TACT, 6x6mm, 2.3N | ALPS SKHMPU | SW108 |
| 80016 | Switch, TACT, 6x6mm, 2.3N | ALPS SKHMPU | SW109 |
| 80016 | Switch, TACT, 6x6mm, 2.3N | ALPS SKHMPU | SW110 |
| 80066 | 3.6864 MHz Ceramic resonator | MURATA CSTCC 3.6864MHZ MG-TC | X101 |

| Revision date | Revision | Requested by | Reference |
|---|---|---|---|
| 16.11.2001 | EM3727 | A.F. | R107,C169,R178,R152-3-4,R123,R121 |
| 03.10.2001 | EM3666 | FIT | |

# JOTRON electronics a.s.



## Bill Of Material

Date 16.11.2001

**Item** 99936 **RF board complete** **Design**

**Version** EM3728

| Item | Name / Description | Makes no. / Additional name | Sub pos. |
|---|---|---|---|
| 98277 | CHIP CAP 18p 50V - 0603 | MURATA GRM39 COG 180J 50 | C001 |
| 98259 | CHIP CAP 39p 50V - 0603 | MURATA GRM39 COG 390J 50 | C002 |
| 98282 | CHIP CAP 56p 50V - 0603 | MURATA GRM39 COG 560J 50 | C003 |
| 98280 | CHIP CAP 33p 50V - 0603 | MURATA GRM39 COG 330J 50 | C004 |
| OMIT | Utgår | | C005 |
| 98300 | CHIP CAP 1n 50V - 0603 | MURATA GRM39 X7R 102K 50 | C006 |
| 98274 | CHIP CAP 10p 50V - 0603 | MURATA GRM39 COG 100D 50 | C007 |
| 97656 | INDUCTOR 10 nH | TAIYO YUDEN HK2125 10nH | C008 |
| 98280 | CHIP CAP 33p 50V - 0603 | MURATA GRM39 COG 330J 50 | C009 |
| 98515 | CHIP CAP 4p7 50V - 0603 | MURATA GRM39 4R7C 50 | C010 |
| 98281 | CHIP CAP 47p 50V - 0603 | MURATA GRM39 COG 470J 50 | C011 |
| 98287 | CHIP CAP 180p 50V - 0603 | MURATA GRM39 COG 181J 50 | C012 |
| 98281 | CHIP CAP 47p 50V - 0603 | MURATA GRM39 COG 470J 50 | C013 |
| 98518 | CHIP CAP 8p2 50V - 0603 | MURATA GRM39 COG 8R2D 50 | C014 |
| OMIT | Utgår | | C015 |
| 98284 | CHIP CAP 100p 50V - 0603 | MURATA GRM39 COG 101J 50 | C016 |
| 98284 | CHIP CAP 100p 50V - 0603 | MURATA GRM39 COG 101J 50 | C017 |
| 98281 | CHIP CAP 47p 50V - 0603 | MURATA GRM39 COG 470J 50 | C018 |
| 98275 | CHIP CAP 12p 50V - 0603 | MURATA GRM39 COG 120J 50 | C019 |
| 98518 | CHIP CAP 8p2 50V - 0603 | MURATA GRM39 COG 8R2D 50 | C020 |
| OMIT | Utgår | | C021 |
| 98279 | CHIP CAP 27p 50V - 0603 | MURATA GRM39 COG 270J 50 | C022 |
| 98322 | CHIP CAP 100n 25V - 0603 | MURATA GRM39 X7R 104Z 25 | C023 |
| 98281 | CHIP CAP 47p 50V - 0603 | MURATA GRM39 COG 470J 50 | C024 |
| OMIT | Utgår | | C025 |
| 98300 | CHIP CAP 1n 50V - 0603 | MURATA GRM39 X7R 102K 50 | C026 |
| 99396 | CHIP CAP 82p 50V - 0603 | MURATA GRM39 COG 820J 50 | C027 |
| 98322 | CHIP CAP 100n 25V - 0603 | MURATA GRM39 X7R 104Z 25 | C028 |
| 98312 | CHIP CAP 22n 25V - 0603 | MURATA GRM39 X7R 223K 25 | C029 |
| 98312 | CHIP CAP 22n 25V - 0603 | MURATA GRM39 X7R 223K 25 | C030 |
| 98284 | CHIP CAP 100p 50V - 0603 | MURATA GRM39 COG 101J 50 | C031 |
| 98310 | CHIP CAP 10n 50V - 0603 (X7R) | MURATA GRM39 X7R 103K 50 | C032 |
| 98312 | CHIP CAP 22n 25V - 0603 | MURATA GRM39 X7R 223K 25 | C033 |
| 98312 | CHIP CAP 22n 25V - 0603 | MURATA GRM39 X7R 223K 25 | C034 |
| 98322 | CHIP CAP 100n 25V - 0603 | MURATA GRM39 X7R 104Z 25 | C035 |
| 98322 | CHIP CAP 100n 25V - 0603 | MURATA GRM39 X7R 104Z 25 | C036 |
| 98278 | CHIP CAP 22p 50V - 0603 | MURATA GRM39 COG 220J 50 | C037 |
| OMIT | Utgår | | C038 |
| 98300 | CHIP CAP 1n 50V - 0603 | MURATA GRM39 X7R 102K 50 | C039 |
| 98322 | CHIP CAP 100n 25V - 0603 | MURATA GRM39 X7R 104Z 25 | C040 |
| 98300 | CHIP CAP 1n 50V - 0603 | MURATA GRM39 X7R 102K 50 | C041 |
| 98284 | CHIP CAP 100p 50V - 0603 | MURATA GRM39 COG 101J 50 | C042 |
| 98310 | CHIP CAP 10n 50V - 0603 (X7R) | MURATA GRM39 X7R 103K 50 | C043 |
| 95033 | CHIP TANTAL 1uF-B 35V | ELNA SK-1V 105 M-RB | C044 |
| 98322 | CHIP CAP 100n 25V - 0603 | MURATA GRM39 X7R 104Z 25 | C045 |

# JOTRON electronics a.s.



## Bill Of Material

Date 16.11.2001

**Item** 99936 **RF board complete** **Design**

**Version** EM3728

| Item | Name / Description | Makes no. / Additional name | Sub pos. |
|---|---|---|---|
| 98322 | CHIP CAP 100n 25V - 0603 | MURATA GRM39 X7R 104Z 25 | C046 |
| 98322 | CHIP CAP 100n 25V - 0603 | MURATA GRM39 X7R 104Z 25 | C047 |
| 98322 | CHIP CAP 100n 25V - 0603 | MURATA GRM39 X7R 104Z 25 | C048 |
| 98284 | CHIP CAP 100p 50V - 0603 | MURATA GRM39 COG 101J 50 | C049 |
| 98288 | CHIP CAP 220p 50V - 0603 | MURATA GRM39 COG 221J 50 | C050 |
| 98300 | CHIP CAP 1n 50V - 0603 | MURATA GRM39 X7R 102K 50 | C051 |
| 98322 | CHIP CAP 100n 25V - 0603 | MURATA GRM39 X7R 104Z 25 | C052 |
| 98322 | CHIP CAP 100n 25V - 0603 | MURATA GRM39 X7R 104Z 25 | C053 |
| 98322 | CHIP CAP 100n 25V - 0603 | MURATA GRM39 X7R 104Z 25 | C054 |
| 98511 | CHIP CAP 2p2 50V - 0603 | MURATA GRM39 COG 2R2C 50 | C055 |
| 98259 | CHIP CAP 39p 50V - 0603 | MURATA GRM39 COG 390J 50 | C056 |
| 98322 | CHIP CAP 100n 25V - 0603 | MURATA GRM39 X7R 104Z 25 | C057 |
| 98300 | CHIP CAP 1n 50V - 0603 | MURATA GRM39 X7R 102K 50 | C058 |
| 99657 | 1210 - 22 uF/10 V Ceramic capacitor | MURATA GRM235Y5V226Z10 | C059 |
| 98322 | CHIP CAP 100n 25V - 0603 | MURATA GRM39 X7R 104Z 25 | C060 |
| 98315 | CHIP CAP 10n 50V - 0603 (Y5V) | MURATA GRM39 Y5V 103Z 50 | C061 |
| OMIT | Utgår | | C062 |
| OMIT | Utgår | | C063 |
| 98280 | CHIP CAP 33p 50V - 0603 | MURATA GRM39 COG 330J 50 | C064 |
| 98310 | CHIP CAP 10n 50V - 0603 (X7R) | MURATA GRM39 X7R 103K 50 | C065 |
| 98300 | CHIP CAP 1n 50V - 0603 | MURATA GRM39 X7R 102K 50 | C066 |
| 98300 | CHIP CAP 1n 50V - 0603 | MURATA GRM39 X7R 102K 50 | C067 |
| 98310 | CHIP CAP 10n 50V - 0603 (X7R) | MURATA GRM39 X7R 103K 50 | C068 |
| 98310 | CHIP CAP 10n 50V - 0603 (X7R) | MURATA GRM39 X7R 103K 50 | C069 |
| OMIT | Utgår | | C070 |
| 98509 | CHIP CAP 1p5 50V - 0603 | MURATA GRM39 COG 1R5C 50 | C071 |
| 98276 | CHIP CAP 15p 50V - 0603 | MURATA GRM39 COG 150J 50 | C073 |
| 98306 | CHIP CAP 3n3 50v - 0603 | MURATA GRM39 X7R 332K 50 | C074 |
| 98703 | CR 0603 0R 1% | ROHM 0603 jump | C075 |
| 98322 | CHIP CAP 100n 25V - 0603 | MURATA GRM39 X7R 104Z 25 | C076 |
| OMIT | Utgår | | C077 |
| 98310 | CHIP CAP 10n 50V - 0603 (X7R) | MURATA GRM39 X7R 103K 50 | C078 |
| 98515 | CHIP CAP 4p7 50V - 0603 | MURATA GRM39 4R7C 50 | C079 |
| 98280 | CHIP CAP 33p 50V - 0603 | MURATA GRM39 COG 330J 50 | C080 |
| 98322 | CHIP CAP 100n 25V - 0603 | MURATA GRM39 X7R 104Z 25 | C081 |
| 98322 | CHIP CAP 100n 25V - 0603 | MURATA GRM39 X7R 104Z 25 | C082 |
| 98300 | CHIP CAP 1n 50V - 0603 | MURATA GRM39 X7R 102K 50 | C083 |
| 98265 | CHIP CAP 0.5p 50V - 0603 | MURATA GRM39 COG 0R5C 50 | C084 |
| 98300 | CHIP CAP 1n 50V - 0603 | MURATA GRM39 X7R 102K 50 | C085 |
| 99657 | 1210 - 22 uF/10 V Ceramic capacitor | MURATA GRM235Y5V226Z10 | C086 |
| 95970 | VARICAP BB134, SOD323 | PHILIPS BB134, SOD323(TAPE) | D001 |
| 95970 | VARICAP BB134, SOD323 | PHILIPS BB134, SOD323(TAPE) | D002 |
| 95970 | VARICAP BB134, SOD323 | PHILIPS BB134, SOD323(TAPE) | D003 |
| 95970 | VARICAP BB134, SOD323 | PHILIPS BB134, SOD323(TAPE) | D004 |
| 95970 | VARICAP BB134, SOD323 | PHILIPS BB134, SOD323(TAPE) | D005 |

# JOTRON electronics a.s.



## Bill Of Material

Date 16.11.2001

**Item** 99936 **RF board complete** **Design**

**Version** EM3728

| Item | Name / Description | Makes no. / Additional name | Sub pos. |
|---|---|---|---|
| 95970 | VARICAP BB134, SOD323 | PHILIPS BB134, SOD323(TAPE) | D006 |
| 80065 | Varicap diode , SMV1255 | ALPHA SMV1255-011 | D007 |
| OMIT | Utgår | | D008 |
| 95374 | PIN DIODE | XB15A709A0HR | D009 |
| 95374 | PIN DIODE | XB15A709A0HR | D010 |
| 80065 | Varicap diode , SMV1255 | ALPHA SMV1255-011 | D011 |
| 98331 | DIODE PIN BA 792 - SOD110 | PHILIPS BA792,115 | D016 |
| 98331 | DIODE PIN BA 792 - SOD110 | PHILIPS BA792,115 | D017 |
| 93107 | DUAL DIODE BAT54S | PHILIPS BAT54S,215 | D018 |
| 80003 | 450 KHz FM-Diskriminator | MURATA CDBC450CX34A | DXR001 |
| 80001 | 450 KHz MF filter | MURATA CFUCG450EX | FLT001 |
| 80001 | 450 KHz MF filter | MURATA CFUCG450EX | FLT002 |
| 93105 | FM IF | PHILIPS SA605DK,512 | IC001 |
| 80005 | SYNTH - LMX2316 | National LMX2316TMD | IC002 |
| 80007 | VHF POWER MODUL - M68731H | Mitsubishi M68731H | IC003 |
| 97690 | OP-AMP, SINGLE, SOT23-5 | National LMC7101AIM5/BIM5 | IC005 |
| 99922 | PCB conn. male | Samtec RSM-114-02-S-S | J001 |
| 99921 | PCB conn. male | Samtec TMS-122-21-G-S | J004 |
| 80049 | Chip inductor 68 nH 1812 | COILCRAFT 1812SMS-68n | L001 |
| 80049 | Chip inductor 68 nH 1812 | COILCRAFT 1812SMS-68n | L002 |
| 80049 | Chip inductor 68 nH 1812 | COILCRAFT 1812SMS-68n | L003 |
| 80049 | Chip inductor 68 nH 1812 | COILCRAFT 1812SMS-68n | L004 |
| 93184 | COIL ADJUSTABLE 100nH SMD | TOKO 432AN1052Z RULL | L005 |
| 93184 | COIL ADJUSTABLE 100nH SMD | TOKO 432AN1052Z RULL | L006 |
| 80009 | 150 nH - 0805 spole | MURATA LQN21AR15J04 | L007 |
| 93185 | COIL ADJUSTABLE 120nH SMD | TOKO 432AN1053Z RULL | L008 |
| 93185 | COIL ADJUSTABLE 120nH SMD | TOKO 432AN1053Z RULL | L009 |
| 93194 | COIL ADJUSTABLE 680nH SMD | TOKO 432AN1062Z RULL | L010 |
| OMIT | Utgår | | L011 |
| 80050 | Coil variable 47nH | TOKO E558CN-100021 | L012 |
| 93158 | DROSSEL 1.0uH SMD - 1210 | SIEMENS B82422-A1102-K100 | L013 |
| 80049 | Chip inductor 68 nH 1812 | COILCRAFT 1812SMS-68n | L014 |
| 93158 | DROSSEL 1.0uH SMD - 1210 | SIEMENS B82422-A1102-K100 | L015 |
| 93190 | COIL ADJUSTABLE 330nH SMD | TOKO 432AN1058Z RULL | L016 |
| OMIT | Utgår | | L021 |
| 80009 | 150 nH - 0805 spole | MURATA LQN21AR15J04 | L022 |
| 80010 | 220 nH - 0805 spole | MURATA LQN21AR22J04 | L023 |
| 93185 | COIL ADJUSTABLE 120nH SMD | TOKO 432AN1053Z RULL | L024 |
| 95217 | TRANSISTOR SST 310 | Siliconix SST310-T1 | M001 |
| 99913 | PCB IF / Synth , RF-modul Tron NEMO | | PCB1 |
| 99914 | PCB Front end, RF-modul Tron NEMO | | PCB2 |
| 98346 | TRANSISTOR BFG 520 - SOT143 | PHILIPS BFG520,215 | Q001 |
| 95204 | TRANSISTOR BF998 | PHILIPS BF998,215 | Q002 |
| 94448 | TRANSIST0R BFR 93A SOT-23 | PHILIPS BFR93A,215 | Q004 |
| 94443 | TRANSISTOR BC 817 SOT-23 | PHILIPS BC817,215 | Q006 |

# JOTRON electronics a.s.



## Bill Of Material

Date 16.11.2001

**Item** 99936 **RF board complete** **Design**

**Version** EM3728

| Item | Name / Description | Makes no. / Additional name | Sub pos. |
|---|---|---|---|
| OMIT | Utgår | | Q007 |
| 98346 | TRANSISTOR BFG 520 - SOT143 | PHILIPS BFG520,215 | Q008 |
| 98447 | CR 0603 10k 1% | ROHM MCR03 EZP FX-1002 | R001 |
| 98387 | CR 0603 33R 5% | ROHM MCR03 EZH J-33R | R002 |
| 98427 | CR 0603 1k5 1% | ROHM MCR03 EZP FX-1501 | R003 |
| 98445 | CR 0603 8k2 1% | ROHM MCR03 EZP FX-8201 | R004 |
| 98399 | CR 0603 100R 1% | ROHM MCR03 EZP FX-1000 | R005 |
| 98447 | CR 0603 10k 1% | ROHM MCR03 EZP FX-1002 | R006 |
| 98461 | CR 0603 39k 1% | ROHM MCR03 EZP FX-3902 | R007 |
| 98399 | CR 0603 100R 1% | ROHM MCR03 EZP FX-1000 | R008 |
| 98447 | CR 0603 10k 1% | ROHM MCR03 EZP FX-1002 | R009 |
| 98447 | CR 0603 10k 1% | ROHM MCR03 EZP FX-1002 | R010 |
| 98425 | CR 0603 1k2 1% | ROHM MCR03 EZP FX-1201 | R011 |
| 98379 | CR 0603 15R 5% | ROHM MCR03 EZH J-15R | R012 |
| 98411 | CR 0603 330R 1% | ROHM MCR03 EZP FX-3300 | R013 |
| 98455 | CR 0603 22k 1% | ROHM MCR03 EZP FX-2202 | R014 |
| 98447 | CR 0603 10k 1% | ROHM MCR03 EZP FX-1002 | R015 |
| 98455 | CR 0603 22k 1% | ROHM MCR03 EZP FX-2202 | R016 |
| 98387 | CR 0603 33R 5% | ROHM MCR03 EZH J-33R | R017 |
| 98387 | CR 0603 33R 5% | ROHM MCR03 EZH J-33R | R018 |
| 98379 | CR 0603 15R 5% | ROHM MCR03 EZH J-15R | R019 |
| 98411 | CR 0603 330R 1% | ROHM MCR03 EZP FX-3300 | R020 |
| 98465 | CR 0603 56k 1% | ROHM MCR03 EZP FX-5602 | R021 |
| 98470 | CR 0603 100k 1% | ROHM MCR03 EZP FX-1003 | R022 |
| 98463 | CR 0603 47k 1% | ROHM MCR03 EZP FX-4702 | R023 |
| 98427 | CR 0603 1k5 1% | ROHM MCR03 EZP FX-1501 | R024 |
| 98383 | CR 0603 22R 5% | ROHM MCR03 EZH J-22R | R025 |
| 98375 | CR 0603 10R 5% | ROHM MCR03 EZH J-10R | R026 |
| 98429 | CR 0603 1k8 1% | ROHM MCR03 EZP FX-1801 | R027 |
| 98375 | CR 0603 10R 5% | ROHM MCR03 EZH J-10R | R029 |
| 98399 | CR 0603 100R 1% | ROHM MCR03 EZP FX-1000 | R030 |
| OMIT | Utgår | | R031 |
| 98423 | CR 0603 1k0 1% | ROHM MCR03 EZP FX-1001 | R032 |
| 98375 | CR 0603 10R 5% | ROHM MCR03 EZH J-10R | R034 |
| 98375 | CR 0603 10R 5% | ROHM MCR03 EZH J-10R | R035 |
| 98403 | CR 0603 150R 1% | ROHM MCR03 EZP FX-1500 | R036 |
| 98411 | CR 0603 330R 1% | ROHM MCR03 EZP FX-3300 | R037 |
| 98439 | CR 0603 4K7 1% | ROHM MCR03 EZP FX-4701 | R038 |
| 98439 | CR 0603 4K7 1% | ROHM MCR03 EZP FX-4701 | R039 |
| 98375 | CR 0603 10R 5% | ROHM MCR03 EZH J-10R | R040 |
| 98399 | CR 0603 100R 1% | ROHM MCR03 EZP FX-1000 | R041 |
| 98425 | CR 0603 1k2 1% | ROHM MCR03 EZP FX-1201 | R042 |
| 98425 | CR 0603 1k2 1% | ROHM MCR03 EZP FX-1201 | R043 |
| 98425 | CR 0603 1k2 1% | ROHM MCR03 EZP FX-1201 | R044 |
| 98455 | CR 0603 22k 1% | ROHM MCR03 EZP FX-2202 | R045 |

# JOTRON electronics a.s.



## Bill Of Material

Date 16.11.2001

**Item** 99936 **RF board complete** **Design**

**Version** EM3728

| Item | Name / Description | Makes no. / Additional name | Sub pos. |
|---|---|---|---|
| 98401 | CR 0603 120R 1% | ROHM MCR03 EZP FX-1200 | R046 |
| 98455 | CR 0603 22k 1% | ROHM MCR03 EZP FX-2202 | R048 |
| 98379 | CR 0603 15R 5% | ROHM MCR03 EZH J-15R | R049 |
| 98423 | CR 0603 1k0 1% | ROHM MCR03 EZP FX-1001 | R051 |
| OMIT | Utgår | | R053 |
| OMIT | Utgår | | R054 |
| OMIT | Utgår | | R055 |
| 98399 | CR 0603 100R 1% | ROHM MCR03 EZP FX-1000 | R056 |
| 98449 | CR 0603 12k 1% | ROHM MCR03 EZP FX-1202 | R057 |
| 98375 | CR 0603 10R 5% | ROHM MCR03 EZH J-10R | R058 |
| 98430 | CR 0603 2k0 1% | ROHM MCR03 EZP FX-2001 | R059 |
| 98430 | CR 0603 2k0 1% | ROHM MCR03 EZP FX-2001 | R060 |
| 98430 | CR 0603 2k0 1% | ROHM MCR03 EZP FX-2001 | R061 |
| 98430 | CR 0603 2k0 1% | ROHM MCR03 EZP FX-2001 | R062 |
| 98419 | CR 0603 680R 1% | ROHM MCR03 EZP FX-6800 | R065 |
| 98703 | CR 0603 0R 1% | ROHM 0603 jump | R066 |
| OMIT | Utgår | | R068 |
| OMIT | Utgår | | R069 |
| OMIT | Utgår | | R070 |
| TP | Test Point | | US020 |
| 80064 | X-Tall 20.9500 MHz | SMI 20.9500MHz 94SMX(B) | X001 |
| 80051 | 21.4 MHz MF Filter SMD - U5SM | MEC 21M15B U5SM | Y1,Y2 |

| Revision date | Revision | Requested by | Reference |
|---|---|---|---|
| 16.11.2001 | EM3728 | A.F. | Se vedlegg. |
| 08.11.2001 | EM3699 | A.F. | Pos. C008 |
| 30.10.2001 | EM3688 | A.F. | Pos.L21, Q7, C62 |
| 18.10.2001 | EM3681 | A.F. | Pos.C008,C007,C014,C003 |

# JOTRON electronics a.s.

## Bill Of Material

**Date 14.12.2001**

**Item** **80060** **LITHIUM BATTERY FOR Tron TR20** **Manufacturing Version**

| Item | Name / Description | Makes no. / Additional name | Sub pos. |
|---|---|---|---|
| 80046 | Lithium batteripakke, TR-20 | 6xL91 Energizer | 1 |
| 80057 | Innvendig batteri etikett, Litium bat. | Facal 805, Orange/Sort txt | 2 |
| 99884 | PCB BATTERIKORT Rev.0143 | TR-20 | 3 |
| 99882 | BATTERIDEKSEL - YTRE | Lexan 503R Orange (6312 12,75) | 4 |
| 99881 | BATTERIDEKSEL - INDRE | Lexan 123R Transparent | 5 |
| 80086 | Label, "Remove seal before use" | | 6 |
| 80054 | Label operation, TR-20 GMDSS | Orange hard plast/Sort txt | 7 |

# JOTRON electronics a.s.

## Bill Of Material

**Date 14.12.2001**

**Item** **80059** **BATTERY NiMH FOR Tron TR20** **Manufacturing Version**

| Item | Name / Description | Makes no. / Additional name | Sub pos. |
|---|---|---|---|
| 80047 | NiMH batteripakke, TR-20 | | 1 |
| 80056 | Innvendig batteri etikett, NiMH batteri | Fascal 805, Orange/Sort txt | 2 |
| 99884 | PCB BATTERIKORT Rev.0143 | TR-20 | 3 |
| 80039 | BATTERIDEKSEL - YTRE, GRÅ | Lexan 503R Grå | 4 |
| 99881 | BATTERIDEKSEL - INDRE | Lexan 123R Transparent | 5 |
| 80088 | Label operation, TR-20 PLUS | Mørk grå hard plast/Hvit tekst | 6 |

# 9. Appendix A

The IR serial interface is for factory use only. It enables a computer to control the TR20 via the Jotron PRU-40 infrared interface.

Serial interface commands (IR)

| Function | Read | Write | Response | Comment |
|---|---|---|---|---|
| Volume | $vo | | $vo,100 | Value 0-255 |
| | | $vo,125 | $vo,125 | |
| | | | | |
| Squelch | $sq | | $sq,65 | Value 0-255 |
| | | $sq,80 | $sq,80 | |
| | | | | |
| Reference ofset | $re | | $re,0 | Value -127 til 127 |
| | | $re,-6 | $re,-6 | |
| | | | | |
| Modulation offset | $mo | | $mo,1 | Value -127 til 127 |
| | | $mo,3 | $mo,3 | |
| | | | | |
| Output power, Low | $pl | | $pl,120 | Value 0-255 |
| | | $pl,123 | $pl,123 | |
| | | | | |
| Output power, High | $ph | | $ph,127 | Value 0-255 |
| | | $ph,150 | $ph,150 | |
| | | | | |
| Set High/low power | $po | | $po,1 | 1 = High power<br>0 = Low power |
| | | $po,0 | $po,0 | |
| | | | | |
| Frequency | $fr | | $fr,156.375 | |
| | | $fr,156.425 | $fr,156.425 | |
| | | | | |
| Channel | $ch | | $ch,68 | |
| | | $ch,67 | $ch,67 | |
| | | | | |
| HW/SW version | $id | | $id,114aa | 114 is SW version<br>aa is HW version |
| | | $id,115aa | $id,115aa | |
| | | | | |
| Serial number | $no | | $no,00002 | 5 digit serialnumber |
| | | $no,00003 | $no,00003 | |
| | | | | |
| Key On/Off | $ke | | $ke,0 | 0 = Rx<br>1 = Tx |
| | | $ke,1 | $ke,1 | |
| | | | | |