Report No: DDT-R15Q0407-1R1

Issued Date: Apr.27,2015

FCC CERTIFICATION TEST REPORT

FOR

Applicant	:	Giant Telecom Ltd.
Address	:	26/F., Rykadan Capital Tower, 135 Hoi Bun Road, Kwun Tong, Kowloon, Hong Kong.
Equipment under Test	:	Two-way radio
Model No	:	MG160A, MG163A, MG163TPA, MG167A, MG160TPA
Trade Mark	:	/
FCC ID	:	RAQMGAFJE
Manufacturer	:	DONGGUAN WISETRONICS TELECOM EQUIPMENT CO.,LTD.
Address	:	Elite Industrial City, Meilin District, Daling Shan Town, Dongguan Guangdong, PRC

Issued By: Dongguan Dongdian Testing Service Co., Ltd.

Add: No. 17, Zongbu Road 2, Songshan Lake Sci&Tech, Industry Park, Dongguan City, Guangdong Province, China, 523808

Tel: +86-0769-22891499 Http://www.dgddt.com

REPORT

TABLE OF CONTENTS

Test report declares....4
1. Summary of test results....5
2. General test information....6
2.1. Description of EUT....6
2.2. Accessories of EUT....6
2.3. Channel Information....6
2.4. Block diagram of EUT configuration for test....6
2.5. Test environment conditions....7
2.6. Test laboratory....7
2.7. Measurement uncertainty....7
3. Maximum Transmitter Power....8
3.1. Test equipment....8
3.2. Block diagram of test setup....8
3.3. Limits....8
3.4. Test Procedure....9
3.5. Test Result....10
4. Occupied bandwidth and emission mask....11
4.1. Test equipment....11
4.2. Block diagram of test setup....11
4.3. Limits....11
4.4. Test Procedure....11
4.5. Test Result....12
4.6. Original test data....13
5. Modulation Characteristics....15
5.1. Test equipment....15
5.2. Block diagram of test setup....15
5.3. Limits....16
5.4. Test Procedure....16
5.5. Test Result....17
6. Radiated Spurious Emission....21
6.1. Test equipment....21
6.2. Block diagram of test setup....21
6.3. Limit....22
6.4. Test Procedure....22
6.5. Test result....23
7. Frequency Stability....24

7.1. Test equipment 24
7.2. Block diagram of test setup 24
7.3. Limits 24
7.4. Test Procedure 24
7.5. Test result 25
8. Test setup photograph 28
9. Photos of the EUT 30

TEST REPORT DECLARE

Applicant	:	Giant Telecom Ltd.
Address	:	26/F., Rykadan Capital Tower, 135 Hoi Bun Road, Kwun Tong, Kowloon, Hong Kong.
Equipment under Test	:	Two-way radio
Model No	:	MG160A, MG163A, MG163TPA, MG167A, MG160TPA
Trade Mark	:	/
FCC ID	:	RAQMGAFJE
Manufacturer	:	DONGGUAN WISETRONICS TELECOM EQUIPMENT CO.,LTD.
Address	:	Elite Industrial City, Meilin District, Daling Shan Town, Dongguan Guangdong, PRC

Test Standard Used: FCC Rules and Regulations Part 95; FCC Rules and Regulations Part 2; FCC Rules and Regulations Part 15B;

Test procedure used: TIA-603-D:2010; ANSI C63.4:2009

We Declare:

The equipment described above is tested by Dongguan Dongdian Testing Service Co., Ltd and in the configuration tested the equipment complied with the standards specified above. The test results are contained in this test report and Dongguan Dongdian Testing Service Co., Ltd is assumed of full responsibility for the accuracy and completeness of these tests.

After test and evaluation, our opinion is that the equipment provided for test compliance with the requirement of the above FCC standards.

Report No:	DDT-R15Q0407-1R1		
Date of Test:	Apr.15,2015---Aprr.22,2015	**Date of Report**:	Apr. 27,2015

Prepared By: ***Approved By:***

Leo Liu/RF Engineer ***Kevin Feng/RF Manager***

Note: This report applies to above tested sample only. This report shall not be reproduced in parts without written approval of Dongguan Dongdian Testing Service Co., Ltd.

1. Summary of test results

Description of Test Item	Standard	Results
Maximum Transmitter Power	**FCC Part 95.639**	**PASS**
Modulation Characteristics	**FCC Part 2.1047, FCC Part 95.637**	**PASS**
Occupied Bandwidth and Emission Mask	**FCC Part 2.1049, FCC Part 95.633, FCC Part 95.635**	**PASS**
Radiated Spurious Emission	**FCC Part 95.635**	**PASS**
Frequency Stability	**FCC Part 2.1055, FCC Part 95.621 FCC Part 95.626**	**PASS**

2. General test information

2.1. Description of EUT

EUT* Name	:	Two-way radio
Model Number	:	MG160A, MG163A, MG163TPA, MG167A, MG160TPA
Difference of model number	:	This device have 6 models, and the difference of each models are cabinet color and package, all the other characteristic like circuit, PCB layoutare, RF power are exactly same.
Trade Mark	:	/
EUT function description	:	Please reference user manual of this device
Power supply	:	DC 4.2V AAA Alkaline battery
Operation frequency range	:	462.55MHz-462.7250MHz / 467.5625MHz-467.7125MHz
Modulation type	:	FM
Max Tx deviation	:	2.5KHz
Emission type	:	F3E
Antenna Type	:	Integral
Date of Receipt	:	Apr.13,2015
Sample Type	:	Series production

Note1: EUT is the ab. of equipment under test.

2.2. Accessories of EUT

N/A

2.3. Channel Information

CH #	FREQ (MHz)	TYPE	CH #	FREQ (MHz)	TYPE
1	462.5625	GMRS	12	467.6625	FRS
2	462.5875	GMRS	13	467.6875	FRS
3	462.6125	GMRS	14	467.7125	FRS
4	462.6375	GMRS	15	462.55	GMRS
5	462.6625	GMRS	16	462.575	GMRS
6	462.6875	GMRS	17	462.6	GMRS
7	462.7125	GMRS	18	462.625	GMRS
8	467.5625	FRS	19	462.65	GMRS
9	467.5875	FRS	20	462.675	GMRS
10	467.6125	FRS	21	462.7	GMRS
11	467.6375	FRS	22	462.725	GMRS

2.4. Block diagram of EUT configuration for test

For Radiated emissions test, the block diagram of EUT configuration as blowe:

EUT

2.5. Test environment conditions

Unless otherwise specified, measurments were performed within below environmental conditions

Temperature range:	21-25℃
Humidity range:	40-75%
Pressure range:	86-106kPa

2.6. Test laboratory

Dongguan Dongdian Testing Service Co., Ltd

Add: No. 17, Zongbu Road 2, Songshan Lake Sci&Tech, Industry Park, Dongguan City, Guangdong Province, China, 523808 Tel: +86-0769-22891499 http://www.dgddt.com

FCC Registration Number: 270092 Industry Canada site registration number: 10288A

2.7. Measurement uncertainty

Test Item	Uncertainty
Maximum RF output power (Radiated)	±1.5dB
Frequency Deviation	±0.05KHz
Uncertainty for radio frequency	1×10^{-9}
Frequency stability	140Hz
Temperature	±0.2℃
Humidity	±1%
DC and Low frequency voltage	±0.5%
Uncertainty for radiation emission test (30MHz-1GHz)	3.14 dB (Polarize: V)
	3.16 dB (Polarize: H)
Uncertainty for radiation emission test (1GHz to 25GHz)	2.08dB(Polarize: V)
	2.56dB (Polarize: H)
Uncertainty for radiation emission test (150KHz-30MHz)	3.21dB

Note：This uncertainty represents an expanded uncertainty expressed at approximately the 95% confidence level using a coverage factor of k=2.

3. Maximum Transmitter Power

3.1. Test equipment

Item	Equipment	Manufacturer	Model No.	Serial No.	Last Cal.	Cal. Interval
1	Spectrum analyzer	R&S	FSU26	1166.1660.26	2014/10/25	1Y
2	Trilog Broadband Antenna	Schwarzbeck	VULB9163	9163-462	2015/04/12	1Y
3	Dipole antenna	Schwarzbeck	UHAP	1101	2014/10/25	1Y
4	Dipole antenna	Schwarzbeck	VHAP	1118	2014/10/25	1Y
5	RF Cable	R&S	R01	10403	2014/10/25	1Y
6	RF Cable	R&S	R02	10512	2014/10/25	1Y
7	RF Cable	R&S	R01	10454	2014/10/25	1Y
8	RF Cable	R&S	R02	10343	2014/10/25	1Y
9	Signal Generator	R&S	SMBV100A	1407.6004K02	2014/10/25	1Y
10	Test software	Audix	E3	34224543	/	/

3.2. Block diagram of test setup

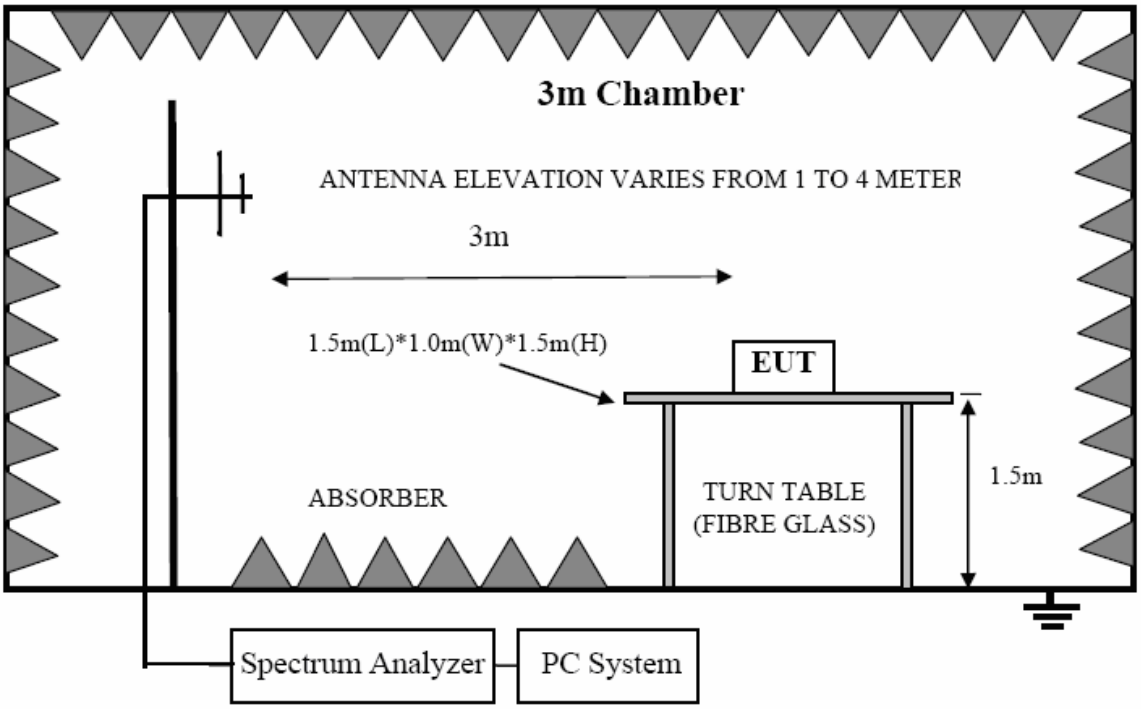

3.3. Limits

According to FCC Part 95.639:.

No FRS unit, under any condition of modulation, shall exceed 0.500 W effective radiated power (ERP)

No GMRS channel, under any condition of modulation, shall exceed:

(1) 50W Carrier power (average TP during one modulated RF cycle) when transmitting emissions type A1D, F1D, G1D, A3E, F3E, or G3E.

(2) 50W peak envelope TP when transmitting emission type H1D, J1D, R1D, H3E, J3E or R3E.

According to RSS-210 A6.1.4:

For FRS transmitter the maximum permissible transmitter output power under any operating conditions is 0.5 W effective radiated power (e.r.p.). The radio shall be equipped with an integral antenna.

According to RSS-210 A6.2.4:

A GMRS transmitter may transmit with a maximum power of 2 W e.r.p.

3.4. Test Procedure

(1) On a test site, the EUT shall be placed at 1.5m height on a wooden turntable, and in the position closest to normal use as declared by the applicant.

(2) The test antenna shall be oriented initially for vertical polarization located 3m from EUT to correspond to the frequency of the transmitter.

(3) The output of the test antenna shall be connected to the measuring receiver and the peak detector is used for the measurement.

(4) The transmitter shall be switched on , if possible, without modulation and the measuring receiver shall be tuned to the frequency of the transmitter under test.

(5) The test antenna shall be raised and lowered through the specified range of height until a maximum signal level is detected by the measuring receiver.

(6) The transmitter shall then the rotated through 360° in the horizontal plane, until a maximum signal level is detected by the measuring receiver.

(7) The test antenna shall be raised and lowered through the specified range of height until a maximum signal level is detected by the measuring receiver.

(8) The maximum signal level detected by the measuring receiver shall be noted.

(9) The transmitter shall be replaced by a tuned dipole (substitution antenna).

(10) The substitution antenna shall be oriented for vertical polarization and the length of the substitution antenna shall be adjusted to correspond to the frequency of the transmitter.

(11) The substitution antenna shall be connected to a calibrated signal generator.

(12) If necessary , the input attenuator setting of the measuring receiver shall be adjusted in order to increase the sensitivity of the measuring receiver.

(13) The test antenna shall be raised and lowered through the specified range of height until a maximum signal level is detected by the measuring receiver

(14) The input signal to the substitution antenna shall be adjusted to the level that produces a level detected by the measuring received, that is equal to the level noted while the transmitter radiated power was measured, corrected for the change of input attenuator setting of the measuring receiver.

(15) The input signal to the substitution antenna shall be recorded as power level in dBm, corrected for any change of input attenuator setting of the measuring receiver.

(16) The measurement shall be repeated with the test antenna and the substitution antenna orientated for horizontal polarization.

(17) The measure of the ERP is the larger of the two levels recorded, at the input to the substitution antenna, corrected the gain of the substitution antenna if necessary.

3.5. Test Result

CH #	Frequency	Type	Result(ERP)		FCC Limit	FCC Margin	RSS-210 Limit	RSS-210 Margin
	(MHz)		dBm	(W)	(W)	(W)	(W)	(W)
1	462.5625	GMRS	26.67	0.465	50	49.535	2	1.535
2	462.5875	GMRS	26.64	0.461	50	49.539	2	1.539
3	462.6125	GMRS	26.66	0.463	50	49.537	2	1.537
4	462.6375	GMRS	26.61	0.458	50	49.542	2	1.542
5	462.6625	GMRS	26.62	0.459	50	49.541	2	1.541
6	462.6875	GMRS	26.57	0.454	50	49.546	2	1.546
7	462.7125	GMRS	26.53	0.450	50	49.550	2	1.550
8	467.5625	FRS	26.56	0.453	0.5	0.047	0.5	0.047
9	467.5875	FRS	26.57	0.454	0.5	0.046	0.5	0.046
10	467.6125	FRS	26.59	0.456	0.5	0.044	0.5	0.044
11	467.6375	FRS	26.61	0.458	0.5	0.042	0.5	0.042
12	467.6625	FRS	26.56	0.453	0.5	0.047	0.5	0.047
13	467.6875	FRS	26.59	0.456	0.5	0.044	0.5	0.044
14	467.7125	FRS	26.62	0.459	0.5	0.041	0.5	0.041
15	462.55	GMRS	26.47	0.444	50	49.556	2	1.556
16	462.575	GMRS	26.51	0.448	50	49.552	2	1.552
17	462.6	GMRS	26.48	0.445	50	49.555	2	1.555
18	462.625	GMRS	26.42	0.439	50	49.561	2	1.561
19	462.65	GMRS	26.43	0.440	50	49.560	2	1.560
20	462.675	GMRS	26.38	0.435	50	49.565	2	1.565
21	462.7	GMRS	26.39	0.436	50	49.564	2	1.564
22	462.725	GMRS	26.40	0.437	50	49.563	2	1.563
Conclusion:PASS								
Test Date : Apr.15,2015						Test Engineer : Leo Liu		

4. Occupied bandwidth and emission mask

4.1. Test equipment

Item	Equipment	Manufacturer	Model No.	Serial No.	Last Cal.	Cal. Interval
1	Spectrum analyzer	R&S	FSU	1166.1660.26	2014/10/25	1 Year
2	Attenuator	Mini-Circuits	BW-S20W2	101109	2014/10/25	1 Year
3	RF Cable	Micable	C10-01-01-1	100309	2014/10/25	1 Year
4	Audio Generator	Good Will Instrument	GAG-810	EM862120	2014/10/25	1 Year
5	Digit Multimeter	Agilent	34401A	MY47053313	2014/10/25	1 Year

4.2. Block diagram of test setup

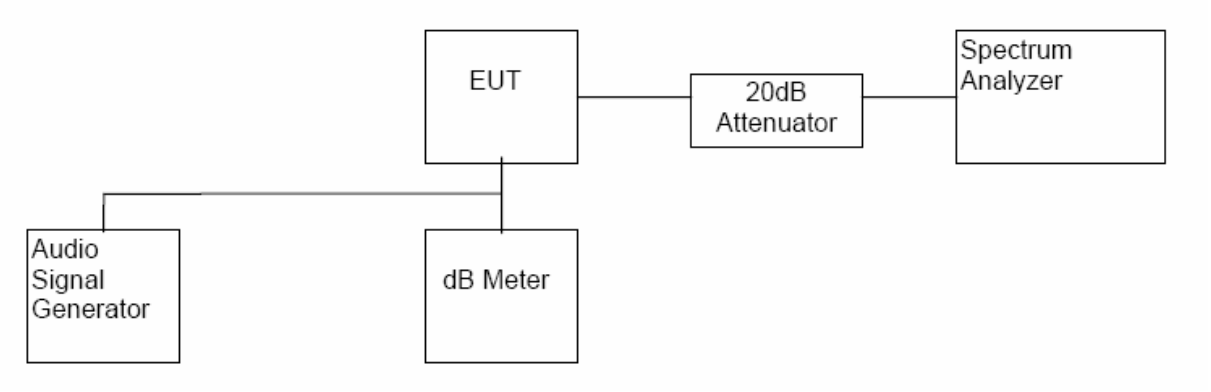

4.3. Limits

According to FCC 95.633 & RSS-210 A6.1.3, A6.2.3:

For GMRS: the authorized bandwidth for emission type A1D or A3E is 8 KHz ,The authorized bandwidth for emission type F1D, G1D, F3E or G3E is 20 KHz.

For FRS: the authorized bandwidth for emission type F3E or F2D is 12.5 KHz

According to FCC 95.635 & RSS-210 A6.1.5, A6.2.5:

At least 25dB (decibels) on any frequency removed from the center of the authorized bandwidth by more than 50 % up to and including 100 % of the authorized bandwidth.

At least 35 dB on any frequency removed from the center of the authorized bandwidth by more than 100 % up to and including 250 % of the authorized bandwidth.

At least 43 + 10 log10(T) dB on any frequency removed from the center of the authorized bandwidth by more than 250 %.

4.4. Test Procedure

(1). Configure EUT and assistant system according clause 4.2

(2). The EUT was modulated by 2.5 KHz Sine wave audio signal, The level of the audio signal employed is 16 dB greater than that necessary to produce 50% of rated system deviation. Rated system deviation is 2.5 kHz (12.5 kHz channel spacing).

(3). Set SPA Center Frequency = fundamental frequency, RBW=VBW= 300 Hz, Span =20 KHz.

(4). Measure the -20 dB bandwidth of modulated signal.

4.5. Test Result

Occupied Bandwidth:

CH	Freq (MHz)	Type	Occupied Bandwidth	Limit
CH4	462.6375	GMRS	5.69KHz	20KHz
CH11	467.6375	FRS	5.69KHz	12.5KHz
Conclusion:PASS				
Test Date : Apr.15,2015			Test Engineer : Leo Liu	

Emission mask:

CH	Freq (MHz)	Type	Emission mask result
CH4	462.6375	GMRS	PASS
CH11	467.6375	FRS	PASS
Test Date : Apr.15,2015		Test Engineer : Leo Liu	

4.6. Original test data

Occupied Bandwidth CH4:

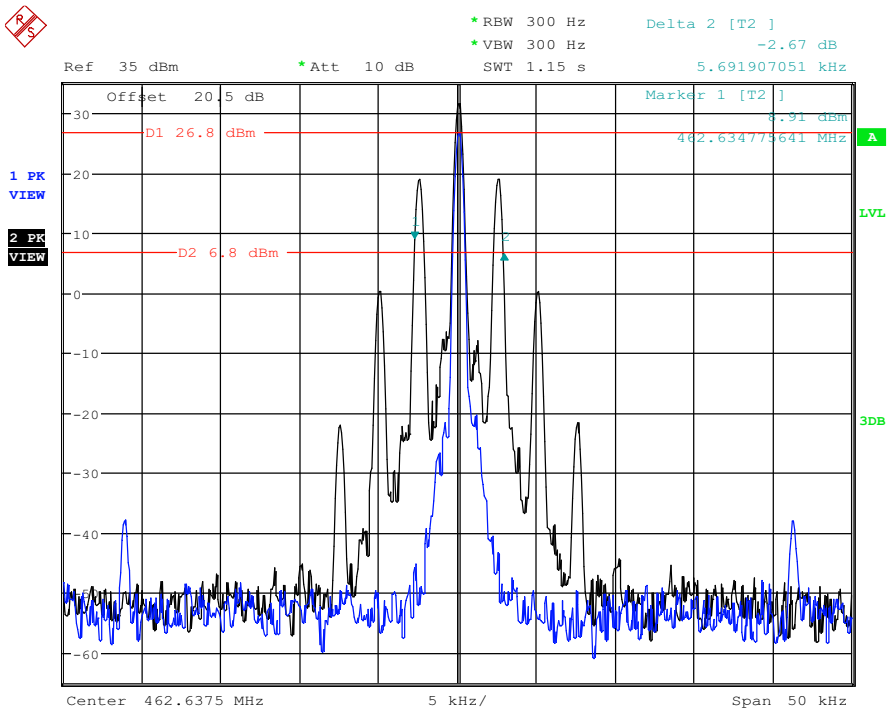

Occupied Bandwidth CH11:

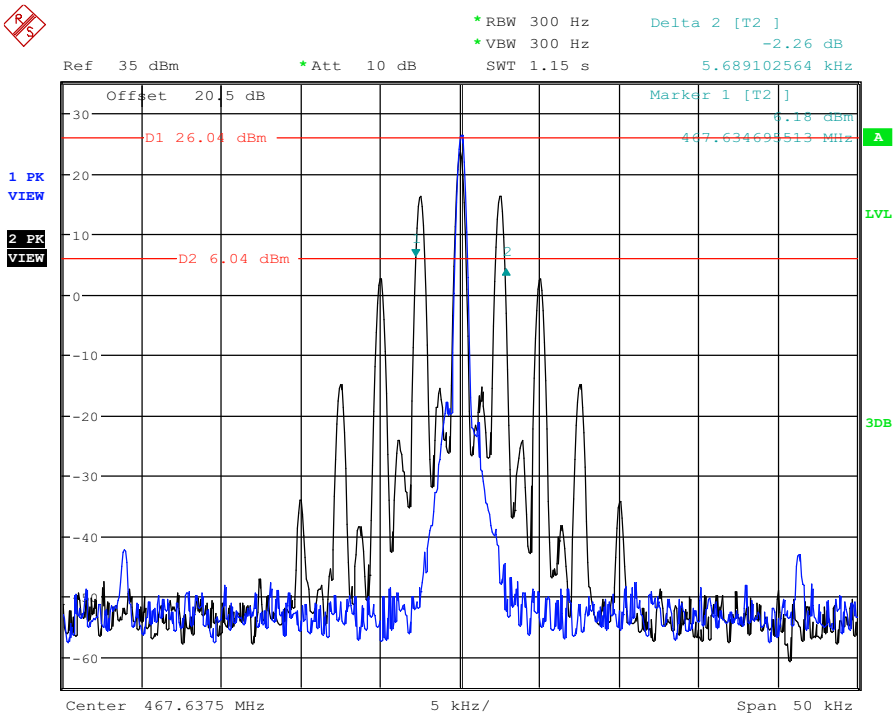

Emission mask CH 4

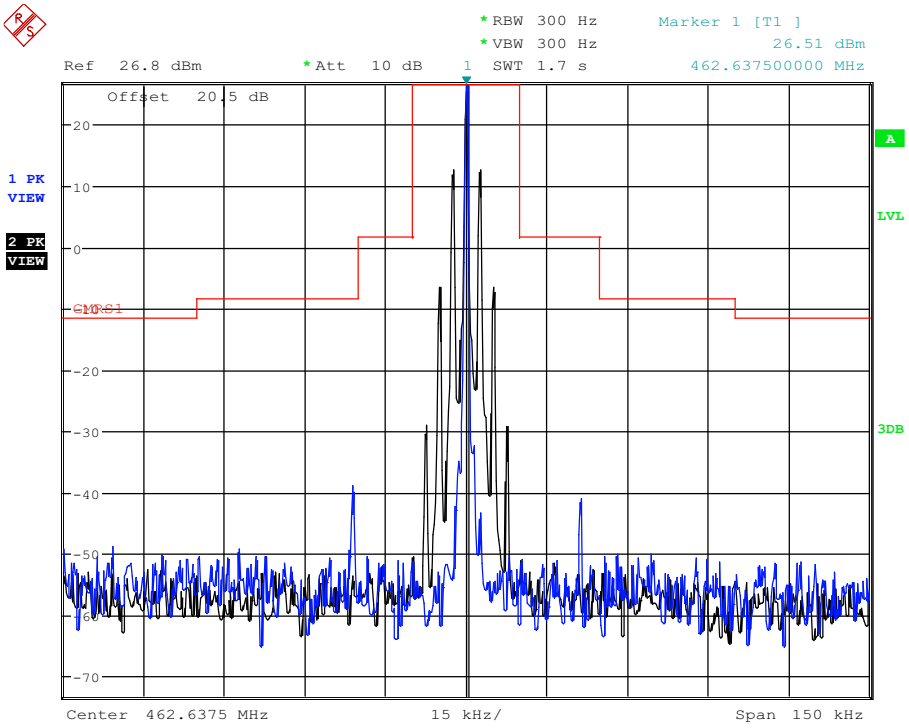

Emission mask CH11

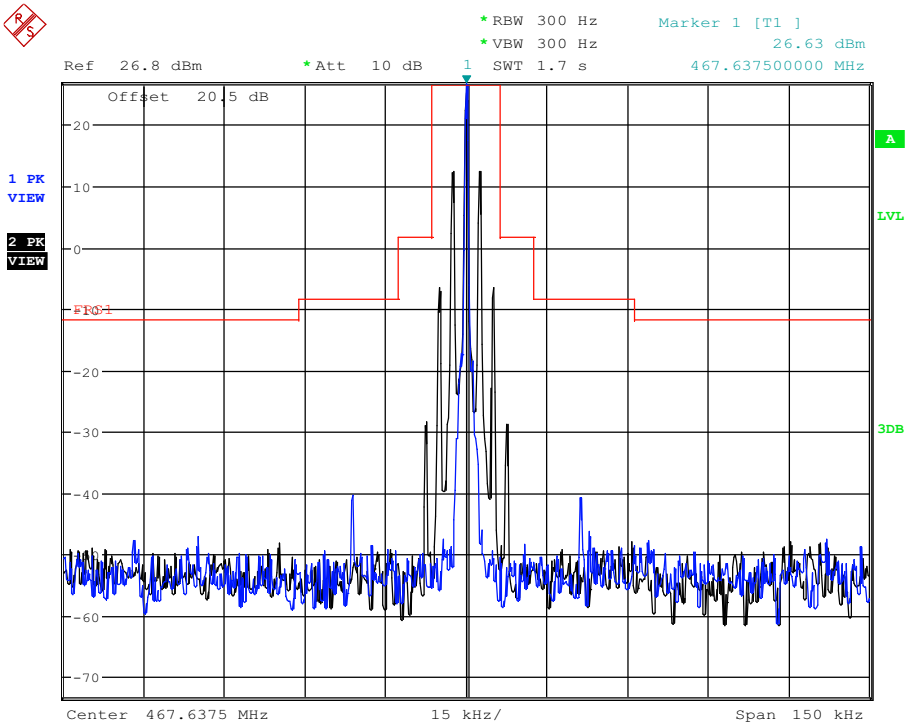

5. Modulation Characteristics

5.1. Test equipment

Item	Equipment	Manufacturer	Model No.	Serial No.	Last Cal.	Cal. Interval
1	Spectrum analyzer	R&S	FSU	1166.1660.26	2014/10/25	1 Year
2	Attenuator	Mini-Circuits	BW-S20W2	101109	2014/10/25	1 Year
3	RF Cable	Micable	C10-01-01-1	100309	2014/10/25	1 Year
4	Audio Generator	Good Will Instrument	GAG-810	EM862120	2014/10/25	1 Year
5	Digit Multimeter	Agilent	34401A	MY47053313	2014/10/25	1 Year
6	RF COMMUNICATION TEST SET	HP	8920A	3813A1016	2014/10/25	1 Year

5.2. Block diagram of test setup

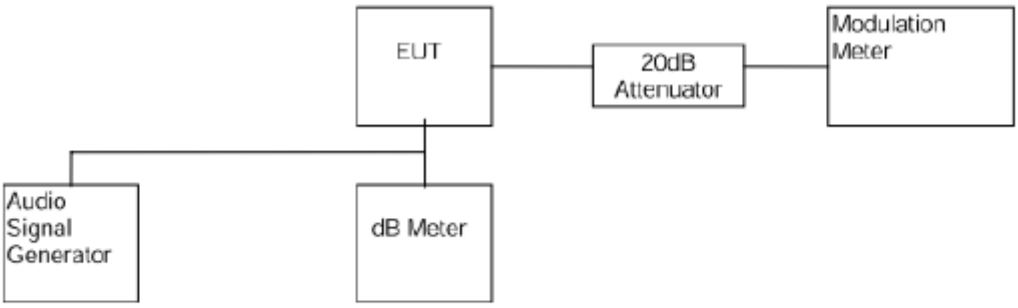

Figure 1

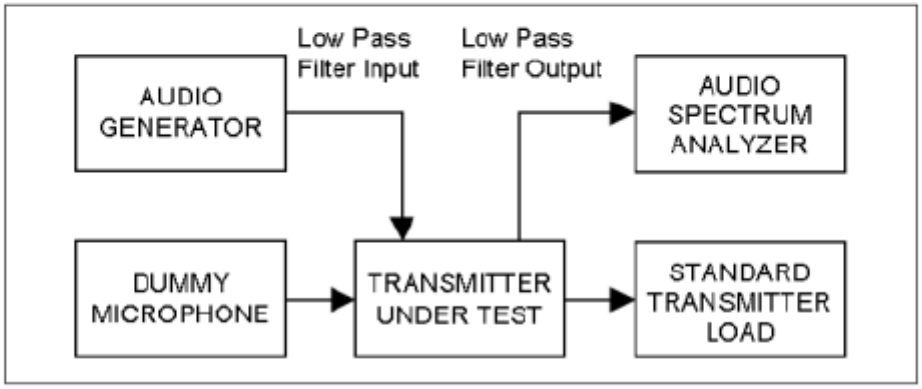

Figure 2

5.3. Limits

According to FCC 95.637:

(a) A GMRS transmitter that transmits emission types F1D, G1D, or G3E must not exceed a peak frequency deviation of plus or minus 5 kHz. A GMRS transmitter that transmits emission type F3E must not exceed a peak frequency deviation of plus or minus 5 kHz. A FRS unit that transmits emission type F3E must not exceed a peak frequency deviation of plus or minus 2.5 kHz, and the audio frequency response must not exceed 3.125 kHz .

(b) Each GMRS transmitter, except a mobile station transmitter with a power output of 2.5 W or less, must automatically prevent a greater than normal audio level from causing overmodulation. The transmitter also must include audio frequency low pass filtering, unless it complies with the applicable paragraphs of §95.631 (without filtering.) The filter must be between the modulation limiter and the modulated stage of the transmitter. At any frequency (f in kHz) between 3 and 20 kHz, the filter must have an attenuation of at least 60 log10 (f/3) dB greater than the attenuation at 1 kHz. Above 20 kHz, it must have an attenuation of at least 50 dB greater than the attenuation at 1 kHz.

According to FCC 2.1047:

(a) Voice modulated communication equipment. A curve or equivalent data showing the frequency response of the audio modulating circuit over a range of 100 to 5000 Hz shall be submitted.

For equipment required to have an audio low-pass filter, a curve showing the frequency response of the filter, or of all circuitry installed between the modulation limiter and the modulated stage shall be submitted.

(b) Equipment which employs modulation limiting. A curve or family of curves showing the percentage of modulation versus the modulation input voltage shall be supplied. The information submitted shall be sufficient to show modulation limiting capability throughout the range of modulating frequencies and input modulating signal levels employed.

5.4. Test Procedure

Frequency deviation:

(1). Configure the EUT as shown in figure 1, adjust the audio input for 60% of rated system deviation at 1 KHz using this level as a reference (0dB) and vary the input level from –20 to +20dB. Record the frequency deviation obtained as a function of the input level.

(2). Repeat step (1) with input frequency changing to 300Hz,500Hz,1Kz, 1.5KHz, 2KHz and 3KHz in sequence.

Audio Frequency Response:

(1). Configure the EUT as shown in figure 1.

(2). Apply a 1000 Hz tone and adjust the audio frequency generator to produce 20% of the rated system deviation.

(3). Vary the Audio frequency from 100 Hz to 5 KHz and record the frequency deviation.

(4). The peak frequency deviation must not exceed ±2.5KHz.

Audio Low Pass Filter Response:

(1) Connect the equipment in figure 2.

(2) Connect the audio frequency generator as close as possible the input of the post limiter low pass filter within the transmitter under test.

(3) Connect the audio spectrum analyzer to the output of the post limiter low pass filter within the transmitter under test.

(4) Apply a 1000 Hz tone from the audio frequency generator and adjust the level per manufacturer's specifications.

(5) Record the dB level of the 1000 Hz spectral line on the audio spectrum analyzer as LEV1 .

(6) Set the audio frequency generator to the desired test frequency between 3000 Hz and the upper low pass filter limit.

(7) Record audio spectrum analyzer levels, at the test frequency in step (6).

(8) Record the dB level on the audio spectrum analyzer as LEV2 . Method of Measurement for Transmitters .

5.5. Test Result

Frequency deviation:

Channel 4: 462.6375MHz, GMRS								
Modulation Input(dB)	Peak Frequency Deviation (KHz)							Limit (KHz)
	300Hz	500Hz	1KHz	1.5KHz	2KHz	2.5KHz	3KHz	
-20	0.32	0.35	0.41	0.45	0.47	0.49	0.52	2.5
-15	0.43	0.44	0.47	0.48	0.49	0.51	0.55	2.5
-10	0.45	0.52	0.54	0.57	0.58	0.63	0.64	2.5
-5	0.67	0.75	0.81	0.82	0.86	0.88	0.91	2.5
0	1.05	1.16	1.68	1.75	1.79	1.82	1.92	2.5
5	1.21	1.32	1.75	1.86	2.09	2.16	2.18	2.5
10	1.69	1.78	1.98	2.01	2.11	2.17	2.19	2.5
15	1.78	2.04	2.08	2.09	2.13	2.18	2.20	2.5
20	2.08	2.09	2.16	2.19	2.21	2.23	2.29	2.5
Conclusion: PASS								
Test Date : Apr.16,2015							Test Engineer : Leo Liu	

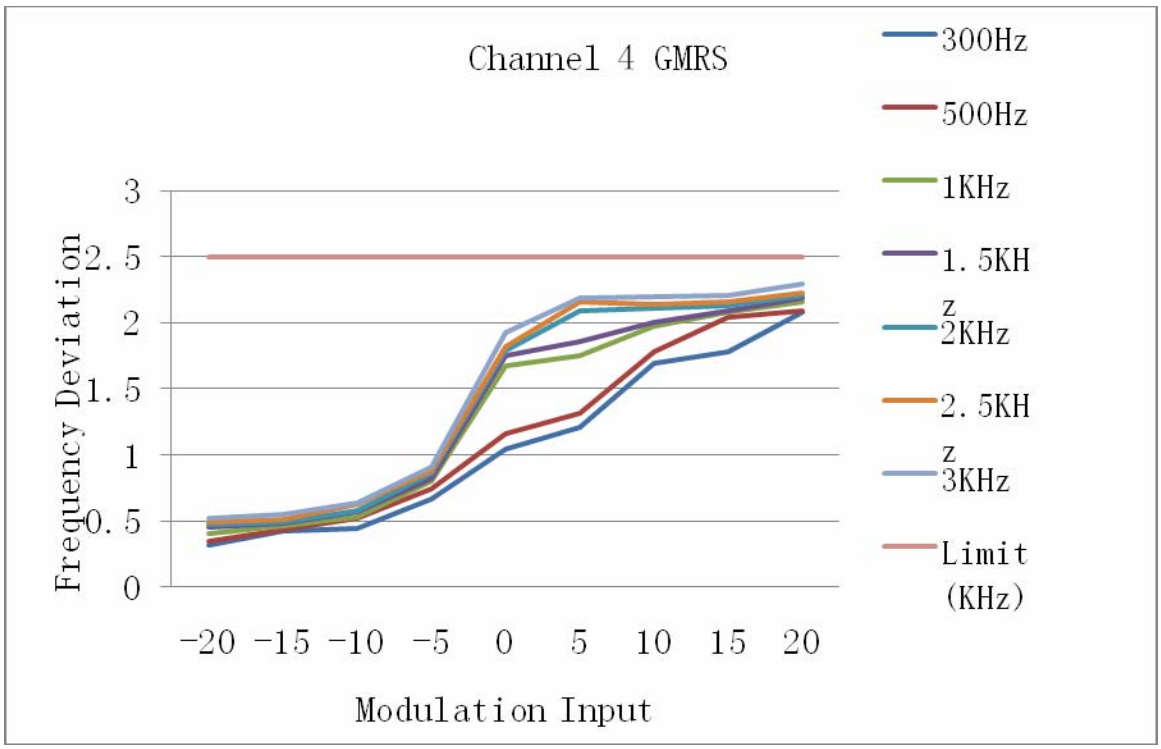

Channel 11: 467.6375MHz, FRS								
Modulation Input(dB)	Peak Frequency Deviation (KHz)							Limit (KHz)
	300Hz	500Hz	1KHz	1.5KHz	2KHz	2.5KHz	3KHz	
-20	0.31	0.34	0.43	0.46	0.48	0.5	0.53	2.5
-15	0.44	0.46	0.49	0.51	0.52	0.54	0.58	2.5
-10	0.48	0.54	0.55	0.57	0.58	0.62	0.65	2.5
-5	0.64	0.71	0.81	0.84	0.87	0.89	0.93	2.5
0	1.02	1.13	1.59	1.71	1.76	1.85	1.94	2.5
5	1.19	1.31	1.71	1.84	2.04	2.11	2.15	2.5
10	1.63	1.74	1.95	2.03	2.11	2.15	2.18	2.5
15	1.75	2.01	2.06	2.11	2.21	2.22	2.26	2.5
20	2.01	2.08	2.12	2.15	2.22	2.24	2.28	2.5
Conclusion: PASS								
Test Date : Apr.16,2015						Test Engineer : Leo Liu		

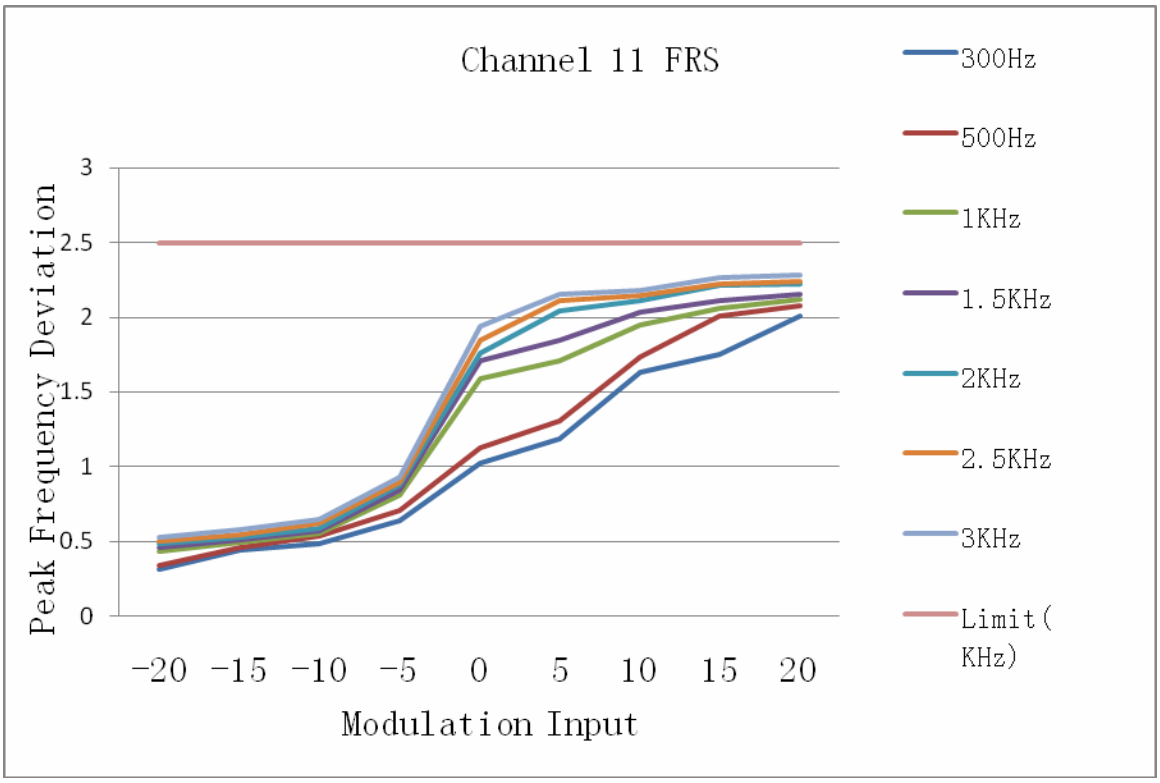

Audio Frequency Response

Channel 11: 467.6375MHz, FRS		
Modulation Frequency(Hz)	Deviation (KHz)	Limit (KHz)
100	0.39	3.125
200	0.42	3.125
300	0.45	3.125
400	0.48	3.125
500	0.49	3.125
600	0.50	3.125
700	0.53	3.125
800	0.54	3.125
900	0.56	3.125
1000	0.61	3.125
1500	1.38	3.125
2000	1.89	3.125
2500	2.12	3.125
3000	1.82	3.125
3500	1.42	3.125
4000	0.87	3.125
4500	0.52	3.125
5000	0.46	3.125

Conclusion:PASS	
Test Date : Mar.20,2015	Test Engineer : Leo Liu

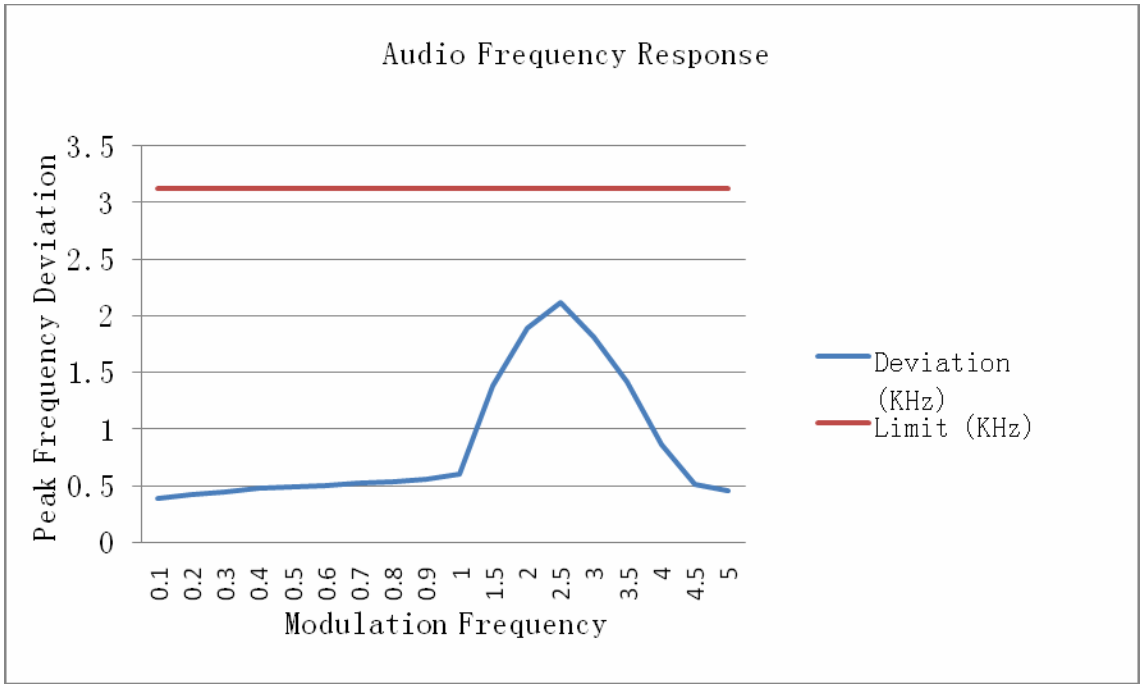

Audio Low Pass Filter Response

For this device the Audio Low Pass Filter was integrated in chip U301(EL3280), and it's impossible to measure the response of Audio Low Pass Filter.According technical spec of U301, the Audio Low Pass Filter Response curve as below, and comply this FCC and IC requirements.

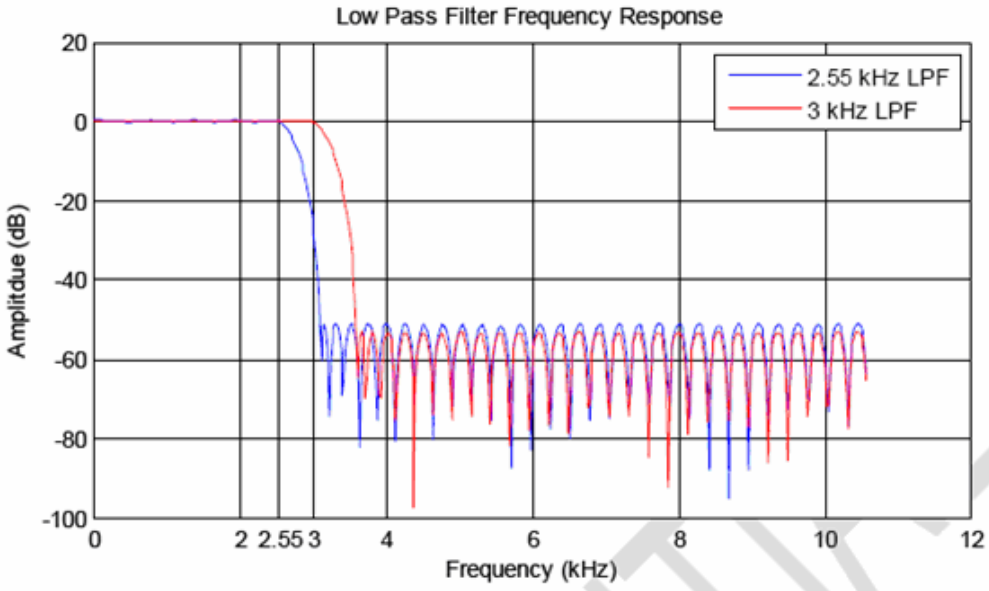

Frequency Response of Low Pass Filter

6. Radiated Spurious Emission

6.1. Test equipment

Item	Equipment	Manufacturer	Model No.	Serial No.	Last Cal.	Cal. Interval
1	Spectrum analyzer	R&S	FSU26	1166.1660.26	2014/10/25	1Y
2	EMI Test Receiver	R&S	ESU8	100316	2014/10/25	1 Y
3	Loop antenna	TESEQ	HLA6120	20129	2015/04/12	1 Y
4	Trilog Broadband Antenna	Schwarzbeck	VULB9163	9163-462	2015/04/12	1Y
5	Double Ridged Horn Antenna	R&S	HF907	100276	2015/04/12	1Y
6	Double Ridged Horn Antenna	R&S	HF907	100265	2015/04/12	1Y
7	Dipole antenna	Schwarzbeck	UHAP	1101	2014/10/25	1Y
8	Dipole antenna	Schwarzbeck	VHAP	1118	2014/10/25	1Y
9	RF Cable	R&S	R01	10403	2014/10/25	1Y
10	RF Cable	R&S	R02	10512	2014/10/25	1Y
11	RF Cable	R&S	R01	10454	2014/10/25	1Y
12	RF Cable	R&S	R02	10343	2014/10/25	1Y
13	Signal Generator	R&S	SMBV100A	1407.6004K02	2014/10/25	1Y
14	Test software	Audix	E3	34224543	/	/

6.2. Block diagram of test setup

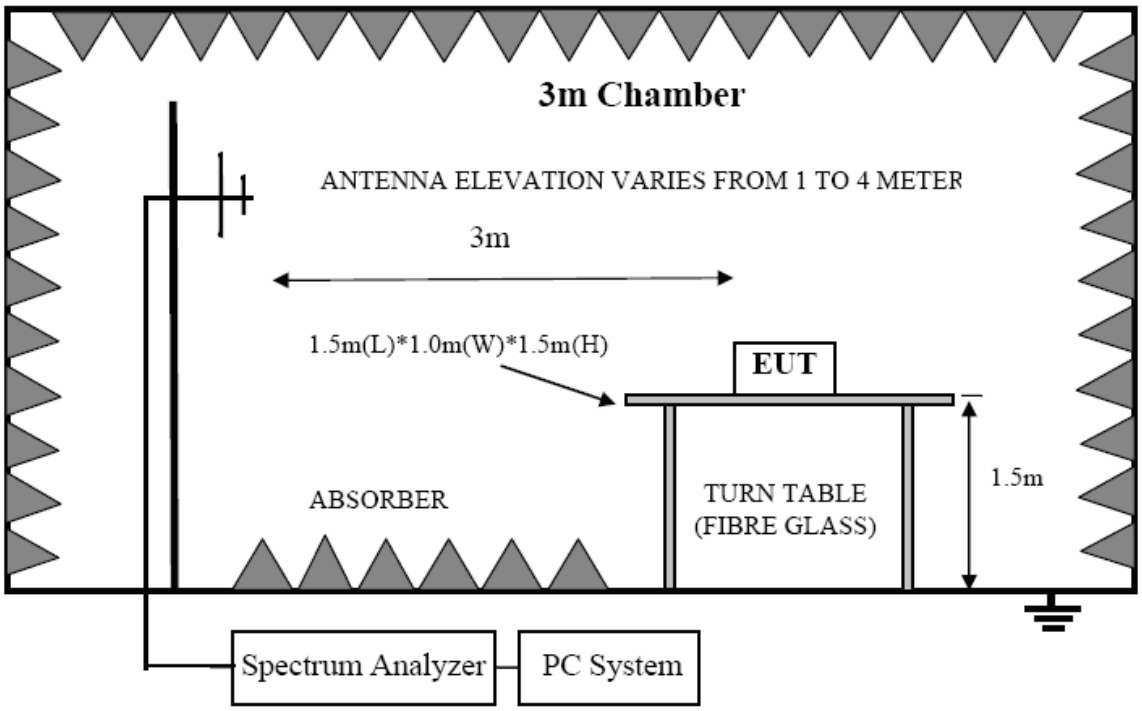

6.3. Limit

The unwanted emission should be attenuated below TP by at least 43+10log(Transmit Power) dB and unwanted emissions falling within the restricted bands of RSS-Gen shall be attenuated to the limits provided in this section or to the general field strength limits shown in RSS-Gen, whichever are less stringent.

6.4. Test Procedure

(1) On a test site, the EUT shall be placed on a 1.5m turntable and in the position closest to the normal use as declared by the user.

(2) The test antenna shall be oriented initially for vertical polarization located 3m from the EUT to correspond to the transmitter.

(3)The output of the antenna shall be connected to the measuring receiver and either a peak or quasi-peak detector was used for the measurement as indicated on the report. The detector selection is based on how close the emission level was approaching the limit.

(4)The transmitter shall be switched on; if possible, without the modulation and the measurement receiver shall be tuned to the frequency of the transmitter under test.

(5)The test antenna shall be raised and lowered through the specified range of height until the measuring receiver detects a maximum signal level.

(6)The transmitter shall than be rotated through 360°in the horizontal plane, until the maximum signal level is detected by the measuring receiver.

(7)The test antenna shall be raised and lowered again through the specified range of height until the measuring receiver detects a maximum signal level.

(8)The maximum signal level detected by the measuring receiver shall be noted.

(9)The measurement shall be repeated with the test antenna set to horizontal polarization.

(10) Replace the antenna with a proper Antenna (substitution antenna).

(11) The substitution antenna shall be oriented for vertical polarization and, if necessary, the length of the substitution antenna shall be adjusted to correspond to the frequency of transmitting.

(12) The substitution antenna shall be connected to a calibrated signal generator.

(13) If necessary, the input attenuator setting of the measuring receiver shall be adjusted in order to increase the sensitivity of the measuring receiver.

(14) The test antenna shall be raised and lowered through the specified range of the height to ensure that the maximum signal is received.

(15) The input signal to substitution antenna shall be adjusted to the level that produces a level detected by the measuring receiver, that is equal to the level noted while the transmitter radiated power was measured, corrected for the change of input attenuation setting of the measuring receiver.

(16) The input level to the substitution antenna shall be recorded as power level in dBm, corrected for any

change of input attenuator setting of the measuring receiver.

(17) The measurement shall be repeated with the test antenna and the substitution antenna oriented for horizontal polarization.

(18) Frequency from lowest frequency 21.72MHz) into 10th harmonic(5GHz) was was measured.

6.5. Test result

Test Mode：GMRS mode continue transmitting Channel 4, Frequency= 462.6375MHz, with earphone and power adapter 2.(Note 1)					
Channle Maximum Power:26.61dBm (0.458W)					
Frequency (MHz)	Antenna polarization	Result (dBm)	Limit(Note 2) (dBm)	Margin (dB)	Conclusion
925.27	H	-32.47	-13	19.47	**PASS**
1388	H	-32.80	-13	19.80	**PASS**
1852	H	-30.98	-13	17.98	**PASS**
925.27	V	-31.29	-13	18.29	**PASS**
1388	V	-26.89	-13	13.89	**PASS**
1852	V	-28.64	-13	15.64	**PASS**
Note 1: According explorer test, this configuration have worst emission. Note 2:Limit= 25.96dBm- (43+10log(Transmit Power)) = -13dBm					
Test Date : Apr.16,2015				Test Engineer : Leo Liu	

Test Mode：FRS mode continue transmitting Channel 11, Frequency= 467.6375MHz, with earphone and power adapter 2.(Note 1)					
Channle Maximum Power:26.61dBm (0.458W)					
Frequency (MHz)	Antenna polarization	Result (dBm)	Limit(Note 2) (dBm)	Margin (dB)	Conclusion
935.27	H	-31.26	-13	18.26	**PASS**
1400	H	-31.62	-13	18.62	**PASS**
2336	H	-30.58	-13	17.58	**PASS**
935.27	V	-33.26	-13	20.26	**PASS**
1400	V	-27.68	-13	14.68	**PASS**
2336	V	-28.71	-13	15.71	**PASS**
Note 1: According explorer test, this configuration have worst emission. Note 2:Limit= 25.18dBm- (43+10log(Transmit Power)) = -13dBm					
Test Date : Apr.16,2015				Test Engineer : Leo Liu	

7. Frequency Stability

7.1. Test equipment

Item	Equipment	Manufacturer	Model No.	Serial No.	Last Cal.	Cal. Interval
. 1	Spectrum analyzer	R&S	FSU	1166.1660.26	2014/10/25	1 Y
. 2	Attenuator	Mini-Circuits	BW-S10W2	101109	2014/10/25	1 Y
. 3	RF Cable	Micable	C10-01-01-1	100309	2014/10/25	1 Y
4	Temperature controller	Dongguan Bell	BE-TH-150M3	201208153364	2014/10/25	1 Y
5	DC Power Source	ALLPower	ADC50-20	990406	2014/10/25	1 Y

7.2. Block diagram of test setup

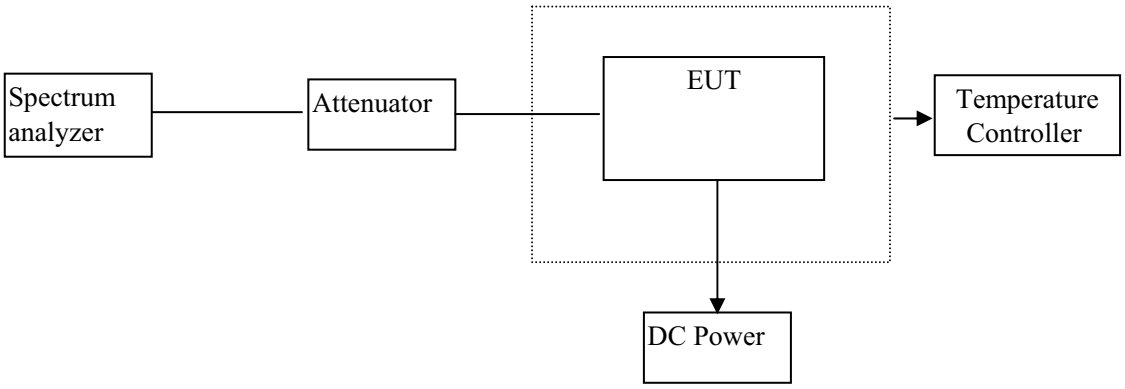

7.3. Limits

According to FCC 95.621

(b) Each GMRS transmitter for mobile station, small base station and control station operation must be maintained within a frequency tolerance of 0.0005%. Each GMRS transmitter for base station (except small base), mobile relay station or fixed station operation must be maintained within a frequency tolerance of 0.00025%.

According to FCC 95.627

(b) Each FRS unit must be maintained within a frequency tolerance of 0.000 25%.

According to RSS-210 A6.1.6

FRS Devices: Carrier frequency tolerance shall be better that ±5 ppm

According to RSS-210 A6.2.6

GMRS Devices: Carrier frequency tolerance shall be better that ±5 ppm

7.4. Test Procedure

Frequency stability versus environmental temperature:

(1). Setup the configuration per figure 1 for frequencies measurement inside an environment chamber,

Install new battery in the EUT.

(2). Turn on EUT and set SA center frequency to the EUT radiated frequency. Set SA Resolution Bandwidth to 1KHz and Video Resolution Bandwidth to 1KHz and Frequency Span to 50KHz.Record this frequency as reference frequency.

(3). Set the temperature of chamber to 50℃. Allow sufficient time (approximately 30 min) for the temperature of the chamber to stabilize. While maintaining a constant temperature inside the chamber, turn the EUT on and measure the EUT operating frequency.

(4). Repeat step 2 with a 10℃ decreased per stage until the lowest temperature -30℃ is measured, record all measured frequencies on each temperature step.

Frequency stability versus input voltage:

(1). Setup the configuration per figure 1 for frequencies measured at temperature if it is within 15℃ to 25 ℃. Otherwise, an environment chamber set for a temperature of 20℃ shall be used. The EUT shall be powered by DC 4.5 V

(2). Set SA center frequency to the EUT radiated frequency. Set SA Resolution Bandwidth to 1 KHz and Video Resolution Bandwidth to 1KHz. Record this frequency as reference frequency.

(3). Supply the EUT primary voltage at the operating end point which is specified by manufacturer and record the frequency.

7.5. Test result

Frequency Tolerance							
CH #	Frequency (MHz)	TYPE	Result			FCC limit	RSS-210 limit
			Measured (MHz)	Tolerance (%)	Tolerance (ppm)	%	ppm
1	462.5625	GMRS	462.5628	0.000065	0.65	0.0005%	±5
2	462.5875	GMRS	462.5878	0.000065	0.65	0.0005%	±5
3	462.6125	GMRS	462.6128	0.000065	0.65	0.0005%	±5
4	462.6375	GMRS	462.6378	0.000065	0.65	0.0005%	±5
5	462.6625	GMRS	462.6628	0.000065	0.65	0.0005%	±5
6	462.6875	GMRS	462.6878	0.000065	0.65	0.0005%	±5
7	462.7125	GMRS	462.7127	0.000043	0.43	0.0005%	±5
8	467.5625	FRS	467.5628	0.000064	0.64	0.00025%	±5
9	467.5875	FRS	467.5878	0.000064	0.64	0.00025%	±5
10	467.6125	FRS	467.6128	0.000064	0.64	0.00025%	±5
11	467.6375	FRS	467.6378	0.000064	0.64	0.00025%	±5
12	467.6625	FRS	467.6628	0.000064	0.64	0.00025%	±5
13	467.6875	FRS	467.6878	0.000064	0.64	0.00025%	±5
14	467.7125	FRS	467.7128	0.000064	0.64	0.00025%	±5
15	462.55	GMRS	462.55	0	0	0.0005%	±5
16	462.575	GMRS	462.575	0	0	0.0005%	±5
17	462.6	GMRS	462.6	0	0	0.0005%	±5
18	462.625	GMRS	462.625	0	0	0.0005%	±5

Frequency Tolerance							
CH #	Frequency (MHz)	TYPE	Result			FCC limit	RSS-210 limit
			Measured (MHz)	Tolerance (%)	Tolerance (ppm)	%	ppm
19	462.65	GMRS	462.65	0	0	0.0005%	±5
20	462.675	GMRS	462.677	0	0	0.0005%	±5
21	462.7	GMRS	462.7	0	0	0.0005%	±5
22	462.725	GMRS	462.726	0	0	0.0005%	±5
Conclusion:PASS							
Test Date : Apr.21,2015					Test Engineer : Leo Liu		

Frequency Deviation With Temperature Variation						
GMRS Channel 4						
Temperature (℃)	Frequency (MHz)	Result			FCC limit	RSS-210 limit
		Measured (MHz)	Tolerance (%)	Tolerance (ppm)	%	ppm
-30	462.6375	462.6373	-0.000043	-0.43	0.0005%	±5
-20	462.6375	462.6375	0	0	0.0005%	±5
-10	462.6375	462.6375	0	0	0.0005%	±5
0	462.6375	462.6377	0.000043	0.43	0.0005%	±5
10	462.6375	462.6374	-0.000022	-0.22	0.0005%	±5
20	462.6375	462.6378	0.000065	0.65	0.0005%	±5
30	462.6375	462.6375	0	0	0.0005%	±5
40	462.6375	462.6375	0	0	0.0005%	±5
50	462.6375	462.6374	-0.000022	-0.22	0.0005%	±5
FRS Channel 11						
-30	467.6375	467.6375	0	0	0.00025%	±5
-20	467.6375	467.6377	0.000043	0.43	0.00025%	±5
-10	467.6375	467.6374	-0.000021	-0.21	0.00025%	±5
0	467.6375	467.6375	0	0	0.00025%	±5
10	467.6375	467.6373	-0.000043	-0.43	0.00025%	±5
20	467.6375	467.6378	0.000064	0.64	0.00025%	±5
30	467.6375	467.6375	0	0	0.00025%	±5
40	467.6375	467.6375	0	0	0.00025%	±5
50	467.6375	467.6375	0	0	0.00025%	±5
Conclusion:PASS						
Test Date : Apr.21,2015					Test Engineer : Leo Liu	

Frequency Deviation With Voltage Variation						
GMRS Channel 4						
Voltage(V)	Frequency (MHz)	Result			FCC limit	RSS-210 limit
		Measured (MHz)	Tolerance (%)	Tolerance (ppm)	%	ppm
4.5	462.6375	462.6378	0.000065	0.65	0.0005%	±5
4.2	462.6375	462.6375	0	0	0.0005%	±5
4.0	462.6375	462.6376	0.000022	0.22	0.0005%	±5
3.7	462.6375	462.6375	0	0	0.0005%	±5
3.4	462.6375	462.6375	0	0	0.0005%	±5
3.2	462.6375	462.6372	-0.000065	-0.65	0.0005%	±5
3.0	462.6375	462.6375	0	0	0.0005%	±5
FRS Channel 11						
4.5	467.6375	467.6375	0	0	0.00025%	±5
4.2	467.6375	467.6377	0.000043	0.43	0.00025%	±5
4.0	467.6375	467.6374	-0.000021	-0.21	0.00025%	±5
3.7	467.6375	467.6375	0	0	0.00025%	±5
3.4	467.6375	467.6375	0	0	0.00025%	±5
3.2	467.6375	467.6375	0	0	0.00025%	±5
3.0	467.6375	467.6375	0	0	0.00025%	±5
Conclusion:PASS						
Test Date : Apr.21,2015				Test Engineer : Leo Liu		

8. Test setup photograph

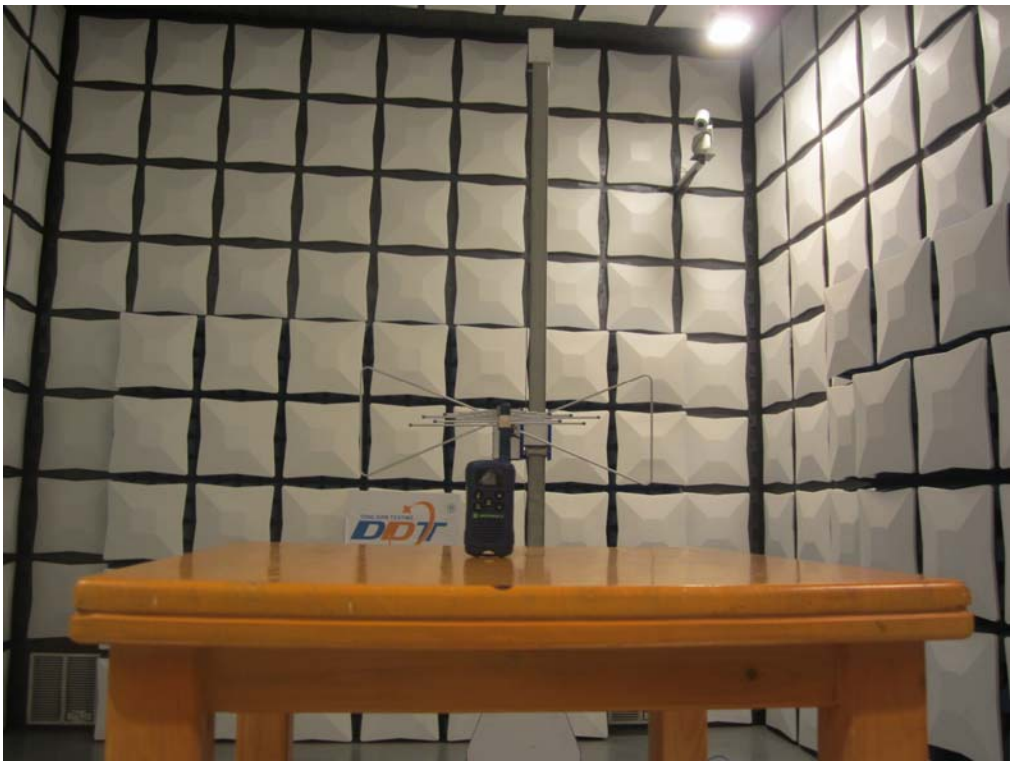

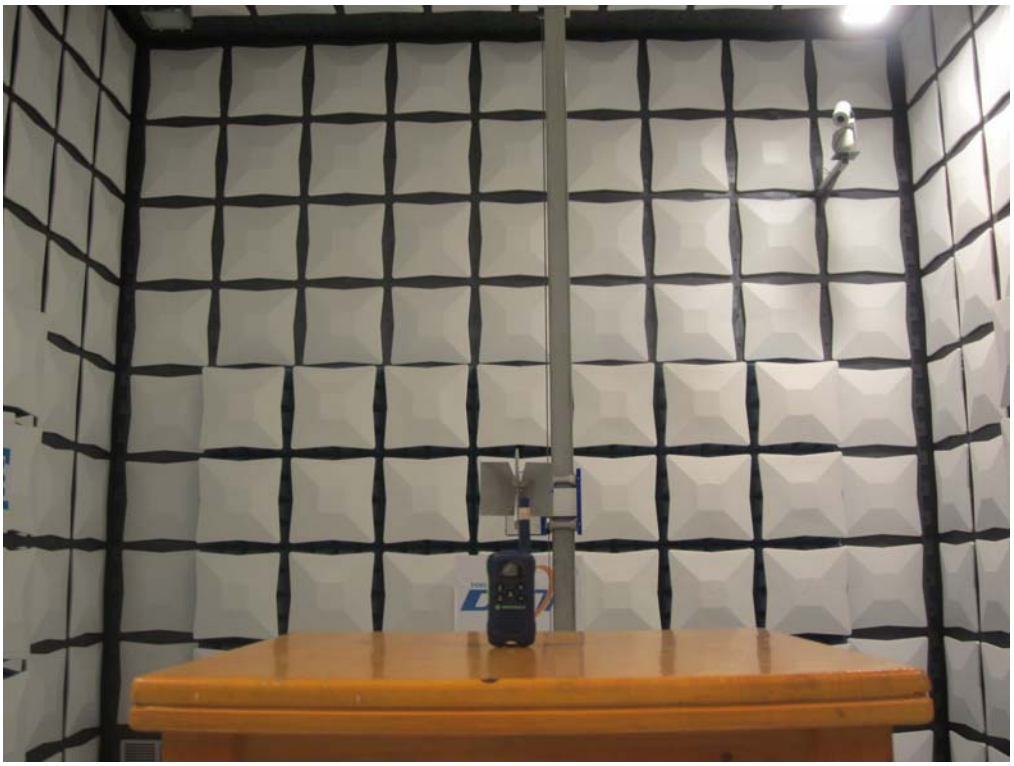

9. Photos of the EUT

MOTOROLA
TALKABOUT

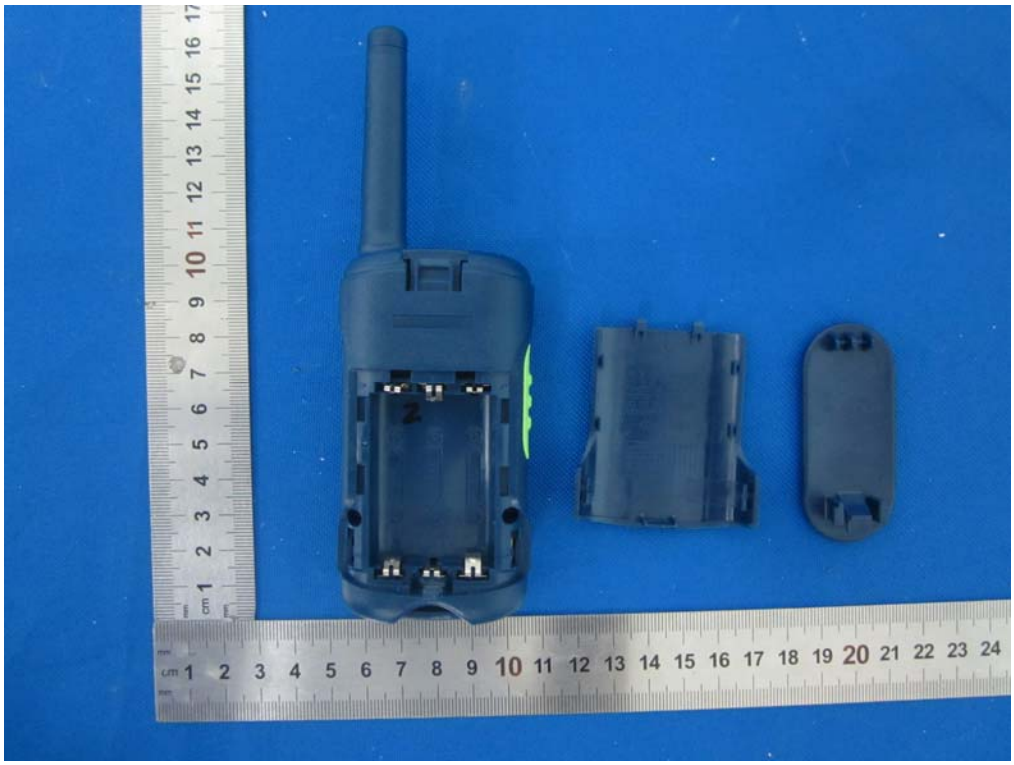

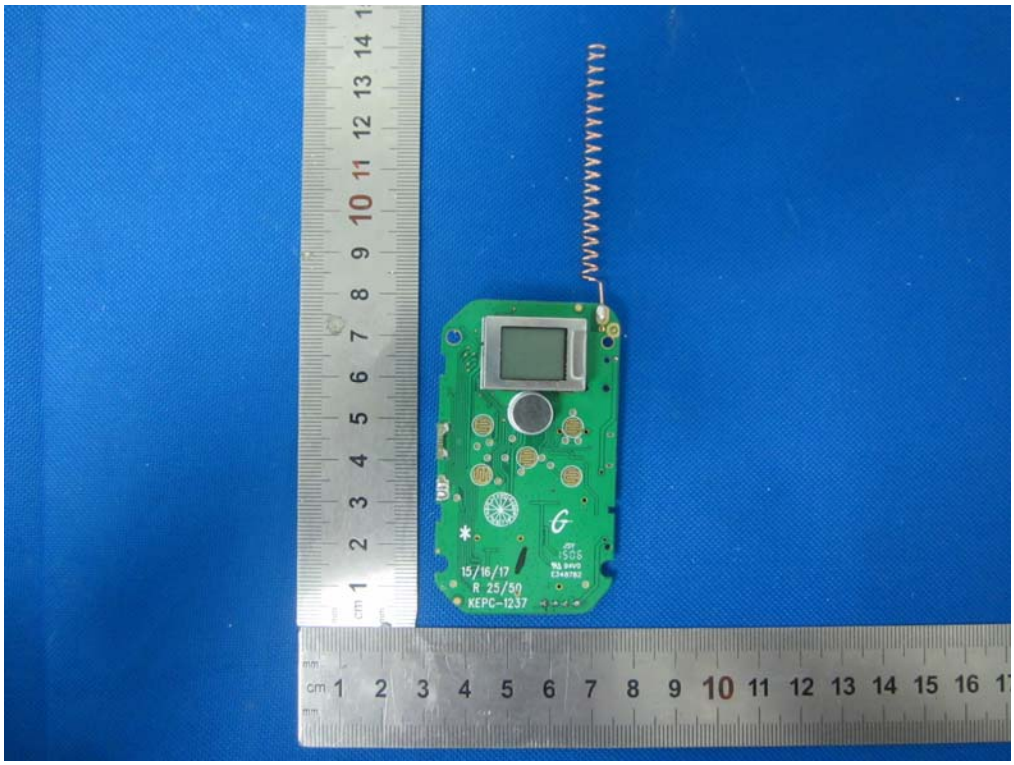
15/16/17
R 25/50
KEPC-1237

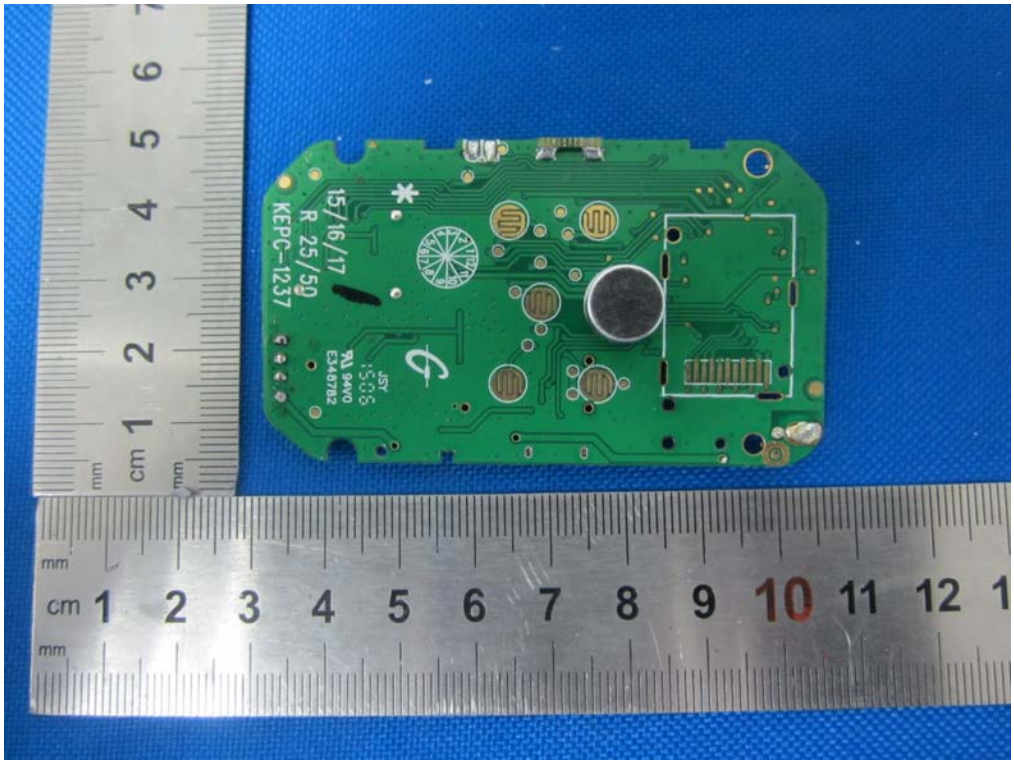
15/16/17
R 25/50
KEPC-1237

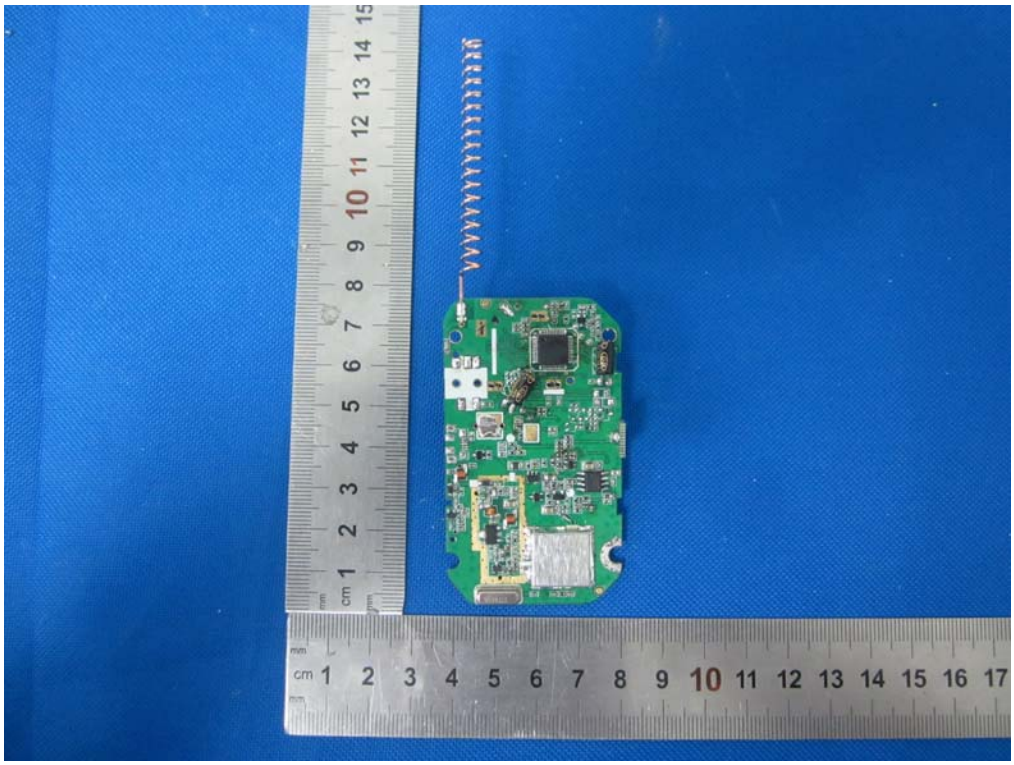

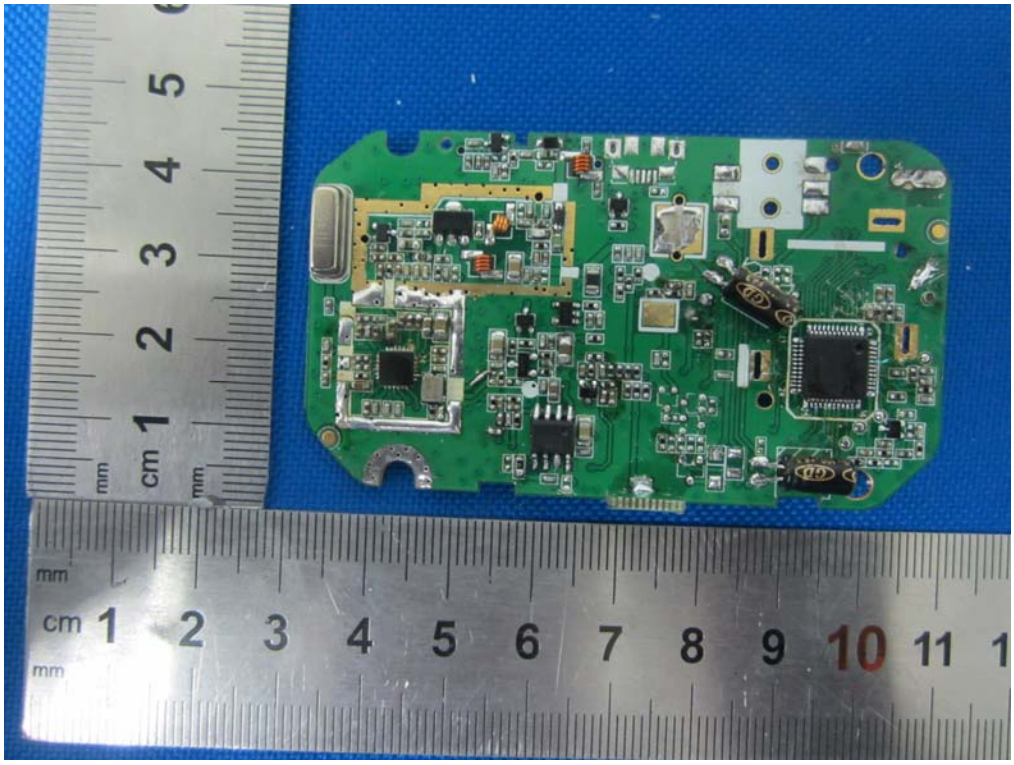

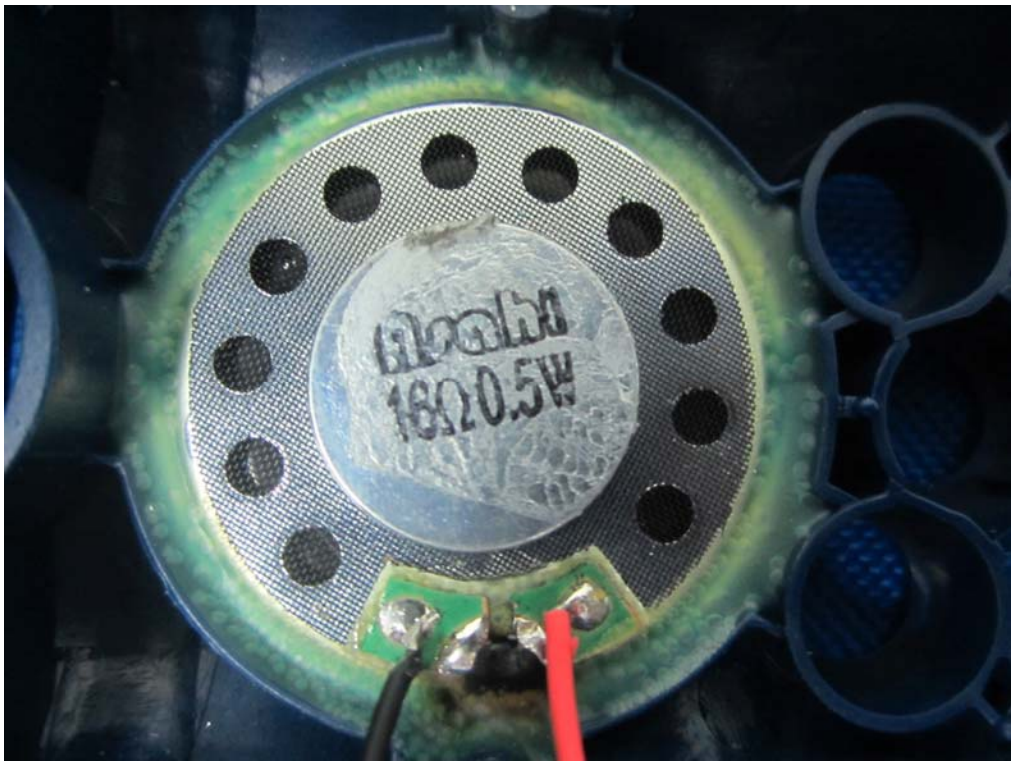

END OF REPORT