BelAir20EO and AP 511x Series Quick Install Guide

QUICK GUIDE

1/006 92-LZA 101 803 Uen D

Copyright

© Ericsson AB 2013. All rights reserved. No part of this document may be reproduced in any form without the written permission of the copyright owner.

Disclaimer

The contents of this document are subject to revision without notice due to continued progress in methodology, design and manufacturing. Ericsson shall have no liability for any error or damage of any kind resulting from the use of this document.

Trademark List

Wi-Fi®	Wi-Fi® is a registered trademark of the Wi-Fi Alliance.
Wi-Fi Certified Logo	The Wi-Fi CERTIFIED logo is a registered trademark of the Wi-Fi Alliance.
Ericsson	Ericsson is the trademark or registered trademark of Telefonaktiebolaget LM Ericsson. All other product or service names mentioned in this manual are trademarks of their respective companies.

1 Getting Started

1.1 Package Contents

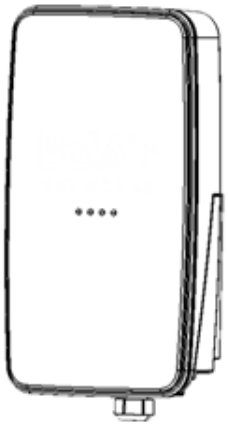

BelAir20EO or
AP 511x Series AP

Quick Guide

Power Cable
Connector Kit
(AP 5115 to
AP 5118 Only)

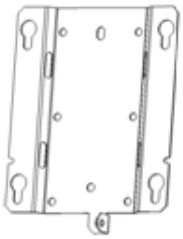

Mounting Plate

Mounting Screws

External antennas are ordered and shipped separately.

For AP 5115 to AP 5118:

- Customers supply their own power cable and use the power cable connector kit to terminate the cable.
- Units can be powered either by AC power or by Power over Ethernet (PoE).

1.2 AC Power (AP 5115 to AP 5118 Only)

These units accept AC input power in the range of 100–240 V AC. The units do not have a power switch. They are powered on when connected to a power source. Maximum AC power consumption is 14.5 W.

Warning!

The unit contains a 5-A fuse and relies on the rated fuse or circuit breaker of the wall outlet (15 A in North America, 10 A in Europe).

Warning!

Use ONLY the Ericsson power cable connector supplied with the unit. Use of any other power cable connector can damage the unit and voids the Ericsson product warranty.

1.3 Internet Port and Power

The unit can be powered with IEEE 802.3af or IEEE 802.3at Power over Ethernet (PoE). Use IEEE 802.3af PoE for most applications. IEEE 802.3af PoE supplies a maximum of 12.95 W to the powered device.

Table 1 PoE Power Consumption Table

State	***PoE* Port Only**	***PoE* Port and One *LAN* Port**
Idle	3.6 W	4.05 W
Medium Traffic	8.4 W	8.85 W
High Traffic	10.8 W	11.25 W
Max. Traffic	11.76 W	12.21 W

The PoE switch or power injector must meet local and national regulatory requirements.

802.3at Power Source Equipment (PSE) Specification:

- 50.0 to 57 V DC, with 30 W output power from the PSE

802.3at Powered Device (PD) Specification:

- 42.5 to 57 V DC at the PD, with 25.5 W maximum input power to the PD

802.3at Cable Specification:

- 100 m maximum length
- Maximum cable pair resistance of 12.5 Ohms, satisfied by using CAT5 or CAT5e as specified by ANSI/TIA/EIA-568 or Class D as specified by ISO/IEC 11801:1995
- 600 mA maximum current per pair

1.4 Functional Earth Ground and Lightning Protection

Units are not designed to survive a direct lightning hit. However, they are intended to withstand the voltage and current surges induced from nearby lightning activity.

The level of required lightning protection depends on regional lightning conditions and location of installation. For example, an AP installed on a roof top requires greater lightning protection than an AP installed on the side of a building. The following is a list of recommended installation practices to mitigate the voltage and current surges induced from lightning activity. If there is a conflict between these recommendations and local or national electrical codes, the local or national electrical codes must be followed.

- For streetlight or hydro/telecom pole mounting the AC power adapter should be protected with a lightning surge protector. AC power routed to the power adapter must be routed inside the pole. If power is routed on the pole exterior, the power must be routed through a metal conduit grounded at the base of the pole.
- For rooftop installations, the unit must not be mounted at the highest point on the building. If the building has installed lightning arrestors, the unit must be located within the umbrella protection zone—a 60 degree zone under the lighting arrestor, but if possible, the unit should not be located closer than 30 feet (approx. 10 m) from the lightning arrestor. Power and Ethernet cables must be routed through independent grounded metal conduits.
- For lightning surge protection, the installer must connect a separate ground wire between the external chassis of the unit and a ground on the pole. The ground point on the AP accepts a 1/4” screw.
- It is recommended for areas susceptible to lightning activity, such as on poles, rooftops, or on or near any tall structures, that shielded CAT 5e or CAT 6 Ethernet cable be employed.
- The external antennas ports of the unit require lightning arrestors to be employed whenever the external antenna is located more than 3 feet

(approx. 1 m) from the unit. When lightning arrestors are used, they must be located within 3 feet (approx. 1 m) of the unit and must be grounded to both the unit and protective earth ground. The ¼” GND screw of the unit can be used for this application.

2 Installing the BelAir20EO and AP 511x Series AP

2.1 Step 1—Select Location

Choose a proper place for the unit. In general, the best location is at the center of the intended wireless coverage area, within line of sight of all wireless devices. For optimum performance, consider these guidelines:

- Mount the unit as high as possible above any obstructions in the coverage area.
- Avoid mounting next to or near building support columns or other obstructions that can cause reduced signal or null zones in parts of the coverage area.
- Mount away from any signal absorbing or reflecting structures (such as those containing metal).

The unit can be mounted on any wall or on a pole.

Warning!

Do not install the unit in any areas where blasting (blasting caps, radio controlled equipment) or explosive gases can be present.

Warning!

To comply with FCC radio frequency (RF) exposure limits (FCC OET 65C) for the general population, antennas must be located a minimum distance of 12 inches (approx. 30 cm) or more from the body of all persons.

2.2 Step 2—Mount Unit

Wall or Large Pole Mounting

Large poles have an outer diameter greater than 3 inches (7.6 cms). If mounted on a flat surface, the unit must be mounted to a surface that is at least 1/2-inch plywood or its equivalent. Poles must have the equivalent rigidity.

1. Attach the mounting plate to the wall or pole.
   - For walls, use up to four 1/4 inch (M6) anchoring bolts. Use the plate as a drill hole template. The outer edges of the plate must be elevated from the wall surface while the center channel must touch the wall surface.
   - For large poles, use through bolts or use the pairs of slots for stainless steel strapping. The center channel must touch the pole surface.

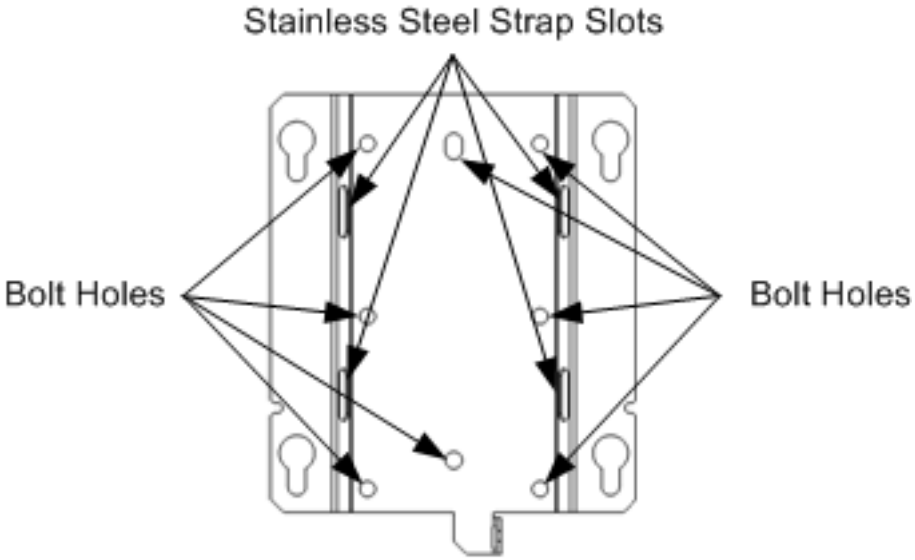

2. Connect ground wire to unit.

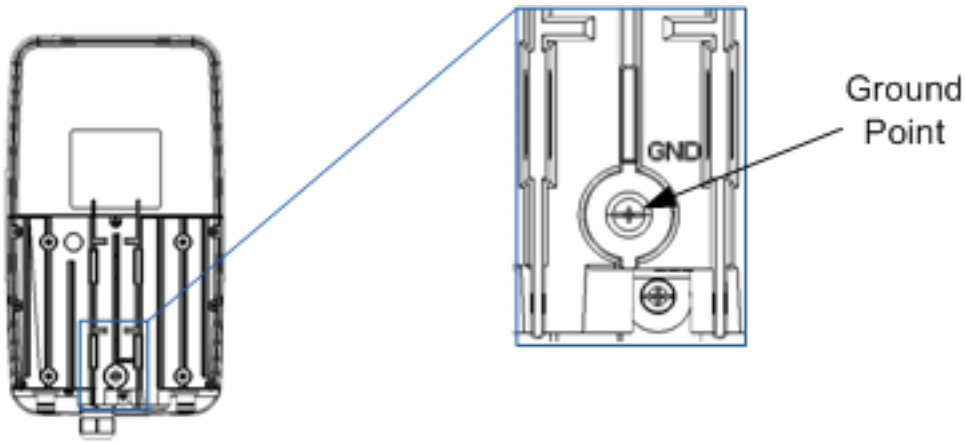

3. Attach four mounting screws to unit back.

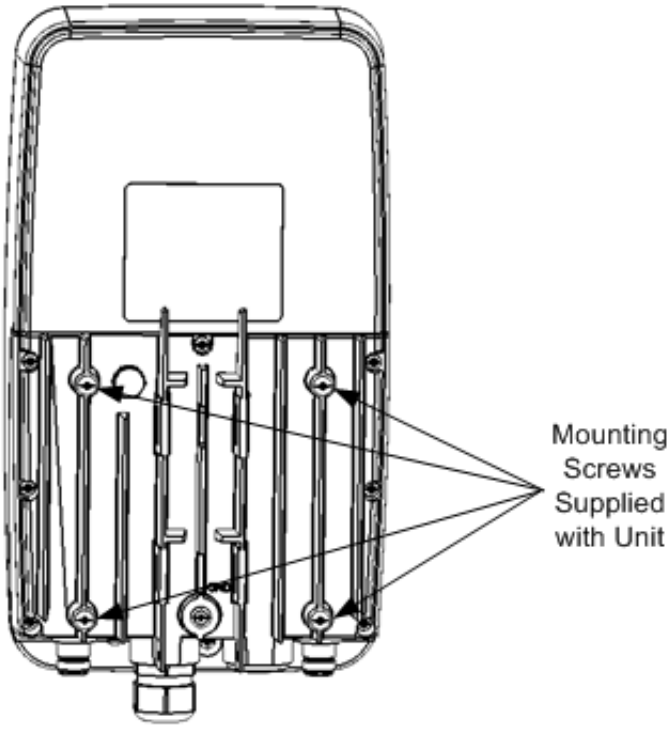

Note: Ground wire not shown.

4. Attach unit to mounting plate:

a Insert mounting screws on the back of the unit into shoulder screw holes on mounting plate. Slide unit down until screws are into the slots. Tighten screws snug.

b Screw in the remaining mounting screw at base of unit into the mounting plate hole.

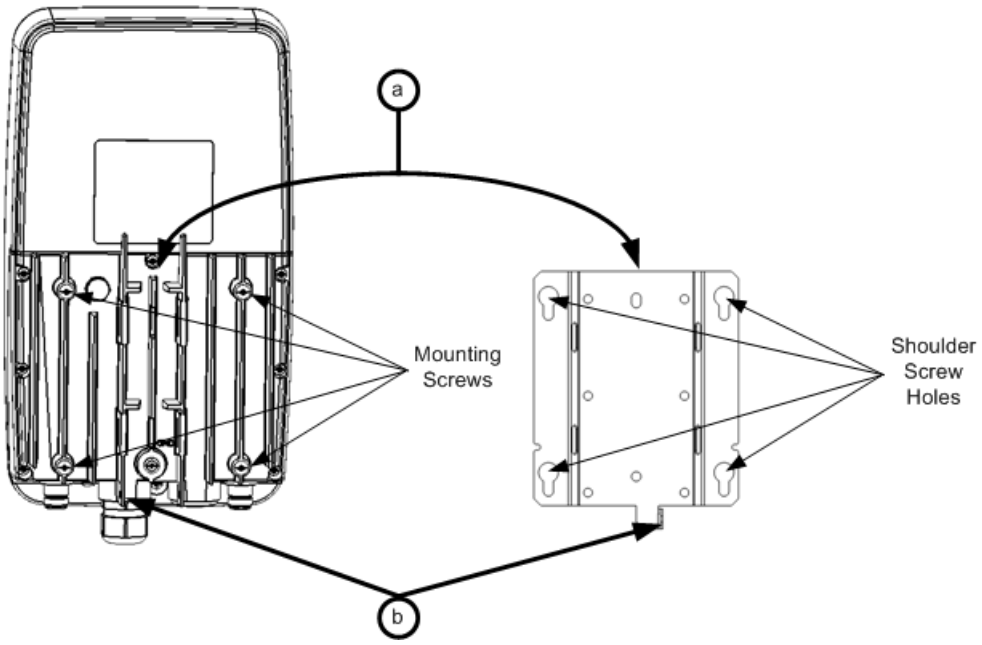

Note: Ground wire not shown.

Small Pole Mounting

Small poles have an outer diameter less than 3 inches (7.6 cms).

1. Connect ground wire to unit.

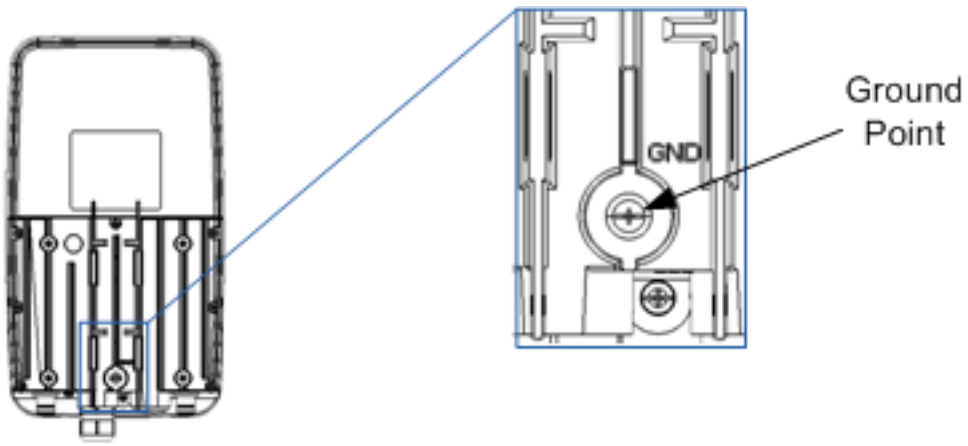

2. Use two stainless steel straps to secure unit to pole.

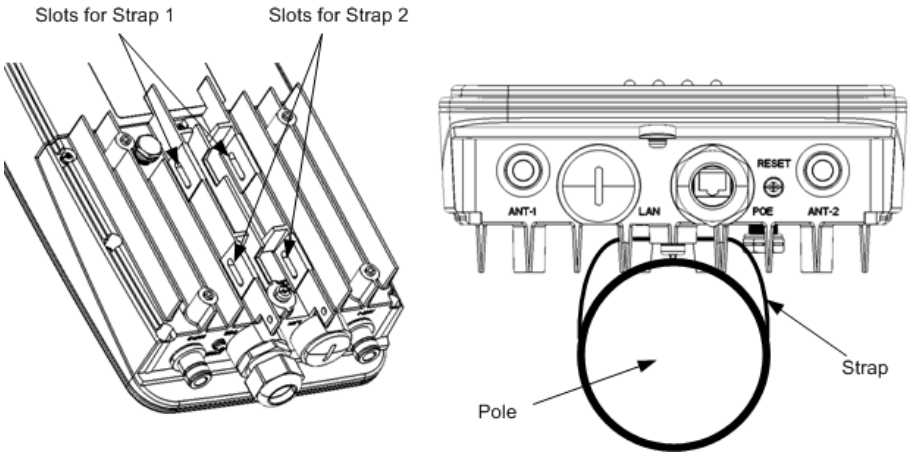

Note: Ground wire not shown. Strap mounting applies to all units except the AP 5115 to AP 5118.

2.3 Step 3—Mount and Attach External Antennas

This step applies only to the following APs:

Table 2 APs and Required Antennas

APs	Required Antennas	Ericsson Description and Part Number
BelAir20EO-11C, BelAir20EO-11CR2, AP 5117R, AP 5117U	Two 5 GHz External 11.5 dBi	5 GHz 11.5 dBi Dual Feed Directional Antenna (BNCKH0091 or INE 105 2162)
BelAir20EO-11D, BelAir20EO-11DR2, AP 5118R, AP 5118U	Two 2.4 GHz External 8 dBi	2.4 GHz 8 dBi Dual Feed Directional Antenna (BNCKH0007 or INE 105 2159)
AP 5113	One 2.4 GHz External 12 dBi	Dual Polarization 2.4–2.5 GHz Flat Panel Antenna 12 dBi (KRE 105 217) Mounting Kit (KRY 901 293)

The external antennas must be approved by Ericsson specifically for the APs. The antennas are ordered and shipped separately.

1. Attach the 5 GHz or 2.4 GHz antennas to their mounting surface.

   Ericsson provides several different types of 5 GHz and 2.4 GHz antennas, each with its own requirements and procedures for attaching to a mounting surface. For details on attaching the antennas to their mounting surface,

refer to the mounting procedures supplied with the antennas that were ordered.

2. Connect external 5 GHz or 2.4 GHz antennas to connectors. See the figure. Connect only antennas that are approved specifically for the units. Either antenna can connect to either connector. Use thread-locker and self-amalgamating tape to keep connection tight and waterproof.

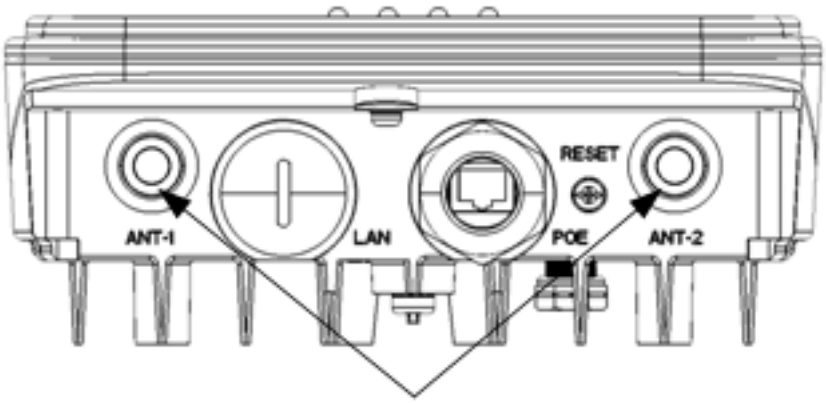

Antenna Connectors

- Connect external 5 GHz or 2.4 GHz antennas here.
- Connect only antennas that are approved specifically for the units.
- Either antenna can connect to either connector.
- Use thread-locker and self-amalgamating tape to keep connection tight and waterproof.

Note: Ground wire and mounting hardware not shown.

2.4 Step 4—Prepare Power Cable (AP 5115 to AP 5118 Only)

Refer to Figure 1.

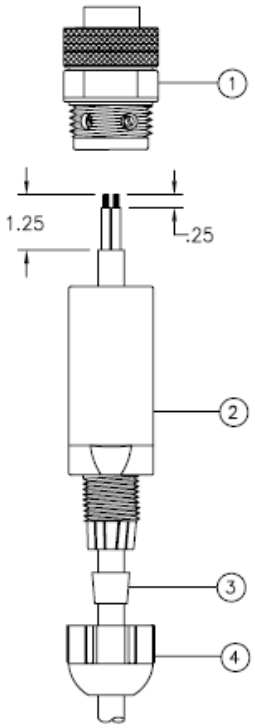

Figure 1 Power Cable Connector Assembly

1. Place compression nut (4), grommet (3), and body (2) over power cable as shown in Figure 1.

2. Strip outer jacket and inner conductors as shown in Figure 1.

3. Secure conductors to appropriate terminals by tightening screws on insert assembly (1). Refer to the following table.

Conductor Type	North American Color	European Color	Terminal ID
Ground	Green/Yellow	Green/Yellow	1
Power	Black	Brown	2
Neutral	White	Blue	3

4. Attach body (2) to insert assembly (1) by rotating black knurled ring on insert assembly in a clockwise direction.

5. Secure compression nut (4) to body (2) by rotating in a clockwise direction.

2.5 Step 5—Connect and Power On

BelAir20EO and All AP 511x Series: Power over Ethernet

The AP gets its operating power from the *PoE* port when connected to a device that provides IEEE 802.3af or 802.3at compliant Power over Ethernet (PoE).

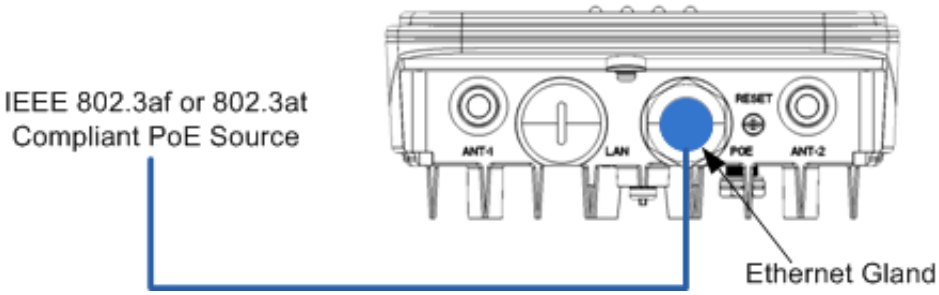

Figure 2 Power Connection for BelAir20EO and All AP 511x Series Power over Ethernet

Note: Ground wire and mounting hardware not shown.

Warning!

The BelAir20EO and AP 511x series AP must be connected to a power source that complies to IEEE 802.3af or 802.3at.

Caution!

The PoE connection to the BelAir20EO and AP 511x series AP must use the supplied Ethernet gland to ensure a waterproof connection. Failure to use the Ethernet gland voids the Ericsson product warranty.

AP 5115 to AP 5118 Only

The AP can get its operating power directly from an AC power source or from the *Internet* port when connected to a device that provides IEEE 802.3af or 802.3at compliant Power over Ethernet (PoE). If the AP is connected to both a PoE source device and an AC power source, the AP automatically adjusts to use the most suitable power source.

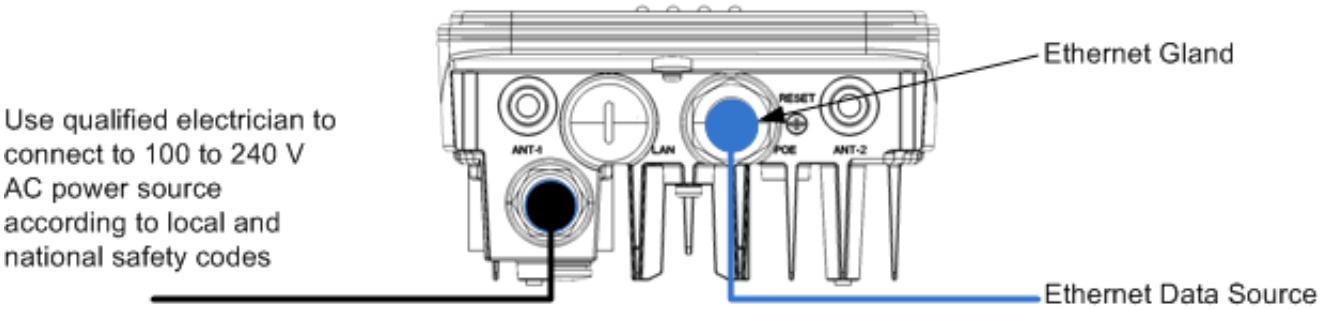

Figure 3 Power Connections for AP 5115 to AP 5118

Note: Ground wire and mounting hardware not shown.

2.6 Step 6—Check Indicators

After powering on, wait 2 minutes and check the indicators on the unit.

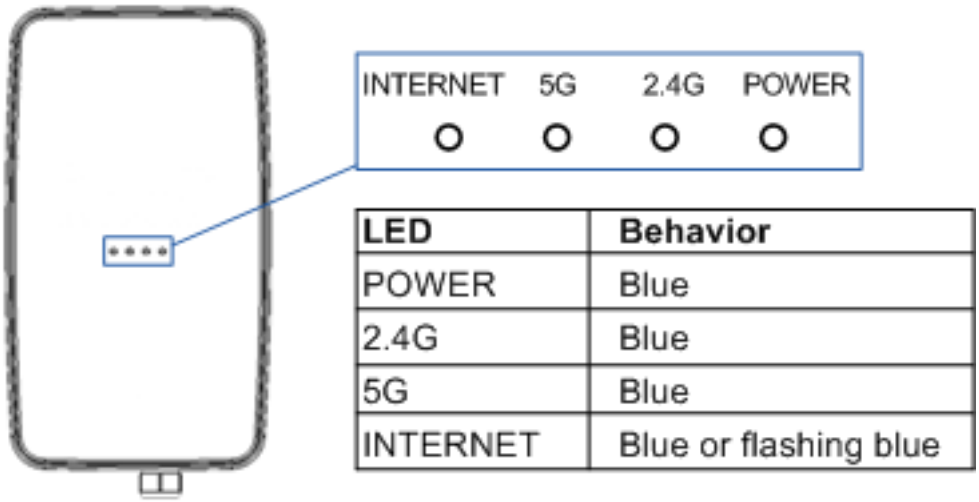

LED	Behavior
POWER	Blue
2.4G	Blue
5G	Blue
INTERNET	Blue or flashing blue

If the indicators are not as shown, refer to the *BelAir20EO and AP 511x Series Technical Description*, *1/1550-LZA 101 803*.

2.7 Step 7—Configure Unit

In most cases, the unit configures itself automatically after powering on. To configure the unit manually through its local web interface or Command Line Interface (CLI), refer to the *Access Point User Guide*, *1/1553-LZA 101 806*.

© Ericsson AB 2013. All rights reserved. No part of this document may be reproduced in any form without the written permission of the copyright owner.

The contents of this document are subject to revision without notice due to continued progress in methodology, design and manufacturing. Ericsson shall have no liability for any error or damage of any kind resulting from the use of this document.

1/006 92-LZA 101 803 Uen D

BelAir20EO and AP 511x Series Conformity and Regulatory Statements

STATEMENT OF COMPLIANCE

1/174 02-LZA 101 803 Uen C

Copyright

© Ericsson AB 2013. All rights reserved. No part of this document may be reproduced in any form without the written permission of the copyright owner.

Disclaimer

The contents of this document are subject to revision without notice due to continued progress in methodology, design and manufacturing. Ericsson shall have no liability for any error or damage of any kind resulting from the use of this document.

Trademark List

Wi-Fi®	Wi-Fi® is a registered trademark of the Wi-Fi Alliance.
Wi-Fi Certified Logo	The Wi-Fi CERTIFIED logo is a registered trademark of the Wi-Fi Alliance.
Ericsson	Ericsson is the trademark or registered trademark of Telefonaktiebolaget LM Ericsson. All other product or service names mentioned in this manual are trademarks of their respective companies.

Contents

1	**About this Document**	**1**
1.1	Scope	1
1.2	Target Group	1
1.3	Comments About the Documentation	1
2	**Regulatory Information and Disclaimers**	**2**
3	**Manufacturer's US Federal Communication Commission Conformity Statement**	**3**
3.1	FCC Interference Statement	3
4	**Manufacturer's Industry Canada Conformity Statement**	**5**
5	**Manufacturer's European Community Conformity Statement**	**9**
6	**Declaration of Conformity for RF Exposure**	**12**
7	**Product Disposal**	**13**
7.1	Mise au rebut du produit	13
7.2	Produktentsorgung	13
7.3	Verwijdering van het product	13
7.4	Tuotteen hävittäminen	14
7.5	Smaltimento del prodotto	14
7.6	Produktbortskaffelse	14
7.7	Eliminação do produto	14
7.8	Eliminación del producto	14

1 About this Document

This section describes the scope and target groups for this document.

1.1 Scope

This document provides the regulatory information, disclaimers, and compliance statements for the product.

1.2 Target Group

The information in this document is intended for all personnel who want to learn more about the product.

1.3 Comments About the Documentation

Ericsson encourages you to provide feedback, comments or suggestions so that we can improve the documentation to better meet your needs. With your comments provide the following:

- Document title
- Document number and revision
- Page number or section number

Please send your comments to your local Ericsson Support.

2 Regulatory Information and Disclaimers

Installation and use of this device must be in strict accordance with the instructions included in the user documentation provided with the product. Any changes or modifications to this product not expressly approved by the party responsible for compliance could void the user's authority to operate this equipment.

The manufacturer is not responsible for any interference to radio or television equipment caused by unauthorized modification of this device, or attachment of any antennas or equipment other than those specified by the manufacturer. The manufacturer or its authorized resellers or distributors will assume no liability for any damage arising from failure to comply with these guidelines, or failure to comply with local, regional or national safety, electrical or building codes, or government regulations.

This product is manufactured in China with originating and non-originating product.

Ce produit est fabriqué en Chine avec des matières originaires et non originaires du produit.

3 Manufacturer's US Federal Communication Commission Conformity Statement

This device complies with Part 15 of the FCC Rules.

Operation is subject to the following two conditions (1) this device may not cause harmful interference, and (2) this device must accept any interference received, including interference that may cause undesired operation.

3.1 FCC Interference Statement

This equipment has been tested and found to comply with the limits for a Class B digital device, pursuant to Part 15 of the FCC Rules. These limits are designed to provide reasonable protection against harmful interference in a residential installation. This equipment generates, uses and can radiate radio frequency energy and, if not installed and used in accordance with the instructions, may cause harmful interference to radio communications. However, there is no guarantee that interference will not occur in a particular installation. If this equipment does cause harmful interference to radio or television reception, which can be determined by turning the equipment off and on, the user is encouraged to try to correct the interference by one or more of the following measures:

- Reorient or relocate the receiving antenna.
- Increase the separation between the equipment and receiver.
- Connect the equipment into an outlet on a circuit different from that to which the receiver is connected.
- Consult the dealer or an experienced radio/TV technician for assistance.

FCC Caution: Any changes or modifications not expressly approved by the party responsible for compliance could void the user's authority to operate this equipment.

This device complies with Part 15 of the FCC Rules. Operation is subject to the following two conditions: (1) This device may not cause harmful interference, and (2) this device must accept any interference received, including interference that may cause undesired operation.

IMPORTANT NOTE:

FCC Radiation Exposure Statement:

This device complies with FCC RF radiation exposure limits for an uncontrolled environment. This equipment should be installed and operated with a minimum distance of 12 inches (30 cm) between the radiator and your body.

This transmitter must not be colocated or operating in conjunction with any other antenna or transmitter.

Note: The country code selection is for non-US model only and is not available to all US models. Per FCC regulation, all Wi-Fi® products marketed in US must be fixed to US operation channels only.

4 Manufacturer's Industry Canada Conformity Statement

This device complies with RSS-210 of the Industry Canada Rules. Operation is subject to the following two conditions: (1) This device may not cause harmful interference, and (2) this device must accept any interference received, including interference that may cause undesired operation.

IMPORTANT NOTE:

Radiation Exposure Statement:

This equipment complies with IC radiation exposure limits set forth for an uncontrolled environment. This equipment should be installed and operated with minimum distance 30 cm between the radiator and a human body.

Caution:

This device has been designed to operate with an antenna having a maximum gain of 12 dB. Antennas having a higher gain is strictly prohibited per regulations of Industry Canada. The required antenna impedance is 50 ohms.

Table 1 BelAir20EO and AP 511x series Antennas

Type	Gain	Brand	Manufacturer
Internal omnidirectional antenna	4.4 dBi	Ericsson	Ericsson
Internal omnidirectional antenna	6.7 dBi	Ericsson	Ericsson
Internal directional antenna	8 dBi	Ericsson	Ericsson
Internal directional antenna	11.5 dBi	Ericsson	Ericsson
Internal directional antenna	12 dBi	Ericsson	Ericsson
External directional antenna	8 dBi	Ericsson	Ericsson
External directional antenna	11.5 dBi	Ericsson	Ericsson

Under Industry Canada regulations, this radio transmitter may only operate using an antenna of a type and maximum (or lesser) gain approved for the transmitter by Industry Canada. To reduce potential radio interference to other users, the antenna type and its gain should be so chosen that the equivalent

isotropically radiated power (e.i.r.p.) is not more than that necessary for successful communication.

This radio transmitter has been approved by Industry Canada to operate with the antenna types listed above with the maximum permissible gain and required antenna impedance for each antenna type indicated. Antenna types not included in this list, having a gain greater than the maximum gain indicated for that type, are strictly prohibited for use with this device.

Professional installation instruction

Please be advised that due to the unique function supplied by this product, the device is intended for use with our software and licensed third-party only. The product will be distributed through controlled distribution channel and installed by trained professional and will not be sold directly to the general public through retail store.

1 Installation personnel: This product is designed for specific application and needs to be installed by a qualified personal who has RF and related rule knowledge. The general user shall not attempt to install or change the setting.

2 Installation location: The product shall be installed at a location where the radiating antenna can be kept 30 cm from nearby person in normal operation condition to meet regulatory RF exposure requirement.

3 External antenna: Use only the antennas which have been approved by the applicant. The non-approved antenna(s) may produce unwanted spurious or excessive RF transmitting power which may lead to the violation of FCC/IC limit and is prohibited.

4 Installation procedure: Refer to the *BelAir20EO and AP 511x Series Quick Install Guide*, *1/006 92-LZA 101 803* for details.

5 Warning: Please carefully select the installation location and make sure that the final output power does not exceed the limit set force in relevant rules. The violation of the rule could lead to serious federal penalty.

Ce dispositif est conforme à la norme CNR-210 d'Industrie Canada applicable aux appareils radio exempts de licence. Son fonctionnement est sujet aux deux conditions suivantes: (1) le dispositif ne doit pas produire de brouillage préjudiciable, et (2) ce dispositif doit accepter tout brouillage reçu, y compris un brouillage susceptible de provoquer un fonctionnement indésirable.

NOTE IMPORTANTE:

Déclaration d'exposition aux radiations:

Cet équipement est conforme aux limites d'exposition aux rayonnements IC établies pour un environnement non contrôlé. Cet équipement doit être installé et utilisé avec un minimum de 30 cm de distance entre la source de rayonnement et d’un corps humain.

Avertissement:

Ce dispositif a été conçu pour fonctionner avec une antenne ayant un gain maximal de 12 dB. Une antenne à gain plus élevé est strictement interdite par les règlements d'Industrie Canada. L'impédance d'antenne requise est de 50 ohms.

Table 2 Antennes pour BelAir20EO and AP 511x series

Type	Gain	Marque	Fabricant
Antenne omnidirectionnelle interne	4.4 dBi	Ericsson	Ericsson
Internal omni directionnelle antenna	6.7 dBi	Ericsson	Ericsson
Antenne directionnelle interne	8 dBi	Ericsson	Ericsson
Antenne directionnelle interne	11.5 dBi	Ericsson	Ericsson
Antenne directionnelle interne	12 dBi	Ericsson	Ericsson
Antenne directionnelle externe	8 dBi	Ericsson	Ericsson
Antenne directionnelle externe	11.5 dBi	Ericsson	Ericsson

Conformément à la réglementation d'Industrie Canada, le présent émetteur radio peut fonctionner avec une antenne d'un type et d'un gain maximal (ou inférieur) approuvé pour l'émetteur par Industrie Canada. Dans le but de réduire les risques de brouillage radio-électrique à l'intention des autres utilisateurs, il faut choisir le type d'antenne et son gain de sorte que la puissance isotrope rayonnée équivalente (p.i.r.e.) ne dépasse pas l'intensité nécessaire à l'établissement d'une communication satisfaisante.

Le présent émetteur radio a été approuvé par Industrie Canada pour fonctionner avec les types d'antenne énumérés ci-dessus et ayant un gain admissible maximal et l'impédance requise pour chaque type d'antenne. Les types d'antenne non inclus dans cette liste, ou dont le gain est supérieur au gain maximal indiqué, sont strictement interdits pour l'exploitation de l'émetteur.

Instructions d'installation professionnelle

Veuillez noter que l'appareil étant dédié à une fonction unique, il doit être utilisé avec notre logiciel. Ce produit sera proposé par un réseau de distribution controlé et installé par des professionnels; il ne sera pas proposé au grand public par le réseau de la grande distribution.

1 Installation: Ce produit est destiné à un usage spécifique et doit être installé par un personnel qualifié maitrisant les radiofréquences et les règles s'y rapportant. L'installation et les réglages ne doivent pas être modifiés par l'utilisateur final.

2 Emplacement d'installation: En usage normal, afin de respecter les exigences réglementaires concernant l'exposition aux radiofréquences, ce produit doit être installé de façon à respecter une distance de 30 cm entre l'antenne émettrice et les personnes.

3 Antenne externe: Utiliser uniquement les antennes approuvées par le fabricant. L'utilisation d'autres antennes peut conduire à un niveau de rayonnement essentiel ou non essentiel dépassant les niveaux limites définis par FCC/IC, ce qui est interdit.

4 Procédure d'installation: Consulter le manuel d’installation rapide.

5 Avertissement: Choisir avec soin le lieu d'installation et s'assurer que la puissance de sortie ne dépasse pas les limites en vigueur. La violation de cette règle peut conduire à de sérieuses pénalités fédérales.

5 Manufacturer's European Community Conformity Statement

Table 3 European Community Conformity Statement

Language	Statement
English	This equipment is in compliance with the essential requirements and other relevant provisions of Directive 1999/5/EC.
Deutsch	Dieses Gerät entspricht den grundlegenden Anforderungen und den weiteren entsprecheneden Vorgaben der Richtlinie 1999/5/EU.
Dansk	Dette udstyr er i overensstemmelse med de væsentlige krav og andre relevante bestemmelser i Directiv 1999/5/EF.
Español	Este equipo cumple con los requisitos esenciales asi como con otras disposiciones de la Directiva 1999/5/EC.
Français	Cet appareil est conforme aux exigences essentielles et aux autres dispositions pertinentes de la Directive 1999/5/EC.
Íslenska	Þessi búnaður samrýmist lögboðnum kröfum og öðrum ákvæðum tilskipunar 1999/5/ESB.
Italiano	Questo apparato conforme ai requisiti essenziali ed agli altri principi sanciti dalla Direttiva 1999/5/EC.
Nederlands	Deze apparatuur voldoet aan de belangrijkste eisen en andere voorzieningen van richtlijn 1999/5/EC.
Norsk	Dette utstyret er i samsvar med de grunnleggende krav og andre relevante bestemmelser i EU-directiv 1999/5/EC.
Português	Este equipamento satisfaz os requisitos essenciais e outras provisões da Directiva 1999/5/EC.
Suomalainen	Tämä laite täyttää direktiivin 1999/5/EY oleelliset vaatimukset ja on siinä asetettujen muidenkin ehtojen mukainen.
Svenska	Denna utrustning är i överensstämmelse med de väsentliga kraven och andra relevanta bestämmelser i Direktiv 1999/5/EC.

The Declaration of Conformity related to this product can be found by contacting Ericsson.

The BelAir20EO and AP 511x series AP complies with the following EU Radio standards:

- *EN 300 328 V1.4.1 (2003-04) and EN300 328-2 V1.2.1 (2001-12) Electromagnetic compatibility and Radio spectrum Matters (ERM); Wideband Transmission systems; Data transmission equipment operating in the 2,4 GHz ISM band and using spread spectrum modulation techniques; Harmonized EN covering essential requirements under article 3.2 of the R&TTE Directive.*

- *EN 300 440-2 V1.1.1 (2001-09) Electromagnetic compatibility and Radio spectrum Matters (ERM); Short range devices; Radio equipment to be used in the 1 GHz to 40 GHz frequency range; Part 2: Harmonized EN under article 3.2 of the R&TTE Directive.*

- *EN 300 440-2 V1.1.2 (2004-07) Electromagnetic Compatibility and Radio spectrum Matters (ERM); Short range devices; Radio equipment to be used in the 1GHz to 40 GHz frequency range; Part 2: Harmonized EN under article 3.2 of the R&TTE Directive.*

- *EN 301 893 V1.4.1 (2007-07) Broadband Radio Access Networks (BRAN); 5 GHz high performance RLAN; Harmonized EN covering essential requirements of article 3.2 of the R&TTE Directive*

- *EN 300 328 V1.6.1 (2004-11) Electromagnetic compatibility and Radio spectrum Matters (ERM); Wideband Transmission systems; Data transmission equipment operating in the 2,4 GHz ISM band and using spread spectrum modulation techniques; Harmonized EN covering essential requirements under article 3.2 of the R&TTE Directive*.

- *UK Interface Requirement 2005 UK Radio Interface Requirement for Wideband Transmission Systems operating in the 2.4 GHz ISM Band and Using Wide Band Modulation Techniques* (November 2006).

- *UK Interface Requirement 2006 Wireless Access Systems (WAS) including RLANs operating in the 5150-5725 MHz band (Version 3.0)* 98/34/EC Notification number: 2006/421/UK Published 14 November 2006

- *UK Interface Requirement 2007 Fixed Broadband Services operating in the 5725 -5850 MHz band (Version 3.0)* 98/34/EC Notification Number: 2006/422/UK Published 30 May 2007

The BelAir20EO and AP 511x series AP complies with the following EU EMC standards:

- *EN 301 489-17 V1.2.1 (2002-08) ElectroMagnetic Compatibility and Radio Spectrum Matters (ERM); ElectroMagnetic Compatibility (EMC) Standard for Radio Equipment and Services; Part 17: Specific Conditions for 2.4 GHz Wideband Transmission Systems and 5 GHz High Performance RLAN Equipment*

The BelAir20EO and AP 511x series AP complies with the following EU Safety standards:

- *EN 60825-2:2000* – Safety of Optical Fibre Communication Systems

- *EN 60950:2000* – Safety of Information Technology Equipment
- *IEC 60950:2005 Second Edition* and/or *EN 60950-1:2006*

The following CE mark is affixed to the BelAir20EO and AP 511x series AP:

Note: This equipment is intended to be used in all EU and EFTA countries. Outdoor use may be restricted to certain frequencies and/or may require a license for operation – for example in France the frequencies 2454-2483.5 MHz are restricted to 10 mW effective isotropic radiated power (EIRP) in outdoor environments, so channels 8-13 require reduced power. For more details, contact Ericsson.

6 Declaration of Conformity for RF Exposure

This Wireless LAN radio device has been evaluated under FCC Bulletin OET 65C, Health Canada Safety Code 6 and EN 62311:2008, and found to be compliant to the requirements set forth in CFR 47 Sections 2.1091, 2.1093, and 15.247 (b) (4) addressing RF exposure from radio frequency devices. This Wireless LAN radio device also conforms to EU Health and Safety Directive 2004/40/EC as per EN 50385.

This device complies with FCC RF radiation exposure limits for an uncontrolled environment. The radiated output power of this Wireless LAN device is below the FCC radio frequency exposure limits. However, this device should still be installed and used in such a manner that the potential for human contact during normal operation is minimized.

Warning!

In order to comply with RF exposure limits established in the ANSI C95.1 standard, this equipment should be installed and operated at a minimum distance of 12 inches (30 cm) between the radiator and a human body.

This transmitter must not be colocated or operating in conjunction with any other antenna or transmitter.

The availability of some specific channels and/or operational frequency bands are country dependent and are firmware programmed at the factory to match the intended destination. The firmware setting is not accessible by the end user.

7 Product Disposal

Ericsson adheres to directive 2002/96/EC of the European Parliament and the council of 27 January 2003 on Waste Electrical and Electronic Equipment (WEEE).

To dispose of equipment, including batteries, contact Ericsson customer service to get a Return Material Authorization (RMA) number and shipping instructions.

7.1 Mise au rebut du produit

Ericsson se conforme à la directive 2002/96/EC du Parlement européen et du Conseil de l'Europe du 27 janvier 2003 relative à la destruction des déchets d'équipements électriques et électroniques (DEEE).

Si vous souhaitez vous débarrasser de l'équipement, y compris des piles, veuillez communiquer avec le service à la clientèle de Ericsson, afin d'obtenir un numéro d'autorisation de retour du matériel et des instructions sur les modalités d'expédition.

7.2 Produktentsorgung

Ericsson erfüllt die Anforderungen der Richtlinie 2002/96/EG des Europäischen Parlaments und des Rates vom 27. Januar über Elektro- und Elektronik-Altgeräte (Waste Electrical and Electronic Equipment = WEEE).

Für die Entsorgung von Geräten, einschließlich Batterien, wenden Sie sich bitte an den Kundendienst von Ericsson, um eine RMA-Nummer (Rücksendenummer) und die Versandanweisungen zu erhalten.

7.3 Verwijdering van het product

Ericsson volgt Richtlijn 2002/96/EG van het Europese Parlement en de Raad van 27 januari 2003 betreffende afgedankte elektrische en elektronische apparatuur (AEEA).

Voor het verwijderen van apparatuur, met inbegrip van batterijen, neemt u contact op met Ericsson klantenservice voor een retournummer (RMA) en verzendinstructies.

7.4 Tuotteen hävittäminen

Ericsson noudattaa sähkö- ja elektroniikkalaiteromusta 27 päivänä tammikuuta 2003 annettua Euroopan parlamentin ja neuvoston direktiiviä 2002/96/EY.

Palauttaaksesi välineet, mukaan luettuina akut, ota yhteys Ericsson –asiakaspalveluun, niin saat RMA (Return Material Authorization) –numeron ja lähetysohjeet.

7.5 Smaltimento del prodotto

Ericsson aderisce alla direttiva 2002/96/CE del parlamento Europeo e del Consiglio d'Europa del 27 gennaio 2003, sullo smaltimento degli apparecchi elettrici ed elettronici (WEEE).

Per lo smaltimento di tali apparecchi, comprese le batterie, contattare l'assistenza clienti di Ericsson per ottenere un numero di autorizzazione alla restituzione del materiale da smaltire (Return Material Authorization - RMA) e le istruzioni per la spedizione.

7.6 Produktbortskaffelse

Ericsson overholder direktivet 2002/96/EC fra Europa-Parlamentet og -Rådet dateret den 27. januar 2003 om Waste Electrical and Electronic Equipment (WEEE) (Affald af elektrisk og elektronisk udstyr).

For at bortskaffe udstyr, samt batterier, kontakt kundeservicen hos Ericsson for at få et Return Material Authorization (RMA)-nummer (returneringstilladelsesnummer) og forsendelsesinstruktioner.

7.7 Eliminação do produto

A Ericsson cumpre a Directiva 2002/96/CE do Parlamento Europeu e do Conselho, de 27 de Janeiro de 2003, relativa aos Resíduos de Equipamentos Eléctricos e Electrónicos (REEE).

Para proceder à eliminação do equipamento, incluindo as baterias, é favor contactar a assistência ao cliente da Ericsson para obter um número de Autorização de Devolução do Material (RMA – Return Material Authorization) e as instruções relativas ao envio.

7.8 Eliminación del producto

Ericsson cumple con la directiva 2002/96/EC del Parlamento Europeo y del Consejo de 27 de enero de 2003 sobre los residuos de aparatos eléctricos y electrónicos (RAEE).

Para la eliminación de equipo, incluyendo las pilas, contacte con el servicio de atención al cliente de Ericsson y obtenga el número de una Autorización de Devolución de Material (RMA) y las instrucciones para la expedición.