SIMRAD

Halo® Pulse Compression Radar

Installation Manual

ENGLISH

Draft_08_April_2015

simrad-yachting.com

Draft_08_April_2015

Preface

As Navico is continuously improving this product, we retain the right to make changes to the product at any time which may not be reflected in this version of the manual. Please contact your nearest distributor if you require any further assistance.

It is the owner's sole responsibility to install and use the instrument and transducers in a manner that will not cause accidents, personal injury or property damage. The user of this product is solely responsible for observing safe boating practices.

NAVICO HOLDING AS AND ITS SUBSIDIARIES, BRANCHES AND AFFILIATES DISCLAIM ALL LIABILITY FOR ANY USE OF THIS PRODUCT IN A WAY THAT MAY CAUSE ACCIDENTS, DAMAGE OR THAT MAY VIOLATE THE LAW.

Governing Language: This statement, any instruction manuals, user guides and other information relating to the product (Documentation) may be translated to, or has been translated from, another language (Translation). In the event of any conflict between any Translation of the Documentation, the English language version of the Documentation will be the official version of the Documentation.

This manual represents the product as at the time of printing. Navico Holding AS and its subsidiaries, branches and affiliates reserve the right to make changes to specifications without notice.

Draft_08_April_2015

Copyright

Copyright © 2015 Navico Holding AS.

Warranty

The warranty card is supplied as a separate document.

In case of any queries, refer to the brand web site of your display or system:

www.simrad-yachting.com

Declarations and conformance

This equipment is intended for use in international waters as well as coastal sea areas administered by countries of the E.U. and E.E.A.

Compliance Statements

The Simrad Halo® pulse compression radar,

* Comply with CE under R&TTE directive 1999/5/EC.

* The relevant Declaration of Conformity is available in the following website under model documentation section:

www.simrad-yachting.com

FCC Warning Statement

FCC Part 15.19 Warning Statement

THIS DEVICE COMPLIES WITH PART 15 OF THE FCC RULES. OPERATION IS SUBJECT TO THE FOLLOWING TWO CONDITIONS: (1) THIS DEVICE MAY NOT CAUSE HARMFUL INTERFERENCE, AND (2) THIS DEVICE MUST ACCEPT ANY INTERFERENCE RECEIVED, INCLUDING INTERFERENCE THAT MAY CAUSE UNDESIRED OPERATION.

FCC Part 15.21 Warning Statement

NOTE: NAVICO INC. IS NOT RESPONSIBLE FOR ANY CHANGES OR MODIFICATIONS NOT EXPRESSLY APPROVED BY THE PARTY RESPONSIBLE FOR COMPLIANCE. SUCH MODIFICATIONS COULD VOID THE USER'S AUTHORITY TO OPERATE THE EQUIPMENT.

FCC Part 15.105(b) Warning Statement

NOTE: This equipment has been tested and found to comply with the limits for a Class B digital device, pursuant to part 15 of the FCC Rules. These limits are designed to provide reasonable protection against harmful interference in a residential installation. This equipment generates, uses and can radiate radio frequency energy and, if not installed and used in accordance with the instructions, may cause harmful interference to radio communications. However, there

is no guarantee that interference will not occur in a particular installation. If this equipment does cause harmful interference to radio or television reception, which can be determined by turning the equipment off and on, the user is encouraged to try to correct the interference by one or more of the following measures:

- Reorient or relocate the receiving antenna.

- Increase the separation between the equipment and receiver.

-Connect the equipment into an outlet on a circuit different from that to which the receiver is connected.

-Consult the dealer or an experienced radio/TV technician for help.

INDUSTRY CANADA WARNING STATEMENTS:

IC RSS-GEN, Sec 7.1.3 Warning Statement

ENGLISH:

This device complies with Industry Canada license-exempt RSS standard(s). Operation is subject to the following two conditions: (1) this device may not cause interference, and (2) this device must accept any interference, including interference that may cause undesired operation of the device.

FRENCH:

Le présent appareil est conforme aux CNR d'Industrie Canada applicables aux appareils radio exempts de licence. L'exploitation est autorisée aux deux conditions suivantes : (1) l'appareil ne doit pas produire de brouillage, et (2) l'utilisateur de l'appareil doit accepter tout brouillage radioélectrique subi, même si le brouillage est susceptible d'en compromettre le fonctionnement.

Draft_08_April_2015

IC RSS-GEN, Sec 7.1.2 Warning Statement

ENGLISH:

Under Industry Canada regulations, this radio transmitter may only operate using an antenna of a type and maximum (or lesser) gain approved for the transmitter by Industry Canada. To reduce potential radio interference to other users, the antenna type and its gain should be so chosen that the equivalent isotropically radiated power (e.i.r.p.) is not more than that necessary for successful communication.

FRENCH:

Conformément à la réglementation d'Industrie Canada, le présent émetteur radio peut fonctionner avec une antenne d'un type et d'un gain maximal (ou inférieur) approuvé pour l'émetteur par Industrie Canada. Dans le but de réduire les risques de brouillage radioélectrique à l'intention des autres utilisateurs, il faut choisir le type d'antenne et son gain de sorte que la puissance isotrope rayonnée quivalente (p.i.r.e.) ne dépassepas l'intensité nécessaire à l'établissement d'une communication satisfaisante.

IC RSS-GEN, Sec 7.1.2 Warning Statement

ENGLISH:

This radio transmitter – Halo™ Pulse Compression Radar – (4697A-HALO) has been approved by Industry Canada to operate with the antenna types listed below with the maximum permissible gain and required antenna impedance for each antenna type indicated. Antenna types not included in this list, having a gain greater than the maximum gain indicated for that type, are strictly prohibited for use with this device.

FRENCH:

Le présent émetteur radio – Halo™ Pulse Compression Radar – (4697A-HALO) a été approuvé par Industrie Canada pour fonctionner avec les types d'antenne énumérés ci-dessous et ayant un gain admissible maximal et l'impédance requise pour chaque type d'antenne. Les types d'antenne non inclus dans cette liste, ou dont le gain est supérieur au gain maximal indiqué, sont strictement interdits pour l'exploitation de l'émetteur.

Halo Antennas:	Description:	Max. permissible antenna gain (dBi):	Impedance:
000-11464-001	Antenna, 3ft, Halo	26	50 Ohm (WR-90 Waveguide)
000-11465-001	Antenna, 4ft, Halo	27.2	50 Ohm (WR-90 Waveguide)
000-11466-001	Antenna, 6ft, Halo	29	50 Ohm (WR-90 Waveguide)

CE Compliance Statement

Countries of intended use in the EU:

AT - Austria
BE - Belgium
BG - Bulgaria
CY - Cyprus
CZ - Czech Republic
DK - Denmark
EE - Estonia
FI - Finland
FR - France
DE - Germany
GR - Greece
HU - Hungary
IS - Iceland
IE - Ireland
IT - Italy
LI - Liechtenstein
LV - Latvia
LT - Lithuania
LU - Luxembourg
MT - Malta
NL - Netherlands
NO - Norway
PL - Poland
PT - Portugal
RO - Romania
SK - Slovakia
SI - Slovenia
ES - Spain
SE - Sweden
CH - Switzerland
TR - Turkey
UK - United Kingdom

→ ***Note:*** Most countries accept that RF power density levels below 100 W/m2 cause no significant RF hazard.

Radio Frequency (RF) Exposure Information

Calculations for radar systems in table below show that the safe distance (for a rotating antenna) is within the antenna's turning circle. Irrespective, users should stay well outside the turning circle of the antenna to avoid injury through impact as it spins

System	100 W /m2 or power at Antenna face	50 W /m2 (measurement distance, cm)	10 W /m2 (measurement distance, cm)	2.5 W /m2 (measurement distance, cm)

Trademarks

- NMEA 2000 is a registered trademark of the National Marine Electronics Association
- Simrad is a trademark of Kongsberg Maritime AS Company registered in the US and other countries and is being used under license
- B&G, Lowrance, StructureScan, Navico, SonicHub, SimNet, Skimmer, InsightHD, Halo Pulse Compression Radar, Broadband Radar and Broadband Sonar are trademarks of Navico, registered in the US and other countries

About this manual

This manual is a reference guide for installing the Simrad Halo pulse compression radar.

The manual does not cover basic background information about how equipment such as radars, echosounders and AIS work. Such information is available from our web site:

www.support.simrad-yachting.com

Important text that requires special attention from the reader is emphasized as follows:

→ ***Note:*** Used to draw the reader's attention to a comment or some important information.

⚠ **Warning:** Used when it is necessary to warn personnel that they should proceed carefully to prevent risk of injury and/or damage to equipment/personnel.

.

Draft_08_April_2015

FCC labels

Halo Pedestal

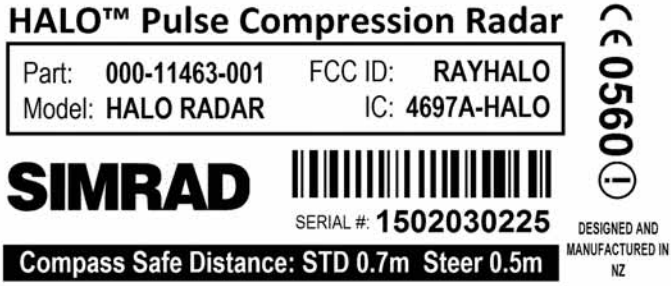

Halo Antenna

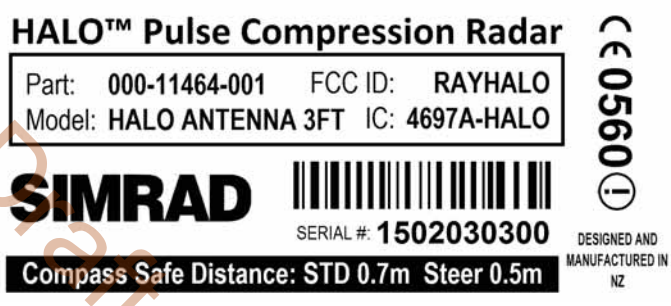

Halo 4ft Antenna

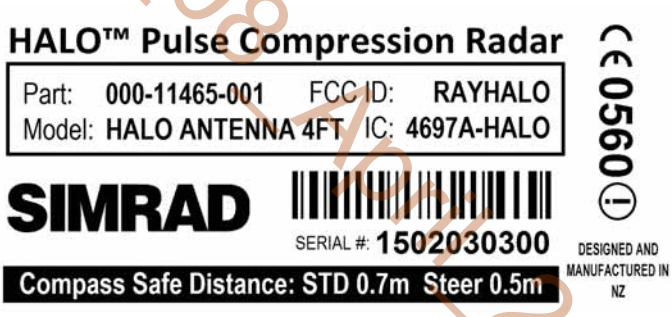

Halo 6ft Antenna

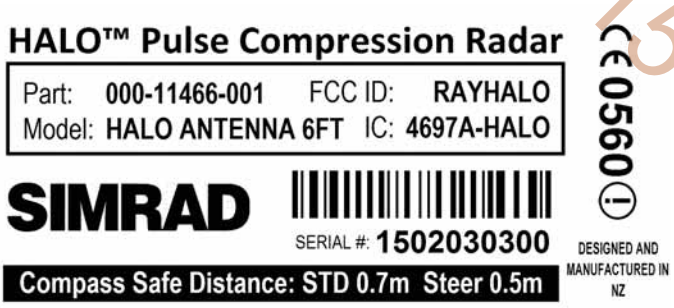

Halo RI-12 Interface module

Draft_08_April_2015

Contents

3 Introduction

4 Check the parts
4 Pedestal
5 Antenna
5 RI-12 Radar interface module

6 Tools required

7 Installation Guidelines
8 Compass safe distance
8 Multi-radar installations
8 Power boat installations
9 Considerations for direct roof mounting

10 Hardware mounting
10 Install the RI-12 radar Interface module
11 Mount the pedestal
15 Fitting the antenna to the pedestal

16 Wiring
17 RI-12 connections
18 LED Indicator lights
18 Pedestal Interconnection cable
21 Grounding requirements
22 Remote power control
23 Network
24 NMEA2000
25 NMEA 0183
25 RI-12 heading source selection:
25 Antenna park

26 Setup and configuration
26 Entering radar setup on your display
26 Select the antenna length
27 Adjust antenna height...
27 Adjust bearing alignment...
28 Sector blanking
28 Adjust open array park angle
28 Sidelobe suppression...
29 Radar Status
29 Reset Radar to factory defaults
30 Control pedestal accent lighting

31 Specifications

33 Drawings
33 RI-12
34 Pedestal and antennas

36 Spare Parts
37 Service parts
39 Third party mounting options

40 Trouble shooting

Draft_08_April_2015

Draft_08_April_2015

1 Introduction

This manual explains how to install the Halo® Pulse Compression Radar system. This manual should be used in conjunction with the installation manual provided with the display.

This manual is written for professional marine technicians, installation technicians, and service technicians. Dealers may use information contained in this document.

The radar system is intended for use in a marine environment. The radar system consists of a pedestal, antenna, RI-12 radar interface and connection cables. An Ethernet network cable is used to connect the RI-12 radar interface module to the navigation Ethernet network.

Antennas are available in three sizes 3ft, 4ft and 6ft to suit customer requirements.

The radar must be installed by a qualified radar technician.

Warnings

Warning: Use the radar at your own risk. Your radar is designed as a navigation aid. It should not be used for purposes that require precise measurements of direction, distance, topography or location. Always compare the navigation information received from your radar with data from other navigation aids and sources. When a conflict arises between the navigation data from your radar and data from other navigation aids, make sure you resolve the conflict before proceeding with navigation.

A CAREFUL NAVIGATOR NEVER RELIES ON ONLY ONE METHOD TO OBTAIN NAVIGATION INFORMATION.

International Regulations for Preventing Collisions at Sea mandate that when radar is on a vessel, the radar must be used at all times, regardless of weather conditions or visibility. Numerous court decisions have ruled that the radar must be used, and the radar operator must know all operational aspects of radar performance. Otherwise they will face a greater risk of liability if an accident occurs.

Warning: High Voltage Hazard . There are high voltages present within the radar scanner unit.

Technicians must exercise extreme care when working inside the unit. ALWAYS remove power before removing the cover. Some capacitors may take several minutes to discharge, even after switching off the radar. Before touching any high voltage components, ground them with a clip lead.

Warning: Halo™ Pulse Compression Radar's blue 4 level static accent pedestal lighting may not be approved for use in your boating location. Please check your local boating regulations before turning the blue accent lights ON.

Warning: The microwave energy radiated by a radar antenna is harmful to humans, especially to the eyes. NEVER look directly into an open waveguide or into the path of radiation from an enclosed antenna. Radar and other radio frequency radiation can upset cardiac pacemakers. If someone with a cardiac pacemaker suspects abnormal operation, immediately turn off the radar equipment and move the person away from the antenna. Turn off the radar whenever it is necessary to work on the antenna unit or other equipment in the beam of the radar.

Draft 08 - April - 2015

2 Check the parts

Pedestal

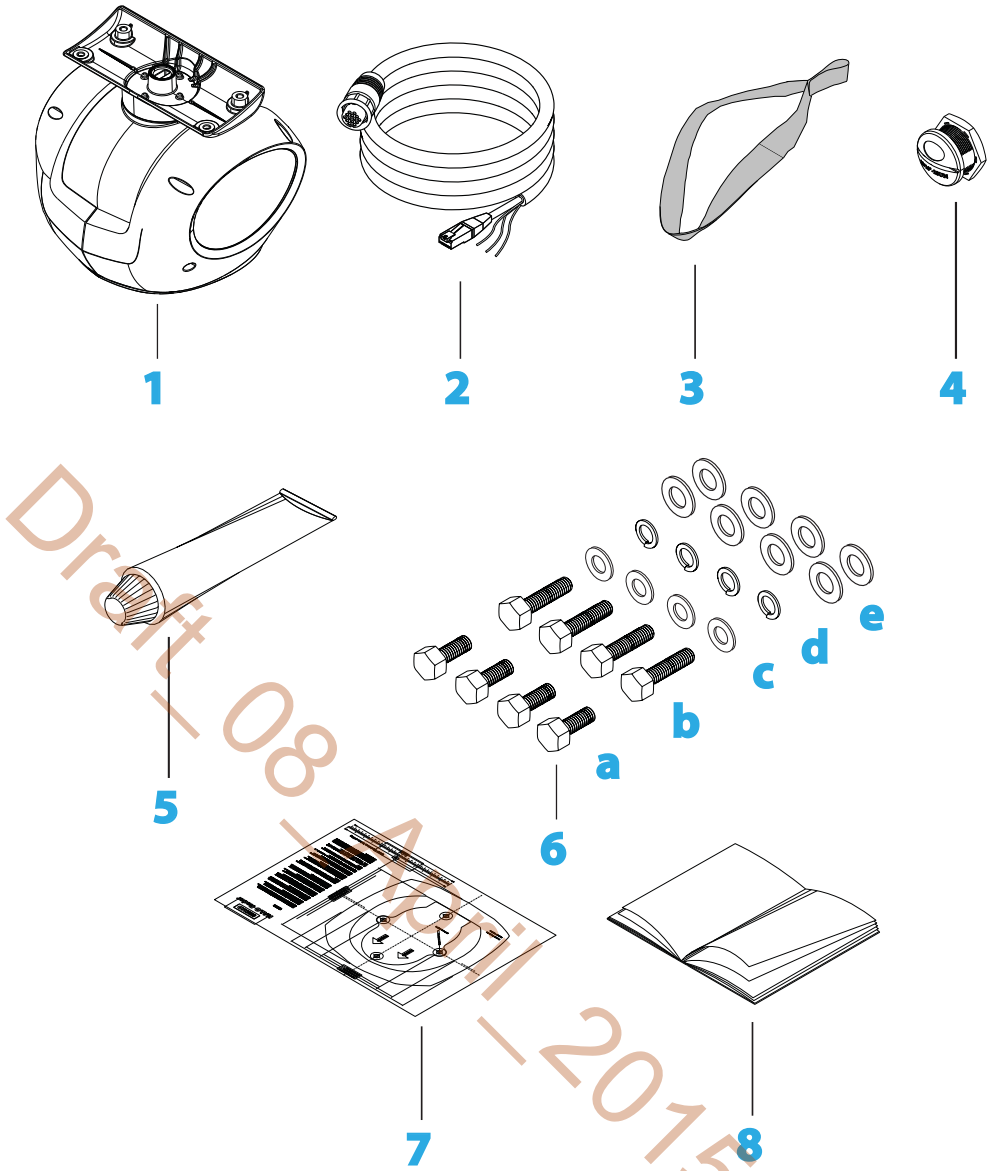

Draft_08_April_2015

1	Radar pedestal	
2	Interconnection cable 20 m (65 ft) (other lengths available)	
3	Lifting strap	
4	Blanking plug (used when interconnection cable connected underneath the pedestal. Blanking plug is fitted underneath when shipped)	
5	Anti-seize grease	
6	Mounting Bolts and washers	
	a) Bolts, hex head, M12 x 35 mm, 316 s/s	x 4
	b) Bolts, hex head , M12 x 50 mm, 316 s/s	x4
	c) Flat washer, M12 x 36 x 3, 316 s/s	x4
	d) Spring washer, M12, 316 s/s	x4
	e) Isolating washer, M12 x 38	x8
8	Drill template	
9	This manual	

Antenna

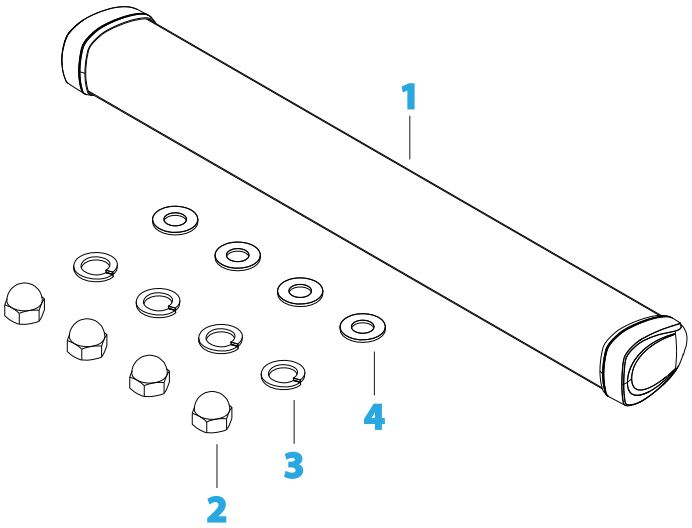

Key	Description	
1	Radar antenna.	3 ft (3.70 ft Antenna 1127 mm (44.37”)) 4 ft (4.70 ft Antenna 1431 mm (56.34”)) 6 ft (6.69 ft Antenna 2038 mm (80.24”))
2	Dome nuts, M8, 316 s/s	
3	Spring washer, M8, 316 s/s	
4	Flat washer, M8 x16x1.2, 316 s/s	

Draft_08_April_2015

RI-12 Radar interface module

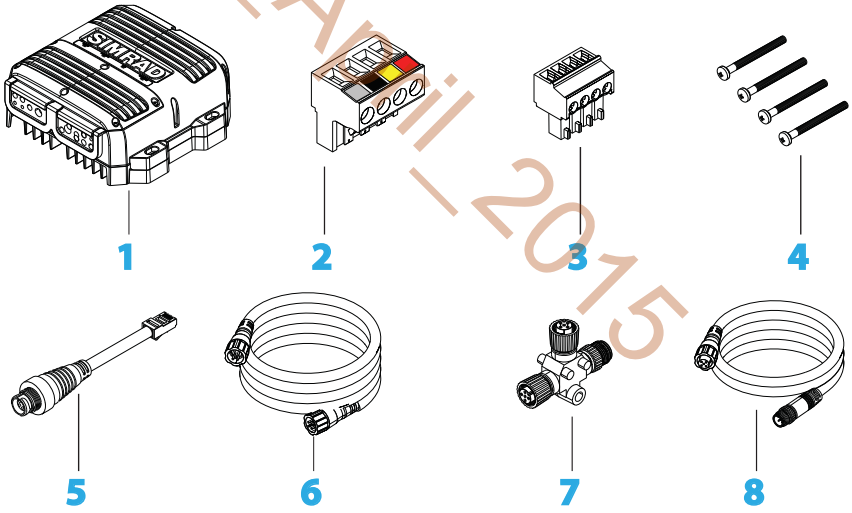

Key	Description
1	RI-12 Radar interface module
2	Connector for the pedestal interconnection cable
3	Connector for Aux In (NMEA 0183, remote power and park brake)
4	Mounting hard ware
5	Ethernet adapter. RJ45 male to 5 pin female 150 mm (5.9”)
6	Ethernet cable 1.8 m (6 ft)
7	Micro-C T Joiner
8	Micro-C drop cable 1.8 m (6 ft)

2 Tools required

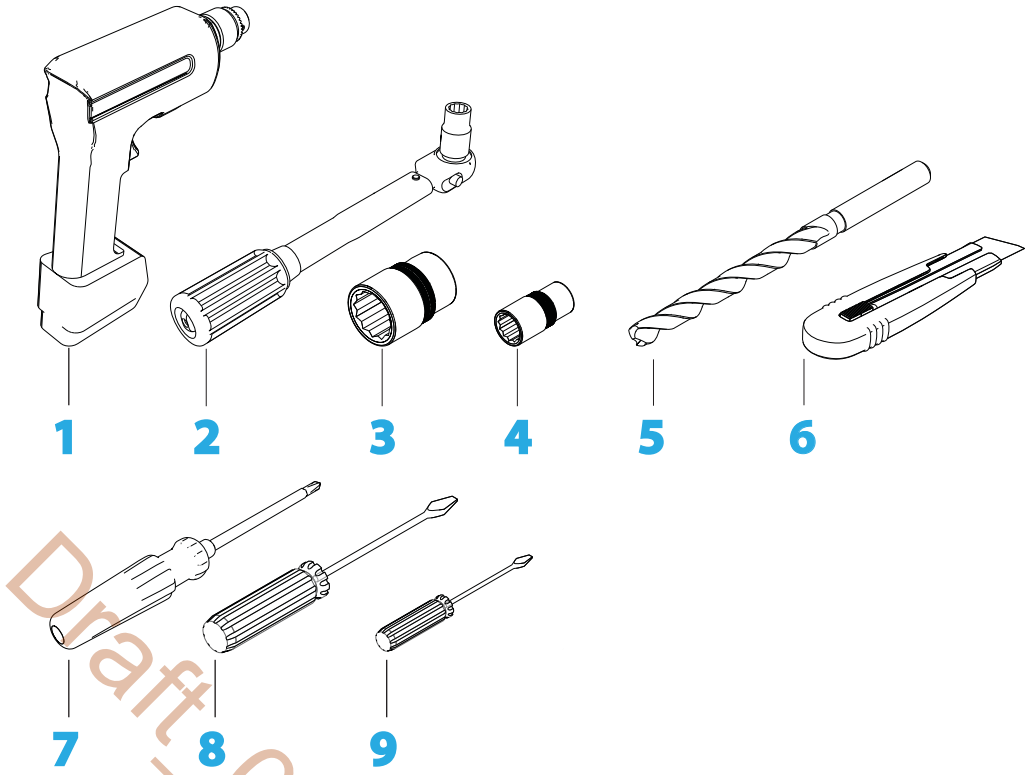

Key	Description
1	Drill
2	Torque wrench
3	19 mm socket
4	13 mm socket
5	Drill bit 12.5 mm (1/2")
6	Sharp Knife
7	Screw driver (pozidrive)
8	Screw driver (flat blade)
9	Screw driver (flat blade, small)

Draft_08_April_2015

3 Installation Guidelines

Warning: A radar unit should only be installed by a qualified marine technician, as improper installation poses risks to the installer, the public, and to the safety of the vessel.

Warning: Before commencing any installation or maintenance on the Halo radar make sure the safety switch on the rear of the pedestal is set to OFF

There is a transmit interlock that prevents radar transmissions if the scanner is not rotating. However, a high voltage remains for a period of time after the system is turned off. If you are not familiar with this type of electronics, consult with a trained service or installation technician before attempting to service any part of the equipment.

Installation includes:

- mechanical mounting
- electrical wiring
- configuring the display or network system to work with the radar
- adjusting the radar for proper performance

The radar's ability to detect targets depends greatly on the position of its scanner. The ideal location for the scanner is high above the vessel's keel line where there are no obstacles.

A higher installation position increases the radar ranging distance, but it also increases the minimum range around the vessel where targets cannot be detected.

When you're deciding on the location, please consider:

- The length of the 20 m (66 ft) interconnection cable supplied with the radar is usually sufficient. A longer 30 m (98 ft) cable is available. 30 m (98 ft) is the longest the cable that can be used.
- If the roof of the wheelhouse is the highest existing location, consider installing a radar mast or tower on which you can mount the radar. You may also need to construct a working platform for your own safety during installation and servicing work.
- If you locate the scanner on the mast, position it on the forward side so that there is a clear view to the front of the vessel.
- It is preferable to install the scanner parallel to the line of the keel.

DO NOT DO THIS!

- DO NOT install the scanner too high up, where its weight will alter the stability of the vessel and cause degrade the radar picture over short ranges.
- DO NOT install the scanner close to lamps or exhaust outlets. The heat emissions may cause the equipment to break down. Soot and smoke will degrade the performance of the radar.
- DO NOT install the scanner close to the antennas of other equipment such as direction finders, VHF antennas, GPS equipment etc, as it may cause interference.
- DO NOT install the scanner where a large obstruction (such as an exhaust stack) is at the same level as the beam. The obstruction is likely to generate false echoes and/or shadow zones. If no other alternative location use the sector blanking feature in the radar software. (see "" on page 27)
- DO NOT install the scanner where it will be subjected to strong vibrations because the vibrations could degrade the performance of the radar.
- DO NOT install an open array close to halyards or flags because the wind could wrap these around the antenna and jam it.

Draft_08_April_2015

Compass safe distance

> ⚠ **Warning:** Do not install the scanner inside of the recommended compass safe distances of any navigation instruments such as the magnetic compass and the chronometer. The compass safe distances are as follows:

Minimum distance to install near the ships compass is 0.7 m (3.3 ft).

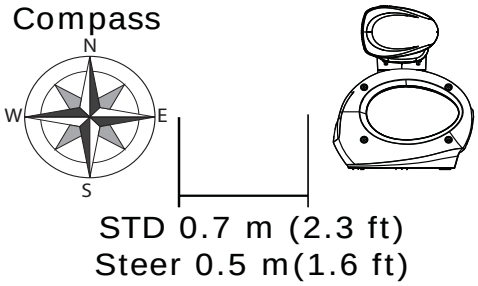

Multi-radar installations

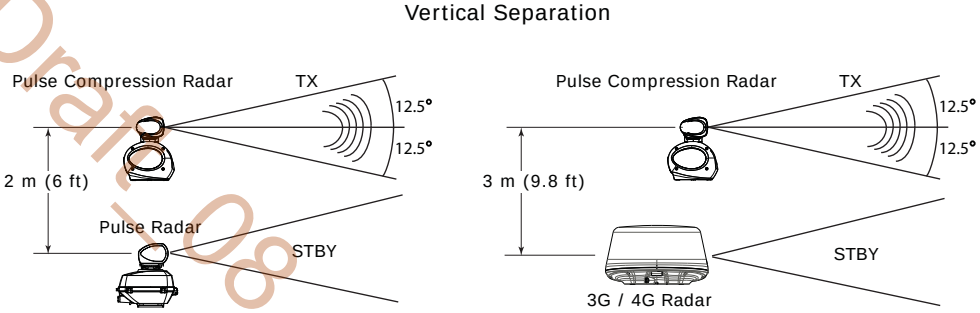

Do not install the Halo® pulse compression radar on the same beam plane as a conventional pulse radar. A pulse radar must be set to STBY or OFF any time the Halo® radar is being operated.

→ ***Note:*** Possible interference could be reduced by using the sector blanking feature (see "" on page 27)

Power boat installations

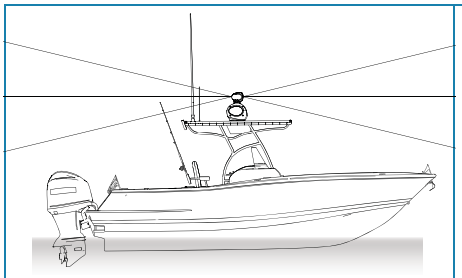	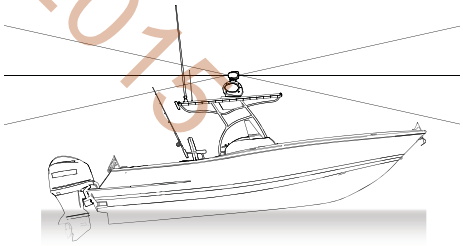
If possible ensure that the location site provides the scanner with a clear view all round the vessel.	Installations on power boats that have a steep planing angle, it is recommended to tilt the scanner angle down at the front. (Beam angle is 12.5° either side of center).

→ ***Note:*** Optional 4 degree wedge available from third party suppliers such as SeaView RW4-7

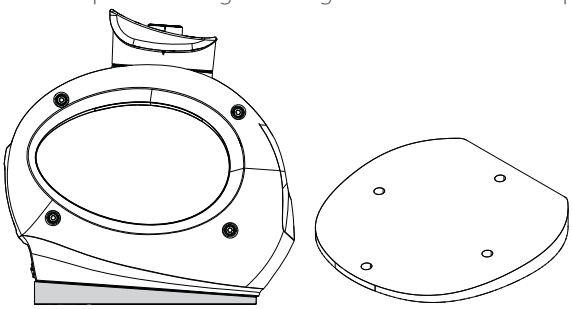

Draft_08_April_2015

Considerations for direct roof mounting

When deciding a suitable mounting location for the Halo® Pulse Compression Radar be aware that the vertical radar beam extends to 25° either side of horizontal. With 50% of the power projecting in a beam 12.5° off horizontal. If the radar beams cannot clear the roof line, this will decrease performance of the radar. Depending on the size of the hard top of the vessel, it is recommended to elevate the antenna to allow the radar beams to clear the roof line. Below are guide lines on heights above the hard top.

The below illustrates an installation with the Halo® Pulse Compression Radar mounted directly on to a large hard top. This installation could suffer decreased performance as the radar energy is either reflected or absorbed by the hard top.

→ ***Note:*** Where the mounting surface is constructed of any form of metal you must elevate the dome so that the beam has complete clearance, else performance will be severely impaired.

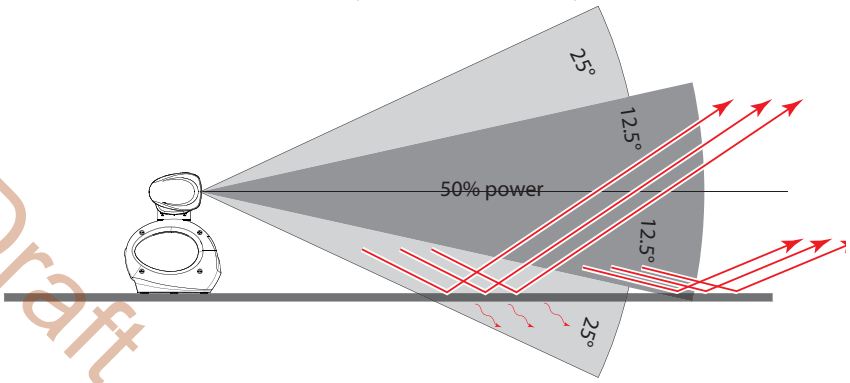

For best performance, the radar should be positioned to allow the beams to clear the superstructure of the boat.

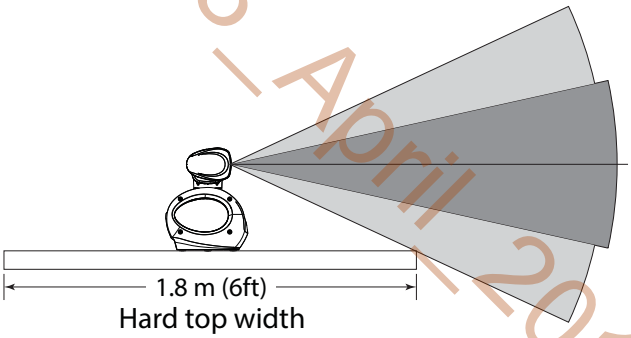

Below is a guide to determine the antenna height in relation to a vessels hard top overall width.

Every Increase of 200 mm (7.9") of hard top total width over 1.8m wide: Increase the height of the antenna by 46 mm (1.8")

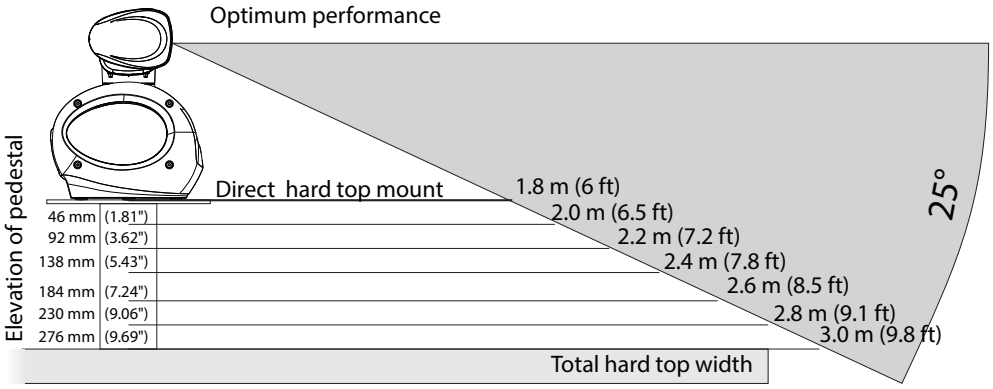

There are many radar mounting options available from third party vendors such as Seaview, Scanstrut and Edson. (see "Third party mounting options" on page 39)

Draft_08_April_2015

4 Hardware mounting

Install the RI-12 radar Interface module

Install the RI-12 in a dry location away from spray, rain, drips and condensation or excessive heat. The mounting position should be easily accessible.

Always mount the RI-12 vertically, with the cable entry points facing downwards. This is to assist in cooling and to assist stopping any possible water ingress though the cable grommets.

The RI-12 must be located where it can be easily connected to the ship's ground, the pedestal interconnection cable, the power cable and the NMEA 2000 network. Check that these cables and the ship's ground can easily reach the radar processor BEFORE you drill.

Use fasteners suited to the mounting surface material. If the material is too thin for self tappers, reinforce it, or mount the RI-12 with machine screws nuts and washers. Use only 304 or 316 stainless steel fasteners. Mark the screw locations using RI-12 box as a template, and drill pilot holes.

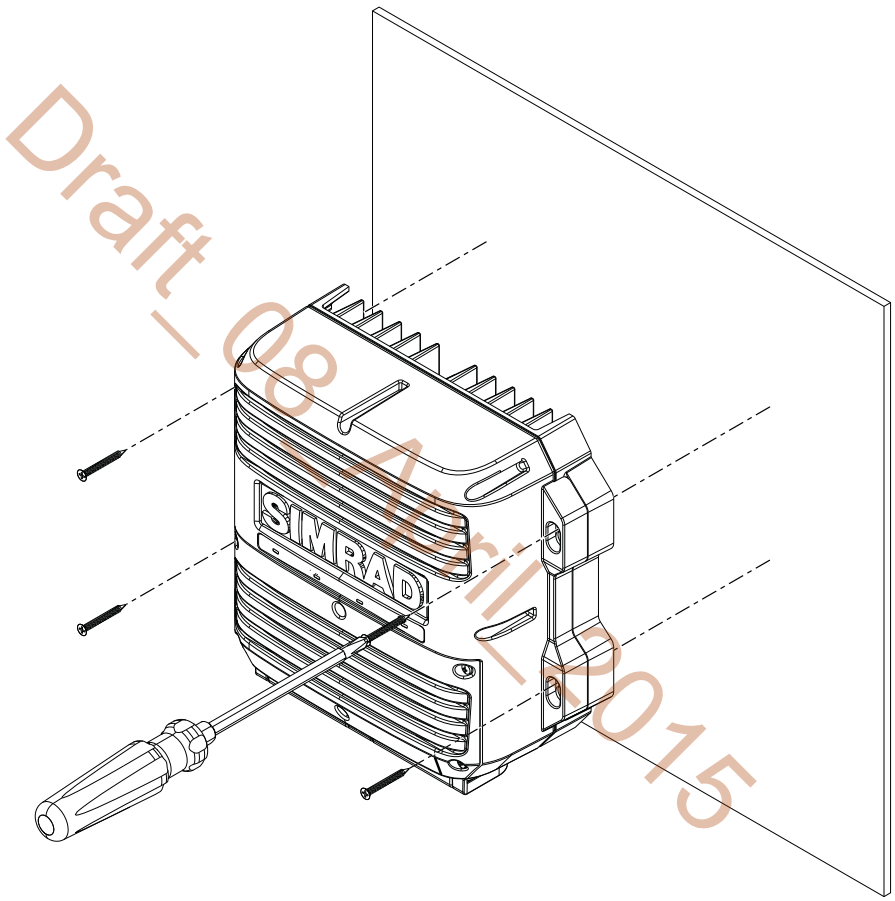

Draft_08 April_2015

Mount the pedestal

The eight hex head bolts supplied are suitable for surfaces up to 25 mm (1″) in thickness.

Use the 4 x M12 x 35 mm for a surface thickness from 5 mm (0.2″) up to 13 mm (1/2")

Use the 4 x M12 x 50 mm for surface thickness from 13 mm (1/2″) up to 25 mm (1″)

If using longer bolts make sure they are of marine grade stainless steel and allow for minimum of 12 mm (0.3″) and maximum of 20 mm (0.7″) of thread contact.

For steel boats use the supplied nylon isolating washers

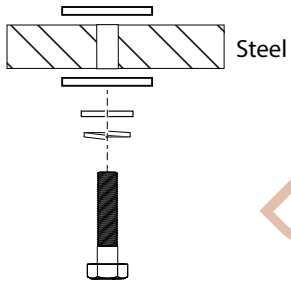

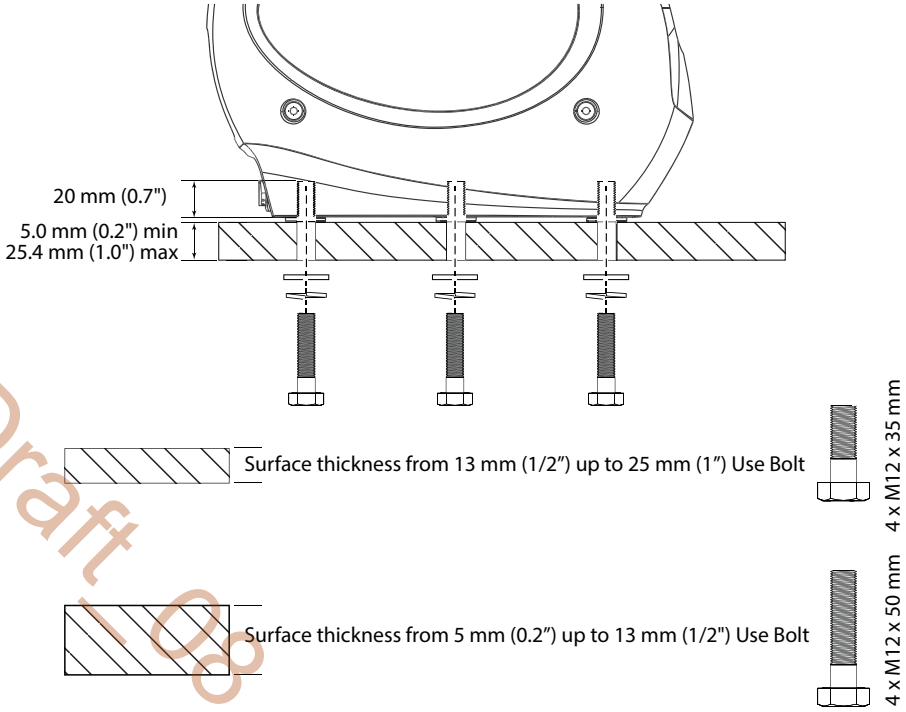

Draft 08 April 2015

1. Run the interconnection cable between the pedestal and the location of the RI-12 Interface module. The 14 pin connector end of the interconnection cable connects to the pedestal.

   → ***Note:*** Protect the connectors especially the RJ45 connector when pulling cable through the boat and avoid putting strain on to the connectors

   → ***Note:*** The interconnection cable is 9 mm in diameter. A 14 mm hole will be required in order for the RJ45 connector end to pass through to the RI-12 or 24 mm for the 14 pin connector to pass through to the pedestal..

2. Stick down the mounting template in the desired installation location, observing correct orientation. (Minor deviation can be compensated for in the radar software).

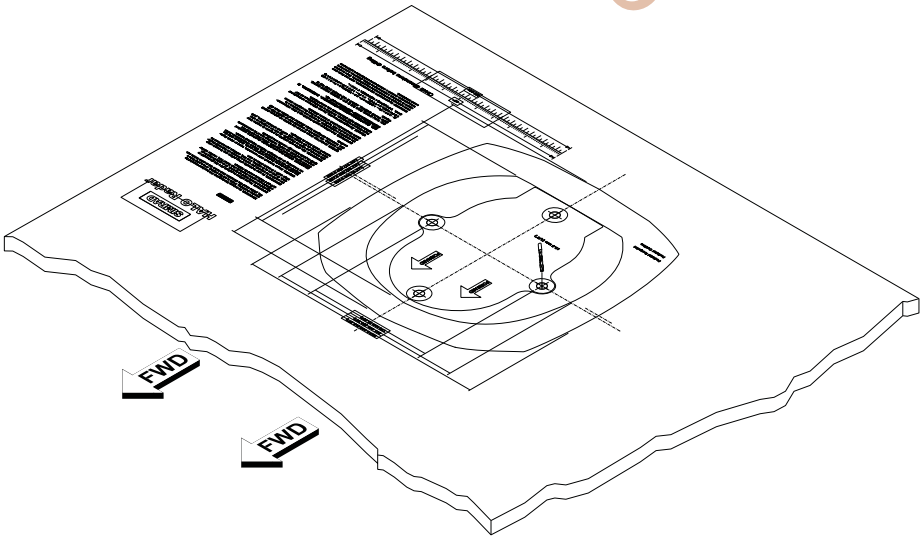

3. Drill pilot holes, Then use a 12.5 mm (1/2") drill bit to drill the four holes where shown on the mounting template.

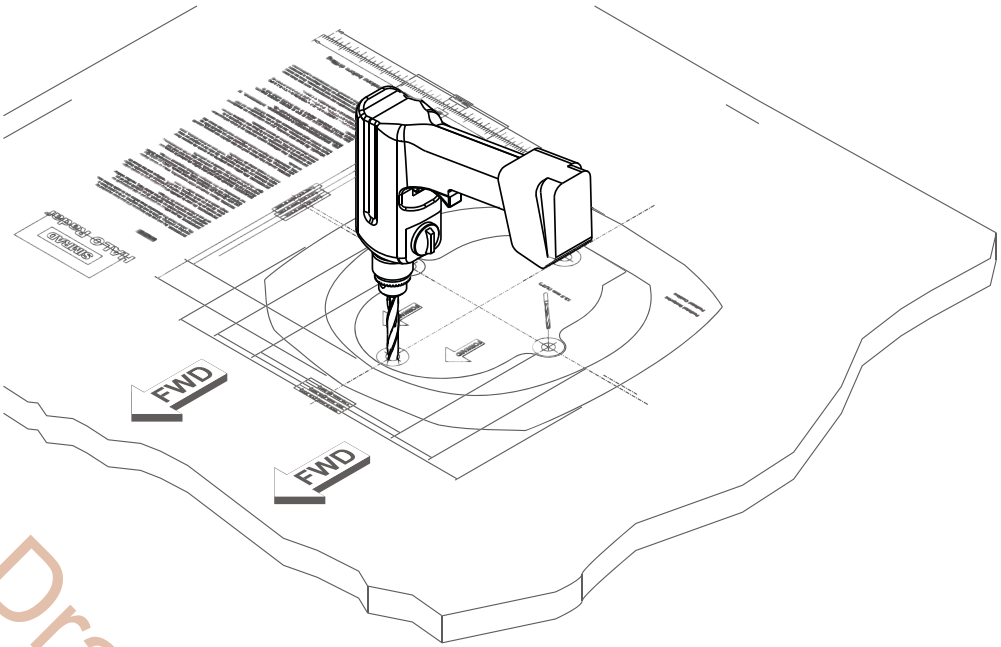

4. Remove the mounting template .
5. Lift the pedestal in to position using the supplied lifting strap.

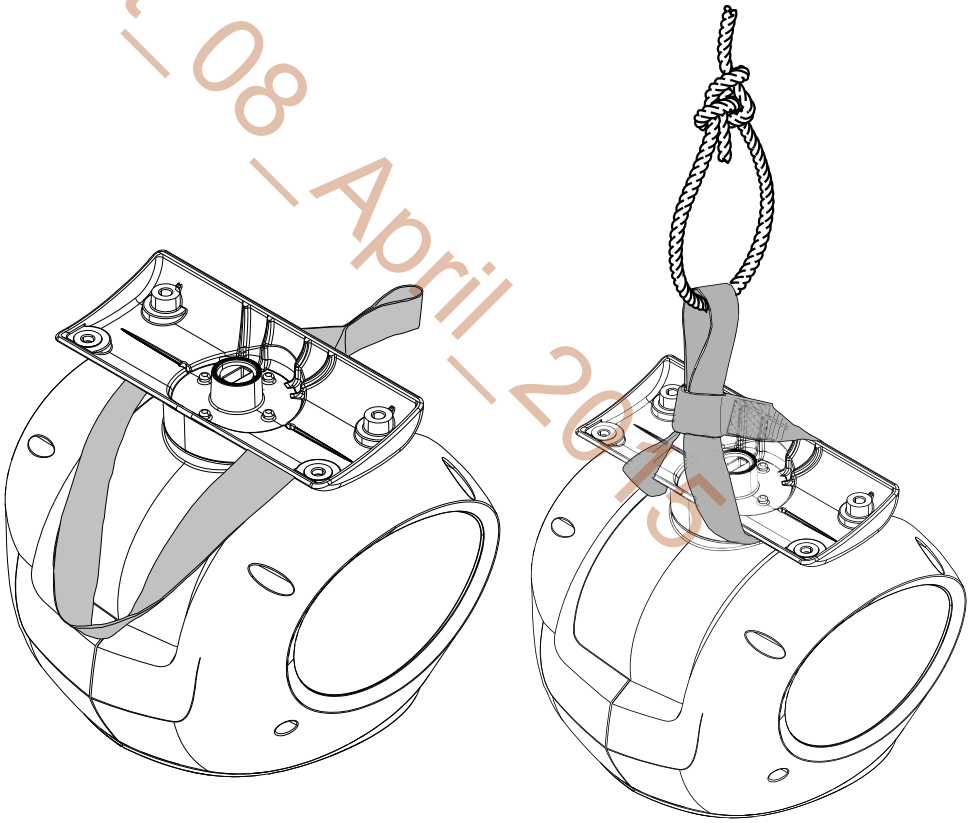

Draft_08_April_2015

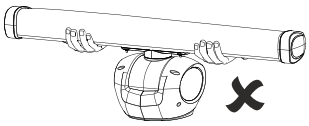

Warning: Do not lift the pedestal with the antenna attached