Surface mount: Rear cable connection

6. Position the scanner carefully over the bolt holes so that they are aligned.
7. Place a flat washer and spring washer onto each bolt, as shown.
8. Insert bolts into the drilled holes and locate into the pedestals threaded mounting holes and tighten securely.

→ ***Note:*** The torque settings for the mounting bolts are XX Nm – XX Nm (8.9 lb ft – 13.3 lb ft)

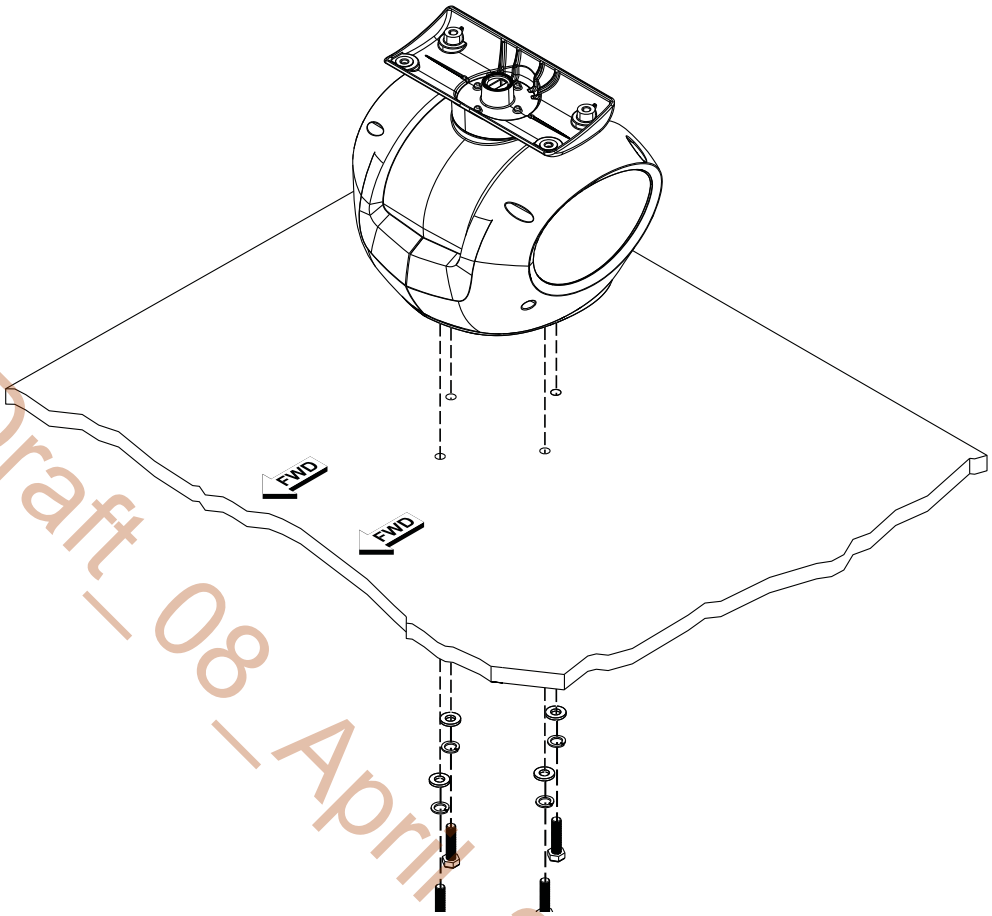

Draft_08_April_2015

9. Connect the 14 pin end of the interconnection cable. Take care to align the connector correctly to avoid bending the pins. Secure the locking collar by rotating clockwise until it clicks

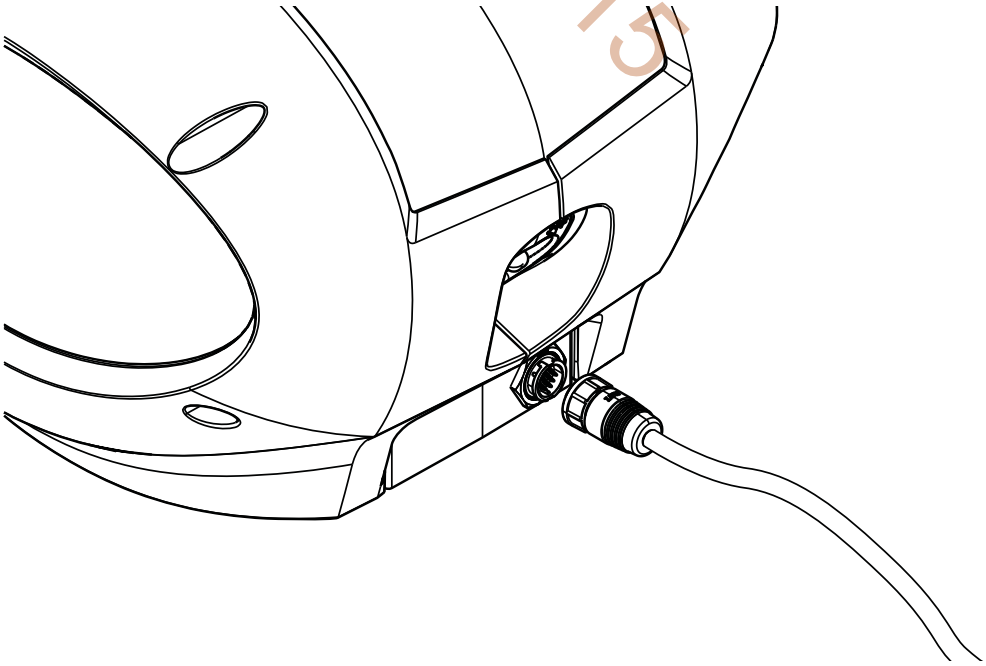

Pole or tower mount: Discreet cable connection

The interconnection cable can be optionally connected discreetly underneath the pedestal by moving the 14 pin connector at the rear of the pedestal to a bracket underneath the pedestal.

1. Remove the retaining nut and pull back the connector and fly lead.
2. Fit the supplied blanking plug where the connector used to be.

→ ***Note:*** The blanking plug is attached the bracket underneath the pedestal.

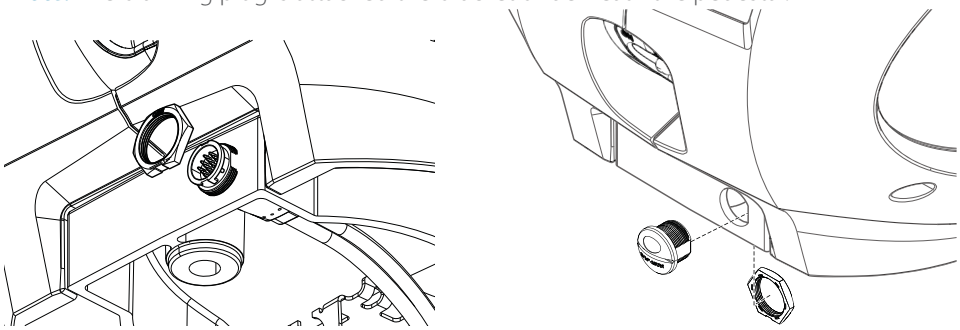

3. Re-route the internal fly lead to the bracket and secure with the nut.

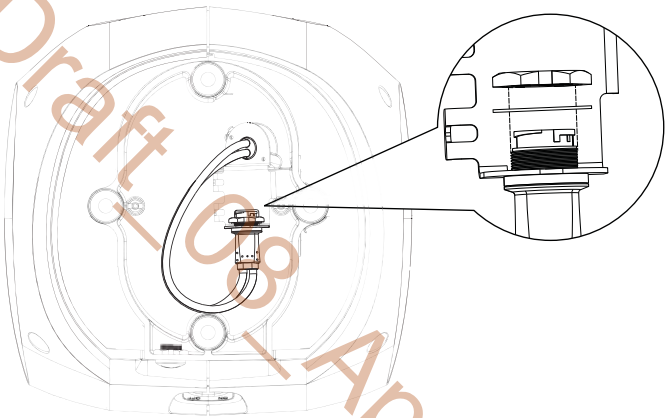

Draft_08_April_2015

4. Connect the interconnection cable. Take care to align the connector correctly to avoid bending the pins. Secure the locking collar by rotating clockwise until it clicks
5. Lower the pedestal carefully over the bolt holes so that they are aligned.
6. Place a flat washer and spring washer onto each bolt, as shown.
7. Insert bolts into the drilled holes and locate into the pedestals threaded mounting holes and tighten securely.

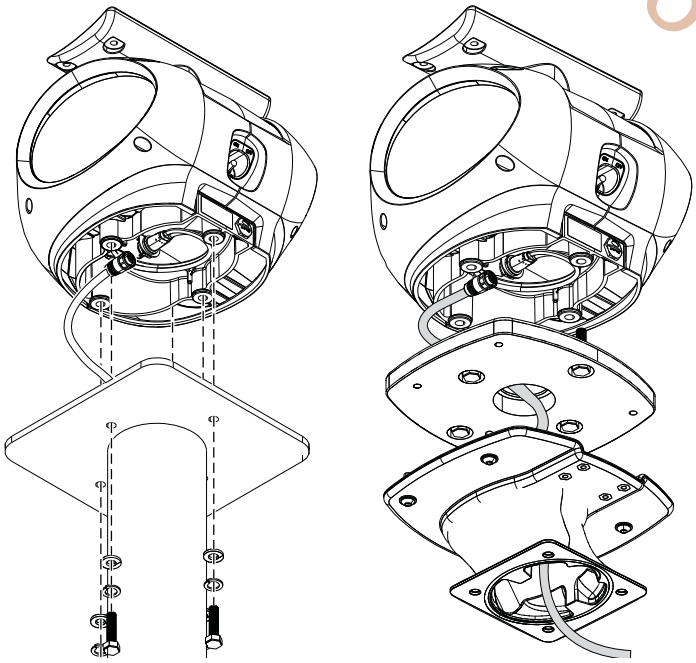

Fitting the antenna to the pedestal

1. Remove the protective cap from the pedestal and the protective label on the antenna that protects the wave guide.

→ ***Note:*** The protection label and waveguide cover is in place to prevent contaminants from entering the waveguide. These covers MUST BE REMOVED IMMEDIATELY PRIOR TO INSTALLING THE ANTENNA TO THE PEDESTAL.

→ ***Note:*** An antenna Sealing Ring is located under this label in the antenna waveguide chamber. Ensure the Sealing Ring remains in place prior to installing the antenna to the pedestal.

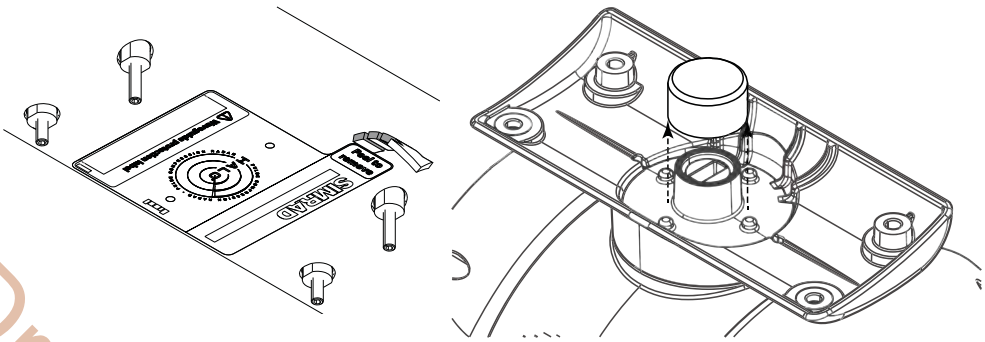

Draft – 08 – April – 2015

2. Carefully lower the antenna on to the pedestal. The antenna can only fit one way

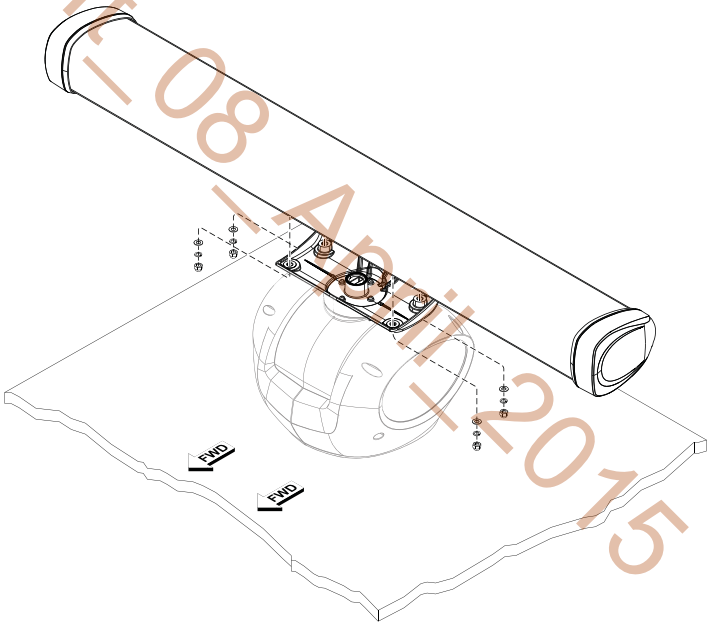

3. Place a flat washer then a spit washer followed by a dome nut on to each of the four antenna studs. Tighten the dome nuts to 15 N·m or (11 lb·ft)

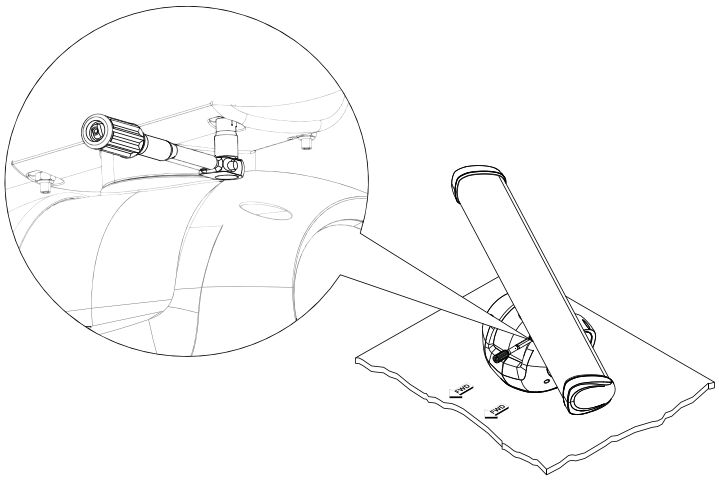

5 Wiring

Warning: SAFETY SWITCH. The pedestal unit has a safety switch, which removes power from the radar and disables the antenna rotating during maintenance and service. Make sure switch is set to off before commencing installation and back to ON after completion

All wiring connections are made inside the RI-12 interface box. It is necessary to remove the lid to gain access to the connections

1. Remove the lid by unscrewing the six retaining screws
2. Remove the grommet retaining clip
3. Remove the rubber grommets
4. Pass the cables through the rubber grommets and into the RI-12. Use a sharp knife to cut a slit the grommet.

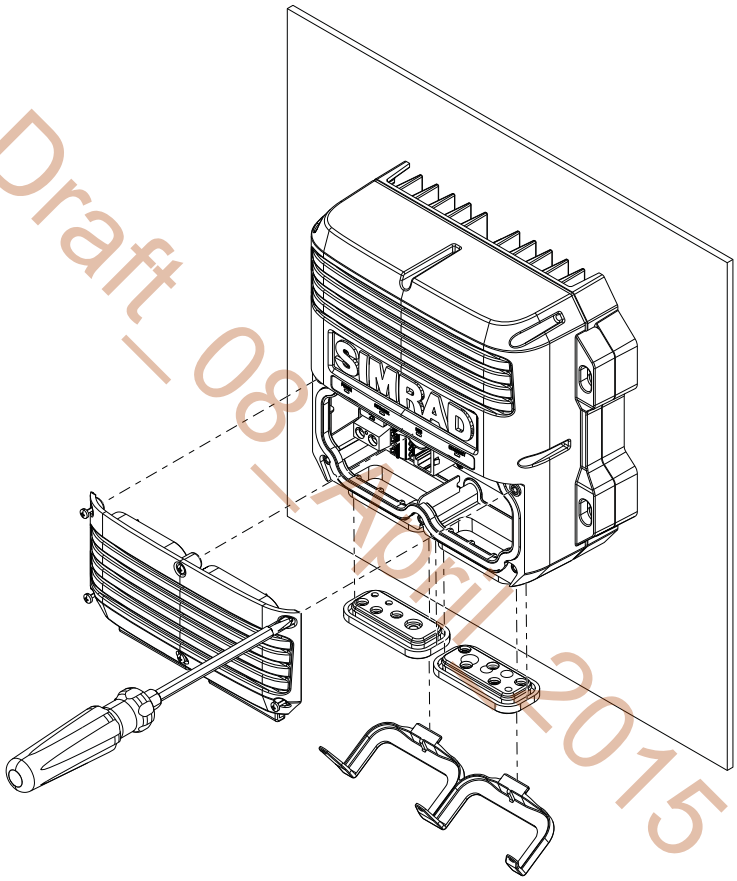

Draft_08_April_2015

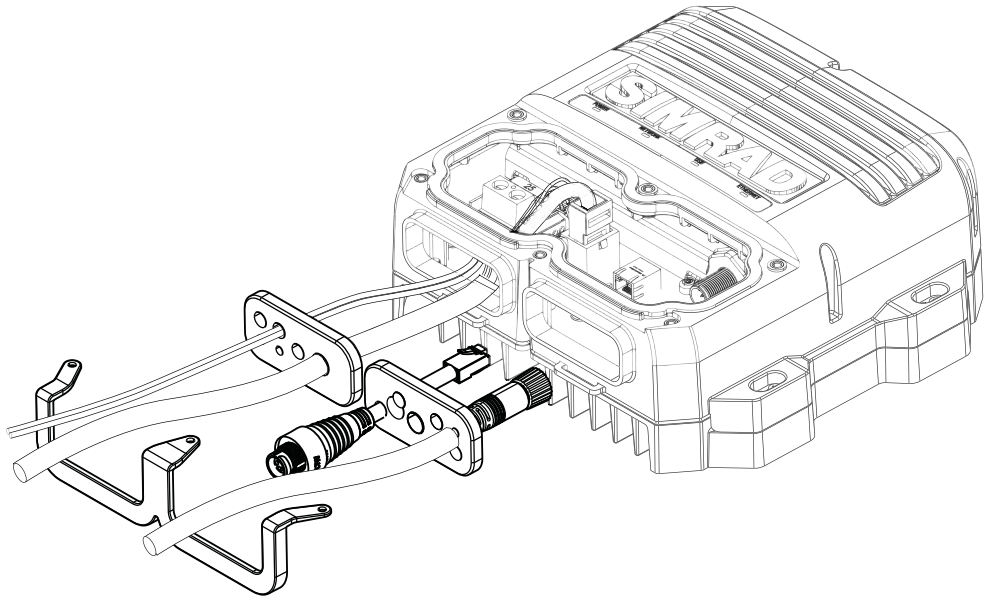

RI-12 connections

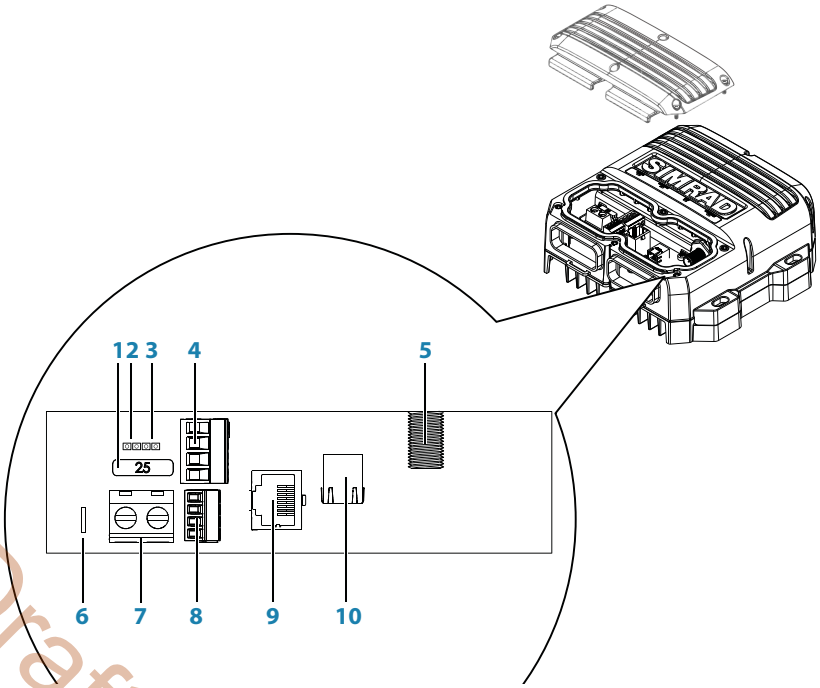

Key	Name	Description
1	FUSE	25 Amp blade fuse
2	Power control: REMOTE	Remote power control activation jumper. Move to REMOTE position so radar power state is controlled by a multifunction display or switch (see "Remote power control" on page 22)
3	Power control: AUTO	Radar will turn on when power is applied to the main power connector. Remote power wire on AUX IN port is ignored
4	SCANNER POWER	Phoenix connector: Provides 36 V DC up to the pedestal and power for the park brake. Connect the four wires of the interconnection cable matching the color coded sticker on the connector
5	NMEA 2000	Micro-C: NMEA 2000 network connection
6	SCREEN	No connect
7	- SUPPLY+	12 or 24 V DC input
8	AUX IN	Phoenix connector: NMEA 0183 data input, remote power on and DC input for the antenna park brake
9	SCANNER	RJ45: Ethernet data from the pedestal. Connect the RJ45 connector of the interconnection cable
10	NETWORK/MFD	RJ45: Connects the radar to the navigation Ethernet network

Draft_08_April_2015

LED Indicator lights

LED	Color	Indication
Power	Green steady	Power is applied and the radar is turned on (by either remote power on or power control jumper set to Auto).
Comms	Green flashing	NMEA 2000 traffic present
Status	Green steady	Radar is transmitting
	Orange	Radar is in standby
	Red	No power to the pedestal from the RI-12
	Red flashing	Power supply fault
Ethernet	Green fast flashing	Ethernet data present
	Off	No connection to any other active Ethernet device

Pedestal Interconnection cable

The interconnection cable connects the radar pedestal to the RI-12 Interface module. The cable connects to the pedestal using a 14 pin connector. The pedestal 14 pin connector can be set to either rear exit or discrete exit underneath the pedestal. (see "Pole or tower mount: Discreet cable connection" on page 14)

→ ***Note:*** Protect the connectors especially the RJ45 connector when pulling cable through the boat and avoid putting strain on to the connectors.

The interconnection cable is 9 mm in diameter. A 14 mm hole will be required in order for the RJ45 (Interface module end) to pass through bulkheads or 24 mm hole for the 14 pin connector (pedestal end) to pass though.

Run the interconnection cable between the pedestal and the location of the RI-12 Interface module.

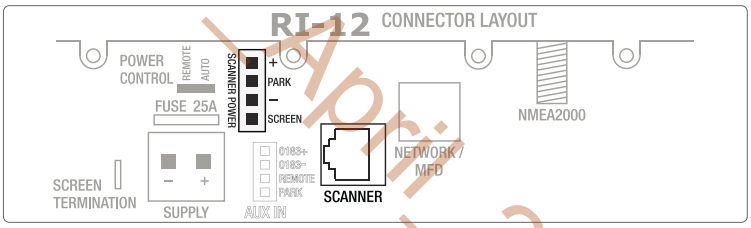

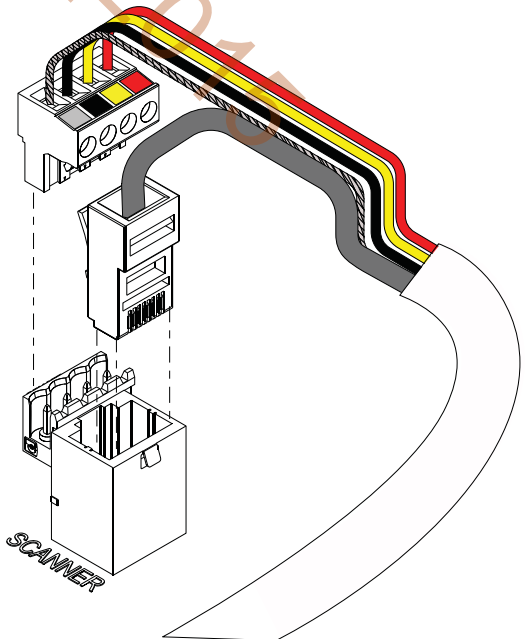

Draft 08 | April | 2017

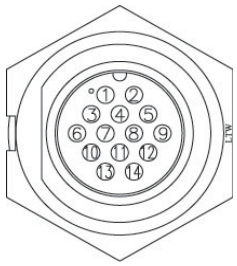

Scanner connector

Cable connector

Diameter = 23 mm

Pin-out	Wire color	
1	Black	Pedestal power DC (-)
2	Red	Pedestal power DC (+)
3	Yellow	
4	Drain	Tinned wire
5	N/A	N/A
6	Blue	RJ45 Pin 4
7	White / Blue	RJ45 Pin 5
8	White / Brown	RJ45 Pin 7
9	Brown	RJ45 Pin 8
10	White / Green	RJ45 Pin 3
11	N/A	N/A
12	White / Orange	RJ45 Pin 1
13	Green	RJ45 Pin 6
14	Orange	RJ45 Pin 2

RJ45 Connector pinout

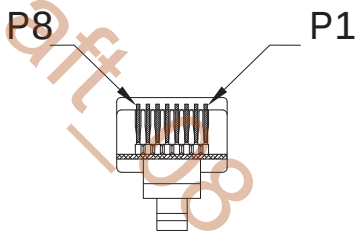

Pin	Color
1	White/Orange
2	Orange
3	White/Green
4	Blue
5	White/Blue
6	Green
7	White/Brown
8	Brown

Required to complete

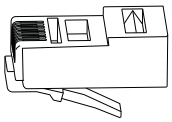

RJ45 Connector

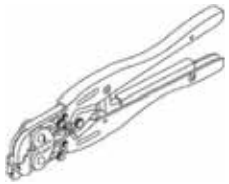

RJ45 Crimping tool

Draft_08_April_2015

Connect the power cable

Power for the radar is connected to the RI-12 Interface module. The radar requires either a **12 or 24 V DC** supply capable of delivering 20 Amps continuous.

The RI-12 is protected against reverse polarity, over voltage and under voltage. The RI-12 must be connected to a dedicated fuse/circuit breaker. The fuse/circuit breaker should be labeled accordingly.

Voltage	Cable length			
	2 m (6.6 ft)	5 m (16.4 ft)	10 m (32 ft)	20 m (66 ft)
12 V DC	2.1 mm (12-AWG)	3.3 mm (8-AWG)	4.1 mm (6-AWG)	N/A
24 V DC	1.3 mm (14-AWG)	2.1 mm (12-AWG)	3.3 mm (8-AWG)	4.1 mm (6-AWG)

→ ***Note:*** The RI-12 has an optional remote power control mode that can enable a compatible multifunction display or ignition switch to control the power state of the radar (see "Remote power control" on page 22)

Connecting power

1. Strip away approximately 10 mm (0.4") of the insulation at the end of each core of the power cable
2. Unscrew the retention screw from the positive input connector (identified by the + sign) on the radar processor
3. Insert the bare end of the positive wire into the positive power cable input connector to make a connection
4. Tighten the holding screw to hold the positive wire in place. Gently pull on the positive wire to ensure that it is secured
5. Repeat this process to connect the negative wire to the negative power cable input connector (identified by the – sign)

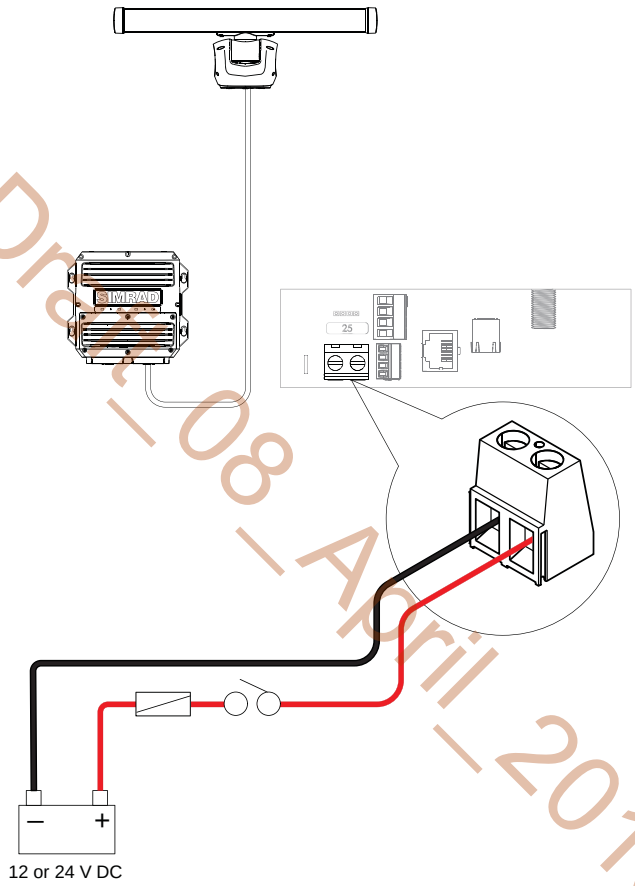

Draft_08_April_2015

Grounding requirements

The RI-12 has a chassis ground terminal on the underside of the case. The chassis ground is DC isolated from power (–ve) to eliminate the risk of galvanic corrosion.

It is recommended that the RI-12 ground is connected to the vessels bonded ground or a non bonded RF ground at the closest possible location, using 12 AWG wire (or thicker):

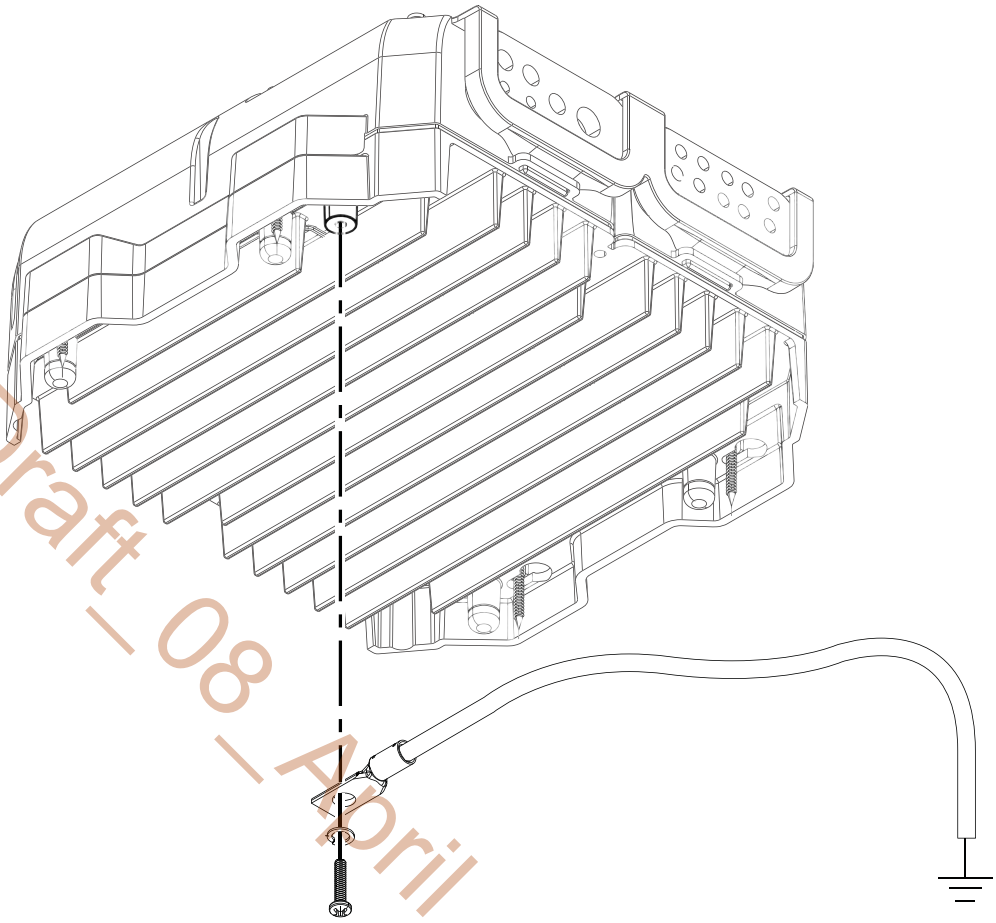

Draft_08_Abril_2015

Remote power control

Remote power control is a feature that allows the power state of the radar to be controlled either from a switch or when a compatible multifunction display is powered on or off.

→ ***Note:*** The power control jumper must be moved from AUTO to REMOTE for the radar to use the remote power on function.

→ ***Note:*** +V DC (5 V DC - 32 V DC) from either a multifunction display set as power control master or a switch can be applied to the REMOTE port of the AUX IN connector for the remote power on to function.

Connect the yellow wire to external wake up of a compatible multifunction display to the remote input. The radar will turn on when the display is turned on. The display must be set to 'Master' under Power Control. (Please refer to the displays user manual)

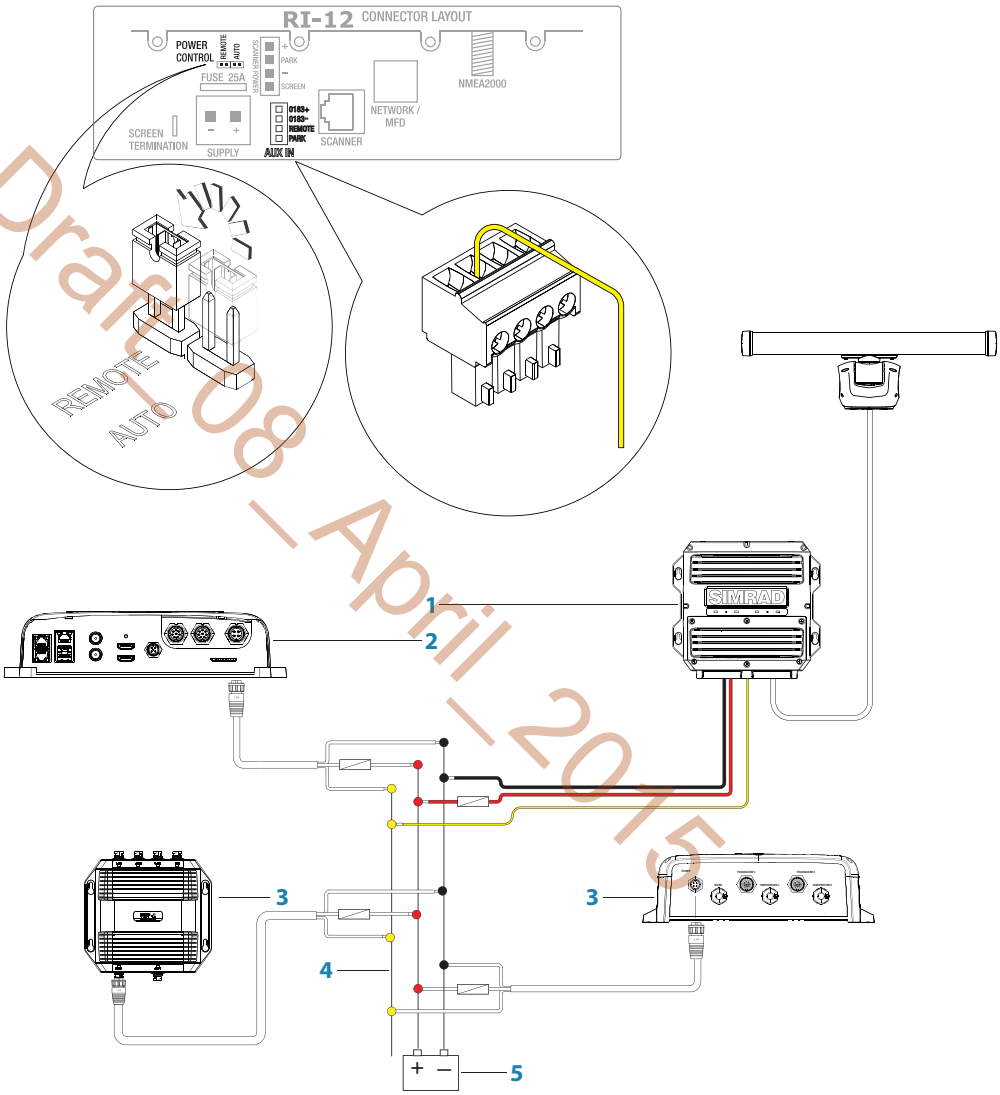

Key	Description
1	Halo® RI-12 Interface module
2	NSO evo2 or other multifunction display (one or more multifunction display needs to be set to power control master)
3	Other Simrad device with remote power control
4	Power control bus
5	DC Power

Draft 08 _ April _ 2015