Network

An Ethernet network is used to distribute the radar data to compatible multi-function displays.

The RI-12 is connected to the Ethernet network using a standard Simrad Ethernet cable and the supplied adapter cable. The RI-12 can be connected either directly to any Simrad compatible MFD or to a network switch such as an NEP-2 or SonarHub.

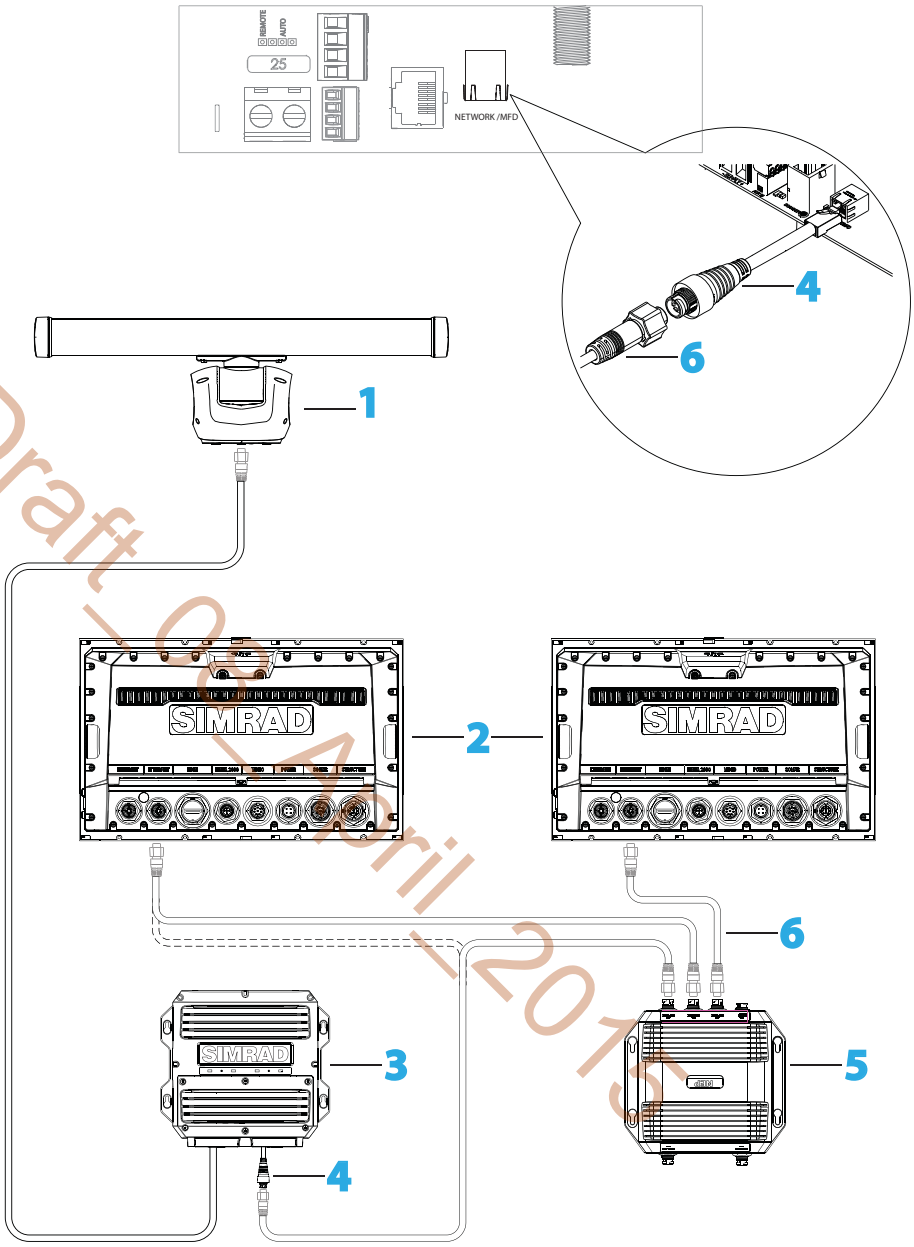

Draft_09_April_2015

Key	Description
1	Halo® pulse compression radar pedestal and antenna
2	Multi-function displays
3	RI-12 interface module
4	RJ45 to 5 pin yellow Ethernet adapter (p/n 000-11246-001)
5	NEP-2 or device with a built in Ethernet switch
6	Ethernet cables. Supplied with a 1.8 m (6 ft). The RI-12 can connect either directly to a multifunction display or to other an Ethernet switch such as NEP2 or SonarHub

NMEA2000

The RI-12 can be connected to a Micro-C NMEA 2000 network to receive heading and position information.

A heading sensor is required for the following functionality;

- MARPA : heading at 10 Hz or faster is required for the radar to calculate MARPA tracking. Heading must also be connected to the display.
- Radar Chart overlay: heading is required by the display to correctly overlay the radar over a chart.
- North Up: For the display to show the radar page with the top of the PPI as north.

For heading sensors that output NMEA 0183 (see "NMEA 0183" on page 25)

For magnetic heading sensors, heading calibration should be performed before using MARPA or Chart Overlay, and repeated annually, and after any major structural changes to the vessel.

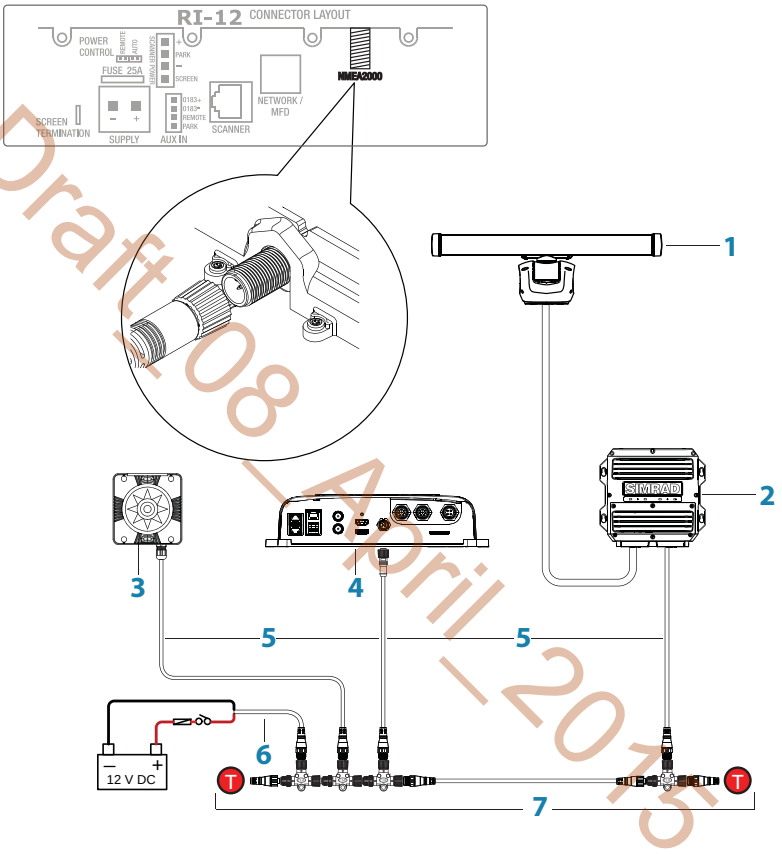

Draft 08_April_2015

Key	Description
1	Halo® radar pedestal and antenna
2	RI-12 interface modules
3	NMEA 2000 compliant heading sensor
4	Compatible multifunction display
5	Micro-C drop cables
6	Network power 12 V DC
7	Micro-C backbone (NMEA 2000) with terminators

NMEA 0183

The RI-12 has one NMEA 0183 (RS422) to accept heading and position information. The NMEA 0183 port accepts data at 4,800 baud.

Sentences used HDG, HDT, HDM, GGA, GLL, RMC, VTG. Heading should be at a minium of 10 Hz update rate.

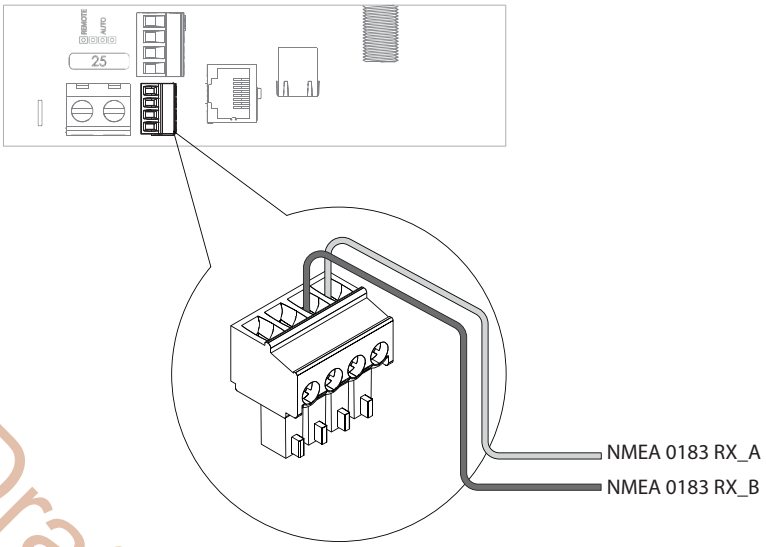

RI-12 heading source selection:

The RI-12 receives heading via the NMEA 2000 network and transmits this data to the radar, where MARPA processing is performed.

For Simrad installations with more than one heading source the RI-12 will use the Simrad group source. The source used by the Simrad group can be viewed or changed via the multifunction display in the Settings>Network>Sources… menu.

→ ***Note:*** If an NMEA 0183 heading source is connected the RI-12 will use this. It will ignore a NMEA 2000 heading source.

Antenna park

The Halo® Pulse Compression Radar has the ability to stop rotating the antenna and hold it at a predetermined angle in relation to the ships heading line. The park angle is set in the display (see "Adjust open array park angle" on page 28). In conjunction with this setting there is a park angle retention feature which is a very low current electromagnet that will provide resistance for the antenna to maintain a parked angle against wind and movement. The park brake requires a continuous low current DC supply (10-32 V DC). This draws less than 100uA.

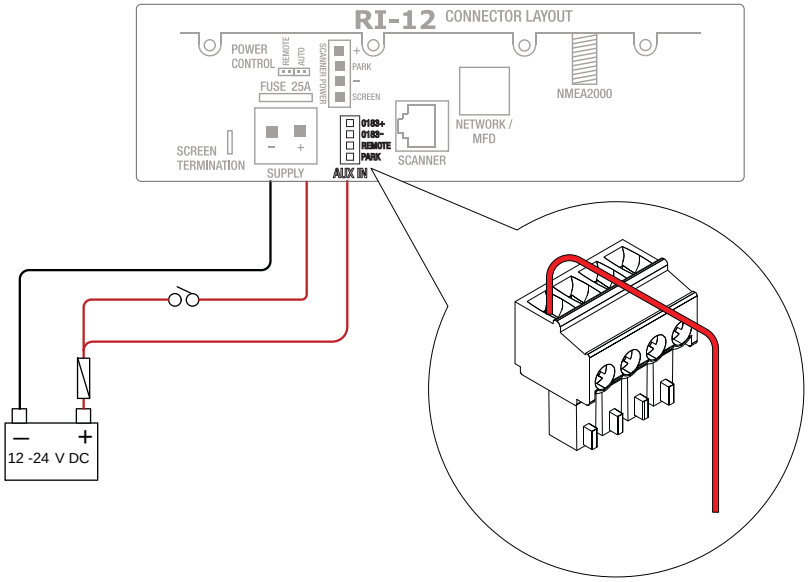

Draft_08_April_2015

When all connections have been made and checked the safety switch on the rear of the pedestal can be set to the ON position

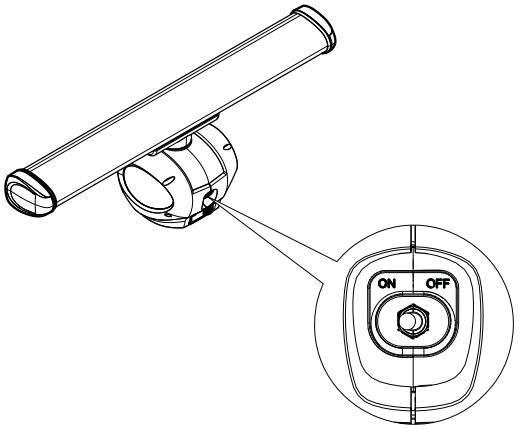

6 Setup and configuration

Setup and configuration of the Halo® radar has been simplified compared to traditional pulse radars. There is no zero range adjustment (time delay), no warm up time, and no burn in required.

Draft_08_April_2015

Source

On the radar page, choose the radar to be setup using the source drop down. MENU>SOURCE
When setting up the Halo Pulse Compression radar choose either Halo-A or Halo-B is selected

→ ***Note:*** following settings require the radar to be in Transmit mode. MENU>TRANSMIT

Entering radar setup on your display

Enter radar installation by pressing MENU > SETTINGS > RADAR > INSTALLATION.

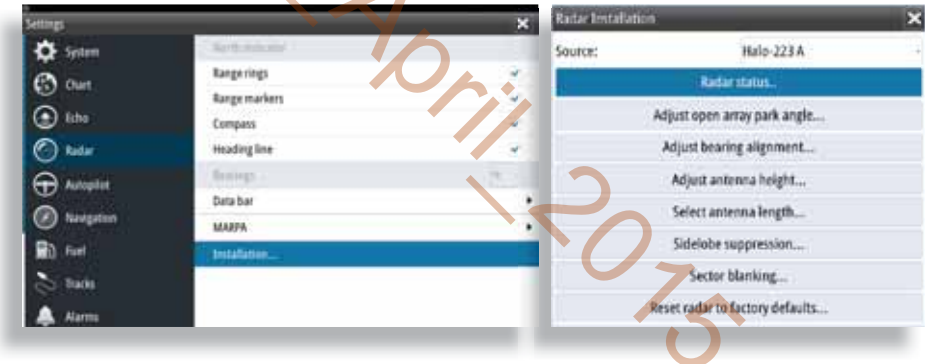

Select the antenna length

Select the correct length of antenna. Select Save to exit back to the radar installation page.

Adjust antenna height...

Set the radar scanner height. Use the slider control or the "+" or "-" buttons to set the value then SAVE.

→ ***Note:*** It is very important to set the antenna height configured correctly as this will affect the sea clutter function. Do not set the height to 0.

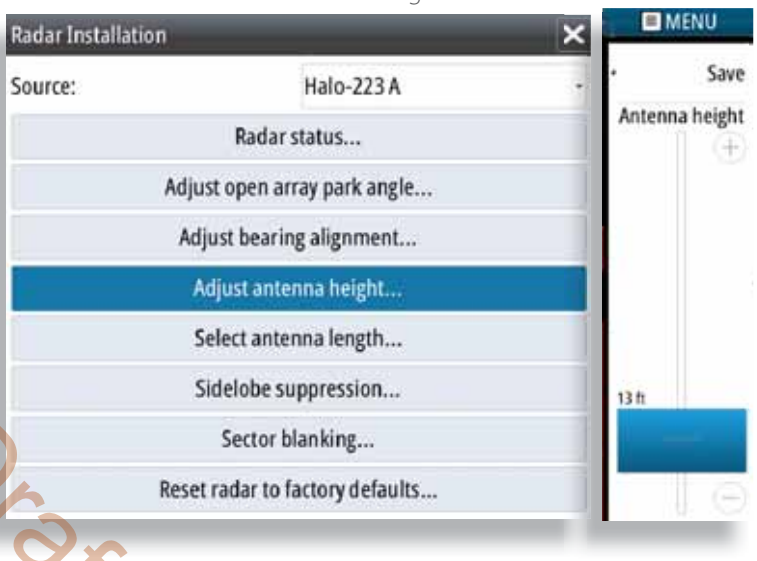

Adjust bearing alignment...

Adjust the heading marker. This is to align with the heading marker on the screen with the center line of the vessel, this will compensate for any slight misalignment of the pedestal during installation. Any inaccuracy will be evident when using MARPA or chart overlay.

Point the boat to the end of a head land or peninsula. Adjust the bearing alignment so the heading line touches the end of the same head land or peninsula.

Use the slider control or the "+" or "-" buttons to set the value then SAVE

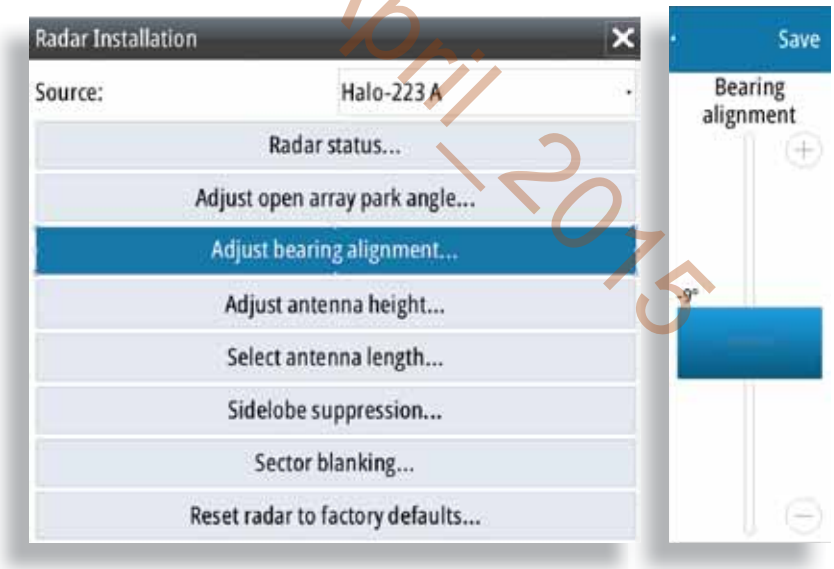

Draft 08 April 2015

Sector blanking

On vessels where the radar is installed in close proximity to a mast or structure that could cause unwanted reflections or interference to appear on the radar image. Use the sector blanking feature to stop the radar from transmitting in the direction up to four sectors.

→ ***Note:*** Sectors are setup relative to the heading line of the radar. The bearing of the sector is measured from the front of the vessel to the center line of the sector.

Adjust open array park angle

The park angle is the final resting position of the antenna relative to the heading line of the radar when the radar is set to standby. The antenna will stop rotating at the desired offset. Optionally the antenna can be held in place against wind by connecting the antenna park wire (see "Antenna park" on page 25).

→ ***Note:*** When entering standby the antenna may rotate multiple times before coming to rest

Sidelobe suppression...

→ ***Note:*** This control should only be adjusted by experienced radar users. Target loss in harbour environments may occur if this control is not adjusted correctly.

Occasionally false target returns can occur adjacent to strong target returns such as large ships or container ports.

This occurs because not all of the transmitted radar energy can be focused into a single beam by the radar antenna, a small amount energy is transmitted in other directions.

This energy is referred to as sidelobe energy and occurs in all radar systems.

The returns caused by sidelobes tend to appear as arcs:

When the radar is mounted where there are metallic objects near the radar, sidelobe energy increases because the beam focus is degraded. The increased sidelobe returns can be eliminated using the Sidelobe Suppression control in the Radar installation menu.

By default this control is set to Auto, and normally should not need to be adjusted. However if there is significant metallic clutter around the radar, sidelobe suppression may need to be increased. The control should be adjusted as follows:

Draft 08 April 2015

1. Set radar range to between 1/2 nm to 1 nm and Sidelobe Suppression to Auto
2. Take the vessel to a location where sidelobe returns are likely to be seen. Typically this would be near a large ship, container port, or metal bridge
3. Traverse the area until the strongest sidelobe returns are seen
4. Change Auto sidelobe suppression to OFF then select and adjust the sidelobe suppression control until the sidelobe returns are just eliminated. You may need to monitor 5-10 radar sweeps to be sure they have been eliminated
5. Traverse the area again and readjust if sidelobes returns still occur
6. Exit the installation menu

Radar Status

Provides the software version information

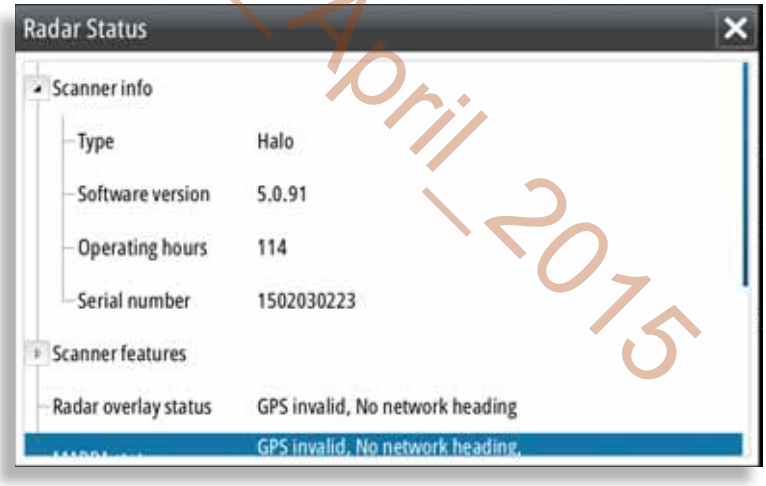

Reset Radar to factory defaults

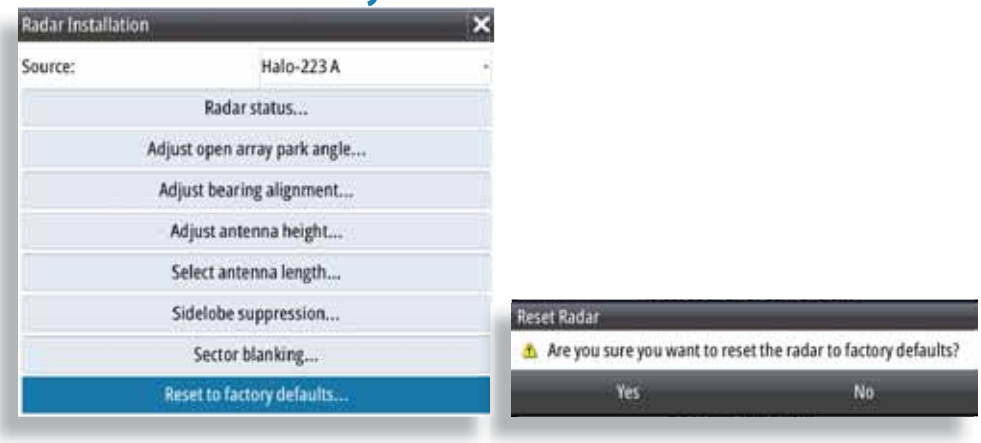

Draft_08_April_2015

Control pedestal accent lighting

The Halo™ Pulse Compression Radar pedestal has a blue accent light. The L.E.D. accent light has four light levels controlled from the radar menu.

→ ***Note:*** The accent light can only be adjusted when the radar is in standby

Halo™ Pulse Compression Radar's blue 4 level static accent pedestal lighting may not be approved for use in your boating location. Please check your local boating regulations before turning the blue accent lights ON.

Draft_08_April_2015

7 Specifications

Description	25 W Halo® Pulse Compression Radar System System consists of radar pedestal, antenna, 20 m (65 ft) Interconnection cable and RI-12 Interface Module.	
Type of emission	FCC/IC/R&TTE Type Certification FCC ID: RAYHALO IC ID: 4697A-HALO R&TTE: Emissions compliant to SM1541-4 (including -40 dB/dec future design objectives)	
Environmental		
Operating Temperature	-25°C to +55°C (-13°F - 131°F)	
Relative humidity	IEC60945 Exposed product	
Shock and Vibration	IEC60945 Exposed product and 20G, 100,000 cycle	
UV	IEC60945 Exposed product	
Waterproofing	IPX6	
Relative wind velocity	70 knots for 3', 4', and 6' antenna at 48 rpm with RI-12	
Power		
Power consumption	150 W (peak) at maximum wind velocity 40 W (average) at zero wind velocity 6.5 W (average) for Scanner + RI-12 in Standby mode	
DC input	R-12: 10.8 V DC to 31.2 V DC (12/24 volt systems) Pedestal voltage input is 36 V DC nominal generated by RI-12	
Power up time	16-25 seconds from POWER OFF to TRANSMIT	
Physical		
Height Antenna swing circle diameter	448 mm (17.64") 3 ft model: 1141 mm (3.5 ft) 4 ft model: 1431 mm (4.5 ft) 6 ft model: 2045 mm (6.5 ft)	
Component weights	Pedestal Antenna 3 ft Antenna 4 ft Antenna 6 ft RI-12 10 m (33 ft) Cable 20 m (66 ft) Cable 30 m (100 ft) Cable	18.75 Kg (41.3lb) 4.1 Kg (9.0 lb) 4.9 Kg (10.8 lb) 6.5 Kg (14.3 lb) 1.6 Kg (3.5 lb) 1.1 Kg (2.4 lb) 2.3 Kg (5.0 lb) 3.4 Kg (7.5 lb)
Antenna		
Instrumented range	3 ft model: 48 nm 4 ft model: 64 nm 6 ft model: 72 nm	
Transmitter	Solid State module – at least 10 years or 10,000 hrs lifetime	
Rotation	Approx. 24 to 48 rpm (Min 20 rpm at Max 70 kts). Software controlled in modes	
Beam width	3 ft: 2.4°+/-10% (-3 dB width) – 1.7 deg with Beam sharpening mode ON 4 ft: 1.8°+/-10% (-3 dB width) – 1.3 deg with Beam sharpening mode ON 6 ft 1.2°+/-10% (-3 dB width) - 0.8 deg with Beam sharpening mode ON	
Beam width Vertical	25° +/-20 % (-3 dB width)	
Plane of polarization	Horizontal Polarization	
Sidelobe level 3 ft	Below -23 dB max. (within ±10°) Below –30 dB max. (outside ±10°)	

Draft_08_April_2015

Side lobe level 4 ft	Below -23 dB max. (within ±10°) Below –30dB max. (outside ±10°)
Side lobe level 6 ft	Below -23 dB max. (within ±10°) Below –30 dB max. (outside ±10°)
Transmitter frequency	Synthesized - Upper half of X-Band 9.410 - 9.495 GHz
Peak power output	25 W ± 10% under any transmit condition – up to 10% duty cycle max
Pulse length/PRF and Compression ratio	300' to 1/8 nm: 0.04 µsec 1/4 to 1/2 nm : 2 µsec 3/4 to 1.0 nm : 8 µsec 1.5 to 2.0 nm : 16 µsec 3.0 to 4.0 nm : 32 µsec 6.0 to 24 nm : 64 µsec 36 to 72 nm : 96 µsec Effective Pulse Compression Ratio less than 150 in all modes Burst repetition rate is 500-2000 Hz and the number of pulses in a burst are variable
SART/RACON Triggering	Yes – trigger distance: about 1nm max – weather, sea state, and SART position dependent
Duplexer	Circulator and isolator
Mixer	MIC front-end
IF section	Center frequency: 28.625 MHz Bandwidth: 40 MHz max.* A/D; 16 bit 115 MSPS *Narrower bandwidths defined by signal processing
Noise figure	5 dB (Average) at front-end input.
Other	
Communications Ports	Ethernet -10/100 Base-T for radar data and control Micro-C male / NMEA2000 via RI-12 NMEA2000 PGNS USED 127250 - Vessel Heading 127251 - Rate of Turn 129025 - Position, Rapid Update 129026 - COG & SOG, Rapid Update 129029 - GNSS Position Data 130818 - Proprietary NMEA-0183 Input via RI-12 .. Sentenses used by the radar application. HDG, HDT, HDM, GGA, GLL, RMC, VTG. Baud rate 4800 Antenna park Remote power on
Motor	Brushless with solid state commutation with electromagnetic braking for parking.
Inter-connecting cable	Uses the same cable as the 3G/4G radars Available in: 10 m (33 ft), 20 m (66 ft), 30 m (100 ft) lengths Ships with (20 m (66 ft) Max length 30 m (100 ft) Options for cable to exit from rear of pedestal or pole mount

Draft_08_April_2016

8 Drawings

RI-12

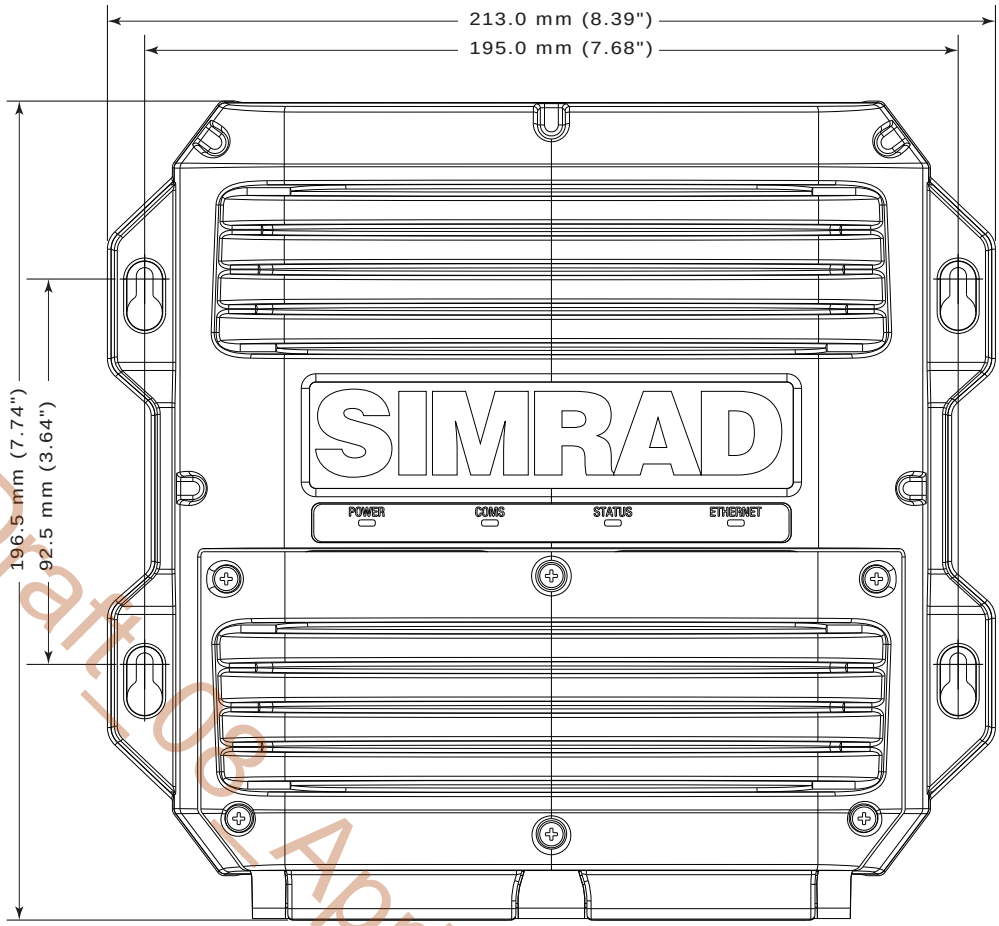

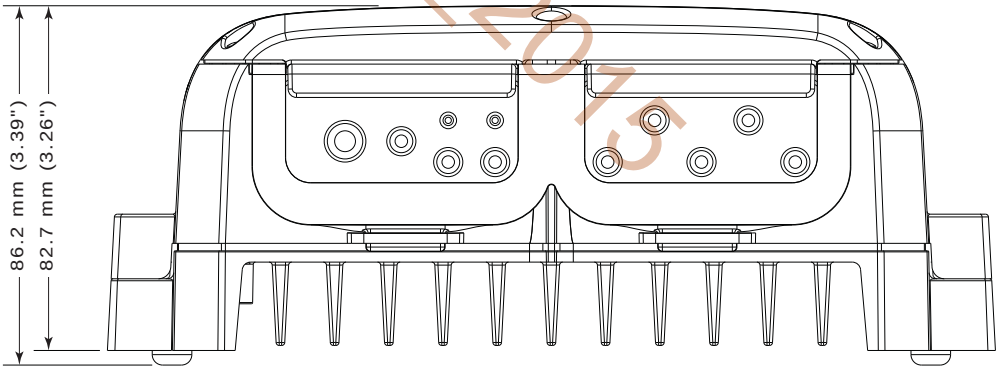

Draft 08 April 2015

Pedestal and antennas

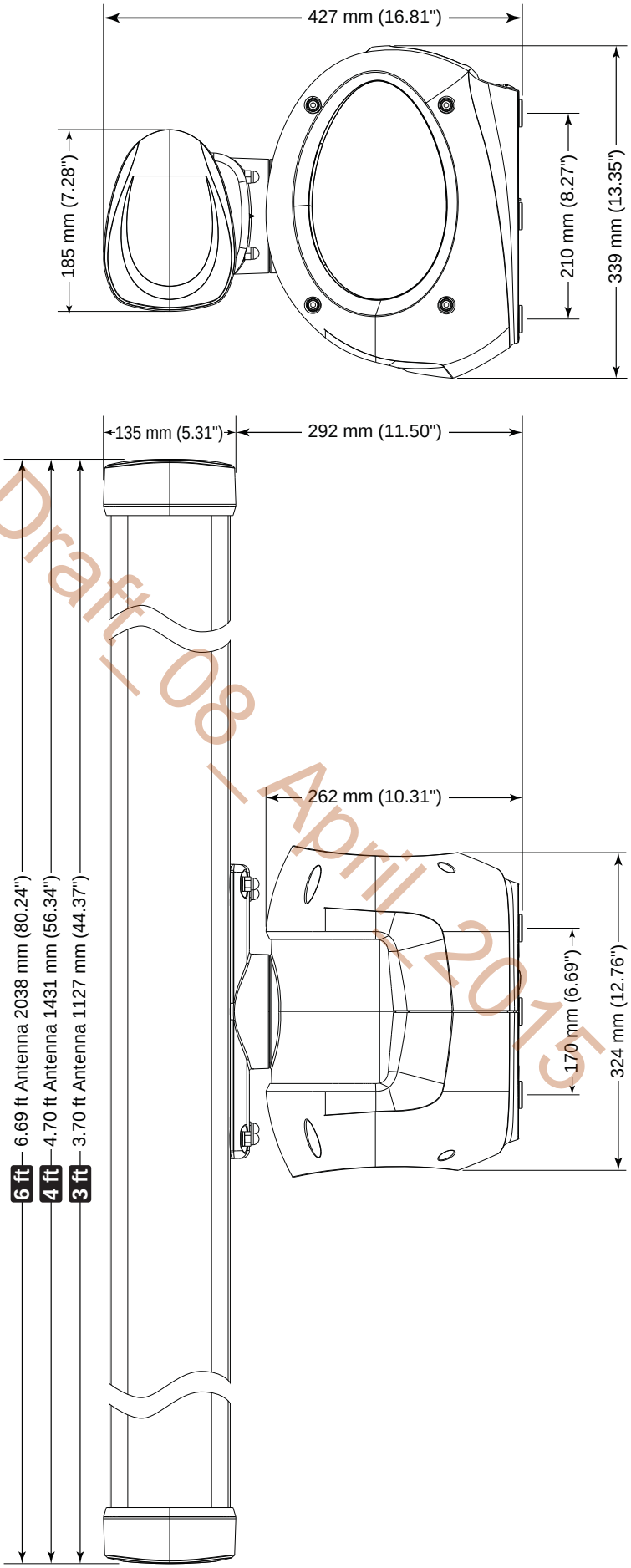

Draft_08_April 2015