SIMRAD®

HALO® 2000 Series and HALO® 3000 Series pulse compression radars

INSTALLATION MANUAL

ENGLISH

www.simrad-yachting.com

COMPRESSION RADAR • PULSE
ALO®

PREFACE

Disclaimer

This product is not a substitute for proper training and prudent seamanship. It is the owner's sole responsibility to install and use the equipment in a manner that will not cause accidents, personal injury or property damage. The user of this product is solely responsible for observing maritime safety practices.

Navigational features that appear in this guide are not a substitute for proper training and prudent seamanship. They do not replace a human navigator and SHOULD NOT be relied on as a sole or primary source of navigation. It is the operator's sole responsibility to use more than one navigational method to ensure the route suggested by the system is safe.

NAVICO HOLDING AS AND ITS SUBSIDIARIES, BRANCHES AND AFFILIATES DISCLAIM ALL LIABILITY FOR ANY USE OF THIS PRODUCT IN A WAY THAT MAY CAUSE ACCIDENTS, DAMAGE OR THAT MAY VIOLATE THE LAW.

This manual represents the product as at the time of printing. Navico Holding AS and its subsidiaries, branches and affiliates reserve the right to make changes to the product and/or specifications at any time without notice. Please contact your nearest distributor if you require any further assistance.

Governing language

This statement, any instruction manuals, user guides and other information relating to the product (Documentation) may be translated to, or has been translated from, another language (Translation). In the event of any conflict between any Translation of the Documentation, the English language version of the Documentation will be the official version of the Documentation.

Copyright

Copyright © 2022 Navico Holding AS.

Warranty

The warranty card is supplied as a separate document.

In case of any queries, refer to the brand website of your display or system: www.simrad-yachting.com.

Declarations and conformance

This equipment is intended for use in international waters as well as coastal sea areas administered by countries of the E.U. and E.E.A.

Compliance statements

Declarations

The relevant declarations of conformity are available on the following website within the radar's documentation section: www.simrad-yachting.com.

United Kingdom

Simrad HALO® 2000 Series and HALO® 3000 Series pulse compression radars comply with UKCA under The Radio Equipment Regulations 2017.

The Simrad HALO® RI-50 interface module complies with UKCA under The Electromagnetic Compatibility Regulations 2016.

Europe

Simrad HALO® 2000 Series and HALO® 3000 Series pulse compression radars comply with CE under RED Directive 2014/53/EU.

The Simrad HALO® RI-50 interface module complies with CE under EMC Directive 2014/30/EU.

United States of America

THIS DEVICE COMPLIES WITH PART 15 OF THE FCC RULES. OPERATION IS SUBJECT TO THE FOLLOWING TWO CONDITIONS: (1) THIS DEVICE MAY NOT CAUSE HARMFUL INTERFERENCE, AND (2) THIS DEVICE MUST ACCEPT ANY INTERFERENCE RECEIVED, INCLUDING INTERFERENCE THAT MAY CAUSE UNDESIRED OPERATION.

⚠ **Warning: Navico is not responsible for any changes or modifications not expressly approved by the party responsible for compliance. Such modifications could void the user's authority to operate the equipment.**

RF emissions notice

This equipment complies with FCC radiation exposure limits set forth for an uncontrolled environment. This device's antenna must be installed in accordance with provided instructions, and it must be operated with a minimum spacing of 849.06 cm (27.856 ft) for the HALO® 3000 Series and 564.96 cm (18.5354 ft) for the HALO® 2000 Series between the antenna and a person's body (excluding extremities of hands, wrist and feet).

➔ *Note: This equipment has been tested and found to comply with the limits for a Class B digital device, pursuant to part 15 of the FCC Rules. These limits are designed to provide reasonable protection against harmful interference in a residential installation. This equipment generates, uses and can radiate radio frequency energy and, if not installed and used in accordance with the instructions, may cause harmful interference to radio communications. However, there is no guarantee that interference will not occur in a particular installation. If this equipment does cause harmful interference to radio or television reception, which can be determined by turning the equipment off and on, the user is encouraged to try to correct the interference by one or more of the following measures:*

- *Reorient or relocate the receiving antenna.*
- *Increase the separation between the equipment and receiver.*
- *Connect the equipment into an outlet on a circuit different from that to which the receiver is connected.*
- *Consult the dealer or an experienced radio/TV technician for help.*

Canada

English

This device complies with Innovation, Science and Economic Development Canada license-exempt RSS standard(s). Operation is subject to the following two conditions: (1) this device may not cause interference, and (2) this device must accept any interference, including interference that may cause undesired operation of the device.

Français

Le présent appareil est conforme aux Innovation, Sciences et Développement économique Canada (ISDE) applicables aux appareils radio exempts de licence. L'exploitation est autorisée aux deux conditions suivantes : (1) l'appareil ne doit pas produire de brouillage, et (2) l'utilisateur de l'appareil doit accepter tout brouillage radioélectrique subi, même si le brouillage est susceptible d'en compromettre le fonctionnement.

Innovation, Science and Economic Development Canada (ISED) statement

English

Under ISED regulations, this radio transmitter may only operate using an antenna of a type and maximum (or lesser) gain approved for the transmitter by ISED. To reduce potential radio interference to other users, the antenna type and its gain should be so chosen that the equivalent isotropically radiated power (e.i.r.p.) is not more than that necessary for successful communication.

The radio transmitters, 978B-HALO2000 and 978B-HALO3000, have been approved by Innovation, Science and Economic Development Canada to operate with the antenna types listed below with the maximum permissible gain and required antenna impedance for each antenna type indicated. Antenna types not included in this list, having a gain greater than the maximum gain indicated for that type, are strictly prohibited for use with this device.

Français

Conformément à la réglementation d'Innovation, Sciences et Développement économique Canada (ISDE), le présent émetteur radio peut fonctionner avec une antenne d'un type et d'un gain maximal (ou inférieur) approuvé pour l'émetteur par Industrie Canada. Dans le but de réduire les risques de brouillage radioélectrique à l'intention des autres utilisateurs, il faut choisir le type d'antenne et son gain de sorte que la puissance isotrope rayonnée quivalente (p.i.r.e.) ne dépassepas l'intensité nécessaire à l'établissement d'une communication satisfaisante.

Les présents émetteurs radio, 978B-HALO2000 et 978B-HALO3000, ont été approuvés par Innovation, Sciences et Développement économique Canada (ISDE) pour fonctionner avec les types d'antenne énumérés ci-dessous et ayant un gain admissible maximal et l'impédance requise pour chaque type d'antenne. Les types d'antenne non inclus dans cette liste, ou dont le gain est supérieur au gain maximal indiqué, sont strictement interdits pour l'exploitation de l'émetteur.

HALO® antennas	Description	Max. permissible antenna gain (dBi)	Impedance
000-11464-001	Antenna, 3ft, HALO®	26	50 Ohm (WR-90 waveguide)
000-11465-001	Antenna, 4ft, HALO®	27.2	50 Ohm (WR-90 waveguide)
000-11466-001	Antenna, 6ft, HALO®	29	50 Ohm (WR-90 waveguide)

Radio frequency (RF) safe distances

Figures in the table below show the radio frequency radiation safe distance for an operating antenna is within the antenna's turning circle. Irrespective, users should stay well outside the turning circle of the antenna to avoid injury through physical impact as it spins.

➔ *Note: These safe distances are based on conservative, near field, average power calculations. They are being tested by an independent laboratory and will be updated once test results are available.*

System	100 W / m² occupational safe distance	10 W / m² public safe distance
HALO® 2000 Series radars	0.4 m (1.2 ft)	1.5 m (4.9 ft)
HALO® 3000 Series radars	0.5 m (1.6 ft)	2.0 m (6.6 ft)

Trademarks

®Reg. U.S. Pat. & Tm. Off, and ™ common law marks.

Visit www.navico.com/intellectual-property to review the global trademark rights and accreditations for Navico Holding AS and other entities.

- Navico® is a registered trademark of Navico Holding AS.
- Simrad® is a registered trademark of Kongsberg Maritime AS, licensed to Navico Holding AS.
- HALO® is a registered trademark of Navico Holding AS.
- VelocityTrack™ is a trademark of Navico Holding AS.
- ZoneTrack™ is a trademark of Navico Holding AS.
- Precision™ is a trademark of Navico Holding AS.
- GO™ is a trademark of Navico Holding AS.
- NSS evo3™ is a trademark of Navico Holding AS.
- NSS evo3S™ is a trademark of Navico Holding AS.
- NSO evo3™ is a trademark of Navico Holding AS.
- NSO evo3S™ is a trademark of Navico Holding AS.
- NSO evo3S™ is a trademark of Navico Holding AS.
- XSE™ is a trademark of Navico Holding AS.
- XSR™ is a trademark of Navico Holding AS.
- R2009™ is a trademark of Navico Holding AS.

- R3016™ is a trademark of Navico Holding AS.
- NMEA 2000® is a trademark of the National Marine Electronics Association.

About this manual

This manual is a reference guide for installing the Simrad® HALO 2000 Series and HALO 3000 Series pulse compression radars. It does not cover basic background information about how equipment such as radars, echosounders and AIS work. Such information is available from our website: www.support.simrad-yachting.com.

Intended audience

This manual assumes the reader has basic knowledge about this type of equipment with regards to:

- installation work to be carried out
- nautical terminology and practices.

Translated manuals

Translated versions of this manual can be found on the website: www.simrad-yachting.com.

CONTENTS

8 Introduction
8 Warnings

9 Check the parts
9 Pedestal
10 Antenna
10 RI-50 radar interface module

11 Tools required

12 Installation guidelines
12 What not to do
13 Compass safe distance
13 Multi-radar installations
13 Power boat installations
14 Considerations for roof mounting

17 Hardware mounting
17 Install the RI-50 radar interface module
18 Run the interconnection cable
18 Install the pedestal
19 Surface mount: rear cable connection
22 Pole or tower mount: discreet cable connection
23 Fit the antenna to the pedestal

26 Wiring
26 RI-50 circuit board
27 Run the cables
28 Connect the interconnection cable
29 Connect the power cable
30 Ground the RI-50
31 Activate remote power control
32 Activate antenna park
33 Connect the network cables
34 Additional radar functions
35 Start the radar
36 RI-50 LED indicator lights
38 Fuse

39 Setup and configuration
39 Radar source
39 Radar status
39 Antenna setup
39 Adjust bearing alignment
39 Sidelobe suppression
39 Sector blanking
39 Adjust open array park angle
39 HALO light
39 Reset radar to factory defaults
40 Error codes

41 Upgrading
41 Record the old settings
41 Isolate power to the radar
41 Remove the old pedestal
42 Remove the RI-12
43 Install the RI-50 and new pedestal

44 Specifications

47 Drawings
47 RI-50
48 Pedestal and antennas
49 Antenna swing circle diameters

50 Parts list

INTRODUCTION

This manual explains how to install the latest generation of HALO open array, pulse compression radars – the HALO 2000 Series and HALO 3000 Series.

This manual should be used in conjunction with the installation manual provided with your multi-function display. It is written for professional marine technicians, installation technicians and service technicians. Dealers may use information contained in this document.

HALO 2000 Series and HALO 3000 Series radars combine the best characteristics of traditional pulse and FMCW broadband radar systems. Pulse compression technology provides an unprecedented mix of long and short detection range, high target definition, and minimal clutter. Solid state technology means minimal warm-up time and maximum ocean-going reliability.

This latest generation of HALO open array radars incorporate updated hardware and mechanical design improvements that deliver increased power, improved long-range target detection performance and more system reliability.

HALO 2000 Series and HALO 3000 Series radar systems consist of a pedestal, antenna, RI-50 radar interface module and connection cables. A supplied Ethernet network cable connects the RI-50 radar interface module to the navigation Ethernet network.

➔ *Notes:*

- HALO 2000 Series and HALO 3000 Series radar systems are available with antennas in three sizes: 3 ft, 4 ft and 6 ft.
- At the time of release, HALO 2000 Series and HALO 3000 Series radars work with Simrad® GO XSR, GO XSE (9/12), NSS evo3, NSS evo3S, NSO evo3, NSO evo3S and NSO evo3S MPU systems. They also work with Simrad® R2009 and R3016 radar control units.

Warnings

⚠ Use the radar at your own risk. Your radar is designed as a navigation aid. Always compare the navigation information received from your radar with data from other navigation aids and sources. When a conflict arises between the navigation data from your radar and data from other navigation aids, make sure you resolve the conflict before proceeding with navigation.

A CAREFUL NAVIGATOR NEVER RELIES ON ONLY ONE METHOD TO OBTAIN NAVIGATION INFORMATION.

International Regulations for Preventing Collisions at Sea mandate that when radar is on a vessel, the radar must be used at all times, regardless of weather conditions or visibility. Numerous court decisions have ruled that the radar must be used, and the radar operator must know all operational aspects of radar performance. Otherwise they will face a greater risk of liability if an accident occurs.

⚠ High current, stored and microwave energy hazard. Technicians must exercise extreme care when working with the unit. ALWAYS disconnect from the power source before removing the cover. Some capacitors may take several minutes to discharge, even after switching off the radar. Before touching any high voltage components, ground them with a clip lead.

⚠ The radar's blue 4-level static accent pedestal lighting may not be approved for use in your boating location. Please check your local boating regulations before turning the blue accent lights ON.

⚠ The microwave energy radiated by a radar antenna is harmful to humans, especially the eyes. NEVER look directly into an open waveguide or into the path of radiation from an enclosed antenna. Disconnect from the power source or use the service mode switch on the back of the pedestal whenever you need to work on the antenna or other equipment in the beam of the radar.

CHECK THE PARTS

Pedestal

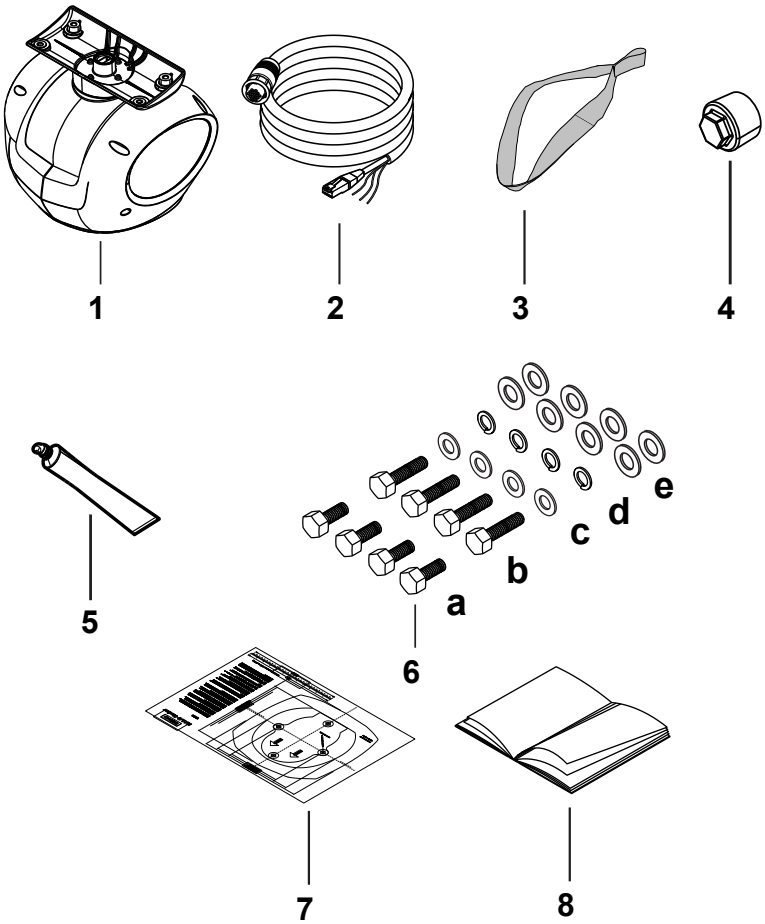

1	Radar pedestal	
2	Interconnection cable 20 m (65 ft). Other lengths are available from your nearest Simrad® dealer.	
3	Lifting strap	
4	Blanking plug (used when the interconnection cable is connected underneath the pedestal. Blanking plug is fitted underneath the pedestal when manufactured.)	
5	Tef-Gel anti-seize, anti-corrosion gel	
6	Mounting bolts and washers	
	a) Bolts, hex head, M12 x 35 mm, 316 s/s	x 4
	b) Bolts, hex head, M12 x 50 mm, 316 s/s	x 4
	c) Flat washer, M12 x 36 x 3, 316 s/s	x 4
	d) Spring washer, M12, 316 s/s	x 4
	e) Plastic isolating washer, M12 x 38	x 8
7	Mounting template	
8	This manual	

Antenna

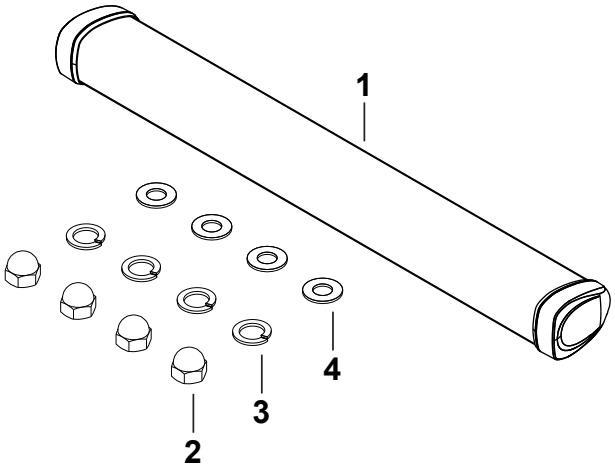

1	Radar antenna	3 ft model: 3.70 ft / 1128 mm / 44.41” 4 ft model: 4.70 ft / 1432 mm / 56.38” 6 ft model: 6.69 ft / 2039 mm / 80.28”	
2	Dome nuts, M8, 316 s/s		x 4
3	Spring washers, M8, 316 s/s		x 4
4	Flat washers, M8 x 16 x 1.2, 316 s/s		x 4

RI-50 radar interface module

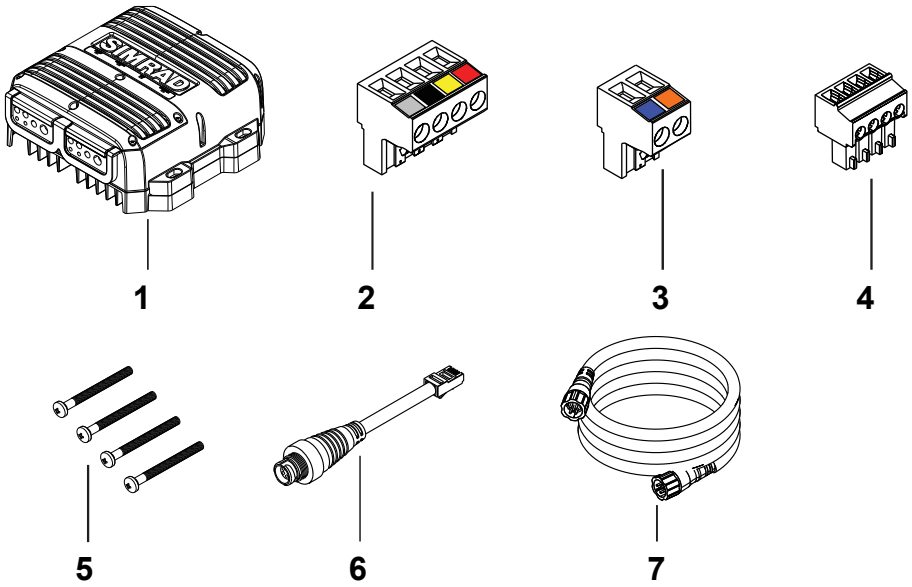

1	RI-50 radar interface module	
2	4-way connector for the pedestal interconnection cable	
3	2-way connector for the pedestal interconnection cable	
4	Connector for Aux in (remote power and antenna park brake)	
5	Mounting screws, Phillips pan head, No. 6 x 45 mm, s/tap, 304 s/s	x 4
6	Ethernet adapter RJ45 male to 5-pin female 150 mm (5.9”)	
7	Ethernet cable 1.8 m (6.0”)	

TOOLS REQUIRED

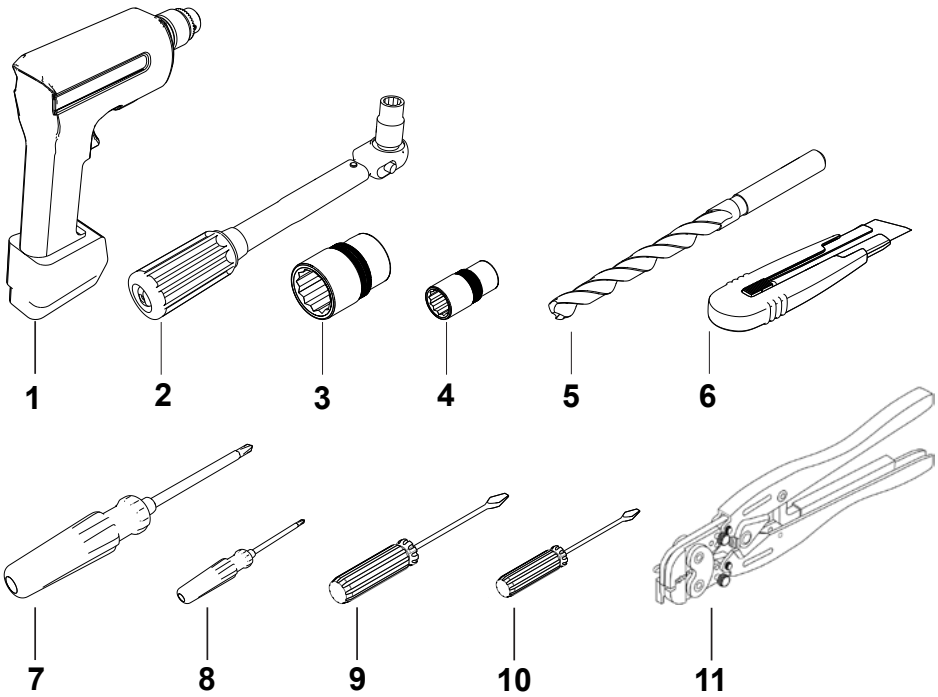

1	Drill
2	Torque wrench
3	19 mm socket
4	13 mm socket
5	Drill bit 13 mm (0.5”)
6	Sharp knife
7	Screwdriver (Pozidriv, PZ2) for RI-50 mounting screws
8	Screwdriver (Phillips, #1) for RI-50 circuit board cover screws
9	Screwdriver (flat head, 4 mm) for SUPPLY and SCANNER POWER connectors
10	Screwdriver (flat head, 3 mm) for AUX connectors
11	RJ45 crimping tool (if refitting/replacing the RJ45 connector)

INSTALLATION GUIDELINES

⚠ **Warning: A radar should only be installed by a qualified marine technician, as improper installation poses risks to the installer, the public, and to the safety of the vessel.**

⚠ **Warning: Before starting the installation or any maintenance on a HALO 2000 Series or HALO 3000 Series radar, make sure the service mode switch at the back of the pedestal is set to 0 (power supply disabled).**

There is a transmit interlock that prevents radar transmissions if the antenna is not rotating. However, a high voltage remains for a period of time after the system is turned off. If you are not familiar with this type of electronics, consult a trained service or installation technician before trying to service any part of the equipment.

Installation includes:

- hardware mounting
- electrical wiring
- configuring the display or network system to work with the radar
- adjusting the radar for proper performance.

The radar's ability to detect targets depends greatly on its location. The ideal location is high above the vessel's keel line where there are no obstacles.

A higher installation location improves the radar's ranging distance, but it also increases the range around the vessel where targets cannot be detected and increases sea clutter pick up.

When you are deciding on the location, consider the following:

- The length of the 20 m (66 ft) interconnection cable supplied with the radar is usually sufficient. A longer 30 m (98 ft) cable is available. 30 m (98 ft) is the longest the cable that can be used.
- If the roof of the wheelhouse is the highest existing location, consider installing a radar mast or tower on which you can mount the radar.
- If you install the radar on the mast, position it on the forward side so there is a clear view to the front of the vessel.
- It is preferable to install the antenna parallel to the line of the keel.

What not to do

- Do not install the radar too high, where its weight may compromise the stability of the vessel and degrade the radar picture over short ranges.
- Do not install the radar close to lamps or exhaust outlets. Heat, soot, and smoke emissions may degrade radar performance or cause a breakdown.
- Do not install the radar where a large obstruction (such as an exhaust stack) is at the same level as the beam. The obstruction is likely to generate false echoes and/or shadow zones. If there is no alternative location, use the radar's sector blanking setting on your multi-function display.
- Do not install the radar close to the antennas of other equipment, such as direction finders, VHF antennas and GPS equipment, as it may cause interference.
- Do not install the radar where may be subjected to strong vibrations that could degrade its performance.
- Do not install the radar close to halyards or flags because the wind could wrap these around the antenna and jam it.

Compass safe distance

Do not install your HALO radar inside of the recommended safe distances of any navigation instruments such as the magnetic compass and chronometer. The minimum distance to install the pedestal near the vessel's compass is STD 1.0 m (3.3 ft), Steer 0.5 m (1.6 ft).

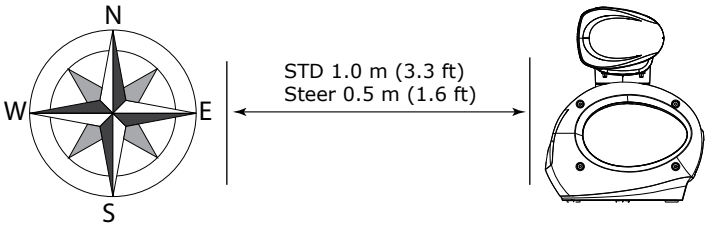

The minimum distance to install the RI-50 near the vessel's compass is STD 1.0 m (3.3 ft).

Multi-radar installations

Do not install your HALO 2000 Series or HALO 3000 Series radar on the same horizontal beam plane as any other radar. Separate them vertically by at least 2 m (6.6 ft).

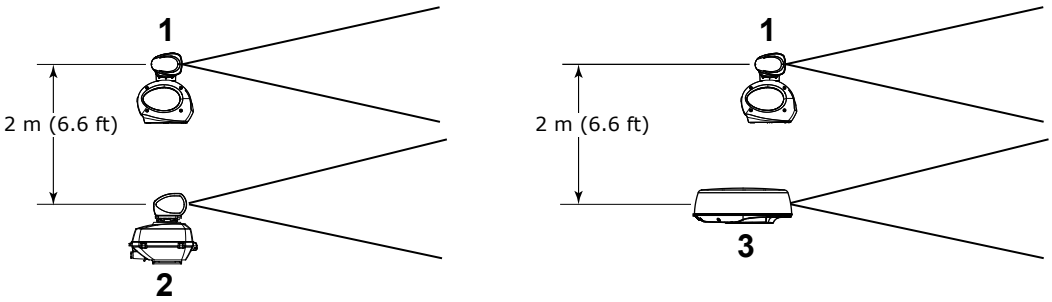

1	HALO 2000 Series or HALO 3000 Series radar
2	Conventional pulse radar or another HALO 2000 Series or HALO 3000 Series radar
3	HALO 20, 20+ or 24 dome radar

→ *Note: Possible interference can be reduced using the radar's sector blanking setting on your multi-function display.*

Power boat installations

If possible, make sure the mounting location gives your radar a clear view all around the vessel.

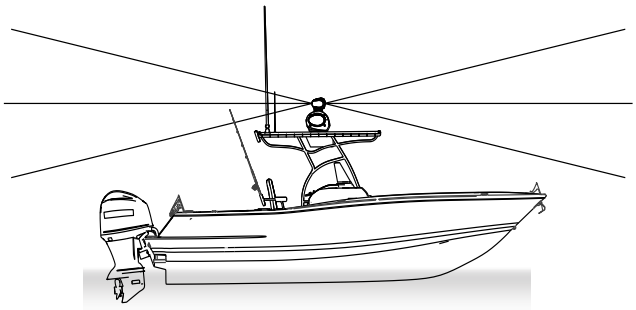

If you install your HALO radar on a power boat with a steep planing angle, it is recommended you tilt the radar angle down at the front.

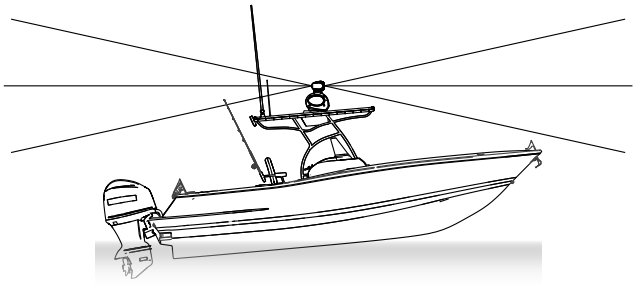

➔ *Note: Optional 4° base wedges are available from third-party suppliers.*

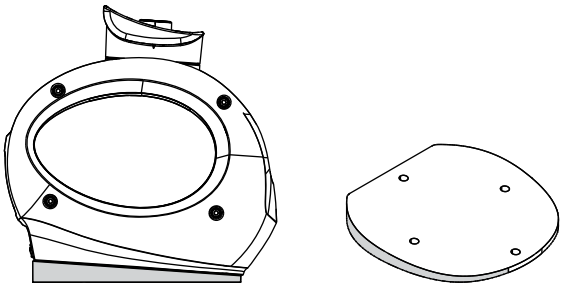

Considerations for roof mounting

When deciding a suitable mounting location for your HALO radar, be aware that the vertical radar beam extends to 25° either side of horizontal, with 50% of the emitted energy projecting in a beam 12.5° either side of horizontal.

If the radar beam cannot clear the roof line, this decreases the performance of the radar. Depending on the size of the hard top of the vessel, we recommend you elevate the antenna to ensure the radar beams clear the roof line.

Possible performance loss

If you mount your HALO radar directly on to a large hard top, the radar's performance could suffer as the emitted energy is either reflected or absorbed by the hard top.

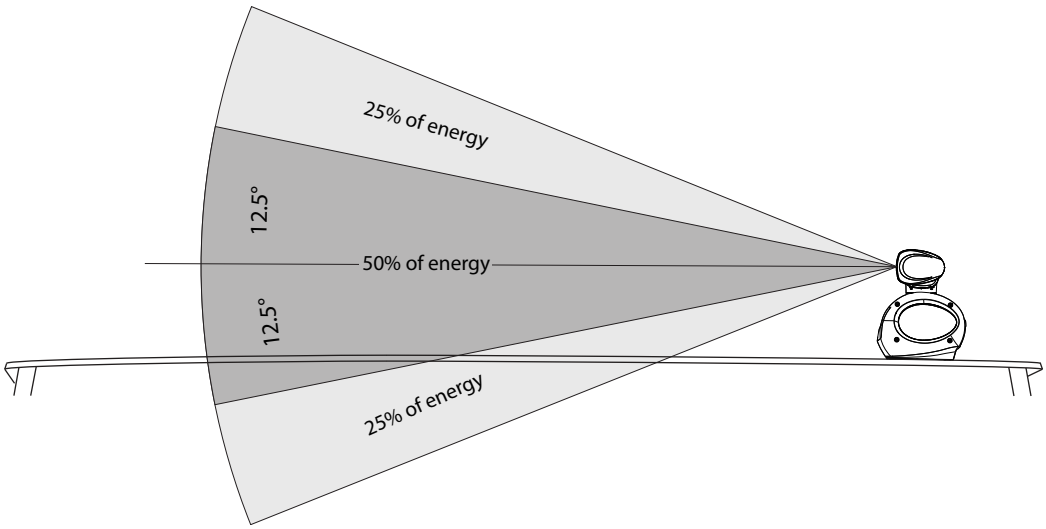

Good performance

Raising the radar off the hard top allows most of the radar beam to clear the hard top.

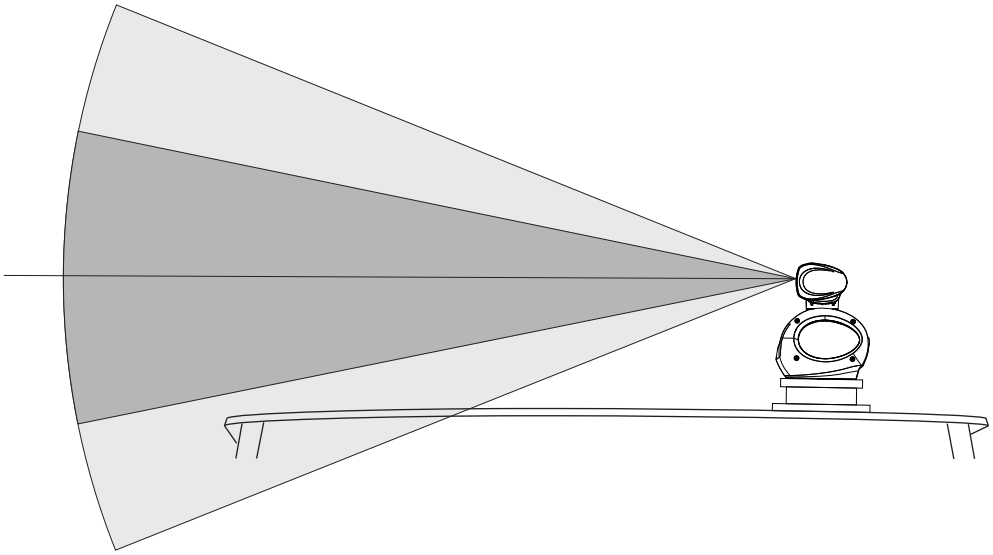

Best performance

For best performance, the radar should be positioned to allow the full beam to clear the superstructure of the vessel.

→ *Note: If the mounting surface is made of metal, you must elevate the radar so the beam has complete clearance, otherwise its performance will be severely impaired.*

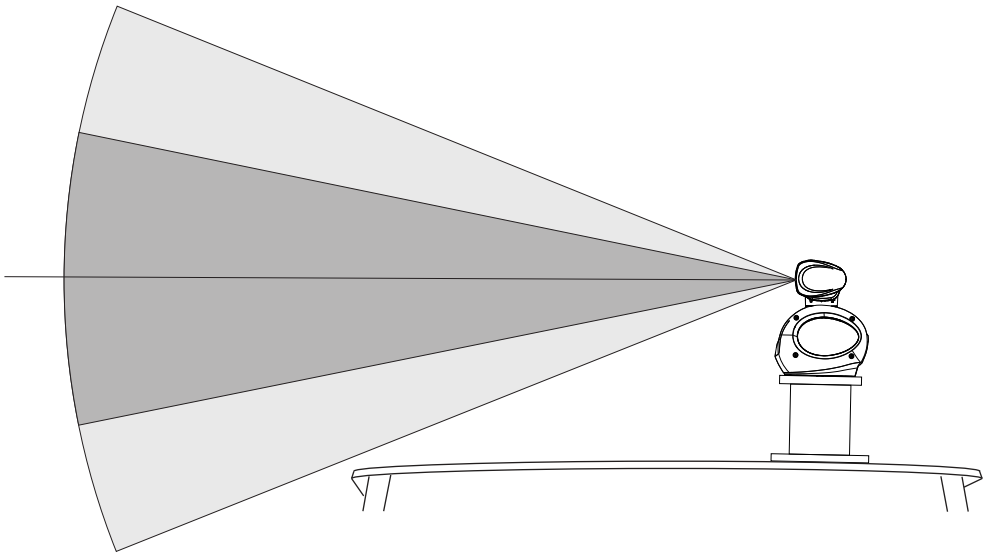

To calculate the antenna height for best performance, first measure the distance (**A**) from the installation location of the radar to the furthest forward corner of your vessel's hard top.

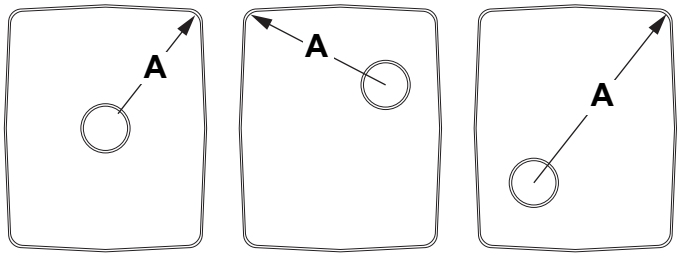

For every increase of 200 mm (7.9”) of hard top distance over 1.8 m (6.0”), increase the height of the antenna by 46 mm (1.8”).

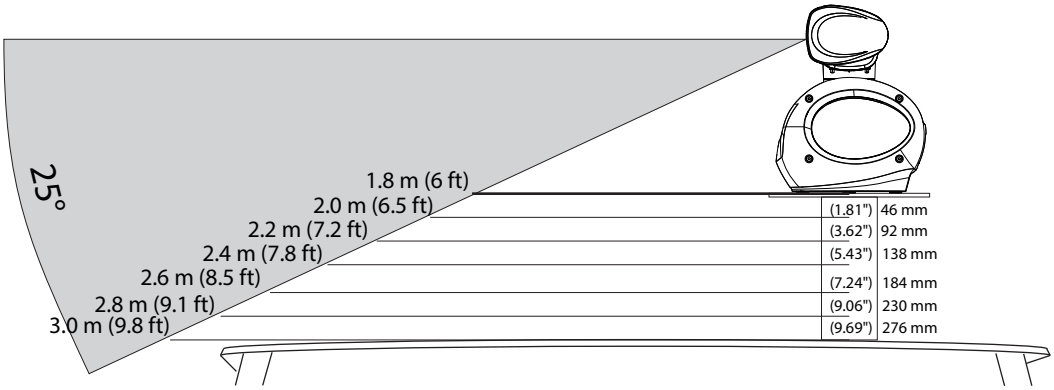

Install the RI-50 radar interface module

Install the RI-50 in a dry location away from spray, rain, drips, condensation or excessive heat. The mounting position should be easily accessible.

Always mount the RI-50 vertically, with the cable entry points facing downwards. This helps with cooling and helps prevent any water from entering the cable grommets.

Ensure there is enough unobstructed space above and below the RI-50 to ensure it cools adequately and the ambient temperature does not exceed 55°C (131°F). If overheating is a concern, consider additional ventilation, such as a vent or extraction fan.

⚠ **Warning: Inadequate ventilation and subsequent overheating of the unit may cause unreliable operation and reduced service life.**

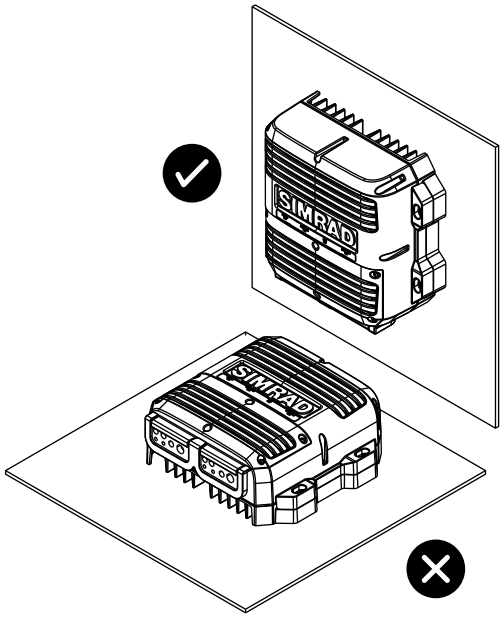

The RI-50 must be located where it can easily connect to the vessel's ground connection, the pedestal interconnection cable and the power cable.

Use fasteners suited to the mounting surface material. If you are using the supplied self-tapping screws with a soft material like plywood, use a 2.3 mm to 2.8 mm (3⁄32") drill bit. For hard materials like GRP, acrylic and hardwoods, use a 2.9 mm (7⁄64") drill bit. If the material is too thin for the self-tapping screws, reinforce it or use machine screws, nuts and washers. Use only 304 or 316 stainless steel fasteners.

Mark the screw locations using RI-50 box as a template, and drill pilot holes.

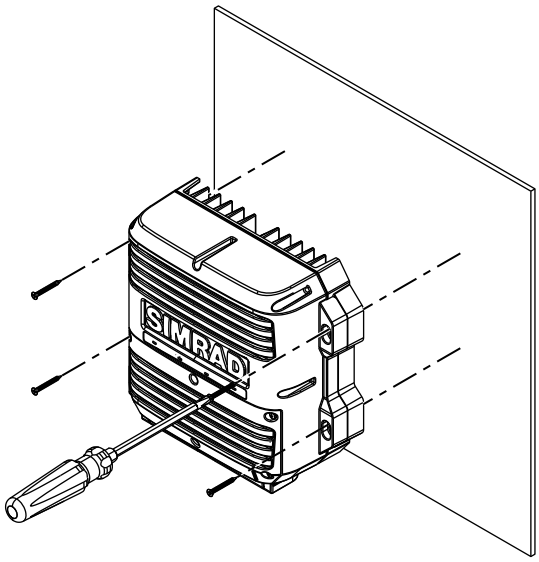

Run the interconnection cable

The interconnection cable is 10.5 mm (0.4") in diameter.

The 14-pin connector end of the cable connects to the pedestal. The RJ45 connector connects to the RI-50 radar interface module.

1 Drill a 14 mm hole to pass the RJ45 connector from the pedestal to the RI-50, or a 24 mm (0.95") hole to pass the 14-pin connector from the RI-50 to the pedestal.
2 To protect the connectors, especially the RJ45 connector, when pulling the cable through the vessel, connect a mouse line to the outer jacket of the interconnection cable so the strain of pulling is transferred to the strong outer jacket.
3 If there is enough clearance, use a small cable tie to secure the mouse line to the outer jacket.
4 Tape the wires and the RJ45 connector to the mouse line so they do not get caught and bend backwards.

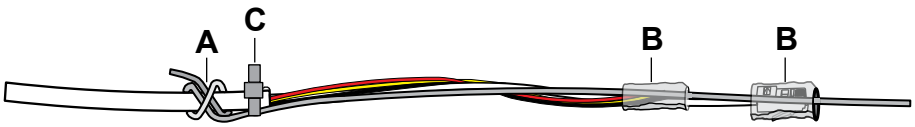

A	Mouse line
B	Electrical tape
C	Cable tie

5 Carefully pull the interconnection cable through the vessel so it runs between the RI-50 radar interface module and your chosen pedestal location.

Install the pedestal

⚠ **Warning: Leave the waveguide protection cap on the pedestal while you mount it to your vessel. You should only remove the cap just before you fit the antenna to the pedestal.**

Bolts and washers

The eight hex head bolts supplied are suitable for surfaces up to 25 mm (1") in thickness.

- Use the 4 x M12 x 35 mm (1.4") for a surface thickness from 5 mm (0.2") up to 13 mm (0.5").
- Use the 4 x M12 x 50 mm (2.0") for a surface thickness from 13 mm (0.5") up to 25 mm (1").

If using longer bolts, ensure they are marine-grade stainless steel and allow for a minimum of 12 mm (0.3") and maximum of 20 mm (0.7") of thread engagement in base of pedestal.

Use a flat washer and a spring washer for each bolt.

⚠ **Important: Apply a light coating of the supplied Tef-Gel or other suitable nickel- or PTFE-based lubricant to the mounting bolts to prevent galling and corrosion.**

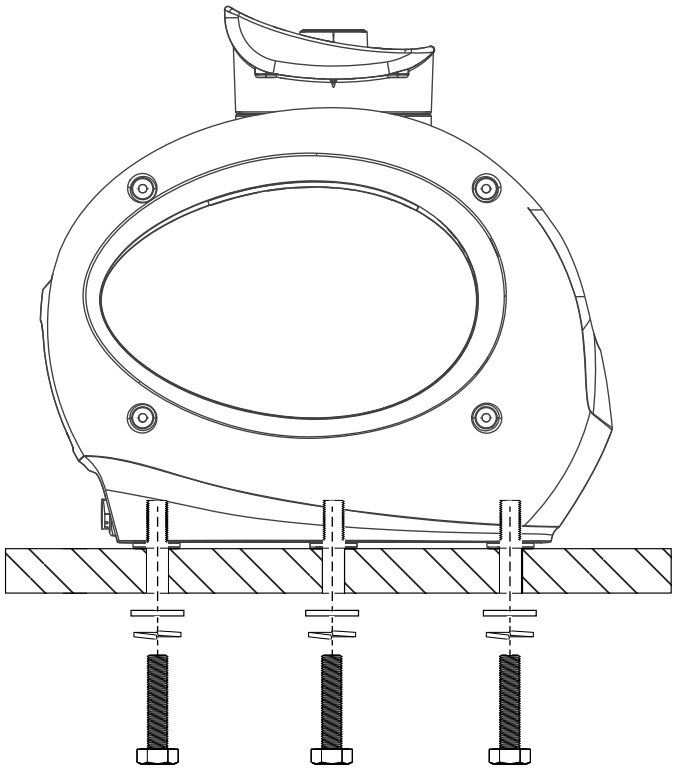

If you are installing the pedestal onto a steel surface, also use the supplied plastic isolating washers.

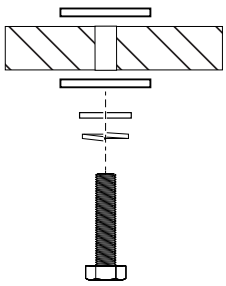

Surface mount: rear cable connection

1 Place the mounting template in your desired installation location, observing the correct orientation.

➔ *Note: You can compensate for any minor deviations in orientation later by using the radar's bearing alignment setting on your multi-function display.*

2 Check the location has enough room for the antenna to rotate.

3 Tape the template securely in place.

4 Drill pilot holes, then use a 13 mm (0.5”) drill bit to drill the four holes where shown on the mounting template.

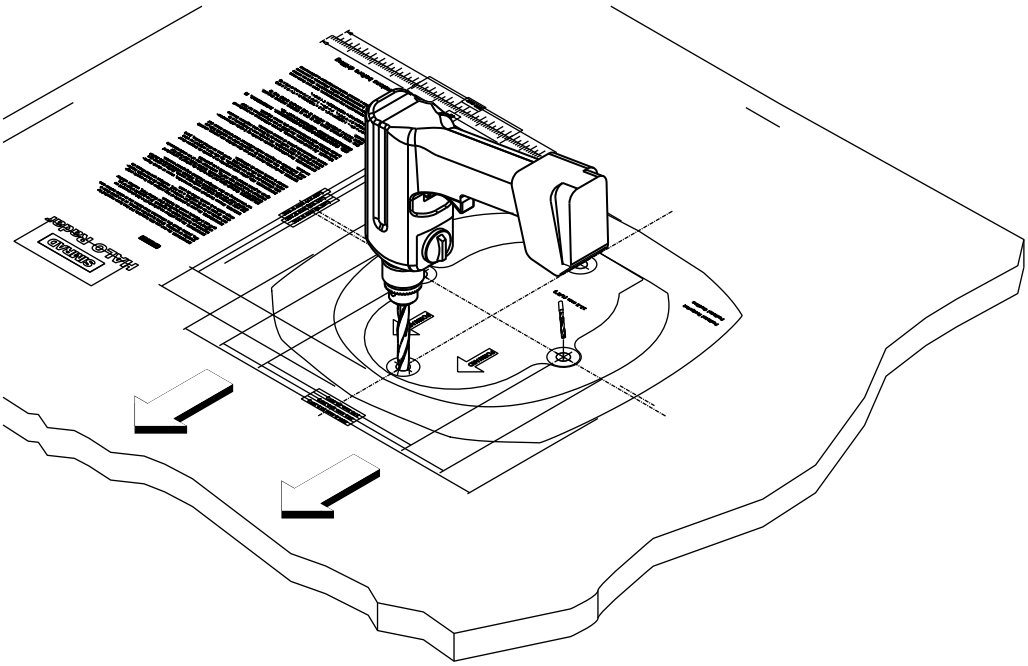

5 Remove the mounting template .
6 Apply the supplied Tef-Gel anti-corrosion gel to the four feet of the pedestal.
7 Lift the pedestal using the supplied lifting strap.

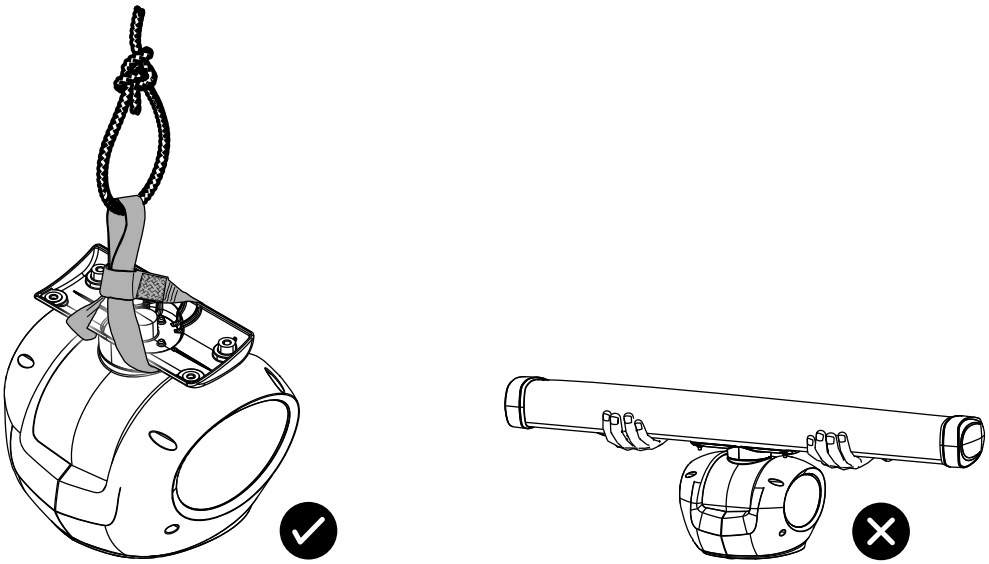

⚠ **Warning: Do not lift the pedestal with the antenna attached.**

8 Lower the pedestal carefully so its mounting holes align with the drilled holes in the vessel.
9 Place a flat washer and spring washer onto each bolt.
→ *Note: If you are installing the pedestal onto a steel surface, also use the supplied plastic isolating washers.*
10 Apply the Tef-Gel anti-corrosion gel to the threads of each bolt.

11 Insert the bolts through the drilled holes and into the pedestal's threaded mounting holes. Tighten the bolts securely.

→ *Note: The torque settings for the mounting bolts are 30 N.m – 40 N.m (22.1 lb-ft – 39.5 lb-ft).*

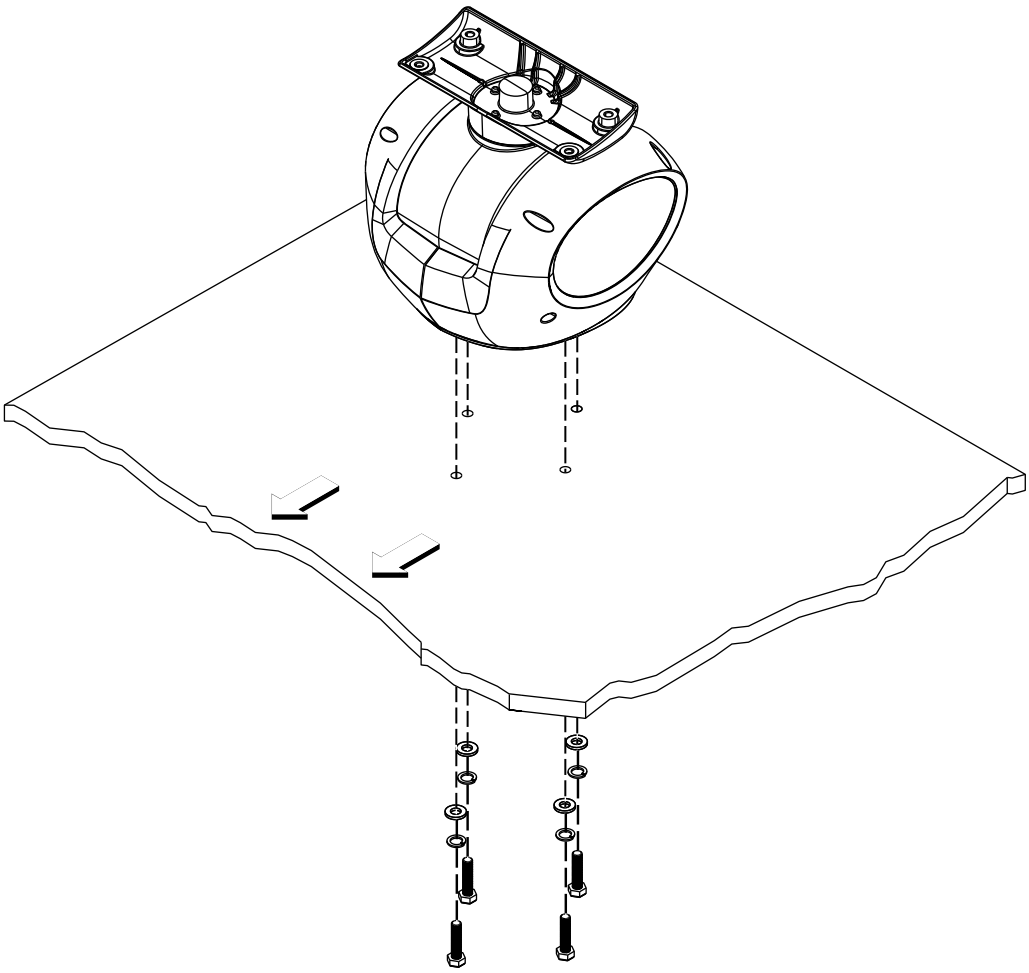

12 Connect the 14-pin end of the interconnection cable to the pedestal. Take care to align the connector correctly to avoid bending the pins. Secure the locking collar by rotating clockwise until it clicks.

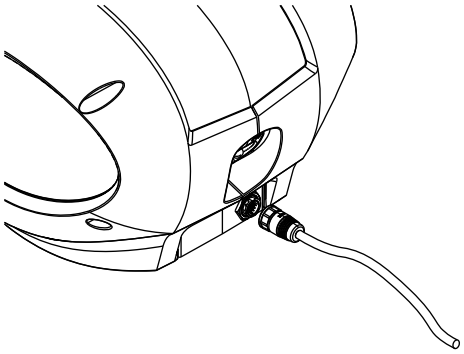

Pole or tower mount: discreet cable connection

The interconnection cable can be optionally connected underneath the pedestal by moving the 14-pin connector at the back of the pedestal to a bracket underneath the pedestal.

1 Remove the retaining nut and pull out the connector.

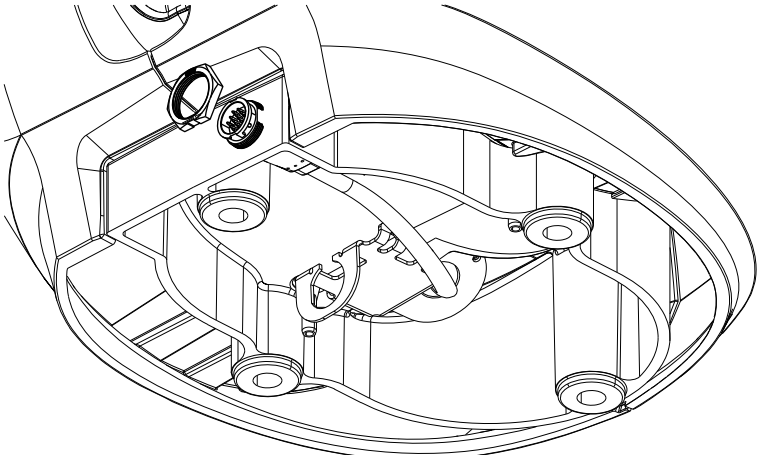

2 Remove the blanking plug from the bracket underneath the pedestal.

3 Insert the blanking plug where the connector used to be.

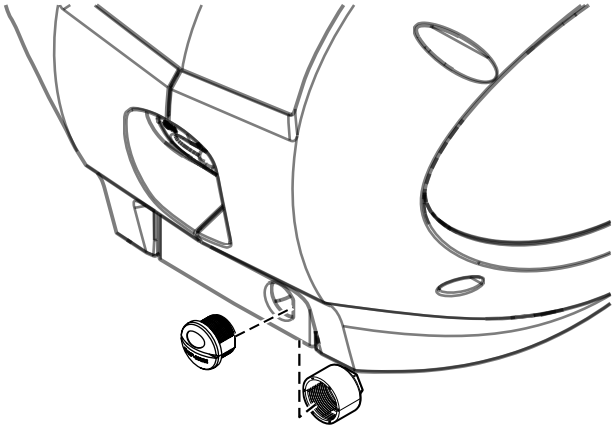

4 Re-route the connector to the bracket and secure it with the retaining nut.

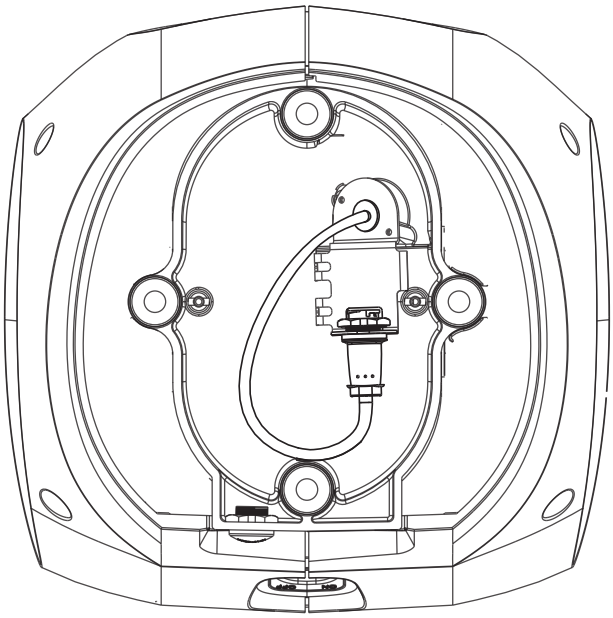

5 Connect the 14-pin end of the interconnection cable to the pedestal. Take care to align the connector correctly to avoid bending the pins. Secure the locking collar by rotating clockwise until it clicks.

6 Apply the supplied Tef-Gel anti-corrosion gel to the four feet of the pedestal.

7 Lower the pedestal so its mounting holes align with the drilled holes in the mounting plate.

8 Place a flat washer and spring washer onto each bolt.

9 Apply the Tef-Gel anti-corrosion gel to the threads of each bolt.

10 Insert the bolts through the drilled holes and into the pedestal's threaded mounting holes. Tighten the bolts securely.

➔ *Note: The torque settings for the mounting bolts are 30 N.m – 40 N.m (22.1 lb-ft – 39.5 lb-ft).*

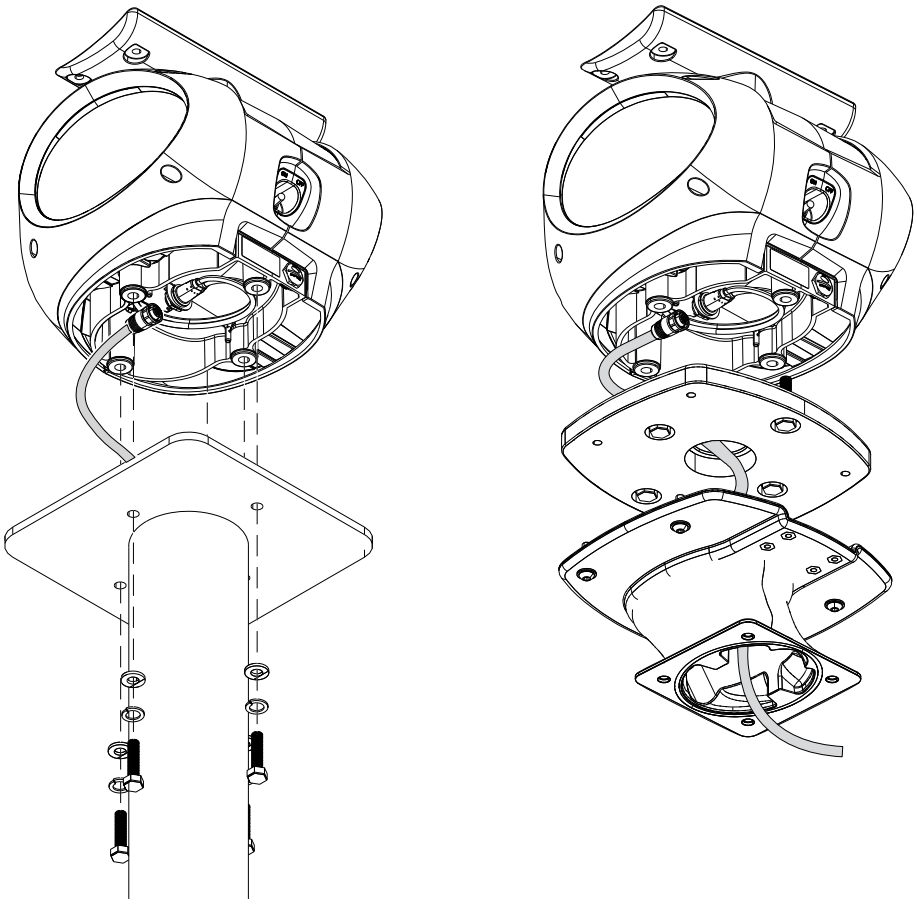

Fit the antenna to the pedestal

⚠ **Warning: Do not operate the radar without the antenna connected.**

1 Remove the waveguide protection cap from the pedestal and the waveguide protection label from the underside of the antenna.

➔ *Note: The cap and label prevent contaminants from entering the waveguide. You should only remove these covers just before you fit the antenna to the pedestal.*

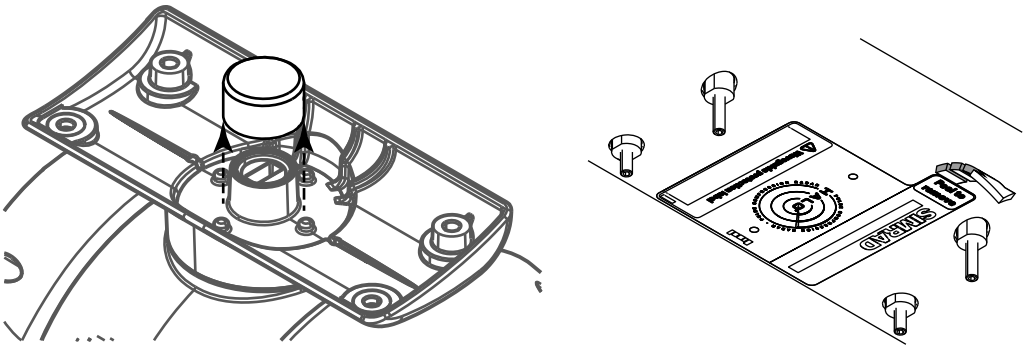

2 On the antenna, check the sealing ring is correctly positioned in the groove around the waveguide.

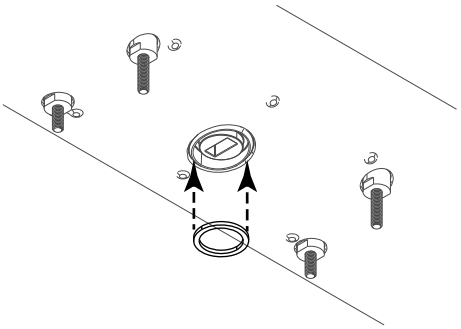

3 Apply the supplied Tef-Gel anti-corrosion gel to the entire length of each of the four antenna studs.

→ *Note: If black, isolating washers are factory fitted at the top of the antenna studs, do not remove.*

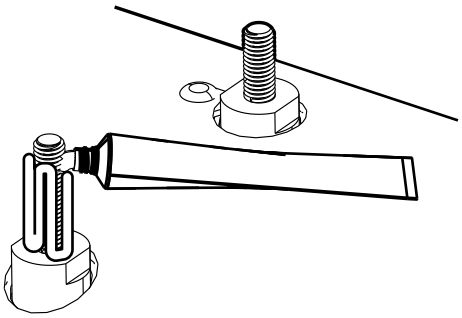

4 Carefully lower the antenna on to the pedestal.

→ *Note: The antenna can only fit one way.*

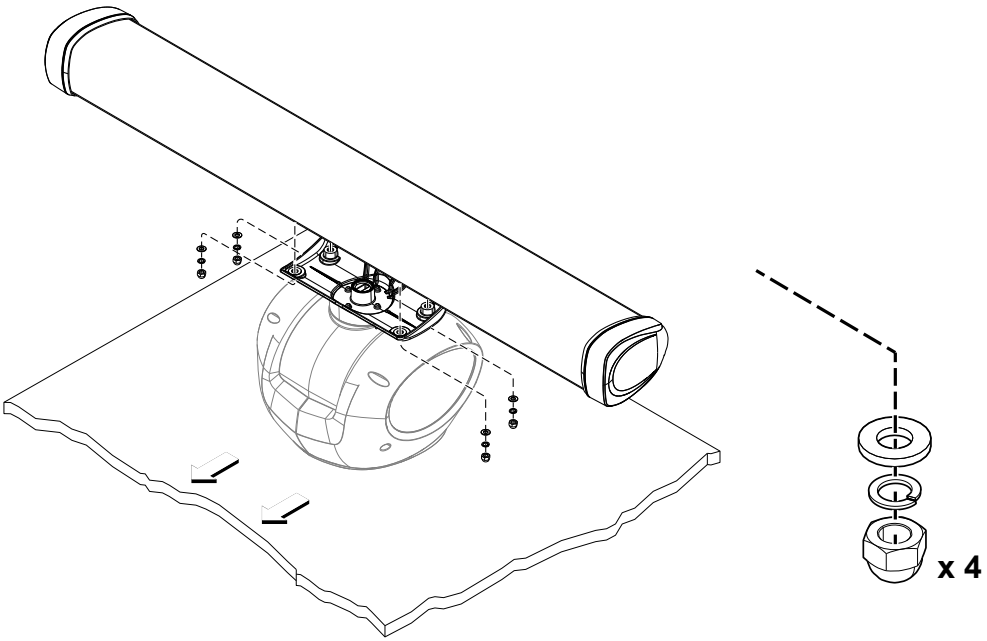

5 Place a flat washer then a spring washer followed by a dome nut on to each of the antenna studs.

→ *Note: If black, isolating washers are factory fitted on the underside of the stud holes, do not remove.*

6 Tighten the dome nuts using a socket and torque wrench to 15 N.m (11 lb-ft).

→ *Note: Using a socket and torque wrench minimizes the risk of damaging the powder coated surface of the pedestal.*

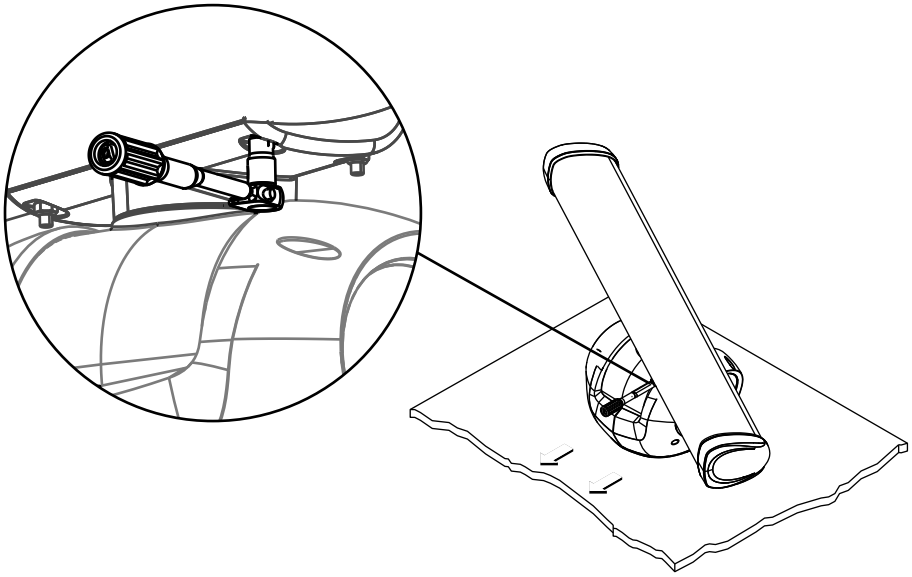

WIRING

RI-50 circuit board

All wiring connections, except GND, are made inside the RI-50 interface box.

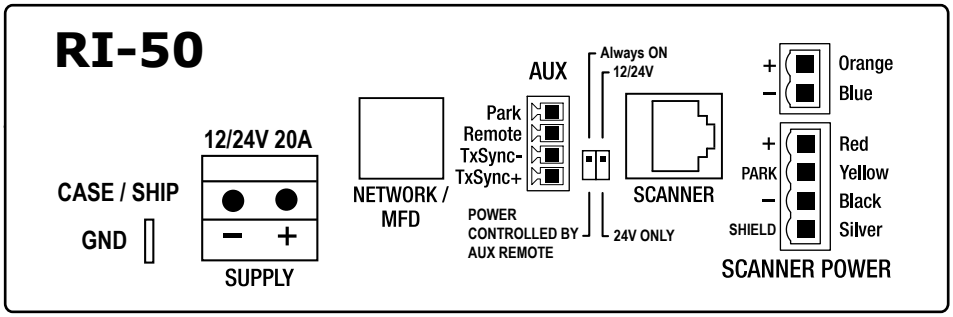

Connector	Description
CASE / SHIP GND	Alternative chassis ground connection.
SUPPLY	12 or 24 V DC input 12 volt system limits 10.8 V DC to 15.6 V DC 24 volt system limits 20 V DC to 31.2 V DC
NETWORK / MFD	Connects the radar to the multi-function display.
AUX	Inputs for the antenna park brake and remote power functions. Note: The TxSync and TxSync+ inputs are reserved for future functionality.
POWER CONTROL	Switch that sets the radar's power to: • **Always ON** (the radar turns on when power is applied to the radar's main power connector), or • **POWER CONTROLLED BY AUX REMOTE** (the radar turns on when a remote multi-function display or power control switch is turned on).
12/24V - 24V ONLY	Switch that sets to: • **12/24V** (default), or • **24V ONLY** (select to protect a 24V battery system from over discharge)
SCANNER	Input for receiving Ethernet data from the pedestal and sending control signals.
SCANNER POWER	2-way and 4-way connectors that provide 50 V DC up to the pedestal and power for the park brake.

Run the cables

⚠ **Warning: The pedestal has a service mode switch, which disables power supply to the radar and stops the antenna rotating during maintenance and service.**

1 Check the service mode switch at the back of the pedestal is set to **0** (power supply disabled).

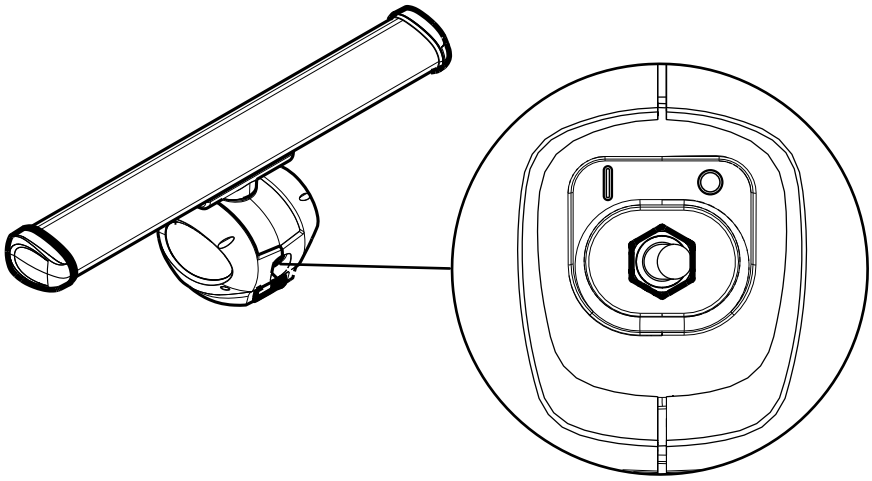

2 Remove the circuit board cover from the RI-50 by unscrewing the six retaining screws.
3 Remove the grommet retaining clip.
4 Remove the rubber grommets.

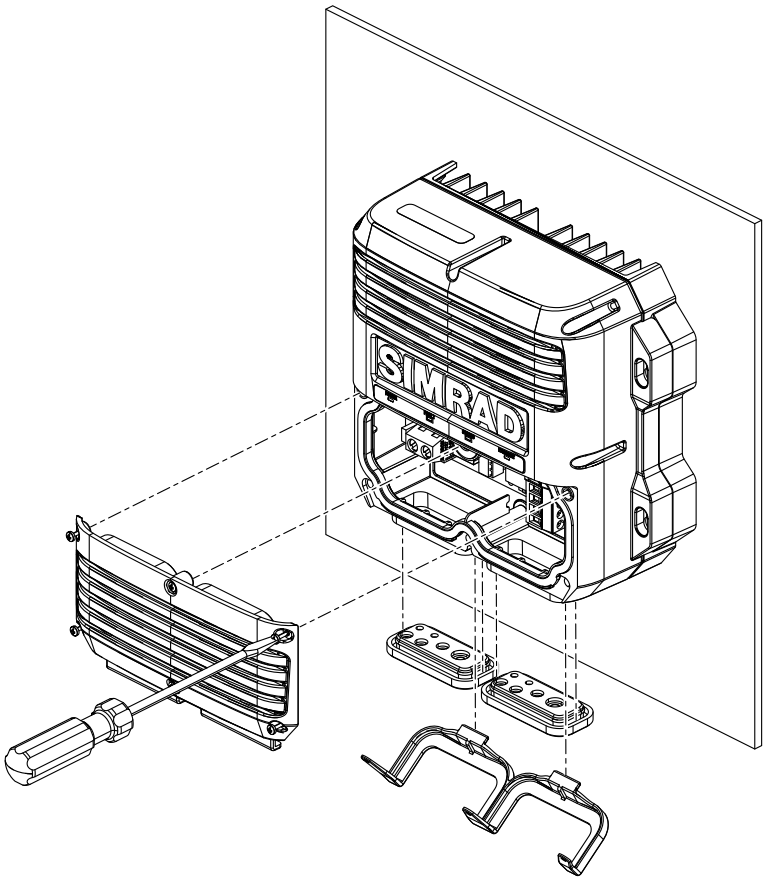

5 Line the following cables up so they face their respective connector on the circuit board:
- Power cable
- Ethernet adapter cable
- Pedestal interconnection cable
- Any AUX wires for the remote power and antenna park brake functions

6 Pass the cables through the rubber grommets and into the RI-50. For cables with connectors, you need to cut a slit between the hole and edge of the grommet.

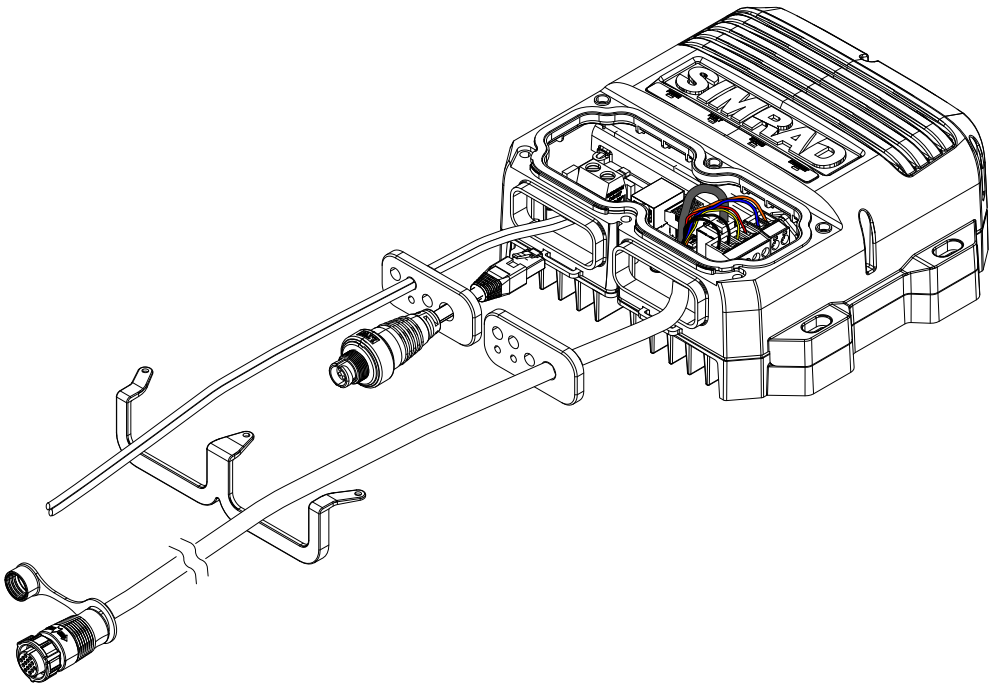

Connect the interconnection cable

To receive Ethernet data from the radar, connect the RJ45 connector end of the interconnection cable to the SCANNER connector on the circuit board.
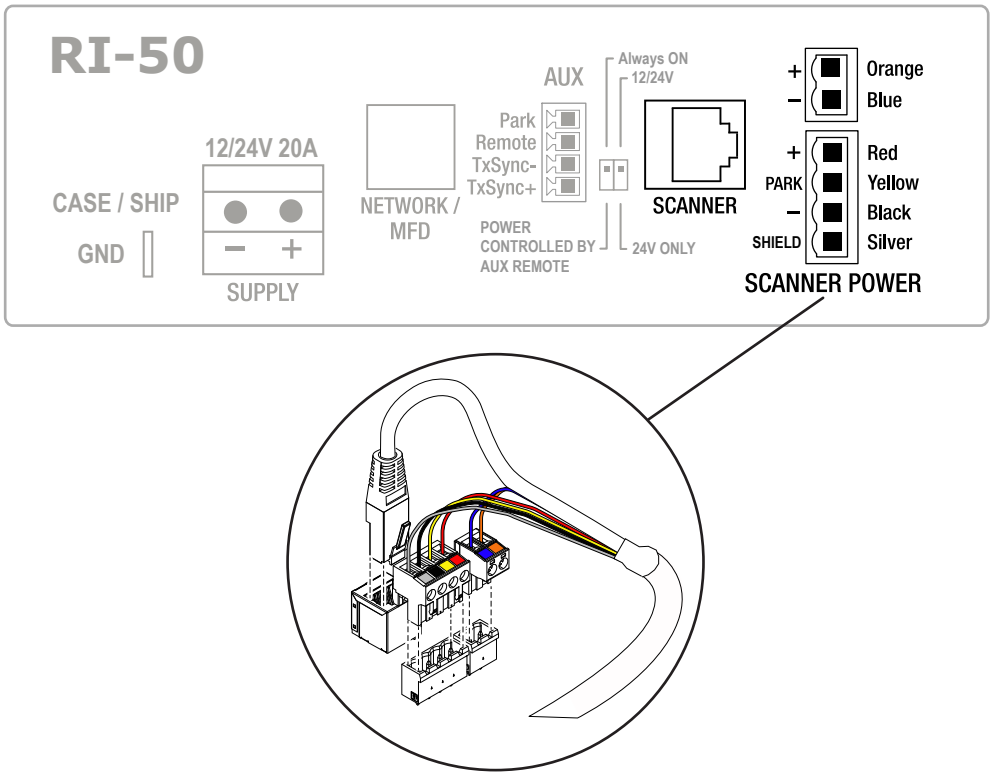
To provide power to the radar and park brake, connect the six wires of the interconnection cable to the 4-way and 2-way SCANNER POWER connectors on the circuit board, matching the color-coded stickers on the connectors with the wire colors.