Draft 23.10.2019

LOWRANCE

SIMRAD

B&G

Halo20, 20+ and 24 Dome Radars

Installation Manual

ENGLISH

www.lowrance.com
www.simrad-yachting.com
www.bandg.com

Draft 23.10.2019

Draft 23.10.2019

Preface

Disclaimer

As Navico is continuously improving this product, we retain the right to make changes to the product at any time which may not be reflected in this version of the manual. Please contact your nearest distributor if you require any further assistance.

It is the owner's sole responsibility to install and use the equipment in a manner that will not cause accidents, personal injury or property damage. The user of this product is solely responsible for observing maritime safety practices.

NAVICO HOLDING AS AND ITS SUBSIDIARIES, BRANCHES AND AFFILIATES DISCLAIM ALL LIABILITY FOR ANY USE OF THIS PRODUCT IN A WAY THAT MAY CAUSE ACCIDENTS, DAMAGE OR THAT MAY VIOLATE THE LAW.

This manual represents the product as at the time of printing. Navico Holding AS and its subsidiaries, branches and affiliates reserve the right to make changes to specifications without notice.

Governing language

This statement, any instruction manuals, user guides and other information relating to the product (Documentation) may be translated to, or has been translated from, another language (Translation). In the event of any conflict between any Translation of the Documentation, the English language version of the Documentation will be the official version of the Documentation.

Copyright

Copyright © 2019 Navico Holding AS.

Warranty

The warranty card is supplied as a separate document.

In case of any queries, refer to the brand web site of your display or system:

www.lowrance.com

www.simrad-yachting.com

www.bandg.com

Compliance statement

Europe

This equipment complies with CE under RED Directive 2014/53/EU. The relevant Declaration of conformity is available in the product's section at the following websites:

www.lowrance.com

www.simrad-yachting.com

www.bandg.com

United States of America

Part 15 of the FCC Rules. Operation is subject to the following two conditions: (1) this device may not cause harmful interference, and (2) this device must accept any interference received, including interference that may cause undesired operation.

> ⚠ **Warning:** The user is cautioned that any changes or modifications not expressly approved by the party responsible for compliance could void the user's authority to operate the equipment.

RF emissions notice

This equipment complies with FCC radiation exposure limits set forth for an uncontrolled environment.

This device's antenna must be installed in accordance with provided instructions, and it must

Draft 23.10.2019

be operated with minimum 0.1 m (0.33 ft) for Halo24, 1.0 m (3.30 ft) for Halo20 and 1.6 m (5.24 ft) for Halo20+ spacing between the antennas and all person's body (excluding extremities of hands, wrist and feet) during operation.

→ ***Note:*** This equipment has been tested and found to comply with the limits for a Class B digital device, pursuant to Part 15 of the FCC Rules. This equipment generates, uses and can radiate radio frequency energy and, if not installed and used in accordance with the instructions, may cause harmful interference to radio communications. However, there is no guarantee that the interference will not occur in a particular installation. If this equipment does cause harmful interference to radio or television reception, which can be determined by turning the equipment off and on, the user is encouraged to try to correct the interference by one or more of the following measures:

- Reorient or relocate the receiving antenna
- Increase the separation between the equipment and receiver
- Connect the equipment into an outlet on a circuit different from that of the receiver is connected
- Consult the dealer or an experienced technician for help

Canada

This device complies with Industry Canada's license-exempt RSSs. Operation is subject to the following two conditions:

(1) This device may not cause interference; and

(2) This device must accept any interference, including interference that may cause undesired operation of the device.

Le présent appareil est conforme aux CNR d'Industrie Canada applicables aux appareils radio exempts de licence. L'exploitation est autorisée aux deux conditions suivantes:

(1) l'appareil ne doit pas produire de brouillage, et.

(2) l'utilisateur de l'appareil doit accepter tout brouillage radioélectrique subi, même si le brouillage est susceptible d'en compromettre le fonctionnemen.

Industry Canada Statement

Under Industry Canada regulations, this radio transmitter may only operate using an antenna of a type and maximum (or lesser) gain approved for the transmitter by Industry Canada. To reduce potential radio interference to other users, the antenna type and its gain should be so chosen that the equivalent isotropically radiated power (e.i.r.p.) is not more than that necessary for successful communication.

Conformément à la réglementation d'Industrie Canada, le présent émetteur radio peut fonctionner avec une antenne d'un type et d'un gain maximal (ou inférieur) approuvé pour l'émetteur par Industrie Canada. Dans le but de réduire les risques de brouillage

radioélectrique à l'intention des autres utilisateurs, il faut choisir le type d'antenne et son gain de sorte que la puissance isotrope rayonnée quivalente (p.i.r.e.) ne dépassepas l'intensité nécessaire à l'établissement d'une communication satisfaisante.

This radio transmitter (identify the device by certification number, or model number if Category I) has been approved by Industry Canada to operate with the antenna types listed below with the maximum permissible gain and required antenna impedance for each antenna type indicated. Antenna types not included in this list, having a gain greater than the maximum gain indicated for that type, are strictly prohibited for use with this device.

Le présent émetteur radio (identifier le dispositif par son numéro de certification ou son numéro de modèle s'il fait partie du matériel de catégorie I) a été approuvé par Industrie Canada pour fonctionner avec les types d'antenne énumérés ci-dessous et ayant un gain admissible maximal et l'impédance requise pour chaque type d'antenne. Les types d'antenne non inclus dans cette liste, ou dont le gain est supérieur au gain maximal indiqué, sont strictement interdits pour l'exploitation de l'émetteur.

Draft 23.10.2019

Halo Antennas	Max. permissible antenna gain (dBi)	Impedance
Halo 20 Radar	22.5 dBi	Not applicable
Halo20+ Radar		
Halo24 Radar	23.5 dBi	

Radio Frequency (RF) Exposure table

System	100 W/m2 occupational safe distance	10 W /m2 public safe distance
Halo20 Radar	0.0 m (0.0 ft)	1.0 m (3.30 ft)
Halo20+ Radar		1.6 m (5.24 ft)
Halo24 Radar		0.1 m (0.33 ft)

Trademarks

Navico® is a registered trademark of Navico Holding AS.

Lowrance® is a registered trademark of Navico Holding AS.

Simrad® is used by license from Kongsberg.

B&G® is a registered trademark of Navico Holding AS.

About this manual

This manual is a reference guide for installing the Halo dome radar.

Important text that requires special attention from the reader is emphasized as follows:

→ ***Note:*** Used to draw the reader's attention to a comment or some important information.

⚠ **Warning:** Used when it is necessary to warn personnel that they should proceed carefully to prevent risk of injury and/or damage to equipment/personnel.

Draft 23.10.2019

Contents

3 Preface
3 Disclaimer
3 Copyright
3 Warranty
3 Compliance statement
5 Radio Frequency (RF) Exposure table
5 Trademarks
5 About this manual

7 Introduction
7 Parts included

8 Installation
8 Wiring guidelines
9 Choose the scanner location
10 Considerations for roof mounting
13 Wiring overview
14 Scanner connection
15 Installing the scanner
16 Ethernet connection
18 Power connection
19 Power control connection

20 Setup and configuration

21 Maintenance

22 Replacing a Broadband 3G/4G Radar
22 RI-10 Radar interface box and wiring

23 Troubleshooting
23 Status LED
23 Error messages
24 Error codes

25 Dimensional drawings
25 Halo dome radar dimensions

27 Technical specifications
27 Halo20/20+ Radar
28 Halo24 Radar

29 Accessories

Draft 23.10.2019

1 Introduction

Parts included

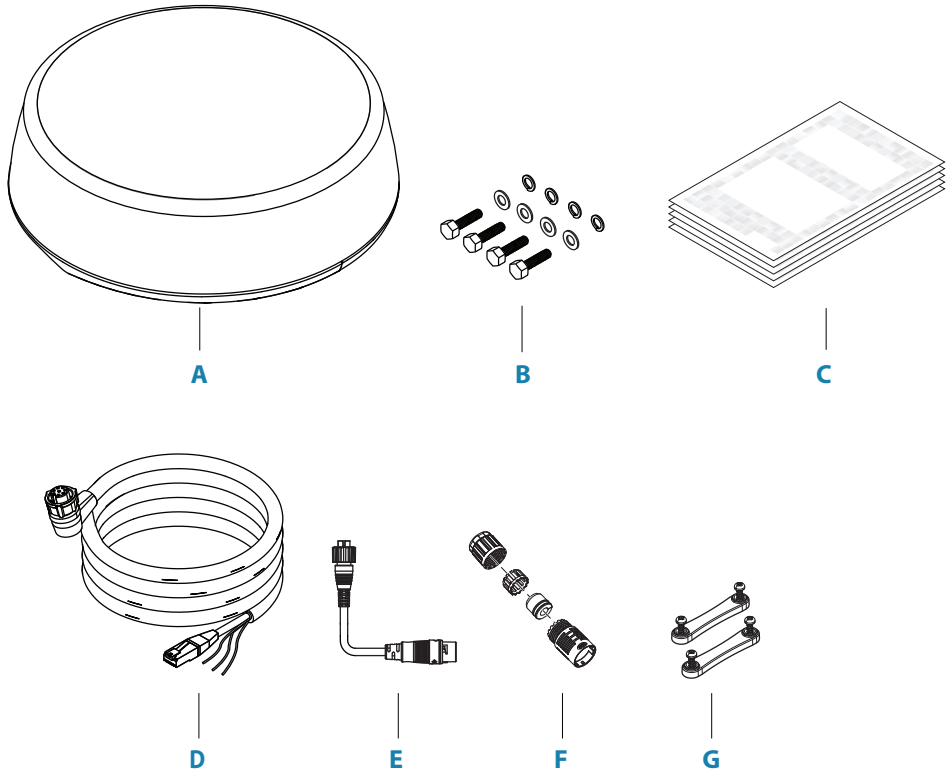

A Halo Radar

B Mounting bolts and washers

- Hex bolt (M8x30), 4x
- Flat washer, 4x
- Spring washer, 4x

C Documentation pack

D Interconnection cable

E Ethernet adapter RJ45 to 5-pin, 1.5m (4.9 ft)

F Waterproof cable boot for interconnection cable RJ45 plug

G Cable retainer kit

- Cable retainer clip, 2x
- Screw (Phillips drive), 4x

Draft 23.10.2019

2 Installation

→ ***Note:*** The Halo Radar is factory sealed. Removing the cover will void the factory warranty.

→ ***Note:*** If replacing an already installed Broadband 3G/4G Radar, refer to "Replacing a Broadband 3G/4G Radar" on page 22.

Wiring guidelines

Safely pulling the interconnection cable

- Connect a mouse line to the outer jacket of the radar interconnection cable so that the strain of pulling is transferred to the stronger outer jacket of the cable. Use some small cable ties to secure the mouse line to the outer jacket as well if there is sufficient clearance.
- Tape the conductors and tape the RJ45 connector to the mouse line so that it does not get caught and bent backwards.

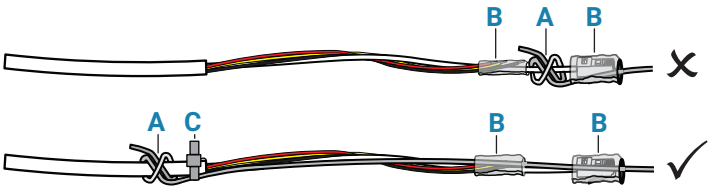

A Mouse line
B Electrical tape
C Cable tie

Do:

- make drip and service loops
- use cable-ties on all cables to keep them secure
- solder/crimp and insulate all wiring connections if extending or shortening the cables
- use the appropriate length of ready-made interconnection cable
- leave room adjacent to device to ease plugging and unplugging of connectors

Do not:

- make sharp bends in the cables
- run cables in a way that allows water to flow down into the connectors
- run the data cables adjacent to radar, transmitter, or large/high current carrying cables or high frequency signal cables
- run cables so they interfere with mechanical systems
- run cables over sharp edges or burrs
- attach a mouse line directly to the Ethernet cable or connector

⚠ **Warning:** Before starting the installation, be sure to turn electrical power off. If power is left on or turned on during the installation, fire, electrical shock, or other serious injury may occur.

⚠ **Warning:** The positive supply wire (red) should always be connected to (+) DC with the supplied fuse or a circuit breaker (closest available to fuse rating). Be sure that the voltage of the power supply is compatible with the unit.

Draft 23.10.2019

Choose the scanner location

The radar's ability to detect targets greatly depends on the position of its scanner. The ideal location for the scanner is high above the vessel's keel line where there are no obstacles.

When you are deciding on the location, consider the following:

A higher installation position increases the radar ranging distance, but it also increases the minimum range around the vessel where targets cannot be detected. Higher installation height also reduces the ability of the radar to detect targets in sea clutter.

The length of the interconnection cable supplied with your radar is sufficient for the majority of installations. If you think you'll need a longer cable, consult your dealer before installation. Optional cable lengths are 5 m (16 ft) 10 m (33 ft), 20 m (65.5 ft) and 30 m (98 ft).

If you mount the scanner on a pedestal or base, ensure that rain and sea spray can drain away rapidly, and the breather hole (**A**) in the base can operate.

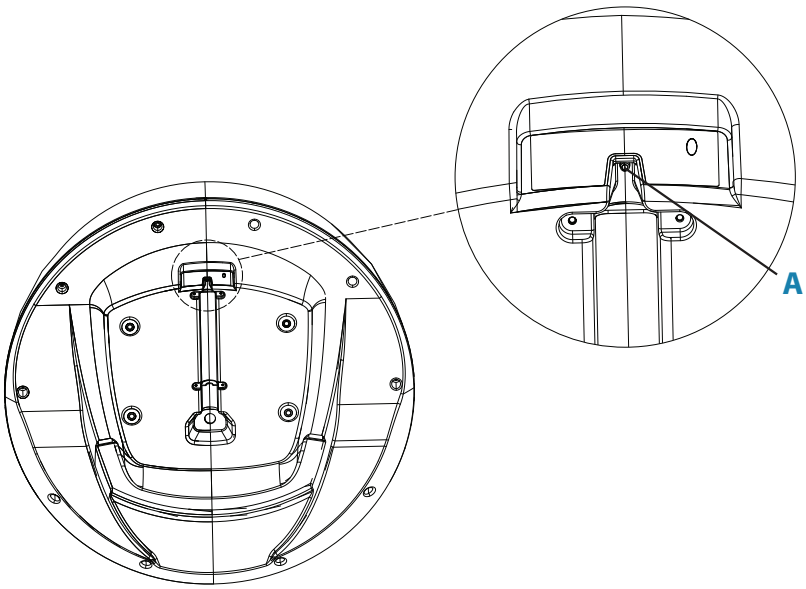

The scanner should, where possible, be installed parallel to the line of the keel.

Do not install the scanner:

- directly on to a large flat roof area. Use a pedestal to elevate the scanner so the radar beam clears the roof line. Refer to "Considerations for roof mounting" on page 10
- too high up (eg at the top of a mast), which may cause degradation of the radar picture over short ranges
- close to lamps or exhaust outlets. The heat emissions may damage the dome. Soot and smoke will degrade the performance of the radar
- close to the antennas of other equipment such as direction finders, VHF antennas, GPS equipment, as it may cause or be subject to interference
- where a large obstruction (such as an exhaust stack) is at the same level as the beam, the obstruction is likely to generate false echoes and/or shadow zones
- where it will be subjected to strong vibrations. Vibrations could degrade the performance or service life of the radar

Warning: For dual radar installations, ensure the Halo Radar is not installed in the beam of a pulse radar at any time.

Draft 23.10.2019

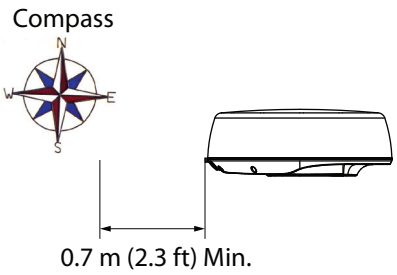	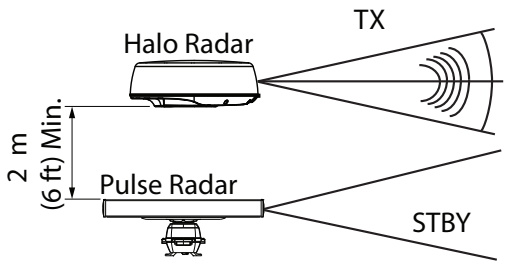
Minimum distance to install near the ships compass is 0.7 m (2.3 ft).	Do not install the Halo Radar on the same beam plane as a conventional pulse radar. A pulse radar must be set to STBY or OFF any time the Halo Radar is being operated.
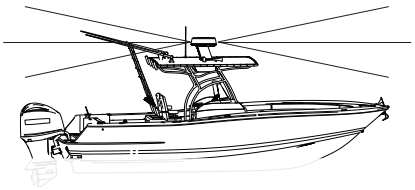	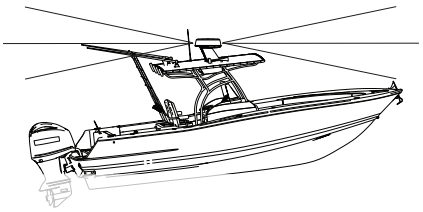
If possible, ensure that the mounting location provides the scanner with a clear view all round the vessel.	If installed on power boats that have a steep planing angle, it is recommended to tilt the scanner angle down at the front.

Considerations for roof mounting

When deciding a suitable mounting location for the Halo Radar, be aware that the vertical radar beam extends 25° above and below horizontal for Halo20/20+ and 22° above and below horizontal for Halo24. 50% of the power projects in a beam 12.5° above and below horizontal for Halo 20/20+ and 11° above and below horizontal for Halo24. If the radar beam cannot clear the roof line, this will decrease performance of the radar. Depending on the size of the hard top of the vessel, it is recommended to elevate the antenna to allow the radar beam to clear the roof line.

→ ***Note:*** Where the mounting surface is constructed of any form of metal you must elevate the radar so that the beam has complete clearance, as per Optimum performance section, else performance will be severely impaired.

Determine scanner height

This is a guide to determine scanner height in relation to the furthest forward corner of the hard top.

Measure the distance (**A**) from the Halo Radar to the furthest forward corner of the hard top.

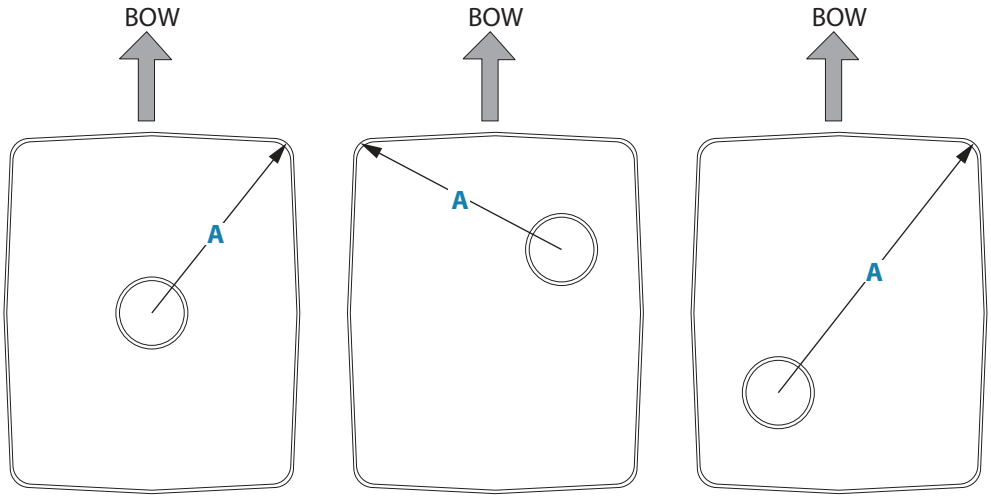

Use the following illustrations to determine the height of the scanner in relation to distance (**A**).

Draft 23.10.2019

Possible performance loss

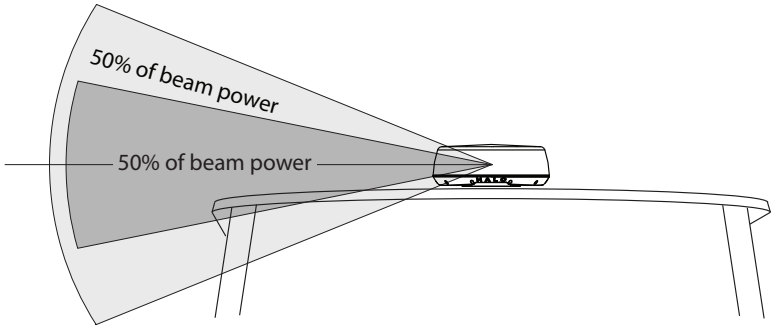

Above illustrates an installation with the Halo Radar mounted directly on to a large hard top. This installation could suffer decreased performance as the radar energy is either reflected or absorbed by the hard top.

→ ***Note:*** Where the mounting surface is constructed of any form of metal you must elevate the dome so that the beam has complete clearance, else performance will be severely impaired.

Good performance

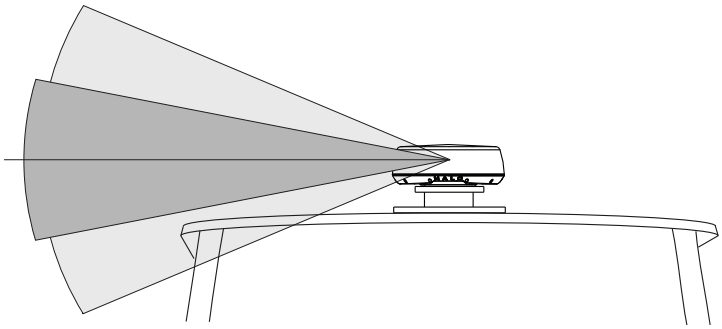

The image above illustrates that raising the radar scanner off the hard top allows most of the radar energy to clear the hard top.

Halo20/20+ Radar

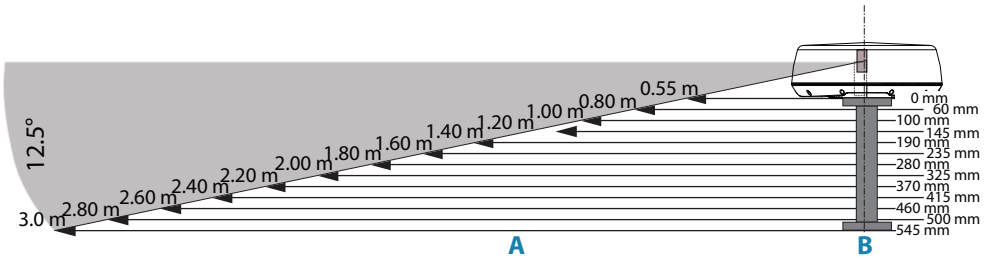

For every increase of 200 mm (7.87") of dimension (**A**), increase the height (**B**) by 45 mm (1.77").

Halo24 Radar

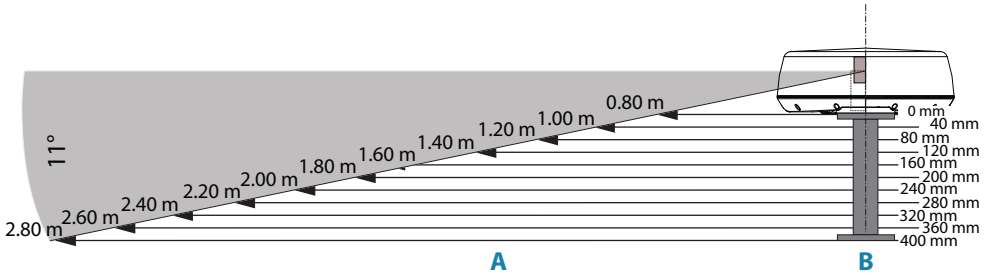

For every increase of 200 mm (7.87") of dimension (**A**), increase the height (**B**) by 40 mm (1.57").

Draft 23.10.2019

Optimum performance

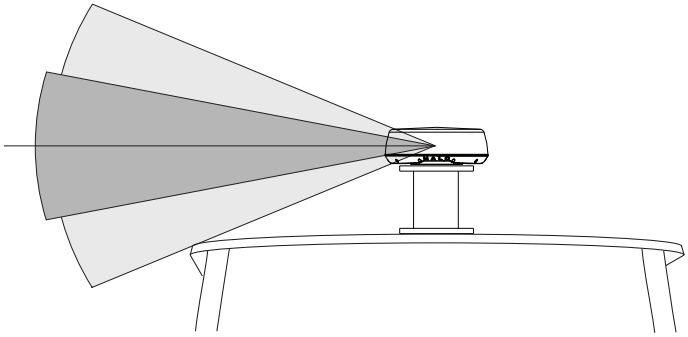

For best performance, the radar should be positioned to allow the full beam to clear the superstructure of the boat.

Halo20/20+ Radar

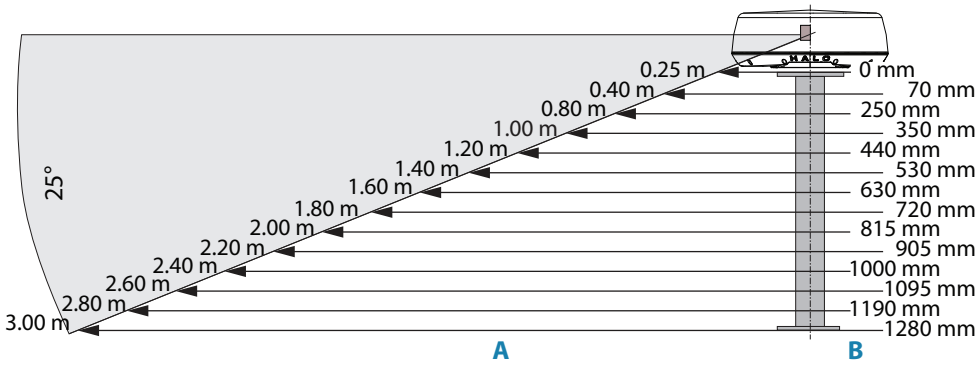

For every increase of 200 mm (7.87") of dimension (**A**), increase the height (**B**) by 90 mm (3.54").

Halo24 Radar

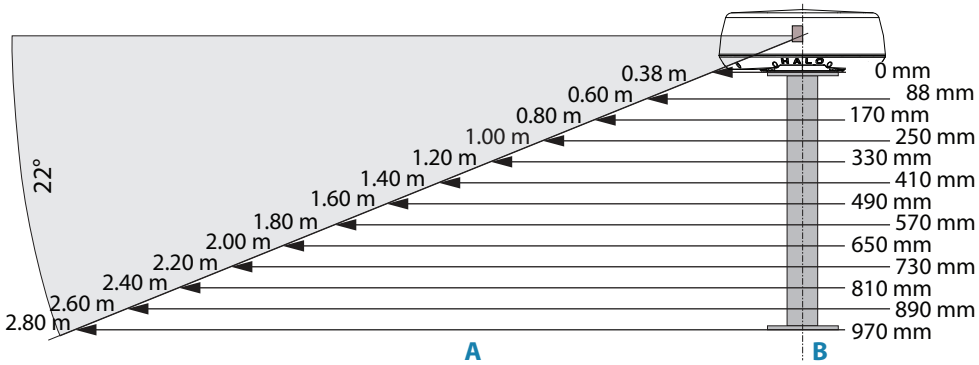

For every increase of 200 mm (7.87") of dimension (**A**), increase the height (**B**) by 80 mm (3.14").

Draft 23.10.2019

Halo light

➔ ***Note:*** Only available for Halo20+ and Halo24 Radars.

The Halo Radar has a blue accent light that can be activated from the display unit. Refer to "Setup and configuration" on page 20.

> ⚠ **Warning:** Halo Radar's lighting may not be approved for use in your boating location. Please check your local boating regulations before turning the blue accent lights ON.

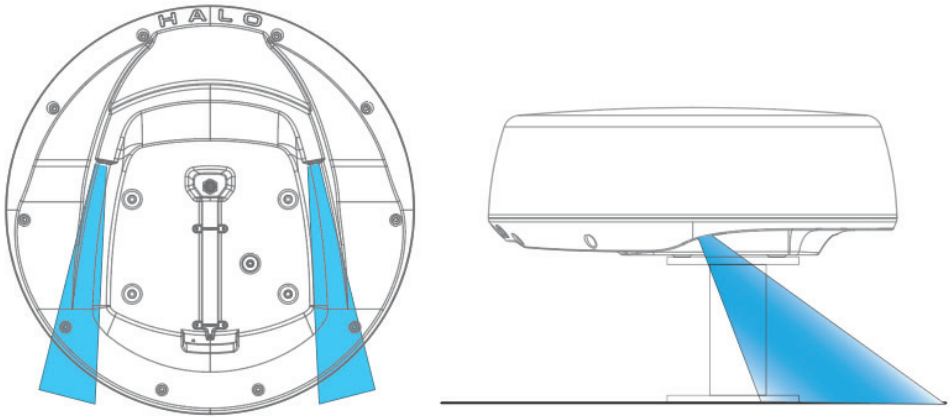

Wiring overview

Run the interconnection cable between the scanner and the display unit or Ethernet switch.

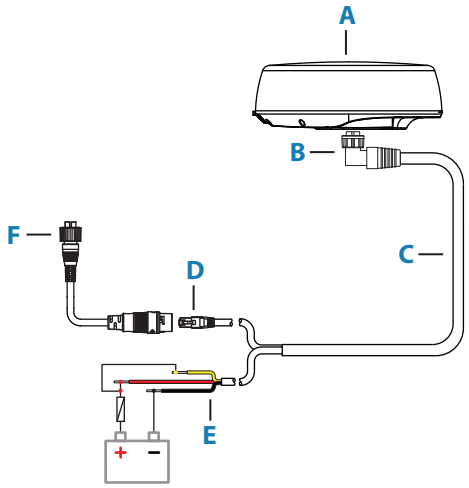

A Halo Radar
B Scanner connector
C Interconnection cable
D Ethernet connector
E Power wires
F Ethernet adapter RJ45 to 5-pin (optional)

Draft 23.10.2019

Scanner connection

→ ***Note:*** If replacing an existing Broadband 3G/4G Radar, refer to "Replacing a Broadband 3G/4G Radar" on page 22.

The scanner interconnection cable connects to the scanner using an 8 pin connector.

1. Insert interconnection cable connector into the socket on the scanner, rotating locking collar clockwise until it clicks.
2. Place the cable into the cable retention channel.
3. Install the two cable retainers (**A**) using the supplied screws. Tighten the screws gently.

→ ***Note:*** If routing the interconnection cable down through a hole in the mounting surface concealed by the radar, install only the retainer nearest the interconnection cable socket.

→ ***Note:*** If installing the scanner in a location where the dome radar cannot be placed upside down within the reach of the scanner cable, install the retainers on one side first. After the cable is laid into place swivel the retainers (**B**) over the retention channel and gently tighten the screws.

> ⚠ **Warnings:**
> The retainers only help hold the cable in place. The retainers are not intended to provide strain relief.
> Do not allow the cable to be pulled tight when fitted to the scanner.
> Do not hang the scanner from the cable.

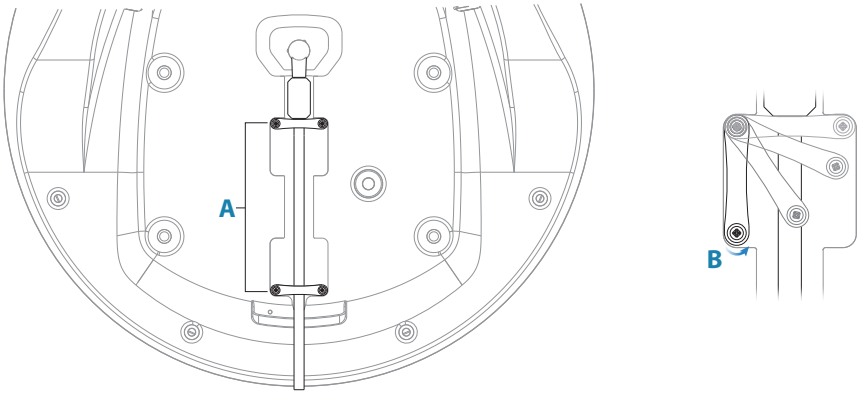

Scanner connection details

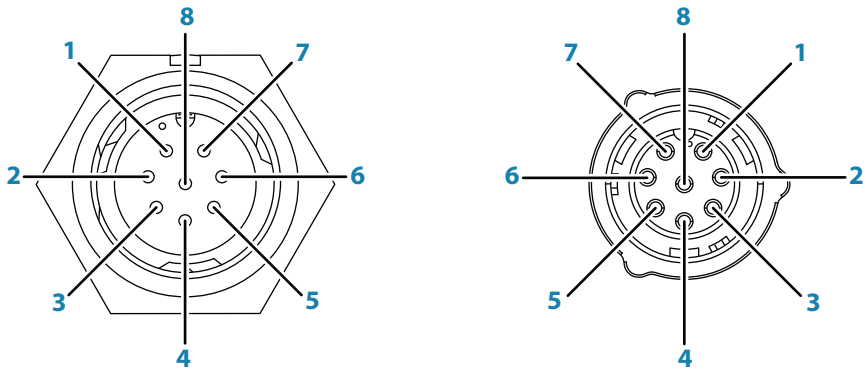

Scanner socket *Interconnection cable plug (scanner end)*

Pin-out	Wire color	Description
1	Black	DC negative
2	Yellow	Power control
3	Green	Data Receive -
4	White / Green	Data Receive +

Draft 23.10.2019

5	Orange	Data Transmit -
6	White / Orange	Data Transmit +
7	Red	+12/24 V DC
8	Drain	Shield

Installing the scanner

Use the supplied mounting template and tape it securely to the chosen location. Before drilling, check that:

- you have oriented the mounting template correctly so that the front of the scanner unit will face the front of the vessel
- clearance to other objects in all directions is >255 mm (10.0") for Halo20/20+ and >315 mm (12.5") for Halo24 from the center of the product as indicated on the mounting templates
- the thickness of chosen mounting surface must be at least 3 mm (0.11") and maximum 18 mm (0.7"). If the location is thicker, longer bolts than those supplied will be required

→ ***Note:*** The bolts supplied are M8 x 30 mm. If you need to use longer bolts make sure they are marine grade stainless steel and allow for minimum of 8 mm (0.3") and maximum of 18 mm (0.7") of thread contact.

1. Use a 9.5 mm (3/8") drill bit to drill the four holes where shown on the mounting template.
2. Connect the scanner interconnection cable. Refer to "Scanner connection" on page 14.
3. If mounting bolts penetrate a roof or a closed dry cavity, use a marine high-grade sealant/ adhesive compound to seal around the bolt holes. Do not fill holes directly with sealant.
4. Position the scanner carefully over the bolt holes so that they are aligned.
5. Place a lock washer and a plain washer onto each bolt.
6. Where necessary, apply a small amount of sealant to the bolt thread length that passes through the mounting surface. Avoid applying sealant to the thread inserted into the radar.
7. Insert bolts into the scanner's threaded mounting holes and tighten securely.

→ ***Note:*** The torque settings for the mounting bolts are 12 Nm – 18 Nm (8.9 lb ft – 13.3 lb ft).

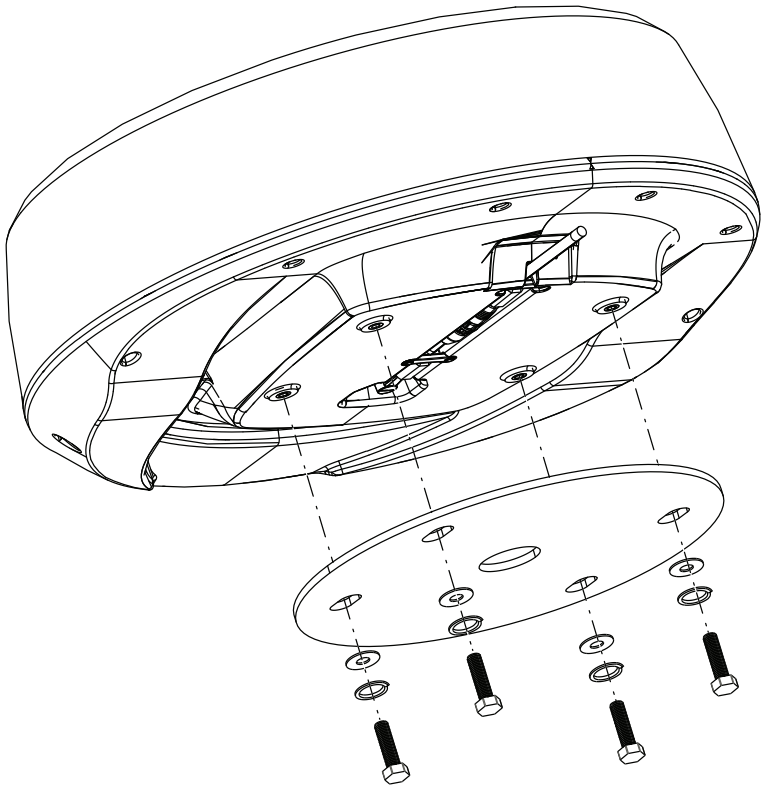

→ ***Note:*** Any extension should be made using appropriate marine grade cable, using tinned copper conductors.

Draft 23.10.2019

Ethernet connection

The scanner can be connected either directly to a RJ45 Ethernet socket or to a 5-pin Ethernet socket via the supplied Ethernet adapter.

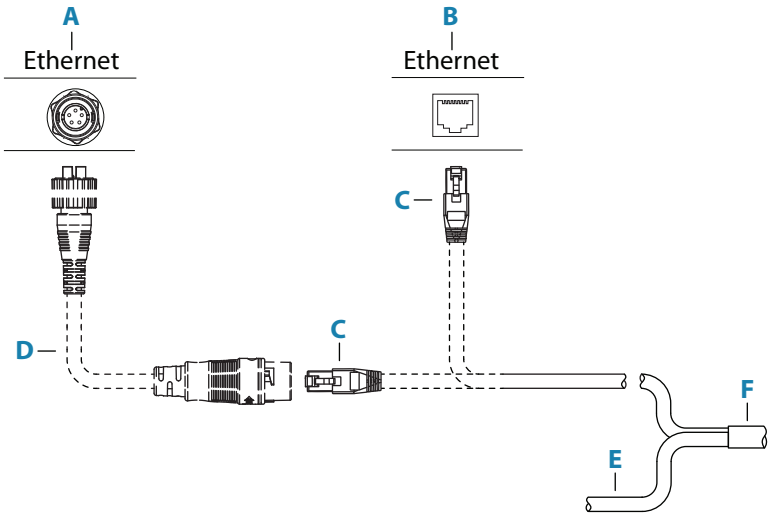

Key	Description
A	Display unit or Ethernet switch with a 5-pin Ethernet socket
B	Display unit or Ethernet switch with a RJ45 Ethernet socket
C	Ethernet cable plug (RJ45)
D	Ethernet adapter cable (RJ45 to 5-pin)
E	Power and power control wires
F	Interconnection cable to scanner

RJ45 Ethernet connector details

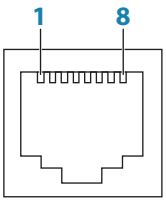

Ethernet switch socket

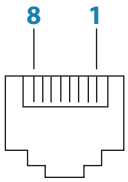

Interconnection cable (RJ45 plug)

Pin-out	Wire color	Description
1	White/Orange	Data transmit +
2	Orange	Data transmit -
3	White/Green	Data receive +
4	Blue	Not used
5	White/Blue	Not used
6	Green	Data receive -
7	White/Brown	Not used
8	Brown	Not used

Draft 23.10.2019

Ethernet adapter cable

The ethernet adapter cable is used to connect the scanner to a 5-pin Ethernet connector. Use the supplied waterproof cable boot to seal the connection between the interconnection cable and the Ethernet adapter cable.

Waterproof cable boot

1. Slide the boot parts over the interconnection cable.

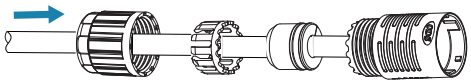

2. Connect the cables together first inserting the RJ45 socket, then turn and lock the cable boot (**A**) to the adapter cable (**B**).

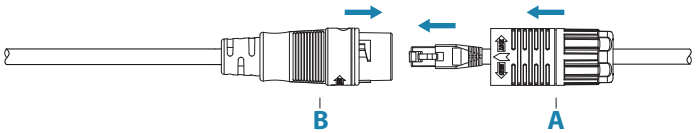

3. Tighten the boot gland.

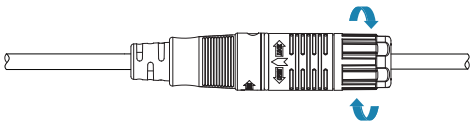

Ethernet adapter cable details

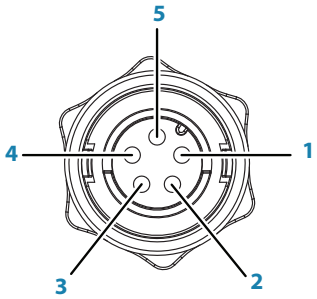

5-pin plug

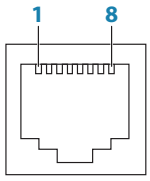

RJ45 socket

5-pin plug	RJ45 socket	Wire color	Description
1	**1**	Orange / White	Data transmit +
2	**2**	Orange	Data transmit -
3	**3**	Blue / White	Data receive +
4	**6**	Blue	Data receive -
5	**Shield**	--	Drain
--	**4-5**	--	Not used
--	**7-8**	--	Not used

Draft 23.10.2019

Power connection

The unit is designed to be powered by a 12 or 24 V DC system. It is protected against reverse polarity, under voltage, and over voltage (for a limited duration of time).

A fuse should be fitted to the positive supply, for recommended fuse rating refer to "Technical specifications" on page 27.

→ ***Note:*** Connection via a switch panel and main isolator switch is assumed. Wiring directly to a vessels battery bank is not recommended.

The shield (bare wire) can be insulated from all other wires.

If interference is encountered from other on board electronics, the screen can be connected to a vessel hull ground to help reduce any interference, but it is not generally required.

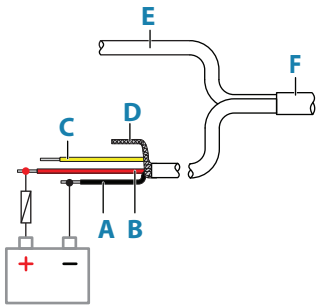

Key	Color	Description
A	Black	DC negative
B	Red	+12/24 V DC
C	Yellow	Power control wire
D	--	Shield
E	--	Data cable
F	--	Interconnection cable to scanner

Recommended wire gauges for extending power wire length for a 12 V system:

		Extension wiring length				
		2 m (6.56 ft)	**5 m (16.40 ft)**	**10 m (32.80 ft)**	**20 m (65.61 ft)**	**30 m (98.42 ft)**
Interconnection cable length						
5 m (16.40 ft)	**Min. AWG**	16	16	16	16	14
10 m (32.80 ft)			16	16	14	12
20 m (65.61 ft)			16	16	14	12
30 m (98.42 ft)			14	12	8	6
5 m (16.40 ft)	**Min. Cross-section (mm^2)**	1.00	1.00	1.00	1.00	2.50
10 m (32.80 ft)			1.00	1.00	2.50	4.00
20 m (65.61 ft)			1.00	1.00	2.50	4.00
30 m (98.42 ft)			2.50	4.00	10.00	16.00

Draft 23.10.2019

Power control connection

The yellow wire in the power cable is used to control how the unit is turned on and off.

Power control by supply power

The scanner will turn on/off when power is applied/removed. Connect the yellow wire to the red wire after the fuse.

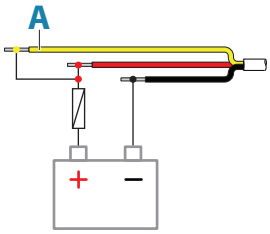

Key	Wire color	Description
A	Yellow	Power control wire, connected to supply power

Power on by switch

The unit will be turned on as long as the switch is closed.

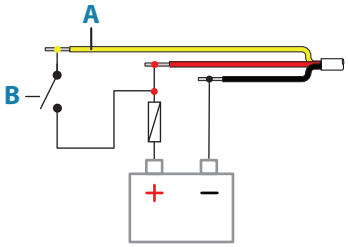

Key	Wire color	Description
A	Yellow	Power control wire
B		Power switch

Power controlled

The scanner can be connected to a common power control bus, and will turn on when power is applied to the bus by a display unit.

For Lowrance displays connect the yellow wire of the power connector cable to the bus.

For Simrad and B&G displays connect the yellow wire of the power connector cable to the bus and set all displays intended to power on/off the system to be master.

For more information, refer to the documentation supplied with your display unit.

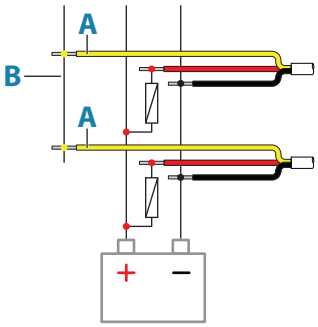

Key	Wire color	Description
A	Yellow	Power control wire
B		Master slave bus

Draft 23.10.2019

3 Setup and configuration

Setup and configuration of the Halo Radar has been simplified compared to traditional pulse radars. There is no zero range adjustment (time delay), no warm up time and no burn in required.

Make the following settings before use. Refer to the documentation supplied with your display unit to locate the settings to be adjusted.

Adjust bearing alignment

Aligns the heading marker on the screen with the center line of the vessel. This ensures that MARPA targets and bearings taken with the EBL are displayed accurately.

Antenna height adjustment

The antenna height is the height of the antenna above the water line. Ensure the antenna height is set correctly, as it affects the sea clutter function. Do not set the height to zero.

Sector blanking

Used to stop the radar transmitting in the direction of structures that could cause unwanted reflections or interference to appear on the radar image. Four sectors can be set, the bearing of which is measured from the bow of the vessel to the center line of the sector.

Sidelobe suppression

→ ***Note:*** This control should only be adjusted by experienced radar users. Target loss in harbor environments may occur if this control is not adjusted correctly.

By default this control is set to Auto. Increase the suppression if there are false targets appearing as arcs radiating from either side of an actual target (typically large structures such as steel ships, container wharves, and large buildings).

Halo light

→ ***Note:*** Only available for Halo20+ and Halo24 Radars.

Determines the light level of the LED accent light.

> ⚠ **Warning:** Halo Radar's lighting may not be approved for use in your boating location. Please check your local boating regulations before turning the blue accent lights ON.

Draft 23.10.2019

4 Maintenance

Clean the radome using soapy water and a soft cloth. Avoid using abrasive cleaning products. Do not use solvents such as gasoline, acetone, M.E.K etc. as this will damage the dome surface.

Draft 23.10.2019

5 Replacing a Broadband 3G/4G Radar

→ ***Note:*** Some older displays may not be compatible with Halo 20, 20+ and 24 dome radars. For information contact Navico customer service.

An adapter cable must be used if the Halo Radar is to be connected using a pre-existing Broadband radar interconnection cable.

Before taking scanner up mast/pedestal:

1. Insert the connector of the adapter cable (**A**) into the scanner socket. Turn the locking collar to secure the connector.
2. Install the first retainer across the adapter cable using the supplied screws. Tighten gently.
3. Install the second retainer using one screw only, leaving it turned to one side so the cable channel is left open.

At mounting location:

4. Insert the connector of the existing interconnection cable (**B**) into the socket on the adapter cable. Turn the locking collar to secure the connector.
5. Swivel the second retainer over cable and gently tighten both screws.

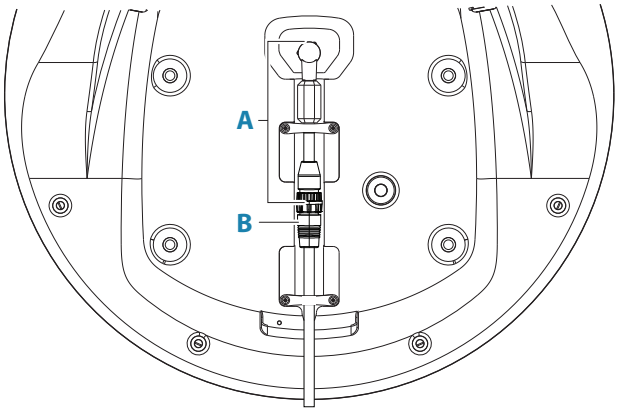

RI-10 Radar interface box and wiring

It is recommended to remove the RI-10 Radar interface box. After removing the RI-10 Radar interface box, reterminate the connector. Use the appropriate tools to strip the 4G cable about 20 cm to allow the waterproof cable boot to slide over the RJ45 connector. Refer to "Waterproof cable boot" on page 17. Connect the 4G cable wires to power as described in "Power connection" on page 18 and "Power control connection" on page 19.

If removing the RI-10 Radar interface box and associated cables/wiring is difficult they may remain in place when a Halo 20/20+ or Halo24 is connected via the scanner adaptor cable, with no detriment to performance.

Check the Fuse/circuit breaker rating is as specified. Refer to "Technical specifications" on page 27.

→ ***Note:*** Halo dome radars do not require navigation data via Simnet or NMEA 2000 for MARPA or Velocity Track to operate.

Draft 23.10.2019

6 Troubleshooting

Status LED

There is a status LED (**A**) at the back of the scanner that indicates the status of the scanner.

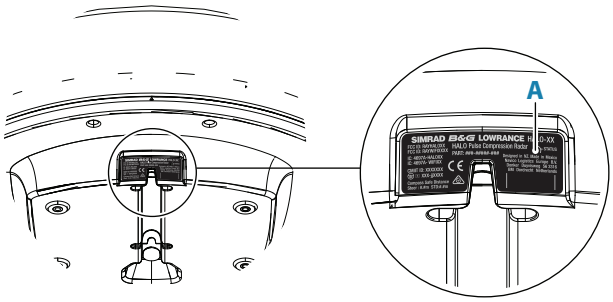

Condition	Flash repeat sequence	Priority
Booting-up/Upgrading	Continuous ON	1 (highest)
Fault	Rapidly flashing	2
Low voltage	3 quick flashes then long gap	3
No Ethernet/Physical link	2 quick flashes then long gap	4
Operating normally	Slow flash	5

→ ***Note:*** If more than one condition exists simultaneously, the condition with the highest priority will be indicated.

Error messages

If problems persists check that the software is up to date. Check the following websites for the latest version of the radar and display unit software:

www.lowrance.com

www.simrad-yachting.com

www.bandg.com

Unknown Radar

Generally seen when overlaying the radar on the chart or when current display software is too old to support radar.

Recommendations

Ensure that the correct radar source is selected and configured in the display unit. Refer to the display unit's documentation.

No radar

Indicates the Display and Radar have not established a network connection.

Recommendations

- Check the Radar Status LED
- Check that the Ethernet light is blinking at the radar and at the display (where applicable) or network expansion port
- Check/select radar in Radar Sources
- Power cycle the system
- Check all connections, ensuring plugs are seated properly and no corrosion is evident on pins
- Check voltage to the yellow power control wire
- Check supply voltage/current
- Check for faults or pinch spots on the Ethernet cable and replace it
- Try another Ethernet port on the display or switch

Draft 23.10.2019

No scanner

Happens when Ethernet connection is established between radar and display, but an internal error in the scanner prevents normal radar operation.

Recommendations

- Check supply voltage/current
- If persistent, power cycle the system, check the scanner cable / RJ45
- Possible internal fault with the radar, contact service

No spoke data

Happens when Ethernet connection is established between radar and display, but an internal error in the scanner prevents normal radar operation.

Recommendations

- Check supply voltage/current
- If persistent, power cycle the system, check the scanner cable / RJ45
- Possible internal fault with the radar, contact service

Error codes

If the error code repeats, please refer to list below.

Error code	Description	Recommendation
0x00000001	Radar saved settings corrupted	Radar will revert to factory defaults. Re-enter your settings including installation settings
0x0001000C	Scanner not detected	1. Check the pedestal interconnection cable connections 2. Power cycle the radar 3. Check input Voltage
0x0001000D	Transmitter overheat (soft)	1. Try changing to shorter ranges <6 NM 2. Switch to STBY, Allow unit cool
0x0001000E	Transmitter overheat (hard)	Switch to STBY, Isolate power to the radar and contact service
0x0001000F	Signal processing error	Unit should revert to STBY. Select transmit If problem persists. power cycle the radar
0x00010017	Scanner failure	Contact service
Power supply		
0x00010010	Power supply overheating	Switch to STBY, Allow unit cool then retry
0x00010011	Power supply voltage error	Check scanner cable for connections for corrosion or damage
0x00010012	Power supply overload	Contact service
0x00010013	Power supply hardware fault	Contact service
0x00010014	Power supply comms fault	Contact service
0x00010019	Low battery voltage (Supply voltage low)	1. Recharge and check supply voltage 2. Restart the radar
0x00010016	LED Lighting fault	Turn accent lighting off then retry
0x00010018	Radar interface box fault	Check the interconnection cable for damage
Mechanical		
0x00010001	Zero bearing sensor fault	Contact service
0x00010002	Bearing sensor fault	Contact service
0x00010015	Mechanical transmission fault	Contact service
0x00010003	Motor drive fault	Contact service
0x0001001A	Motor or antenna has stalled	Contact service

Draft 23.10.2019

7 Dimensional drawings

Halo dome radar dimensions

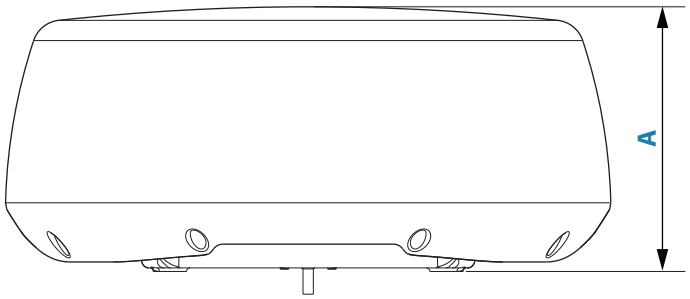

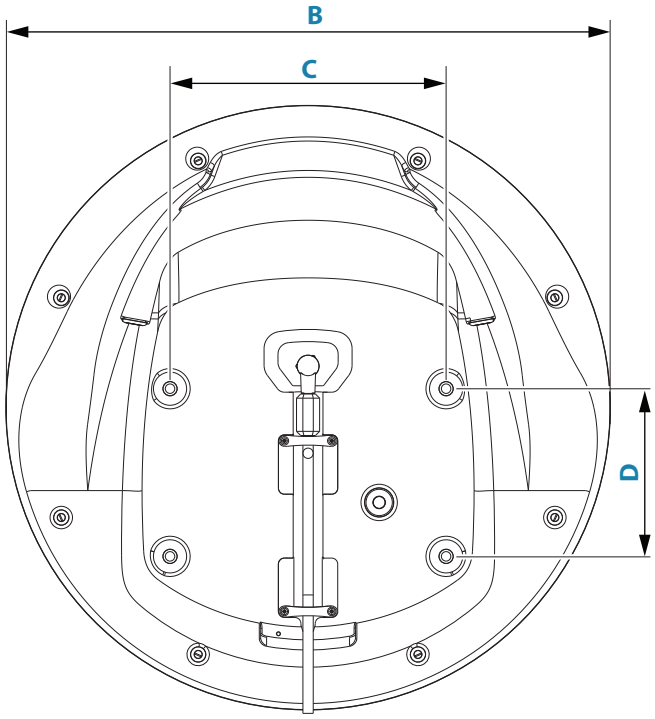

Key	Dimensions		
	Halo20/20+ Radar	Halo24 Radar	Broadband 3G/4G Radar
A	223.0 mm (8.78″)	225 mm (8.9″)	280 mm (11.02″)
B	510.0 mm (20.08″)	610 mm (24″)	488.6 mm (19.24″)
C	233.0 mm (9.17″)	233.0 mm (9.17″)	233.0 mm (9.17″)
D	141.5 mm (5.57″)	141.5 mm (5.57″)	141.5 mm (5.57″)

→ ***Note:*** The bolt holes are located in the same position for each radar.

Draft 23.10.2019

Halo dome radar bottom view

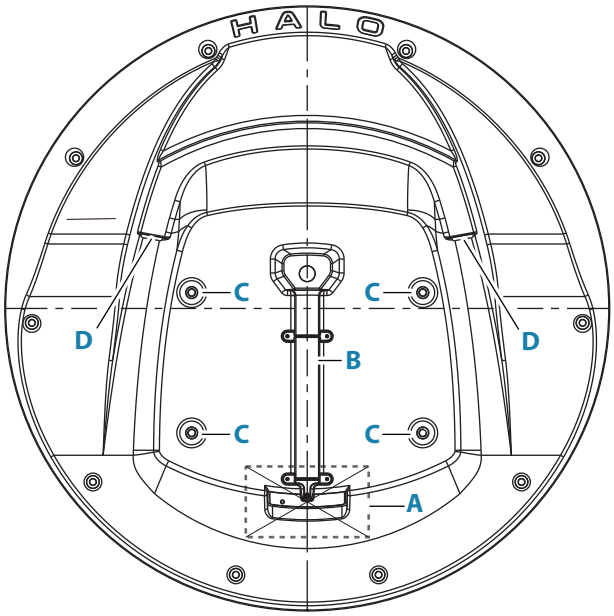

Key	Description
A	Cable entry area
B	Cable retention channel
C	Bolt hole M8 x 30 mm
D	LED accent light*

* Only available for Halo20+ and Halo24 Radars.

Draft 23.10.2019

8 Technical specifications

Halo20/20+ Radar

	Halo20	*Halo20+*
Characteristics		
Environmental	IEC60945 : 2002 Operating Temperature: -25° to +55°C (-13° to +130°F) Relative humidity: +35° C (95° F), 95% RH Waterproof: IPX6	
Max relative wind velocity	51 m/sec (100 Knots)	
Power		
DC input	10.5-31.2 V with reverse polarity protection	
Power consumption	Operating: 17-20 W (Range/mode dependent) Standby: 3.9 W (Typ.) at 13.8 V DC	Operating: 17-29 W (Range/mode dependent) Standby: 3.9 W (Typ.) at 13.8 V DC
Recommended fuse rating	5 A	
Outside dimensions	Refer to "Dimensional drawings" on page 25	
Scanner weight (no cable)	5.9 kg (13.0 lbs)	
Radar and Antenna parameters		
Radar ranges	24 NM	36 NM
Rotation speed (mode dependent)	20 - 24 rpm (mode and MFD dependent)	20 - 60 rpm (mode and MFD dependent)
Transmitter frequency	X-band - 9.4 to 9.5 GHz	
Transmitter source (warm-up time)	No Magnetron – all solid state. Instant On™	
Plane of polarization	Horizontal Polarization	
Transmitter peak power output	10 W	25 W
Minimum range	6 m (19.7 ft)	
Sweep repetition frequency	700-2400 Hz (mode dependent)	
Pulse length	0.04 - 64 usec +/- 10%	
Sweep bandwidth	48 MHz max	
Horizontal beam width (Tx and Rx antenna)	4.9° nominal (-3 dB width)	
Target Separation Control	N/A	OFF: 4.9°+/-10% (-3 dB width nominal) LOW: ~4.3°+/-10% (-3 dB width nominal) MED: ~3.2°+/-10% (-3 dB width nominal) HIGH: ~2.5°+/-10% (-3 dB width nominal)
Vertical beam width (Tx and Rx antenna)	25° (-3 dB width nominal)	
Side lobe level (Tx and Rx antenna)	Below -18 dB (within ±10°); Below -23 dB (outside ±10°)	
Noise figure	Less than 5 dB nominal	
Communications/Cabling		
Protocol	Ethernet 100Base-T	
Max. interconnecting cable length	30 m (98.5 ft) – available as option	

Draft 23.10.2019

Halo24 Radar

Characteristics	
Environmental	IEC60945 : 2002 Operating Temperature: -25° to +55°C (-13° to +130°F) Relative humidity: +35° C (95° F), 95% RH Waterproof: IPX6
Max relative wind velocity	51 m/sec (100 Knots)
Power	
DC input	10.5-31.2 V with reverse polarity protection
Power consumption	Operating: 17-29 W (Range/mode dependent) Standby: 3.9 W (Typ.) at 13.8 V DC
Recommended fuse rating	5 A
Outside dimensions	Refer to "Dimensional drawings" on page 25
Scanner weight (no cable)	6.9 kg (15.22 lbs)
Radar and Antenna parameters	
Radar ranges	100 m (328 ft) to 89 km (48 nm) with 18 range settings (nm/sm/km)
Rotation (mode dependent)	20 - 60 rpm (mode and MFD dependent)
Transmitter frequency	X-band - 9.4 to 9.5 GHz
Transmitter source (warm-up time)	No Magnetron – all solid state. Instant On™
Plane of polarization	Horizontal Polarization
Transmitter peak power output	25 W
Minimum range	6 m (19.7 ft)
Sweep repetition frequency	700-2400 Hz (mode dependent)
Pulse length	0.04 - 64 usec +/- 10%
Sweep bandwidth	48 MHz max
Horizontal beam width (Tx and Rx antenna)	3.9° nominal (-3 dB width)
Target Separation Control	OFF: 3.9°+/-10% (-3 dB width nominal) LOW: ~3.4°+/-10% (-3 dB width nominal) MED: ~2.5°+/-10% (-3 dB width nominal) HIGH: ~2.0°+/-10% (-3 dB width nominal)
Vertical beam width (Tx and Rx antenna)	22° (-3B width nominal)
Side lobe level (Tx and Rx antenna)	Below -18 dB (within ±10°);Below -24 dB (outside ±10°)
Noise figure	Less than 5 dB nominal
Communications/Cabling	
Protocol	Ethernet 100Base-T
Maximum interconnecting cable length	30 m (98.5 ft) – available as option

Draft 23.10.2019

9 Accessories

The most up-to-date accessories list is available at:

- www.lowrance.com
- www.simrad-yachting.com
- www.bandg.com

Draft 23.10.2019

Draft 23.10.2019

988-11230704

LOWRANCE

SIMRAD

B&G

www.lowrance.com
www.simrad-yachting.com
www.bandg.com