LOWRANCE

SIMRAD

B&G

Halo24 Radar

Installation Manual

ENGLISH

www.lowrance.com
www.simrad-yachting.com
www.bandg.com

Preface

Disclaimer

As Navico is continuously improving this product, we retain the right to make changes to the product at any time which may not be reflected in this version of the manual. Please contact your nearest distributor if you require any further assistance.

It is the owner's sole responsibility to install and use the equipment in a manner that will not cause accidents, personal injury or property damage. The user of this product is solely responsible for observing maritime safety practices.

NAVICO HOLDING AS AND ITS SUBSIDIARIES, BRANCHES AND AFFILIATES DISCLAIM ALL LIABILITY FOR ANY USE OF THIS PRODUCT IN A WAY THAT MAY CAUSE ACCIDENTS, DAMAGE OR THAT MAY VIOLATE THE LAW.

This manual represents the product as at the time of printing. Navico Holding AS and its subsidiaries, branches and affiliates reserve the right to make changes to specifications without notice.

Governing language

This statement, any instruction manuals, user guides and other information relating to the product (Documentation) may be translated to, or has been translated from, another language (Translation). In the event of any conflict between any Translation of the Documentation, the English language version of the Documentation will be the official version of the Documentation.

Copyright

Copyright © 2018 Navico Holding AS.

Warranty

The warranty card is supplied as a separate document.

In case of any queries, refer to the brand web site of your display or system:

www.lowrance.com

www.simrad-yachting.com

www.BandG.com

Compliance statement

Europe

This equipment complies with CE under RED Directive 2014/53/EU. The relevant Declaration of conformity is available in the product's section at the following websites:

www.lowrance.com

www.simrad-yachting.com

www.BandG.com

United States of America

Part 15 of the FCC Rules. Operation is subject to the following two conditions: (1) this device may not cause harmful interference, and (2) this device must accept any interference received, including interference that may cause undesired operation.

> ⚠ **Warning:** The user is cautioned that any changes or modifications not expressly approved by the party responsible for compliance could void the user's authority to operate the equipment.

RF emissions notice

This equipment complies with FCC radiation exposure limits set forth for an uncontrolled environment. This device's antenna must be installed in accordance with provided instructions; and it must be operated with minimum 2 m (6.6 ft)* spacing between the

antennas and all person's body (excluding extremities of hands, wrist and feet) during operation. Further, this transmitter must not be co-located or operated in conjunction with any other antenna or transmitter.

* Based on theoretical calculation

→ ***Note:*** This equipment has been tested and found to comply with the limits for a Class B digital device, pursuant to Part 15 of the FCC Rules. This equipment generates, uses and can radiate radio frequency energy and, if not installed and used in accordance with the instructions, may cause harmful interference to radio communications. However, there is no guarantee that the interference will not occur in a particular installation. If this equipment does cause harmful interference to radio or television reception, which can be determined by turning the equipment off and on, the user is encouraged to try to correct the interference by one or more of the following measures:

- Reorient or relocate the receiving antenna
- Increase the separation between the equipment and receiver
- Connect the equipment into an outlet on a circuit different from that of the receiver is connected
- Consult the dealer or an experienced technician for help

Canada

This device complies with Industry Canada's license-exempt RSSs. Operation is subject to the following two conditions:

(1) This device may not cause interference; and

(2) This device must accept any interference, including interference that may cause undesired operation of the device.

Le présent appareil est conforme aux CNR d'Industrie Canada applicables aux appareils radio exempts de licence. L'exploitation est autorisée aux deux conditions suivantes:

(1) l'appareil ne doit pas produire de brouillage, et.

(2) l'utilisateur de l'appareil doit accepter tout brouillage radioélectrique subi, même si le brouillage est susceptible d'en compromettre le fonctionnemen.

Industry Canada Statement

Under Industry Canada regulations, this radio transmitter may only operate using an antenna of a type and maximum (or lesser) gain approved for the transmitter by Industry Canada. To reduce potential radio interference to other users, the antenna type and its gain should be so chosen that the equivalent isotropically radiated power (e.i.r.p.) is not more than that necessary for successful communication.

Conformément à la réglementation d'Industrie Canada, le présent émetteur radio peut fonctionner avec une antenne d'un type et d'un gain maximal (ou inférieur) approuvé pour l'émetteur par Industrie Canada. Dans le but de réduire les risques de brouillage radioélectrique à l'intention des autres utilisateurs, il faut choisir le type d'antenne et son gain de sorte que la puissance isotrope rayonnée quivalente (p.i.r.e.) ne dépassepas l'intensité nécessaire à l'établissement d'une communication satisfaisante.

This radio transmitter (identify the device by certification number, or model number if Category I) has been approved by Industry Canada to operate with the antenna types listed below with the maximum permissible gain and required antenna impedance for each antenna type indicated. Antenna types not included in this list, having a gain greater than the maximum gain indicated for that type, are strictly prohibited for use with this device.

Le présent émetteur radio (identifier le dispositif par son numéro de certification ou son numéro de modèle s'il fait partie du matériel de catégorie I) a été approuvé par Industrie Canada pour fonctionner avec les types d'antenne énumérés ci-dessous et ayant un gain admissible maximal et l'impédance requise pour chaque type d'antenne. Les types d'antenne non inclus dans cette liste, ou dont le gain est supérieur au gain maximal indiqué, sont

strictement interdits pour l'exploitation de l'émetteur.

Halo Antennas	Description	Max. permissible antenna gain (dBi)	Impedance
000-14544-001	Halo24 Radar	23.5 dBi	Not applicable

Radio Frequency (RF) Exposure table

System	100 W/m2 occupational safe distance	10 W /m2 public safe distance
Halo24 Radar	0.6 m (2.0 ft) *	2 m (6.6 ft)*

* Based on theoretical calculation

Trademarks

Navico® is a registered trademark of Navico.

Lowrance® is a registered trademark of Navico Holding AS.

Simrad® is used by license from Kongsberg.

B&G® is a registered trademark of Navico Holding AS.

About this manual

This manual is a reference guide for installing the Halo dome radar.

Important text that requires special attention from the reader is emphasized as follows:

→ ***Note:*** Used to draw the reader's attention to a comment or some important information.

⚠ **Warning:** Used when it is necessary to warn personnel that they should proceed carefully to prevent risk of injury and/or damage to equipment/personnel.

Contents

7 Introduction
7 Parts included

8 Installation
8 Choose the scanner location
9 Considerations for direct roof mounting
12 Mounting the scanner

13 Wiring
13 Wiring guidelines
14 Scanner connection
15 Ethernet connection
16 Power connection
17 Power control connection

19 Setup and configuration

20 Maintenance

21 Replacing a Broadband 3G/4G Radar
21 Dimensions

22 Troubleshooting
22 Error messages
23 Error codes
24 Status LED

25 Drawings
25 Dimensions
25 Bottom view

26 Technical specifications
26 Halo24 Radar

1 Introduction

Parts included

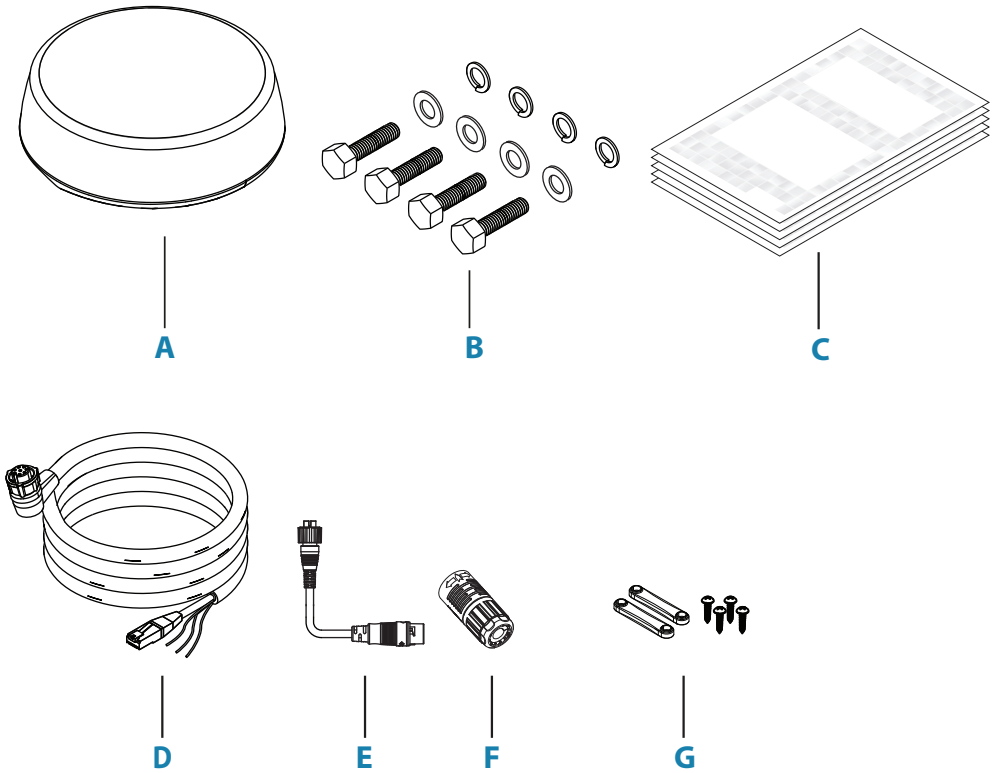

A Halo Radar

B Mounting screws and washers

- Screw (M8x30), 4x
- Flat washer, 4x
- Spring washer, 4x

C Documentation pack

D Interconnection cable

E Ethernet adapter RJ45 to 5-pin, 1.5m (4.9 ft)

F Waterproof cable boot for the Ethernet adapter

G Cable retainer kit

- Cable retainer clip, 2x
- Screw (M2.5x8), 4x

2 Installation

→ ***Note:*** The Halo Radar is factory sealed. Removing the cover will void the factory warranty.

Choose the scanner location

The radar's ability to detect targets greatly depends on the position of its scanner. The ideal location for the scanner is high above the vessel's keel line where there are no obstacles.

A higher installation position increases the radar ranging distance, but it also increases the minimum range around the vessel where targets cannot be detected. Higher installation height also reduces the ability of the radar to detect targets in sea clutter.

When you are deciding on the location, consider the following

The length of the interconnection cable supplied with your radar is usually sufficient. If you think you'll need a longer cable, consult your dealer before installation. Optional cable lengths are 5 m (16 ft) 10 m (33 ft), 20 m (65.5 ft) and 30 m (98 ft).

If you mount the scanner on a pedestal or base, ensure that rain and sea spray can drain away rapidly, and the breather hole (**A**) in the base can operate.

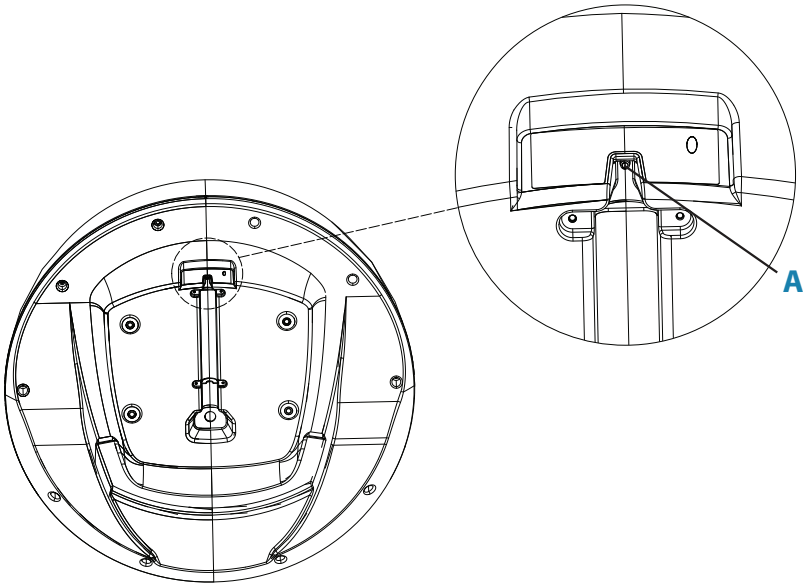

The scanner is usually installed parallel to the line of the keel.

Do not install the scanner:

- too high up (eg at the top of a mast), which may cause degradation of the radar picture over short ranges
- close to lamps or exhaust outlets. The heat emissions may damage the dome. Soot and smoke will degrade the performance of the radar
- close to the antennas of other equipment such as direction finders, VHF antennas, GPS equipment, as it may cause or be subject to interference
- where a large obstruction (such as an exhaust stack) is at the same level as the beam, the obstruction is likely to generate false echoes and/or shadow zones
- where it will be subjected to strong vibrations. Vibrations could degrade the performance or service life of the radar
- directly on to a large flat roof area. Use a pedestal to elevate the scanner for radar beams to clear roof line. Refer to "Considerations for direct roof mounting" on page 9

⚠ **Warning:** For dual radar installations, ensure Halo Radar is not installed in the beam of a pulse radar at any time.

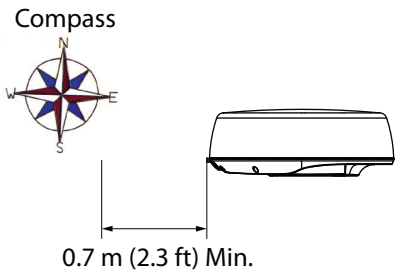	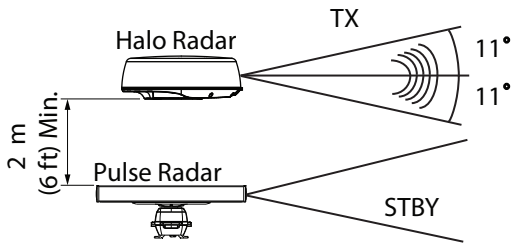
Minimum distance to install near the ships compass is 0.7 m (2.3 ft).	Do not install the Halo Radar on the same beam plane as a conventional pulse radar. A pulse radar must be set to STBY or OFF any time the Halo Radar is being operated.
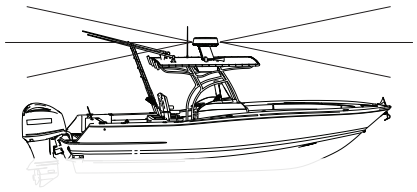	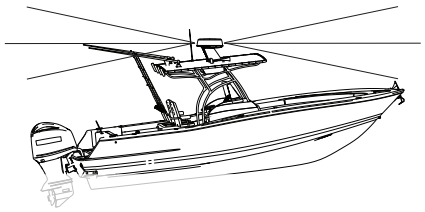
If possible, ensure that the location site provides the scanner with a clear view all round the vessel.	If installed on power boats that have a steep planing angle, it is recommended to tilt the scanner angle down at the front. (Beam angle is 11° either side of center).

Considerations for direct roof mounting

When deciding a suitable mounting location for the Halo Radar, be aware that the vertical radar beam extends to 22° either side of horizontal, with 50% of the power projecting in a beam 11° off horizontal. If the radar beams cannot clear the roof line, this will decrease performance of the radar. Depending on the size of the hard top of the vessel, it is recommended to elevate the antenna to allow the radar beams to clear the roof line.

→ ***Note:*** Where the mounting surface is constructed of any form of metal you must elevate the radar so that the beam has complete clearance, else performance will be severely impaired.

Determine scanner height

This is a guide to determine scanner height in relation to the furthest forward corner of the hard top.

Measure the distance (**A**) from the Halo Radar to the furthest forward corner of the hard top.

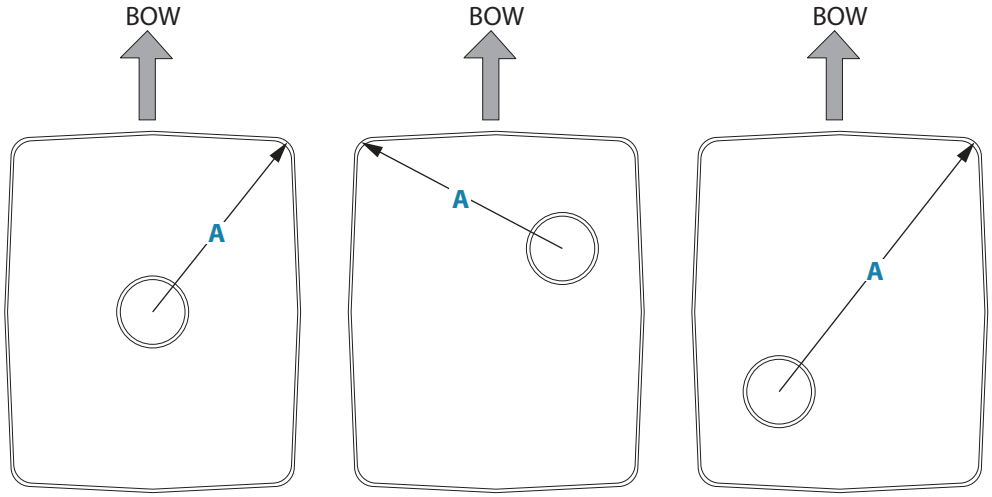

Use the illustrations below to determine the height of the scanner in relation to distance (**A**).

Possible performance loss

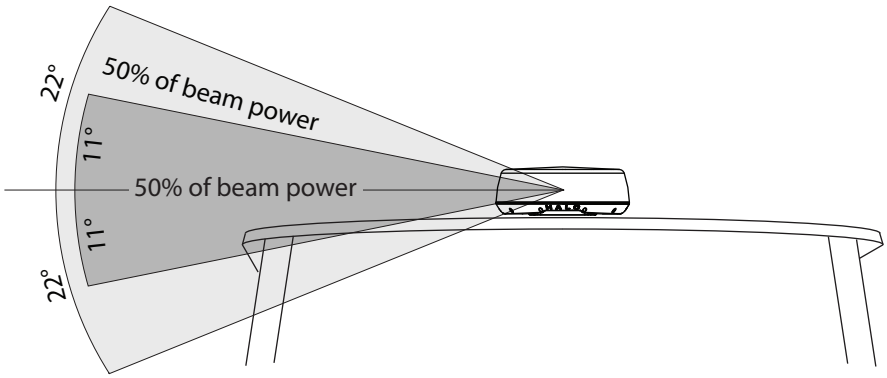

Above illustrates an installation with the Halo Radar mounted directly on to a large hard top. This installation could suffer decreased performance as the radar energy is either reflected or absorbed by the hard top.

→ ***Note:*** Where the mounting surface is constructed of any form of metal you must elevate the dome so that the beam has complete clearance, else performance will be severely impaired.

Good performance

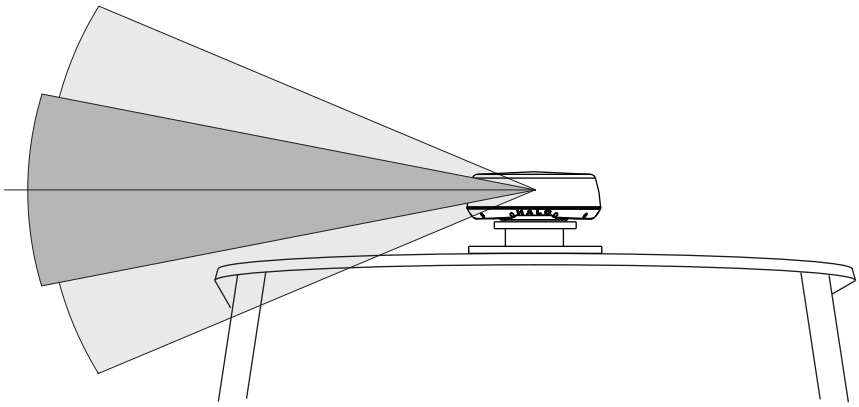

Above illustrates that raising the radar scanner off the hard top allows most of the radar energy to clear the hard top.

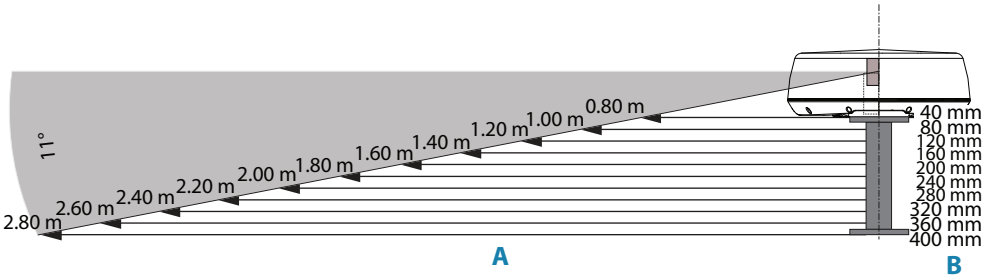

For every increase of 200 mm (7.87") of dimension (**A**), increase the height (**B**) by 40 mm (1.6").

Optimum performance

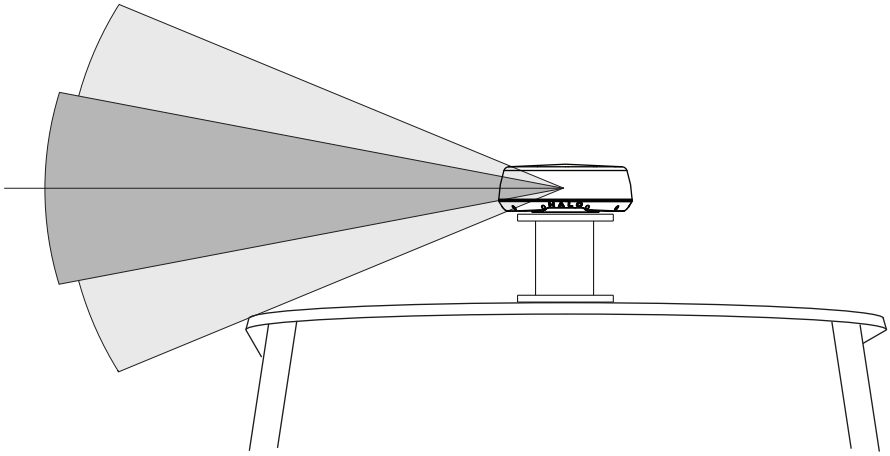

For best performance, the radar should be positioned to allow the beams to clear the superstructure of the boat.

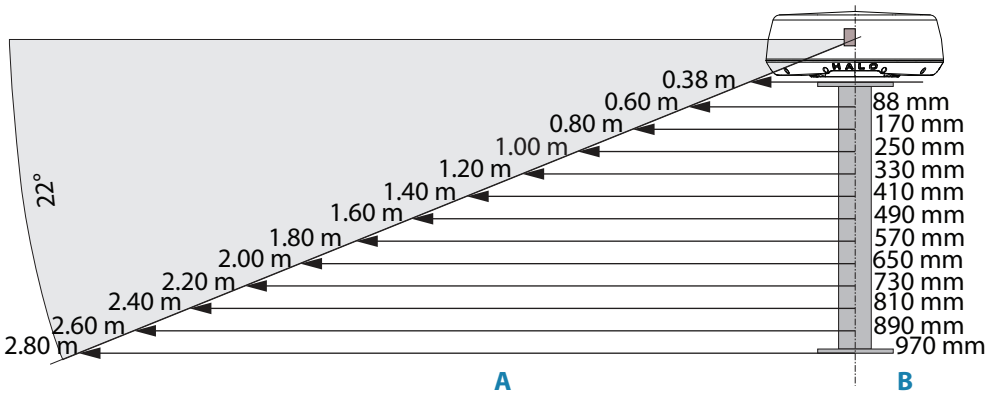

For every increase of 200 mm (7.87") of dimension (**A**), increase the height (**B**) by 80 mm (1.6").

Halo light

The Halo Radar has a blue accent light that can be activated from the display unit. Refer to "Setup and configuration" on page 19.

> ⚠ **Warning:** Halo Radar's lighting may not be approved for use in your boating location. Please check your local boating regulations before turning the blue accent lights ON.

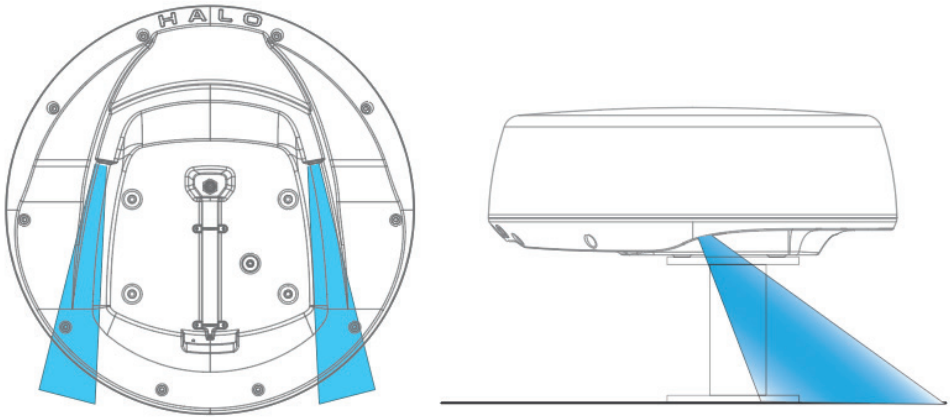

Mounting the scanner

→ ***Note:*** If replacing an already installed Broadband 3G/4G Radar, refer to "Replacing a Broadband 3G/4G Radar" on page 21.

Use the supplied mounting template and tape it securely to the chosen location. Before drilling, check that:

- you have oriented the mounting template correctly so that the front of the scanner unit will face the front of the vessel
- clearance to other objects in all directions is >315 mm (12.5") from the center of the product as indicated on the mounting template
- the thickness of chosen mounting surface is not more than 18 mm (0.7"). If the location is thicker, longer bolts than those supplied will be required

→ ***Note:*** The bolts supplied are M8 x 30 mm. If you need to use longer bolts make sure they are marine grade stainless steel and allow for minimum of 8 mm (0.3") and maximum of 18 mm (0.7") of thread contact.

1. Use a 9.5 mm (3/8") drill bit to drill the four holes where shown on the mounting template
2. Connect the scanner interconnection cable
3. Route the connection cable through the cable retention channel. Refer to "Scanner connection details" on page 15
4. Position the scanner carefully over the bolt holes so that they are aligned
5. Place a lock washer and a plain washer onto each bolt
6. Insert bolt into drill hole and locate into scanners threaded mounting holes and tighten securely

→ ***Note:*** The torque settings for the mounting bolts are 12 Nm – 18 Nm (8.9 lb ft – 13.3 lb ft)

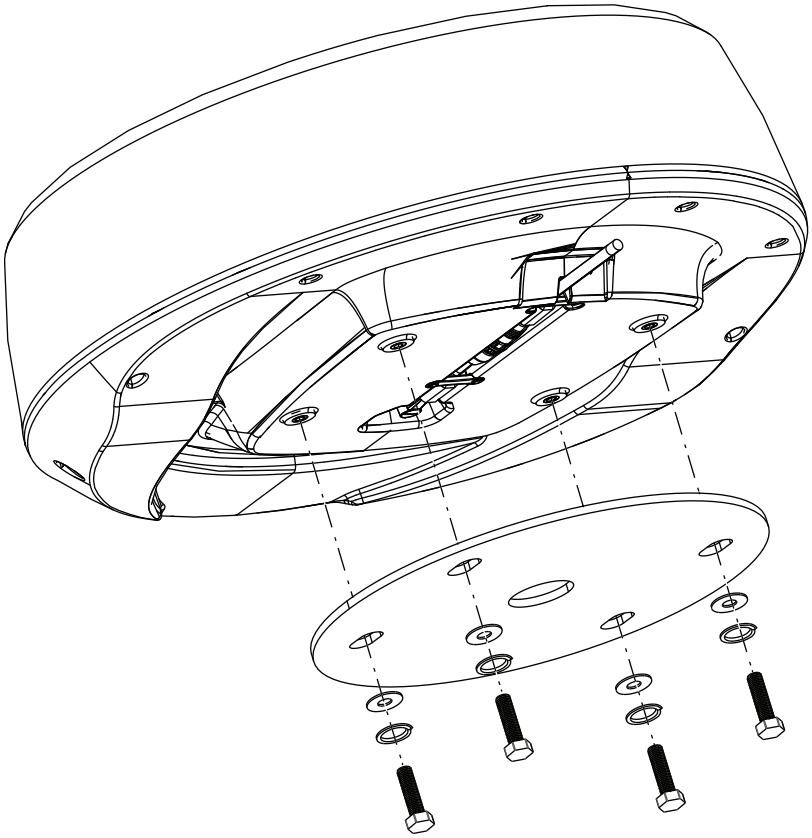

3 Wiring

Run the interconnection cable between the scanner and the display unit or Ethernet switch.

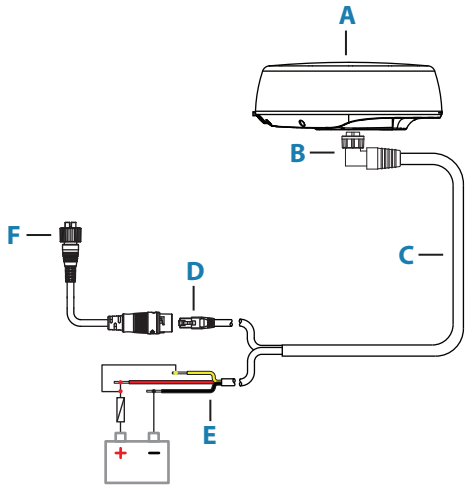

A Halo Radar
B Scanner connector
C Interconnection cable
D Ethernet connector
E Power wires
F Ethernet adapter RJ45 to 5-pin (optional)

Wiring guidelines

Do not:

- make sharp bends in the cables
- run cables in a way that allows water to flow down into the connectors
- run the data cables adjacent to radar, transmitter, or large/high current carrying cables or high frequency signal cables
- run cables so they interfere with mechanical systems
- run cables over sharp edges or burrs
- attach a mouse line to the Ethernet cable or connector directly as this will loosen and damage the connector and the radar will malfunction when power is applied
- bend the Ethernet cable back on itself as this will cause damage to the Ethernet cable and the radar will malfunction when power is applied

Do:

- connect a mouse line to the outer jacket of the cable so that the strain of pulling is transferred to the stronger outer jacket of the cable. Use some small cable ties to secure the mouse line to the outer jacket as well if there is sufficient clearance
- tape the RJ45 connector to the mouse line so that it does not get caught and bent backwards
- cover the RJ45 and the conductors with tape to protect them as they are pulled thorough the run
- make drip and service loops
- use cable-tie on all cables to keep them secure
- solder/crimp and insulate all wiring connections if extending or shortening the cables
- keep joins as high as possible to minimize possibility of water immersion
- leave room adjacent to connectors to ease plugging and unplugging of cables

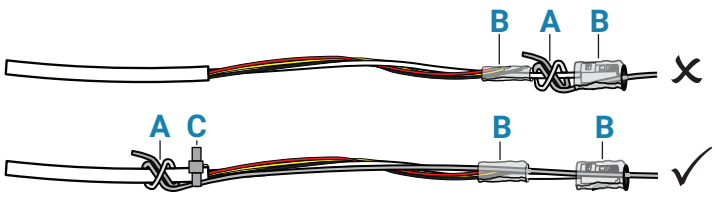

A Mouse line

B Electrical tape

C Cable tie

> ⚠ **Warning:** Before starting the installation, be sure to turn electrical power off. If power is left on or turned on during the installation, fire, electrical shock, or other serious injury may occur. Be sure that the voltage of the power supply is compatible with the unit.

> ⚠ **Warning:** The positive supply wire (red) should always be connected to (+) DC with the supplied fuse or a circuit breaker (closest available to fuse rating).

Scanner connection

→ ***Note:*** If replacing an already installed Broadband 3G/4G Radar, refer to "Replacing a Broadband 3G/4G Radar" on page 21

The scanner interconnection cable connects to the scanner using an 8 pin connector

1. Insert cable connector on to the male 8 pin plug on the scanner. Take care to align the connector correctly to avoid bending the pins
2. Secure the locking collar by rotating clockwise until it clicks
3. Feed and secure the cable into the cable retention channel
4. Install the 2 cable retainers (**A**), the screws should be gently tightened

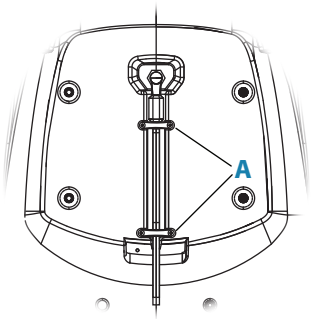

Scanner connection details

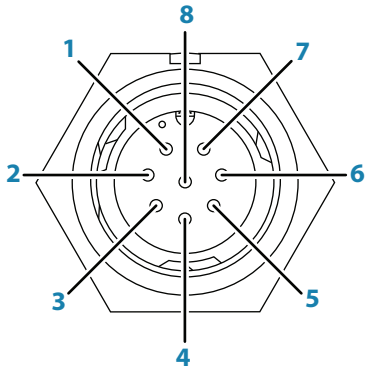

Scanner socket

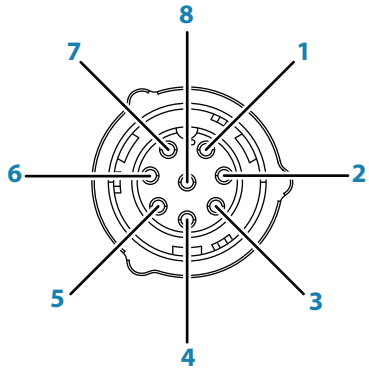

Interconnection cable (scanner end)

Pin-out	Wire color	Description
1	Black	DC negative
2	Yellow	Power control
3	Green	Data Receive -
4	White / Green	Data Receive +
5	Orange	Data Transmit -
6	White / Orange	Data Transmit +
7	Red	+12/24 V DC
8	Drain	Shield

Ethernet connection

The scanner can be connected either directly to a RJ45 Ethernet connector or to a 5-pin Ethernet connector via the supplied Ethernet adapter.

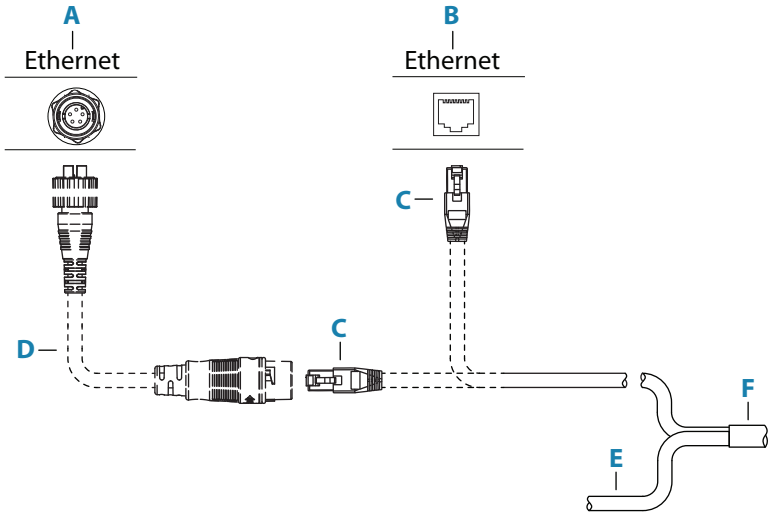

Key	Description
A	Display unit or Ethernet switch with a 5-pin Ethernet socket
B	Display unit or Ethernet switch with a RJ45 Ethernet socket
C	Ethernet cable plug (RJ45)
D	Ethernet adapter cable (RJ45 to 5-pin)
E	Power and power control wires
F	Interconnection cable to scanner

RJ45 Ethernet connector details

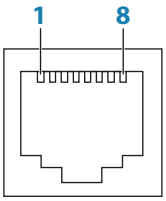

Ethernet switch socket

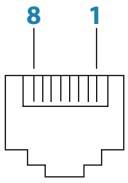

Interconnection cable (RJ45 plug)

Pin-out	Wire color	Description
1	White/Orange	Data transmit +
2	Orange	Data transmit -
3	White/Green	Data receive +
4	Blue	Not used
5	White/Blue	Not used
6	Green	Data receive -
7	White/Brown	Not used
8	Brown	Not used

Ethernet adapter cable

The ethernet adapter cable can be used to connect the scanner to a 5-pin Ethernet connector. Use the supplied waterproof cable boot to seal the connection between the interconnection cable and the Ethernet adapter cable.

Waterproof cable boot

1. Slide the boot part over the cable

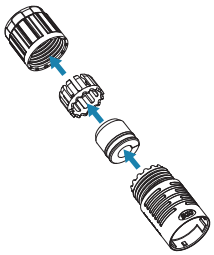

2. Connect the cables together and lock the cable boot to the adapter cable

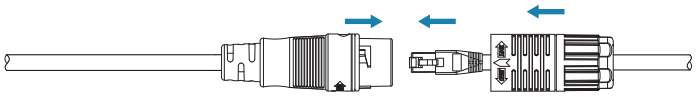

3. Tighten the boot gland

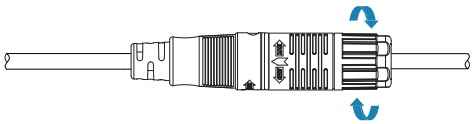

Ethernet adapter cable details

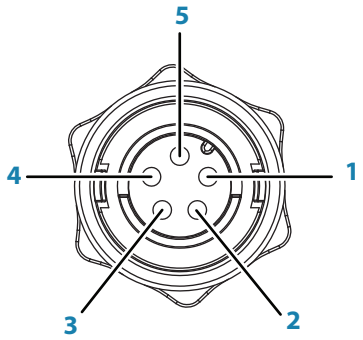

5-pin plug

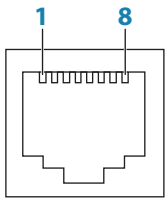

RJ45 socket

5-pin plug	RJ45 socket	Wire color	Description
1	**1**	Orange / White	Data transmit +
2	**2**	Orange	Data transmit -
3	**3**	Blue / White	Data receive +
4	**6**	Blue	Data receive -
5	**Shield**	--	Drain
--	**4-5**	--	Not used
--	**7-8**	--	Not used

Power connection

The unit is designed to be powered by a 12 or 24 V DC system.

It is protected against reverse polarity, under voltage, and over voltage (for a limited duration of time).

A fuse should be fitted to the positive supply, for recommended fuse rating refer to "Technical specifications" on page 26.

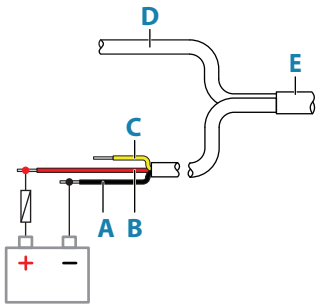

Key	Color	Description
A	Black	DC negative
B	Red	+12/24 V DC
C	Yellow	Power control wire
D	--	Data cable
E	--	Interconnection cable to scanner

Power control connection

The yellow wire in the power cable must be used to control how the unit is turned on and off.

Power control by supply power

The scanner will turn on/off when power is applied/removed. Connect the yellow wire to the red wire after the fuse.

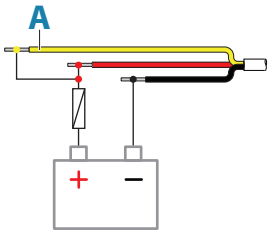

Key	Wire color	Description
A	Yellow	Power control wire, connected to supply power

Power on by switch

The unit will be turned on as long as the switch is closed.

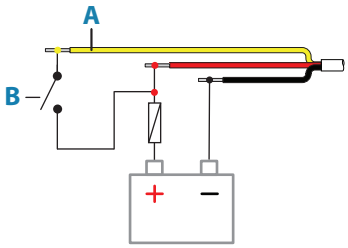

Key	Wire color	Description
A	Yellow	Power control wire
B		Power switch

Power controlled

The scanner can be connected to a common power control bus, and will turn on when power is applied to the bus by a display unit.

For Lowrance displays connect the yellow wire of the power connector cable to the bus.

For Simrad and B&G displays connect the yellow wire of the power connector cable to the bus and set all displays intended to power on/off the system to be master.

For more information, refer to the documentation supplied with your display unit.

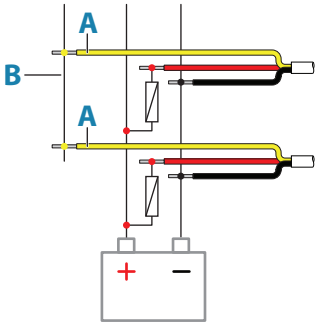

Key	Wire color	Description
A	Yellow	Power control wire
B		Master slave bus

4

Setup and configuration

Setup and configuration of the Halo Radar has been simplified compared to traditional pulse radars. There is no zero range adjustment (time delay), no warm up time and no burn in required.

Make the following settings before use. Refer to the documentation supplied with your display unit.

Adjust bearing alignment

Aligns the heading marker on the screen with the center line of the vessel. This ensures that MARPA targets and bearings taken with the EBL are displayed accurately.

Antenna height adjustment

The antenna height is the height of the antenna above the water line. Set the antenna height correctly, this affects the sea clutter function. Do not set the height to zero.

Sector Blanking

Used to stop the radar transmitting in the direction of structures that could cause unwanted reflections or interference to appear on the radar image. Four sectors can be set, the bearing of which is measured from the bow of the vessel to the center line of the sector.

Side lobe suppression

→ ***Note:*** This control should only be adjusted by experienced radar users. Target loss in harbor environments may occur if this control is not adjusted correctly.

By default this control is set to Auto. Increase the suppression if there is significant metallic clutter around the radar.

Halo light

Determines the light level of the LED accent light.

> ⚠ **Warning:** Halo Radar's lighting may not be approved for use in your boating location. Please check your local boating regulations before turning the blue accent lights ON.

5 Maintenance

Clean the radome using soapy water and a soft cloth. Avoid using abrasive cleaning products.

Do not use solvents such as gasoline, acetone, M.E.K etc. as this will damage the dome surface.

6 Replacing a Broadband 3G/4G Radar

An adapter cable must be used if the Halo Radar is connected through an already installed Broadband 3G/4G Radar interconnection cable.

A Broadband 3G/4G Radar to Halo24 Radar adapter cable (00014551-001)

B Existing installed Broadband 3G/4G Radar interconnection cable

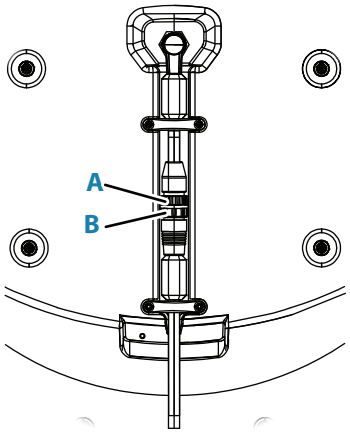

Dimensions

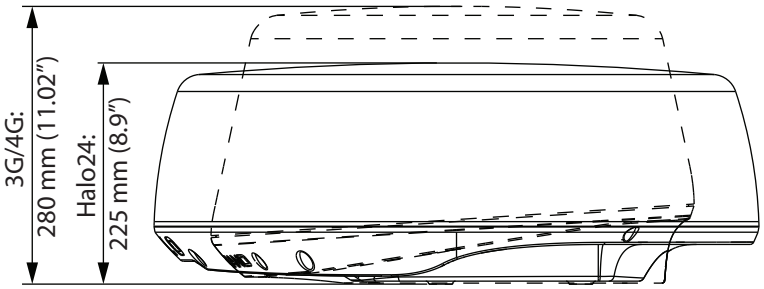

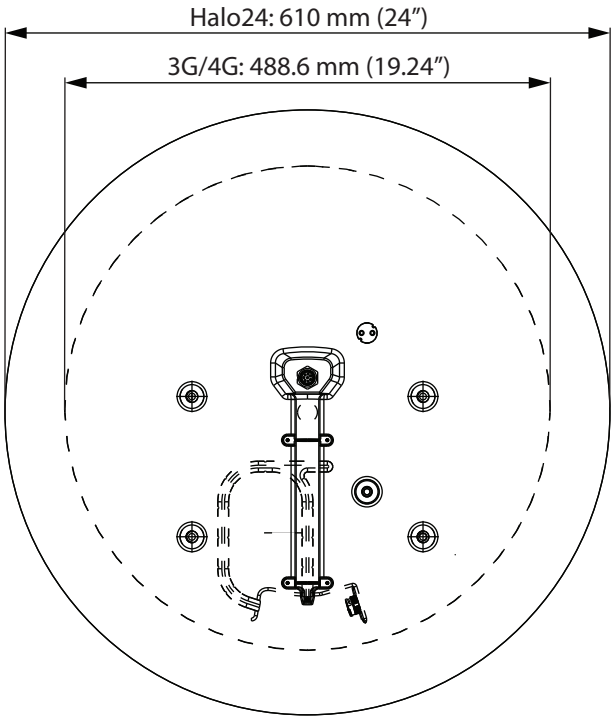

7 Troubleshooting

Error messages

If any of the following messages appear, power off/on the radar unit.

If problems persists check that the software is up to date. Check the following websites for the latest version of the radar and display unit software:

www.lowrance.com

www.simrad-yachting.com

www.BandG.com

Unknown Radar

Generally seen when overlaying the radar on the chart.

Recommendations

Ensure that the correct radar source is selected and configured in the display unit. Refer to the display unit's documentation.

No radar

Indicates the display does not see the radar.

Recommendations

- Check/select radar in Radar Sources
- Power cycle the system
- Check all connections
- Check voltage to the yellow power control wire
- Insufficient power supply
- Missing or intermittent Ethernet connection, check for damage of the RJ45 connector
- Faulty Ethernet cable
- Try another Ethernet port on the display or switch

No scanner

Sometimes seen before the "No Radar" message above:

Recommendations

- Check voltage/current
- If persistent, power cycle the system, check the scanner cable / RJ45
- Possible internal fault with the radar, contact service

No spoke data

Sometimes seen before the "No Scanner" message above:

Recommendations

- Check voltage/current
- If persistent, power cycle the system, check the scanner cable / RJ45
- Possible internal fault with the radar, contact service

Error codes

If any of the error codes below are encountered, power cycle the radar. If the error code repeats, please refer to list below.

Error code	Description	Recommendation
0x00000001	Radar saved settings corrupted	Radar will revert to factory defaults. Re-enter your settings including installation settings
0x0001000C	Scanner not detected	1. Check the pedestal interconnection cable connections 2. Power cycle the radar 3. Check input Voltage
0x0001000D	Transmitter overheat (soft)	1. Try changing to shorter ranges <6 NM 2. Switch to STBY, Allow unit cool
0x0001000E	Transmitter overheat (hard)	Switch to STBY, Isolate power to the radar and contact service
0x0001000F	Signal processing error	Unit should revert to STBY. Select transmit If problem persists. power cycle the radar
0x00010017	Scanner failure	Contact service
Power supply		
0x00010010	Power supply overheating	Switch to STBY, Allow unit cool then retry
0x00010011	Power supply voltage error	Check scanner cable for connections for corrosion or damage
0x00010012	Power supply overload	Contact service
0x00010013	Power supply hardware fault	Contact service
0x00010014	Power supply comms fault	Contact service
0x00010019	Low battery voltage (Supply voltage low)	1. Recharge and check supply voltage 2. Restart the radar
0x00010016	LED Lighting fault	Turn accent lighting off then retry
0x00010018	Radar interface box fault	Check the interconnection cable for damage
Mechanical		
0x00010001	Zero bearing sensor fault	Contact service
0x00010002	Bearing sensor fault	Contact service
0x00010015	Mechanical transmission fault	Contact service
0x00010003	Motor drive fault	Contact service
0x0001001A	Motor or antenna has stalled	Contact service

Status LED

There is a status LED (**A**) at the back of the scanner that indicates the status of the scanner.

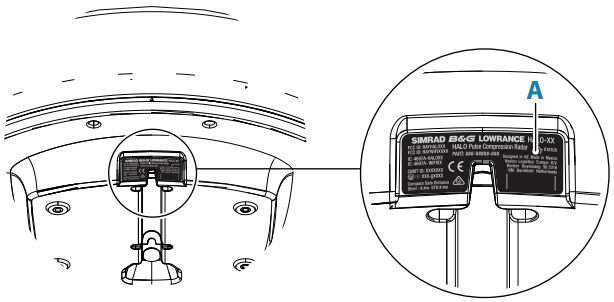

Condition	Flash repeat sequence	Priority
Booting-up/Upgrading	Continuous ON	1 (highest)
Fault	Rapidly flashing	2
Low voltage	3 quick flashes then long gap	3
No Ethernet/Physical link	2 quick flashes then long gap	4
Operating normally	Slow flash	5

→ ***Note:*** If more than one condition exists simultaneously, the condition with the highest priority will be indicated.

8 Drawings

Dimensions

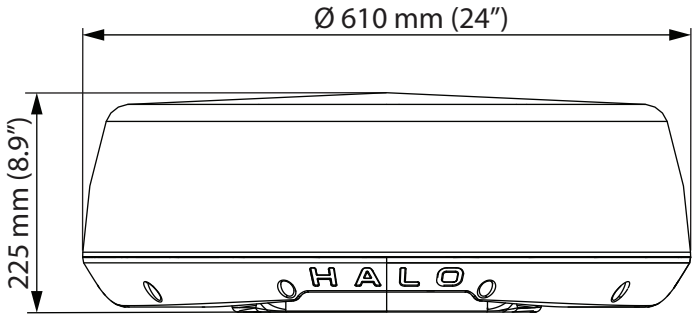

Bottom view

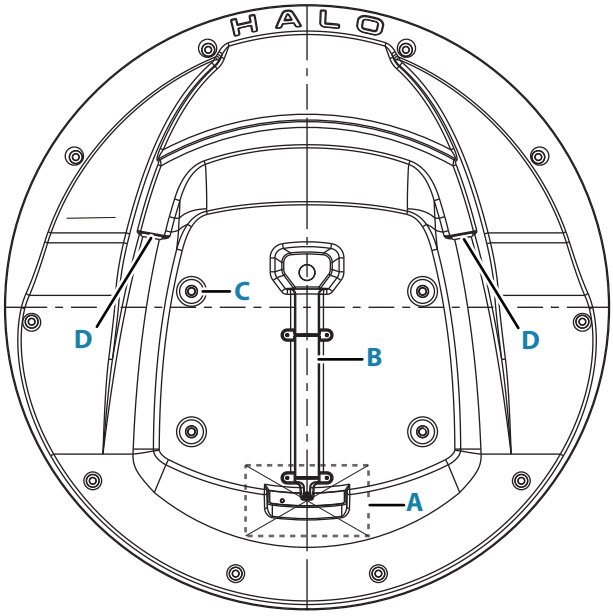

Key	Description
A	Cable entry area
B	Cable retention channel
C	4 Bolt holes M8 x 30 mm
D	LED accent light

9 Technical specifications

Halo24 Radar

Characteristic	
Environmental	IEC60945 : 2002 Operating Temperature: -25° to +55°C (-13° to +130°F) Relative humidity: +35° C (95° F), 95% RH Waterproof: IPX6
Max relative wind velocity	51 m/sec (100 Knots)
Power	
DC input	10.5-31.2 V with reverse polarity protection
Power consumption	Operating: 25W at 13.8VDC ~1.84A Standby: 3.9 W (Typ.) at 13.8 V DC
Recommended fuse rating	5 A
Transmitter source (pre-heating time)	No magnetron – Instant On
Outside dimensions	Refer to "Drawings" on page 25
Scanner weight (no cable)	6.9 kg (15.22 lbs)
Radar and Antenna parameters	
Radar ranges	100 m (328 ft) to 89 km (48 nm) with 18 range settings (nm/sm/km)
Rotation (mode dependent)	20 - 60 rpm (mode and MFD dependent)
Transmitter frequency	X-Band - USA (FCC) 9300-9500 Mhz X-Band - Canada (ISED) 9225-9500 Mhz
Transmitter source (warm-up time)	No Magnetron – all solid state. Instant On™
Plane of polarization	Horizontal Polarization
Transmitter peak power output	25 W
Minimum range	6 m (19.7 ft)
Sweep repetition frequency	700-2400 Hz (mode dependent)
Pulse length	0.04 - 64 usec +/- 10%
Sweep bandwidth	48 MHz max
Horizontal beam width (Tx and Rx antenna)	3.9° nominal (-3 dB width)
Target Separation Control	OFF: 3.9°+/-10% (-3 dB width nominal) LOW: ~3.4°+/-10% (-3 dB width nominal) MED: ~2.5°+/-10% (-3 dB width nominal) HIGH: ~2.0°+/-10% (-3 dB width nominal)
Vertical beam width (Tx and Rx antenna)	22° (-3B width nominal)
Side lobe level (Tx and Rx antenna)	Below -18 dB (within ±10°);Below -24 dB (outside ±10°)
Noise figure	Less than 5 dB nominal
Communications/Cabling	
Protocol	Ethernet 100 Base T
Maximum interconnecting cable length	30 m (98.5 ft) – available as option

988-12307-001

LOWRANCE

SIMRAD

B&G

www.lowrance.com
www.simrad-yachting.com
www.bandg.com