If you ever need to replace or refit the 8-pin RJ45 connector on the interconnection cable, use a RJ45 crimping tool and wire as follows:

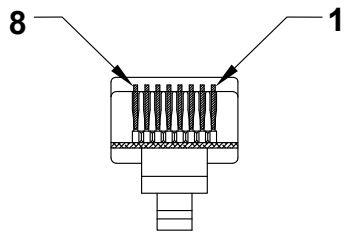

Pin	Wire color
1	White/orange
2	Orange
3	White/green
4	Blue
5	White/blue
6	Green
7	White/brown
8	Brown

If you need to test the 14-pin connector on the interconnection cable, it is wired as follows:

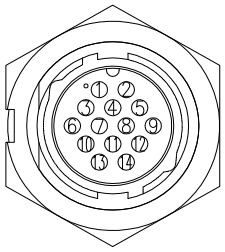
Pins on pedestal

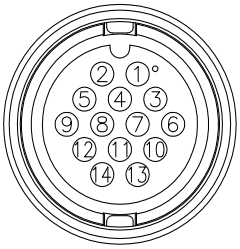
Pins on cable

Pin	Wire color	
1	Black	Pedestal power DC (-)
2	Red	Pedestal power DC (+)
3	Yellow	Park angle retention
4	Drain	Tinned wire
5	Orange	Pedestal power DC (+)
6	Blue	RJ45 pin 4
7	White/blue	RJ45 pin 5
8	White/brown	RJ45 pin 7
9	Brown	RJ45 pin 8
10	White/green	RJ45 pin 3
11	Blue	Pedestal power DC (-)
12	White/orange	RJ45 pin 1
13	Green	RJ45 pin 6
14	Orange	RJ45 pin 2

Connect the power cable

The power supply for the radar is connected to the RI-50 interface module. The radar needs a 12 or 24 V DC supply capable of delivering 20 A for 12 V system and 10 A for 24 V system.

The RI-50 is protected against reverse polarity, overvoltage and undervoltage. The RI-50 must be connected via a dedicated fuse/circuit breaker rated at 25 A for 12 V DC systems or 15 A for 24 V DC systems. The fuse/circuit breaker should be labeled accordingly.

The further away the power supply, the thicker the cable you need.

Voltage	Cable length				
	0-2 m (0-6.6 ft)	**2-3 m (6.6-9.8 ft)**	**3-5 m (9.8-16.4 ft)**	**5-7.5 m (16.4-24.6 ft)**	**7.5-12 m (24.6-39.4 ft)**
12 V DC	4 mm^2 (12-AWG)	6 mm^2 (10-AWG)	10 mm^2 (8-AWG)	16 mm^2 (6-AWG)	25 mm^2 (4-AWG)
24 V DC	1.5 mm^2 (16-AWG)	1.5 mm^2 (16-AWG)	2.5 mm^2 (14-AWG)	4 mm^2 (12-AWG)	6 mm^2 (10-AWG)

→ *Notes:*

- *Above values in mm^2 = area of copper conductor. Stranded core cables are recommended.*
- *Conductor sizes greater than 10 mm^2 (8-AWG) require a short length of thinner cable (6 mm^2 10-AWG) to connect into the RI-50 screw terminals.*

1 Strip away approximately 10 mm (0.4”) of insulation at the end of each wire.
2 Unscrew the terminal screw from the positive input **SUPPLY** connector (identified by the + sign) on the RI-50 circuit board.
3 Insert the bare end of the positive wire into the positive input connector to make a connection.
4 Tighten the terminal screw to hold the positive wire in place. Gently pull the positive wire to ensure it is secured.
5 Repeat this process to connect the negative wire to the negative input **SUPPLY** connector (identified by the – sign).
6 If you have a 24V battery system you want to protect from over discharge, change the **12/24V** switch to **24V ONLY**.

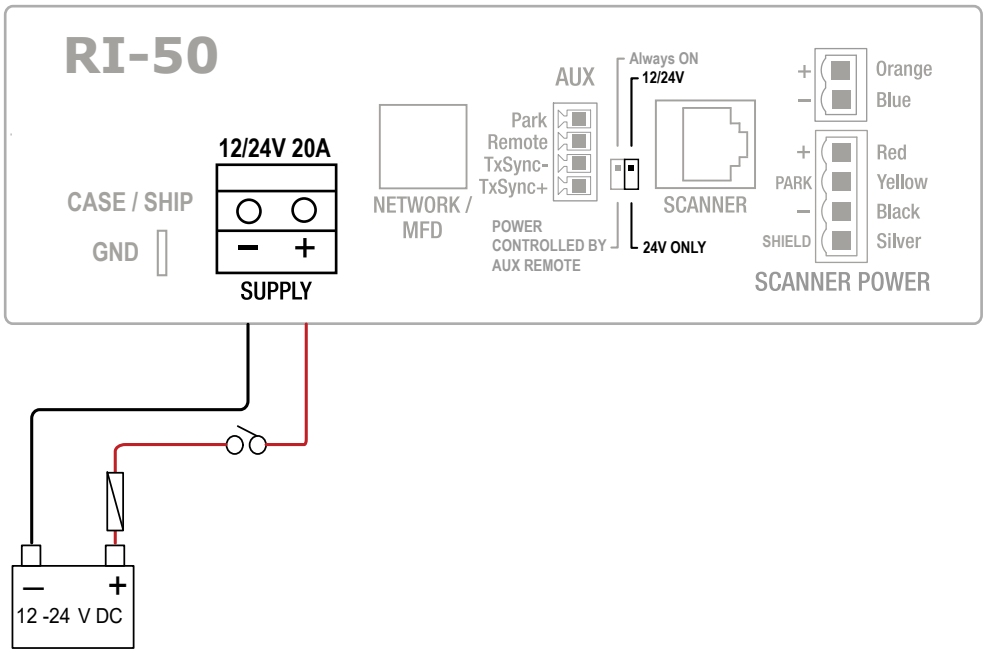

Ground the RI-50

You can ground the RI-50 using the ground terminal on the underside of the case. The chassis ground is DC isolated from power (–ve) to eliminate the risk of galvanic corrosion.

It is recommended that the RI-50 ground is connected to the vessel’s bonded ground or a non-bonded RF ground at the closest possible location, using 12 AWG wire (or thicker).

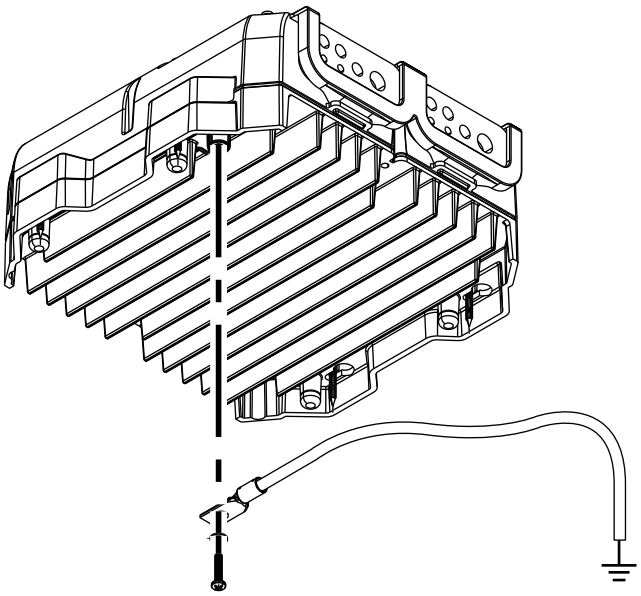

Alternatively, you can ground the RI-50 using the **CASE / SHIP GND** spade terminal on the circuit board.

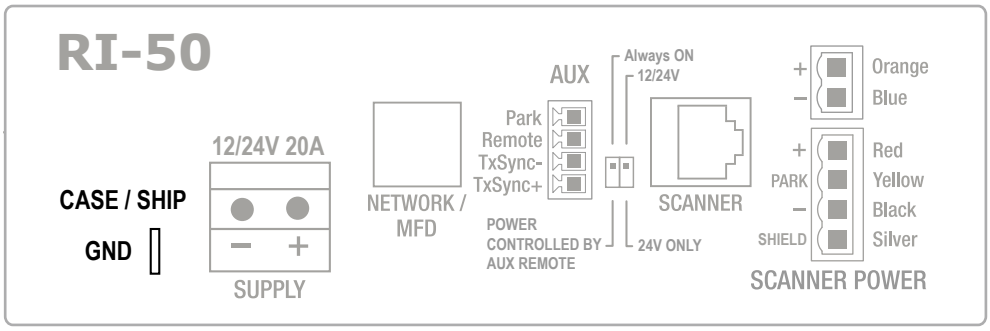

Activate remote power control

The RI-50 has an optional remote power control mode that enables a compatible multi-function display or ignition switch to control the power state of the radar. When the display or switch is turned on, the radar will turn on.

To use the remote power control function:

1 Move the power control switch from **Always ON** (indicated by **ON** on the switch itself) to **POWER CONTROLLED BY AUX REMOTE** (indicated by **1** on the switch).

2 Apply +V DC (5 V DC - 32 V DC) from a compatible multi-function display or ignition switch to the **Remote** input of the **AUX** connector. On a compatible multi-function display, this is the yellow wire in the power cable.

3 If you are using a multi-function display to power on the radar, set it to master (refer to the power control function in the display's user manual for instructions).

➔ *Notes:*

- If the power control switch is moved back to **Always ON**, the power wire in the **AUX Remote** port is ignored.
- If the radar is turned off via remote power control while transmitting, the radar will auto park the antenna before shutting down.
- There must be a common battery -ve for all devices on the power control bus.

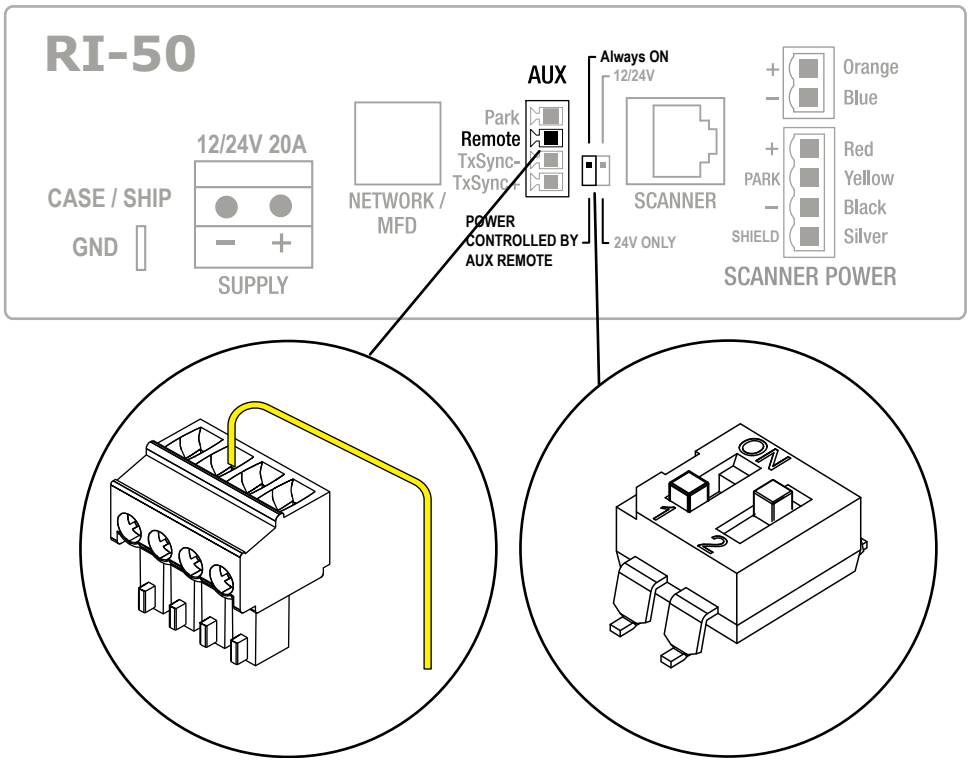

The following illustration is an example of a system using remote power control:

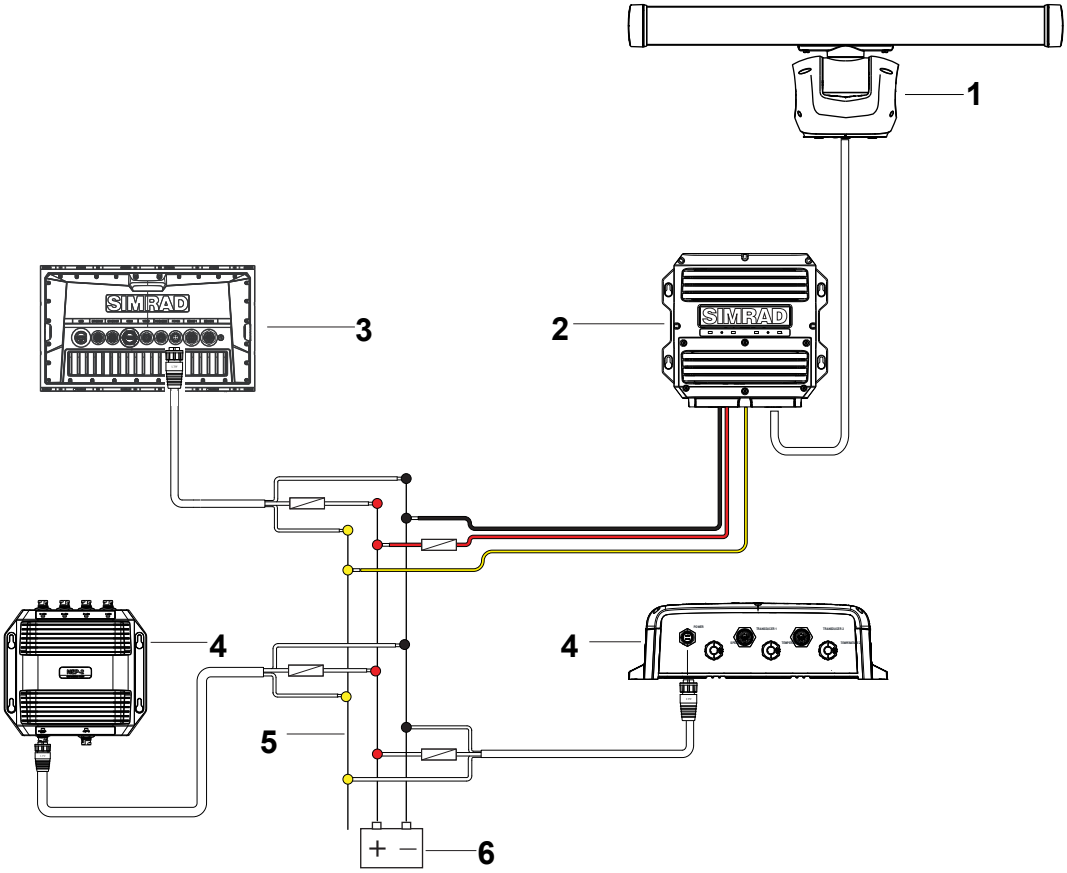

1	HALO radar pedestal and antenna
2	RI-50 radar interface module
3	Multi-function display set to power control master
4	Other Simrad® devices with remote power control
5	Power control bus
6	DC power

Activate antenna park

HALO 2000 Series and HALO 3000 Series radars have the ability to stop rotating the antenna and hold it at a predetermined angle in relation to the vessel's heading line. This park angle is set in the radar's software on your multi-function display.

In addition, there is a park angle retention feature which is a very low current electromagnetic brake that provides resistance for the antenna to maintain a parked angle against wind and movement when the radar is not powered.

The park brake requires a continuous low current DC supply (10-32 V DC). This draws less than 100uA. To activate the antenna brake park function, connect a signal wire from the positive side of the power supply to the **Park** input on the **AUX** connector.

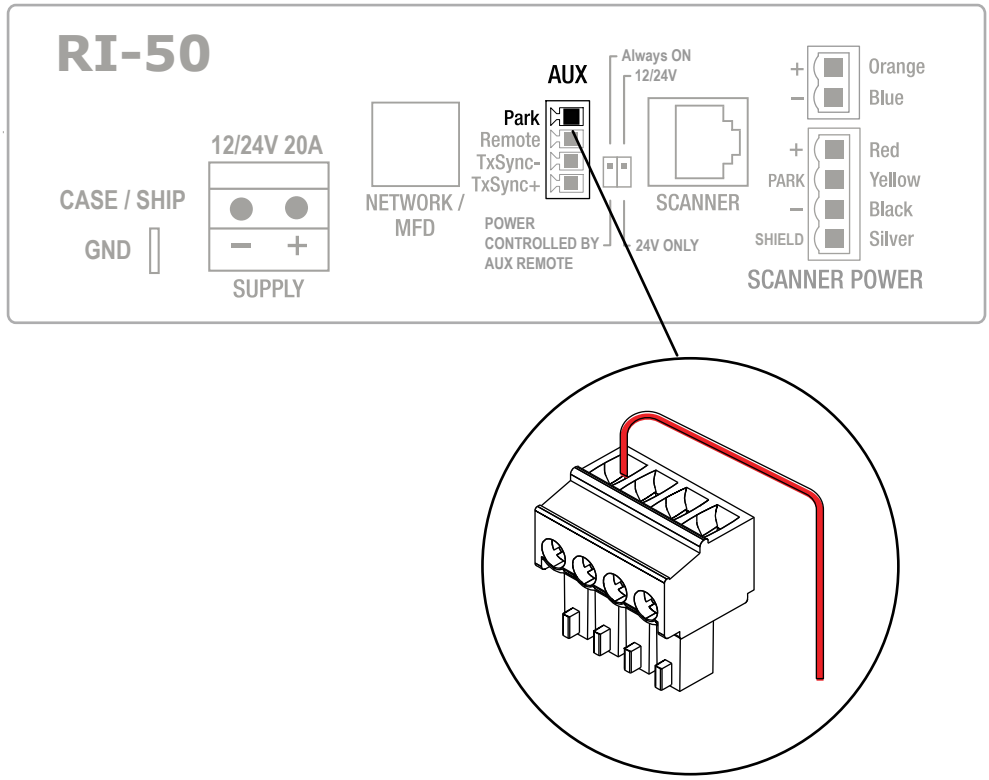

Connect the network cables

An Ethernet network is used to distribute the radar data to compatible multi-function displays. The RI-50 is connected to the Ethernet network using the supplied Ethernet cable and Ethernet adapter cable (RJ45 male to 5-pin female, 150 mm (5.9”)).

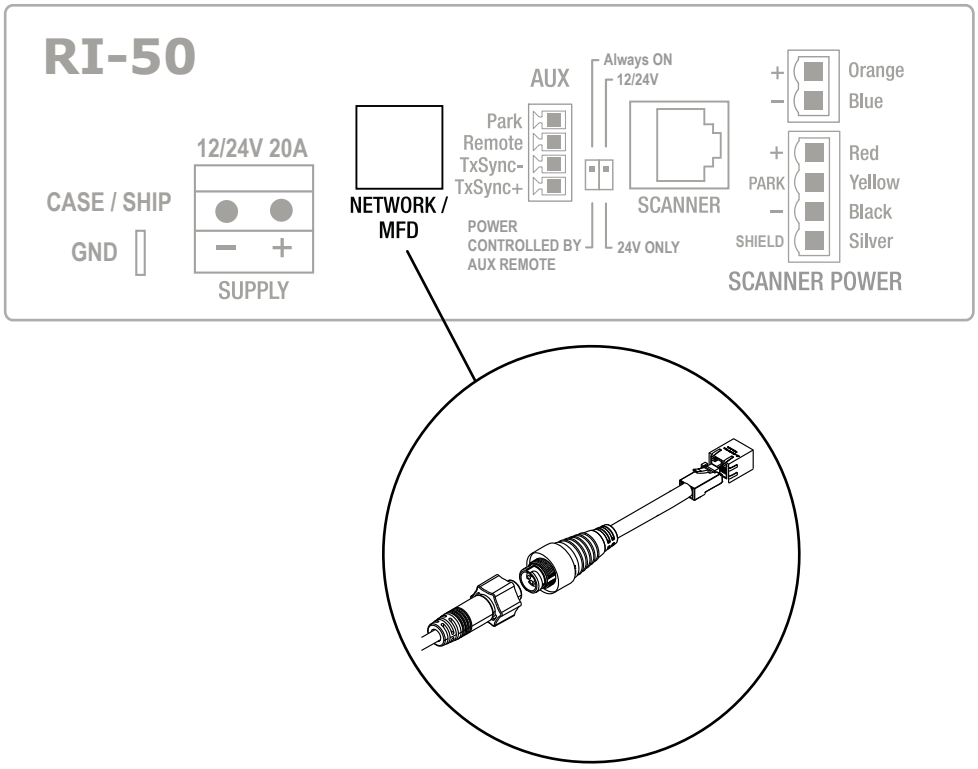

The RI-50 can be connected directly to any Simrad®-compatible multi-function display or to a network switch such as an NEP-2.

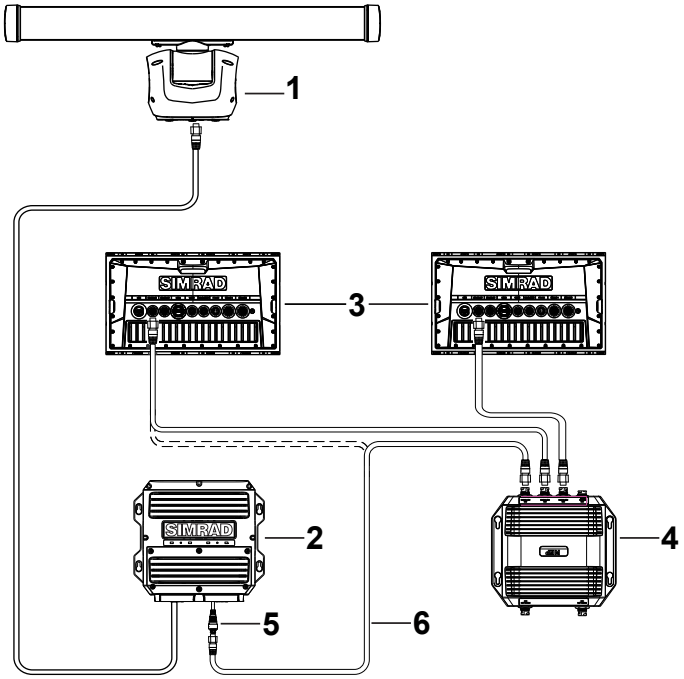

1	HALO radar pedestal and antenna
2	RI-50 radar interface module
3	Compatible multi-function displays
4	NEP-2 or device with a built-in Ethernet switch
5	Ethernet adapter
6	Ethernet cable 1.8 m (6.0”)

Additional radar functions

Additional radar functions such as VelocityTrack and ZoneTrack require good-quality, high-speed GPS position and heading data at 10 Hz or better. The GPS antenna must be mounted in a position that provides a clear view of the sky.

A quality 10 Hz compass such as the Precision 9 is suitable for heading, however for the very best performance, a GPS compass such as Simrad® HS75 or HS80A should be considered.

The connected multi-function display sends NMEA 2000® position and heading data to the radar via the Ethernet connection.

For radar chart overlay, an integrated GPS/compass sensor such as the Simrad® GS25 is suitable, however the compass is not suitable for VelocityTrack and ZoneTrack as it does not have 10 Hz heading output.

The following illustration is an example of a GPS and heading NMEA 2000® network:

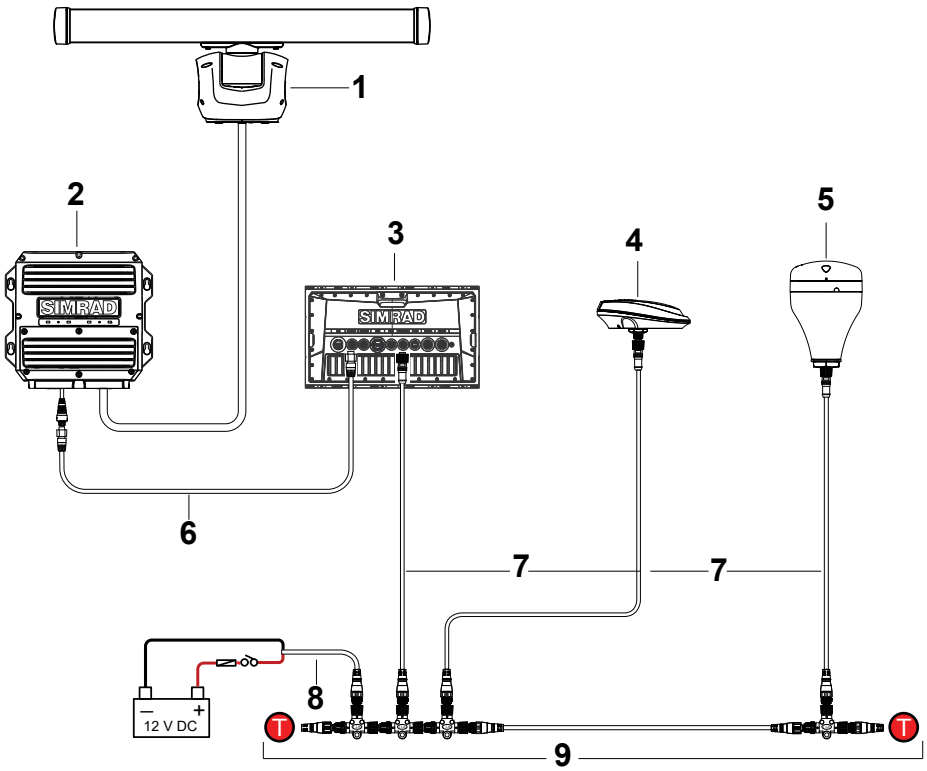

1	HALO radar pedestal and antenna
2	RI-50 radar interface module
3	Compatible multi-function display
4	NMEA 2000®-compliant heading sensor (10 Hz minimum)
5	GPS position sensor
6	Ethernet cable
7	Micro-C drop cables
8	Network power 12 V DC
9	Micro-C backbone (NMEA 2000®) with terminators

Start the radar

When you finish connecting the cables to your RI-50, replace the cover on the circuit board and set the service mode switch on the back of the pedestal to **I** (power supply enabled).

RI-50 LED indicator lights

LED lights on the front of the RI-50 communicate its operating status.

LED	Color	Indication	Likely cause
Power	Green steady	Power is applied and AUX remote power control input is active	Normal operation
	Off	No supply voltage or remote power control input is not active	Check remote switch position. Ensure 12-24V switch is in correct position for supply voltage
Fault		The fault indicator shows existing conditions as steady colors and historic conditions as blink patterns. Re-power the RI-50 to clear a fault/warning indication.	Faults are defined as conditions that could cause damage to the equipment. Warnings indicate conditions that can cause the RI-50 to change the operating state of the radar, e.g. switching it to standby. The historic indication helps to identify the cause of intermittent problems.
	Off	Normal	
	Blue	**Under** or **Over voltage**	Low supply voltage to the RI-50
	Purple	**Over current** including short circuits	Input current > 20A or output current > 8A
	Red	**Over temperature**	The internal temperature > 90°C (194°F). Caution: The heatsink case may be too hot to touch.
	Red blink	Once the RI-50 returns to a stable state, either RUN or OFF, the fault LED will indicate its last condition.	Blink patterns indicate the type of fault or warning that is detected. The patterns repeat every 5s. Only one pattern displays at a time. Patterns consist of 1 to 4 blinks with each blink being short (.) or long (-). Warnings start with short; faults start with long. There are no patterns with all long.
		Warning .-.-	Input voltage is unstable. Check the wiring and condition of the battery or power source.
		Warning .-.	The AUX: Remote input was OFF, < 2.5V. Check the Remote Bypass switch or the external connection if used.
		Warning ..-.	Flat battery or very low input voltage, < 5V (12V) or < 9V (24V). Check the input voltage.
		Warning .	Low input voltage in 12V system, < 9.5V. The RI-50 switched to standby due to low input voltage. Could be engine cranking or other heavy load.
		Warning ..	Low input voltage in 24V system, < 19V. The RI-50 switched to standby due to low input voltage. Could be engine cranking or other heavy load.

		Warning ...	The RI-50 detected voltage on its output before it turned on. If the radar was only off for a short time, it is normal for there to be residual voltage. However, it can also indicate the output switch in the RI-50 has been damaged and needs repair. This will not stop the radar from working, but does mean the only remaining fault protection in the RI-50 is the 40A input fuse.
		Warning	High input voltage, > 34V. Check your input power source. Input voltages > 36.5V can damage the RI-50.
		Fault -.	Output voltage too high, > 54V. There is a risk of damage to the connected pedestal. Get the RI-50 checked.
		Fault -..	Average input current too high, > 20A. The RI-50 will retry up to 5 times before shutting down. Can be caused by low input voltage and/or excessive load from the pedestal.
		Fault -...	Average output current too high, > 8A. The RI-50 will retry up to 5 times before shutting down. Caused by excessive load from the pedestal.
		Fault -.-.	Typically indicates a short circuit on the pedestal cable. The output current was > 10A. The RI-50 will retry up to 5 times before shutting down. Check the pedestal interconnection cable for damage.
		Fault -.-	Over temperature, > 90°C (194°F). The RI-50 will re-start after cooling down. The RI-50 should be mounted as shown in the **Hardware mounting** section of this manual so that air can flow over the heatsink. Low input voltage and heavy pedestal load will increase heating.
		Fault --.	The wrong pedestal type has been connected. Pedestals designed to work with RI-12 interface modules (older) will not work with RI-50s and could be damaged.
		Fault -..-	A software upgrade is required. Return the RI-50 for service.
Status	Green	Normal operation	Output voltage > 45V. The radar will operate regardless of any fault or warning indication.
	Green/orange fast blinking	Wrong or no radar connected	Output voltage 16V to 45V. Check the pedestal is connected and it is a compatible model.
	Orange	Pending shutdown	Output voltage 16V to 45V. Typically the radar is given 30 seconds to prepare for shutdown.
	Red	Radar is off	Output voltage <16V. Typically the output is off.

Ethernet	Green blink	Successful communication with a multi-function display	Normal operation. The LED activity increases with increasing Ethernet traffic.
	Off	Communication not established	Ethernet cable disconnected or faulty Ethernet cable to display.

Fuse

In the rare event that the non-replaceable fuse blows on your RI-50 circuit board, the **BLOWN FUSE** LED will light up while power is supplied to the RI-50. This indicates an internal fault and you will need to replace your RI-50 unit.

➔ *Note: A blown fuse indicates an internal fault with your RI-50. It does not indicate a fault with the external wiring to the RI-50 or a fault with the radar pedestal.*

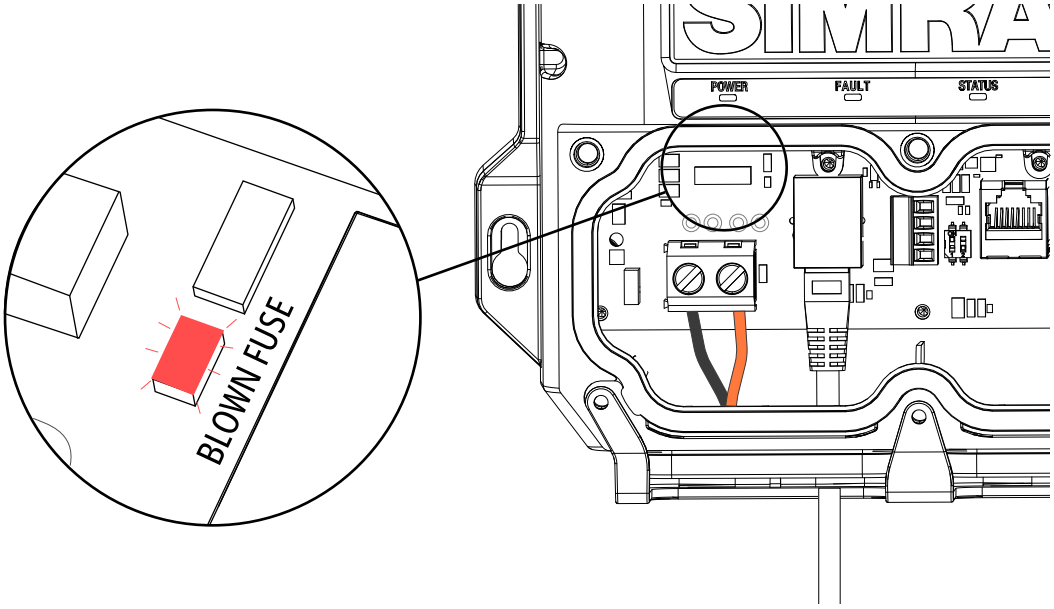

SETUP AND CONFIGURATION

Make the following settings before use. Refer to the documentation supplied with your display unit to locate and adjust the settings.

Radar source

In a system with more than one radar, the device to configure is selected from here.

→ *Note: Radars that support dual radar mode are represented twice in the source list, with an A and a B suffix.*

Radar status

Used to view information about your radar, such as the software version, serial number and operating hours.

Antenna setup

X-axis and **Y-axis.** Used to set the approximate position of the antenna on the vessel. This enables your vessel icon to be positioned correctly on the PPI.

Height. Used to set the height of the antenna above the water line. Ensure the antenna height is set correctly, as it affects the sea clutter function. Do not set the height to zero.

Span. Used to select the length of your antenna.

Adjust bearing alignment

Used to compensate for any slight misalignment of the pedestal during installation and to make sure targets and bearings taken with the electronic bearing line display accurately. The adjustment is made by aligning the heading marker on the screen with the center line of the vessel.

Sidelobe suppression

Used to increase the suppression if there are false targets appearing as arcs radiating from either side of an actual target (typically large structures such as steel hulled ships, container wharves and large buildings). By default this control is set to Auto, and normally should not need to be adjusted.

→ *Note: This setting should only be adjusted by experienced radar users. Target loss in harbor environments can occur if it is not adjusted correctly.*

Sector blanking

Used to stop the radar transmitting in the direction of structures that could cause unwanted reflections or interference to appear on the radar image. Four sectors can be set, the bearing of which is measured from the bow of the vessel to the center line of the sector.

Adjust open array park angle

Used to set the resting position of the antenna relative to the heading line of the radar when the radar is set to standby. The antenna will stop rotating at the desired offset. Optionally, the antenna can be held in place against wind by connecting the antenna park wire.

→ *Note: When entering standby, the antenna may rotate multiple times before coming to rest.*

HALO light

Used to control the brightness level of the blue LED accent light on the pedestal. There are four brightness levels. The level can only be adjusted when the radar is in standby mode.

⚠ **Warning: The pedestal's blue accent lighting may not be approved for use in your boating location. Check your local boating regulations before turning the blue accent light on.**

Reset radar to factory defaults

Used to reset the radar's control settings (not installation settings) to their factory defaults.

Error codes

If you encounter an error code, power cycle the radar. If the error code reappears, refer to this list for guidance.

Error code	Description	Recommendation
0x00000001	Radar saved settings corrupted	Radar will revert to factory defaults. Re-enter your settings including installation settings.
0x0001000C	Scanner not detected	Check the pedestal interconnection cable connections. Power cycle the radar. Check input voltage.
0x0001000D	Transmitter overheat (soft)	Try changing to shorter ranges <6 NM. Switch to STBY. Allow unit cool.
0x0001000E	Transmitter overheat (hard)	Switch to STBY. Isolate power to the radar and contact service.
0x0001000F	Signal processing error	Unit should revert to STBY. Select transmit. If problem persists, power cycle the radar.
0x00010017	Scanner failure	Contact service
Power supply		
0x00010010	Power supply overheating	Switch to STBY. Allow unit to cool then retry.
0x00010011	Power supply voltage error	Check pedestal interconnection cable for corrosion or damage.
0x00010012	Power supply overload	Contact service
0x00010013	Power supply hardware fault	Contact service
0x00010014	Power supply comms fault	Contact service
0x00010019	Low battery voltage (Supply voltage low)	Recharge and check supply voltage. Restart the radar.
0x00010016	LED Lighting fault	Turn accent lighting off then retry.
0x00010018	Radar interface box fault	Check LED status light. Check the pedestal interconnection cable for damage.
Mechanical		
0x00010001	Zero bearing sensor fault	Contact service
0x00010002	Bearing sensor fault	Contact service
0x00010015	Mechanical transmission fault	Contact service
0x00010003	Motor drive fault	Contact service
0x0001001A	Motor or antenna has stalled	Power down the radar. Check and clear antenna obstructions such as ice.

UPGRADING

HALO 3000 Series radars have higher current draw than HALO 3/4/6 Series radars due to a more powerful motor and higher transmit power.

If you are upgrading from a HALO 3/4/6 Series radar to a HALO 3000 Series radar, you should change the interconnection cable.

If you are upgrading from a HALO 3/4/6 Series radar to a HALO 2000 Series radar, you may use the existing interconnection cable but we recommend you inspect the condition of the connectors.

→ *Note: At the time of release, HALO 2000 Series and HALO 3000 Series radars work with Simrad® GO XSR, GO XSE (9/12), NSS evo3, NSS evo3S, NSO evo3, NSO evo3S and NSO evo3S MPU systems. They also work with Simrad® R2009 and R3016 radar control units.*

Record the old settings

1 Take note of the old radar settings, i.e. antenna height and span (if re-using the antenna), range offset, bearing alignment, sidelobe suppression, sector blanking and open array park angle. This will help you set up your new radar on the display unit.

Isolate power to the radar

2 Turn off the circuit breaker or remove the fuse.

Remove the old pedestal

3 Set the service mode switch at the back of the pedestal to **0** (power supply disabled).

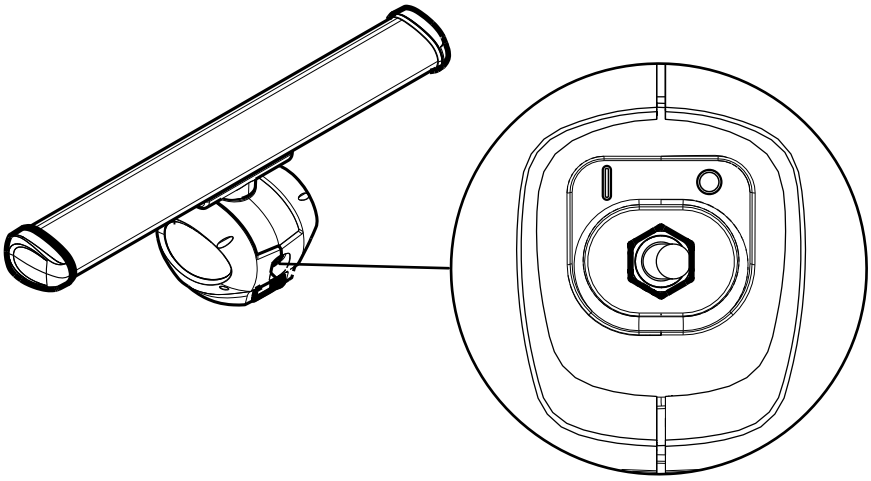

4 Disconnect the interconnection cable from the pedestal.

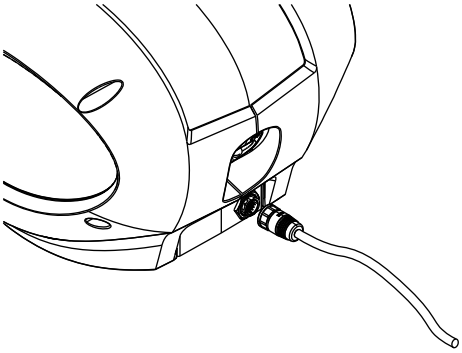

5 Cover the 14-pin end of the interconnection cable to protect it from water and contaminants.

6 Use a socket and torque wrench to remove the dome nuts that hold the antenna to the pedestal.

7 Carefully lift the antenna off the pedestal.

8 If re-using the antenna, cover the waveguide to protect it from water and contaminants.

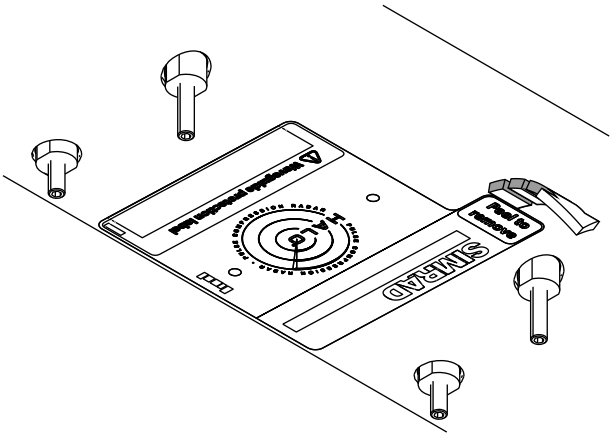

Remove the RI-12

9 Remove the circuit board cover from the RI-12 by unscrewing the six retaining screws.

10 Remove the grommet retaining clip.

11 Remove the rubber grommets.

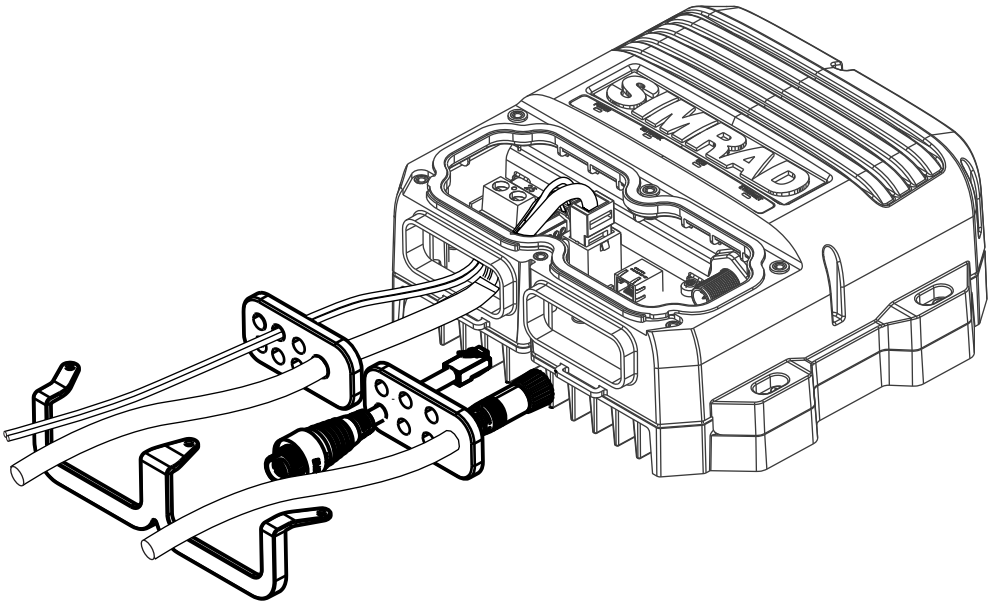

12 Disconnect the power cable from the **SUPPLY** connector.

13 Unplug the RJ45 connector end of the interconnection cable from the **SCANNER** connector.

→ *Note: Keep wires connected to RJ45 connector.*

14 Unplug the green 4-way connector from **SCANNER POWER** connector.

→ *Note: Keep wires connected to 4-way connector.*

15 If used, unplug the AUX connector.

→ *Note: Keep wires connected to the AUX connector.*

16 Unplug the Ethernet cable.

17 Unplug the Micro-C NMEA 2000® connector (This cable can be removed as it is not needed with the RI-50 interface module.)

18 Unscrew the RI-12 from its mounted location.

19 Remove the grounding wire if used.

Install the RI-50 and new pedestal

To install the RI-50 and your new HALO 2000 Series or HALO 3000 Series pedestal, follow the steps in the **Hardware mounting** and **Wiring** sections in this manual.

→ *Note: If you are re-using the original interconnection cable, only connect four wires to the 4-way **SCANNER POWER** connector on the circuit board. You won't use the 2-way connector.*

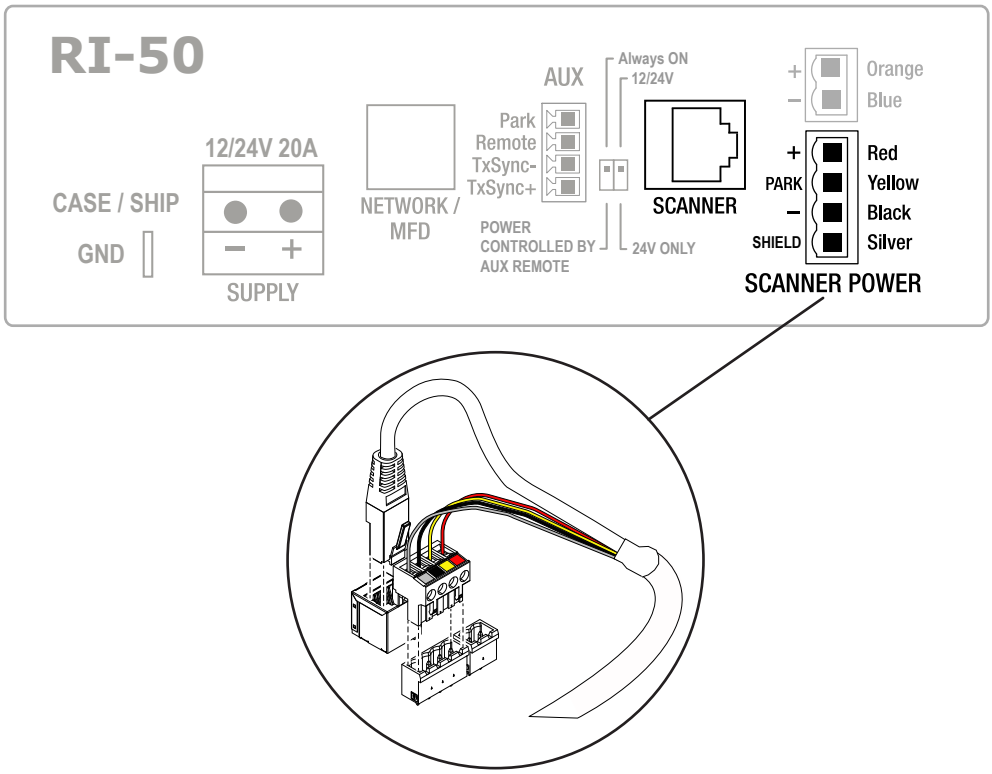

SPECIFICATIONS

Type of approval	FCC/IC/RED Type Certification HALO 2000 Series FCC ID: RAYHALO2000 (Navico Inc.) IC ID: 978B-HALO2000 (Navico Inc.) HALO 3000 Series FCC ID: RAYHALO3000 (Navico Inc.) IC ID: 978B-HALO3000 (Navico Inc.) EU RED: Emissions compliant to SM1541-4 (including -40 dB/dec future design objectives) and EN302-248 V2.1.1	
Environmental		
Operating temperature	-25°C to +55°C (-13°F to +131°F)	
Relative humidity	IEC60945 Exposed product	
Vibration	IEC60945 Exposed product	
UV	IEC60945 Exposed product	
Waterproofing	IPX6 for the pedestal and antenna IPX5 for the RI-50 interface module	
Relative wind velocity	HALO 2000 and HALO 3000 radars with 3 ft, 4 ft or 6 ft antenna have a wind rating of 80 knots at 48 rpm in both 24V and 12V systems.	
Power		
Power consumption	HALO 2000 Series	235 W (peak, 12V) at maximum wind velocity 380 W (peak, 24V) at maximum wind velocity 45-60 W (average) at zero wind velocity 11 W (average) in standby mode Refers to RI-50 input terminals
	HALO 3000 Series	250 W (peak, 12V) at maximum wind velocity 395 W (peak, 24V) at maximum wind velocity 45-75 W (average) at zero wind velocity 11 W (average) in standby mode Refers to RI-50 input terminals
DC input	Radar system input 12 OR 24 V DC into the RI-50 12 V Systems 10.8 - 15 V DC 24 V Systems 20 - 31.2 V DC Pedestal voltage input is 50 V DC nominal generated by RI-50	
Power up time	30-40 seconds from POWER OFF to TRANSMIT	
Physical		
Height	429 mm (16.88") with antenna mounted	
Antenna swing circle diameter	3 ft model: 3.75 ft / 1142 mm / 44.96" 4 ft model: 4.73 ft / 1443 mm / 56.81" 6 ft model: 6.72 ft / 2047 mm / 80.59"	
Component weights	Pedestal Antenna 3 ft Antenna 4 ft Antenna 6 ft RI-50 10 m (33 ft) cable 20 m (66 ft) cable 30 m (100 ft) cable	20.3 Kg (44.8lb) 4.1 Kg (9.0 lb) 4.9 Kg (10.8 lb) 6.5 Kg (14.3 lb) 1.6 Kg (3.5 lb) 1.6 Kg (3.5 lb) 3.2 Kg (7.1 lb) 4.7 Kg (10.4 lb)

Antenna		
Rotation speed	16 to 48 rpm depending on operating mode.	
Beam width	3 ft model: 2.4°+/-10% (-3 dB width) – 1.7° with Beam sharpening mode on 4 ft model: 1.8°+/-10% (-3 dB width) – 1.3° with Beam sharpening mode on 6 ft model: 1.2°+/-10% (-3 dB width) – 0.8° with Beam sharpening mode on	
Beam width vertical	25° +/-10 % (-3 dB width)	
Plane of polarization	Horizontal polarization	
Sidelobe level 3 ft	Below -23 dB max. (within ±10°) Below -30 dB max. (outside ±10°)	
Side lobe level 4 ft	Below -23 dB max. (within ±10°) Below -30 dB max. (outside ±10°)	
Side lobe level 6 ft	Below -23 dB max. (within ±10°) Below -30 dB max. (outside ±10°)	
Radar		
Peak power output	HALO 2000 Series	50 W ± 10% under any transmit condition – up to 10% duty cycle max
	HALO 3000 Series	130 W ± 10% under any transmit condition – up to 13% duty cycle max
Transmitter	Solid state module with no long-term transmitter power degradation	
Transmitter frequency	Synthesized - Upper half of X-Band 9.390 - 9.495 GHz	
Pulse length/PRF and compression ratio	Pulse length: 0.04 usec Chirp length: 2-64 usec Chirp bandwidth: 2-48 MHz Up to 1 pulse and 4 chirps in a burst with burst repetition rate of 500-3000Hz. Range and mode dependent. Effective pulse compression ratio less than 150 in all modes.	
Instrumented range	HALO 2000 Series (all antenna sizes)	72 nm
	HALO 3000 Series (all antenna sizes)	96 nm
SART/RACON triggering	Yes – trigger distance: about 1nm max – weather, sea state, and SART position dependent	
Duplexer	Circulator and isolator	
LNA	GaAs front-end	
IF section	Center frequency: 31.25 MHz Bandwidth: 50 MHz max.* A/D; 16 bit 125 MSPS *Narrower bandwidths defined by signal processing	
Noise figure	5 dB (Min) at antenna input	
Compass safe distance	Pedestal	STD. 1.0 m (3.3 ft) Steer 0.5 m (1.6 ft)
	RI-50	1.0 m (3.3 ft)

Other	
Communication ports	Ethernet 10/100 Base-T RJ-45 for radar data and control
Transmit synchronization	RS-422 output
Remote power on	Yes
Antenna park hold	Yes (while radar is unpowered)
Motor	Brushless with solid state commutation with electromagnetic braking for parking.
Interconnecting cable	Available in 10 m (33 ft), 20 m (66 ft), 30 m (100 ft) lengths. 20 m (66 ft) length cable included with unit. Options for cable to exit from rear of pedestal or pole mount. 3G/4G or HALO 3/4/6 Series interconnection cables can be used with the HALO 2000 Series only.

DRAWINGS

RI-50

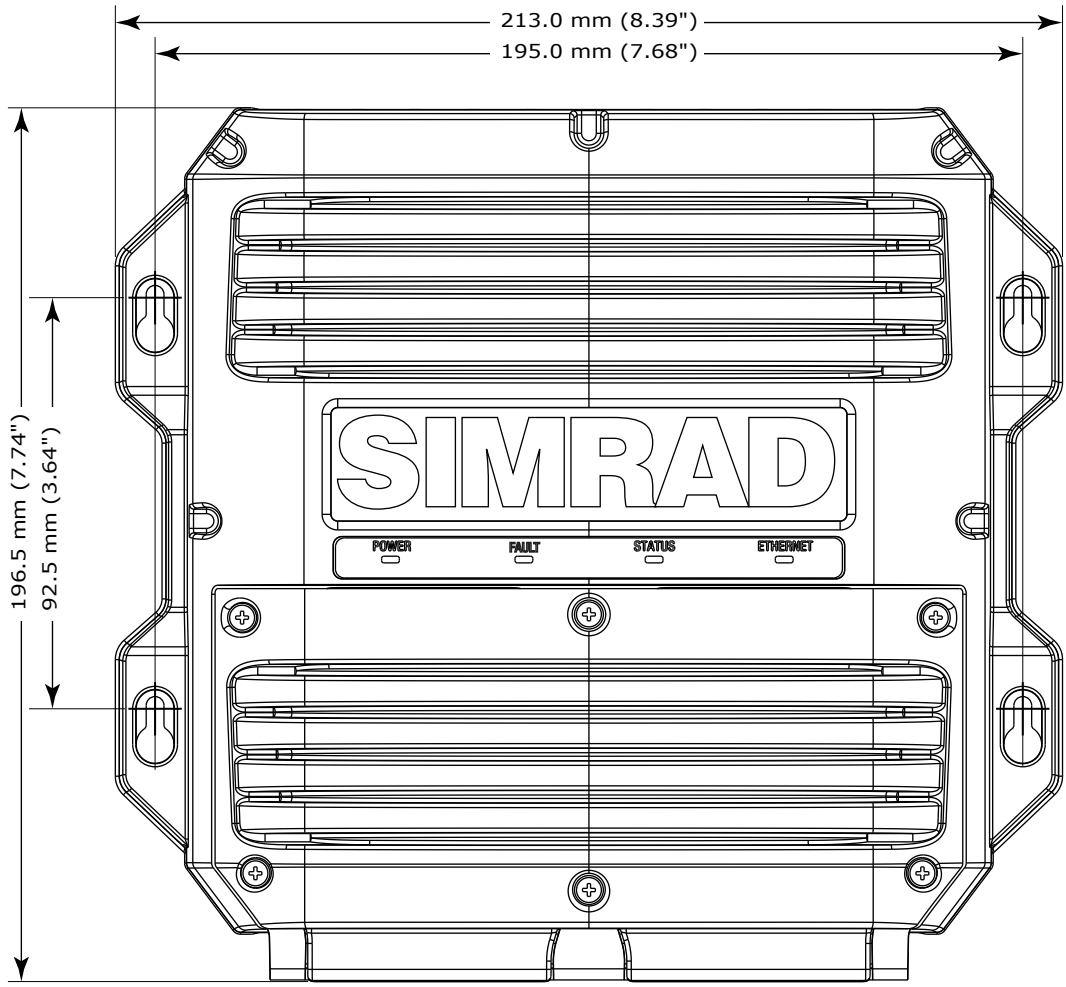

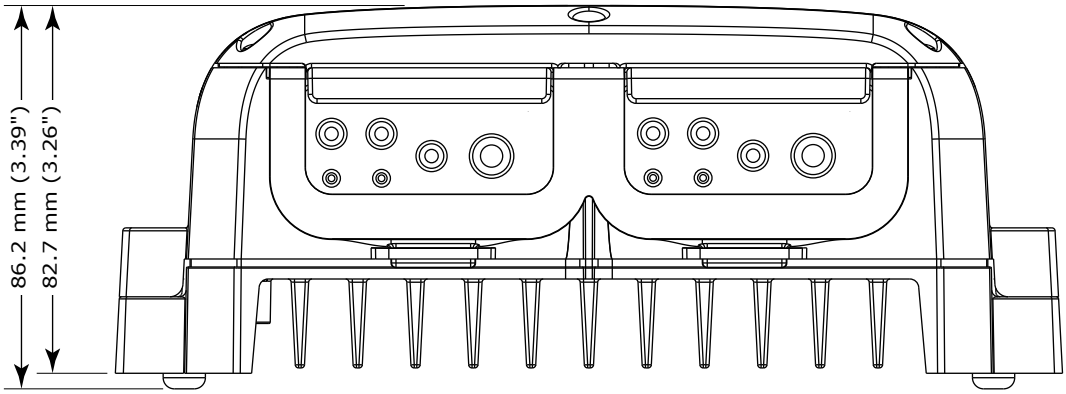

Pedestal and antennas

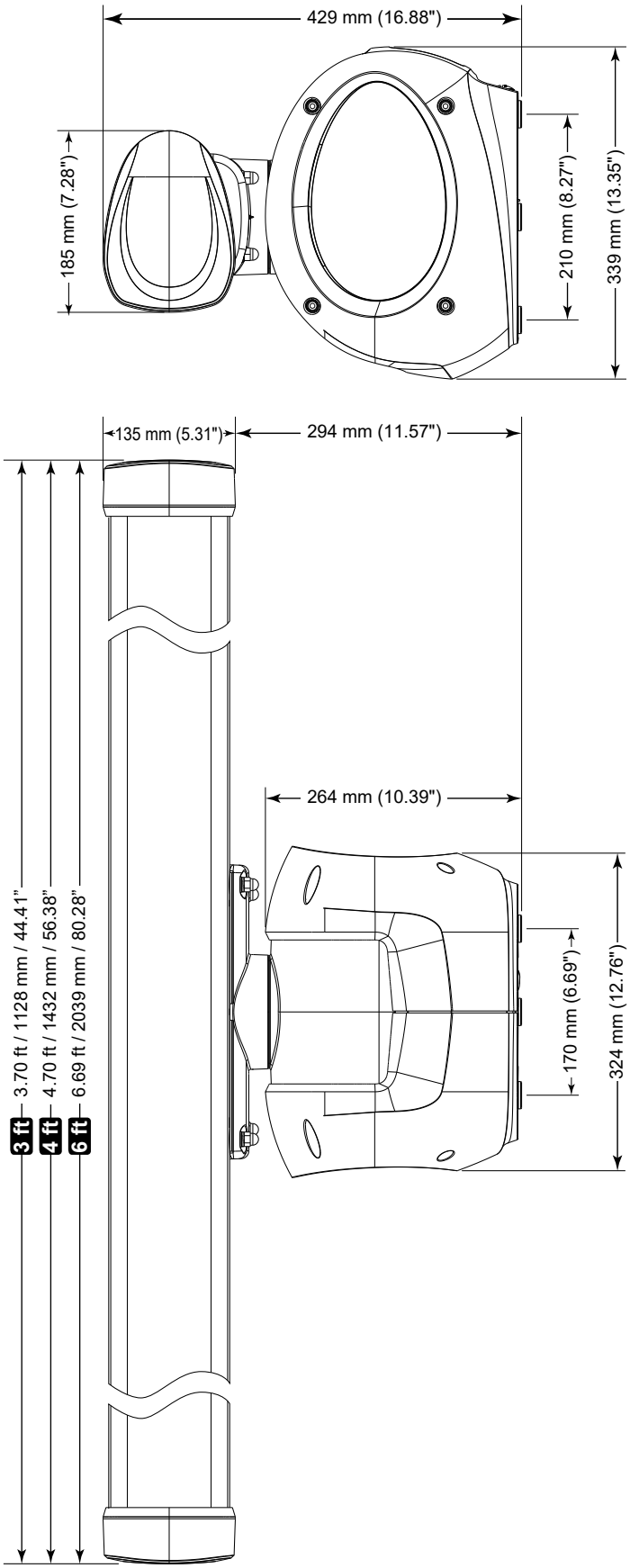

Antenna swing circle diameters

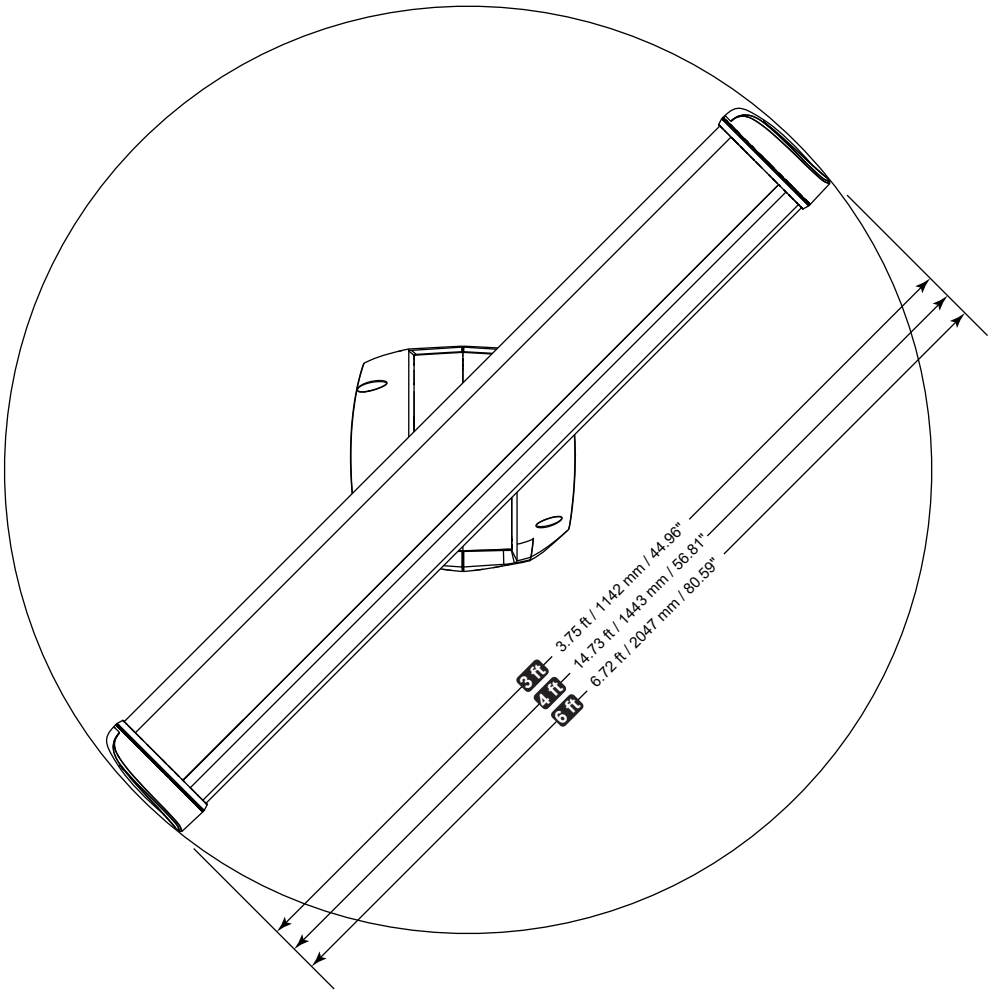

PARTS LIST

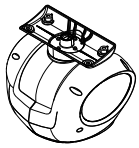	000-15762-001	HALO 2000 Series pedestal
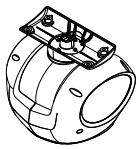	000-15766-001	HALO 3000 Series pedestal
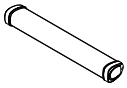	000-11464-001	3 ft antenna 3.70 ft / 1128 mm / 44.41″
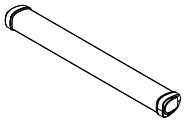	000-11465-001	4 ft antenna 4.70 ft / 1432 mm / 56.38″
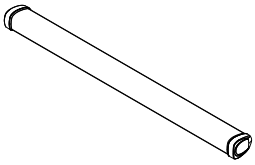	000-11466-001	6 ft antenna 6.69 ft / 2039 mm / 80.28″
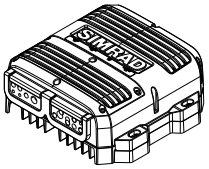	000-15757-001	RI-50 radar interface module
	000-15767-001	Interconnection cable 10 m (33 ft)
	000-15768-001	Interconnection cable 20 m (65.6 ft)
	000-15769-001	Interconnection cable 30 m (98.5 ft)
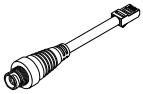	000-11246-001	Adapter cable: yellow Ethernet female to RJ45 male. 150 mm (5.9”)

®Reg. U.S. Pat. & Tm. Off, and ™ common law marks.
Visit www.navico.comintellectual-property to review the global trademark rights and accreditations for Navico Holding AS and other entities.

www.simrad-yachting.com