SIMRAD®

# V5043
# Class A AIS Transceiver

## Installation manual

English

Scan here
to save a copy

www.navico-commercial.com

# PREFACE

## Copyright

© 2024 Navico Group. All Rights Reserved. Navico Group is a division of Brunswick Corporation.

## Trademarks

®Reg. U.S. Pat. & Tm. Off, and ™ common law marks.

Visit **www.navico.com/intellectual-property** to review the global trademark rights and accreditations for Navico Group and other entities.

- Navico® is a trademark of Navico Group.
- Simrad® is a trademark of Kongsberg Maritime AS, licensed to Navico Group.
- NMEA®, NMEA 0183® and NMEA 2000® are trademarks of the National Marine Electronics Association.
- SD® and microSD® are trademarks of SD-3C, LLC.

## Disclaimer

Navico Group is devoted to publish and maintain this product manual. As we continue to improve our AIS products to satisfy all customers' needs, information in this document is subject to change without notice. Navico Group does not make any representations or warranties (implied or otherwise) regarding the accuracy and completeness of this document and shall in no event be liable for any loss of profit or any commercial damage, including but not limited to special, incidental, consequential, or other damage.

## Governing language

This statement, any instruction manuals, user guides and other information relating to the product (Documentation) may be translated to, or has been translated from, another language (Translation).

In the event of any conflict between any Translation of the Documentation, the English language version of the Documentation will be the official version of the Documentation.

## Safety Warning

It is important to know that AIS is designed for the purpose of anti-collision and serves as a complement to navigation. It is not the absolute navigational equipment and does not replace any navigational system installed onboard. This device is meant to enhance situational awareness and may not prevent vessel collisions in all circumstances. It is your obligation to be aware of your surroundings and to ensure safe operation of the vessel.

Any AIS device cannot guarantee monitoring and receiving signals from all vessels in the surroundings unless those vessels are equipped with AIS devices.

### ELECTRICAL SHOCK HAZARD

Improper disassembly or modification could cause electrical shocks, fire, or personal injury.

Only qualified personnel could work on the interior of the equipment.

### MAKE SURE THE POWER SOURCE AND THE POWER INPUT MATCH

Incorrect power sources will damage the equipment and may even result in fire.

Please ensure the correct power input on the adaptor before installation.

### AVOID DIRECT CONTACT WITH RAIN OR SPLASHING WATER

Electrical shock or fire could be resulted if water leaks into the equipment.

### NOTE/INFORMATION

➔ ***Note:*** *Important notices and information will be noted in this manual.*

## Product category

This product is categorized as "protected" in accordance with the requirements as defined in IEC 60945.

## Compass safe distance

Safe distance to the transceiver (and junction box) unit is:

- Standard magnetic compass: 0.30 m
- Steering magnetic compass: 0.30 m

## RF exposure safe distance

The Simrad® V5043 Class A AIS Transceiver has been tested and meets applicable limits for radio frequency (RF) exposure. This device generates and radiates RF electromagnetic energy and requires a Maximum Permissible Exposure of 1.9 m from the antenna during operation.

## Hardware/software version

- Software version: 2.X.X-XX

The model name/number, hardware information, and firmware (software) version of the transceiver can be identified through MKD at **Menu > Diagnostics > Version**. The software maintenance/upgrade of the transceiver can be carried out onboard via microSD® card. The onboard documentation in **Appendix C: Installation and Maintenance Record** on page **61** can be used to assist reflecting software maintenance records.

## Type approval

The Simrad® V5043 Class A AIS Transceiver complies with applicable international standards and is type approved in accordance with the European Marine Equipment Directive.

## Declaration of conformity

Navico declare under our sole responsibility that this Simrad® V5043 Class A AIS Transceiver conforms with the requirements of the European Council Directive 2014/90/EU on Marine Equipment, modified by Commission Implementing Regulation (EU) 2023/1667 (8 August 2023) - Wheelmark. All compliance documents are available from the V5043 section on the following website:

**www.navico-commercial.com**.

## Disposal instruction

Do not dispose of this device with unsorted waste.

Improper disposal may be harmful to the environment and human health. Please refer to your local waste authority for information on return and collection systems in your area.

## Contact information

For sales, services, and technical support, please contact a Simrad® representative at: **www.navico-commercial.com**.

## Warranty

The warranty card is supplied as a separate document. In case of any queries, refer to the brand website for your unit or system: **www.navico-commercial.com**

## About this manual

Features described and illustrated in this guide may vary from your display unit due to continuous development of the software.

Document version 001.

For the latest version of this document in supported languages, visit: **www.navico-commercial.com**.

# CONTENTS


**5 What is AIS?**

**6 V5043 System overview**
6 Product description
6 Main features
7 Interconnection diagram

**8 Installation**
8 Equipment in the box
9 Installation procedure
9 RF cable requirements
10 GPS antenna installation
10 VHF antenna installation
12 Mounting the V5043 transceiver main unit
15 Mounting the junction box
16 Junction box connectors
19 Connecting the transceiver to the junction box
20 Connecting to power supply
20 Connecting the optional pilot plug
21 Password

**22 Product specifications**

**26 Mechanical dimensions**
26 Transceiver main unit
28 Junction box
28 Extension cable
28 Ethernet cable
29 Mounting template (V5043, not to scale)
29 GPS antenna
30 Pilot plug (optional)

**31 Troubleshooting**
32 Troubleshooting alarm messages

**34 Appendix A: Data Interface technical information**
34 AIS interface overview
35 Data interface (IEC 61162-2)
37 Supported data sentences (IEC 61162)
37 Interpretation of input sentences
49 Interpretation of output sentences

**58 Appendix B: NMEA 2000® PGN Information**

**61 Appendix C: Installation and Maintenance Record**
61 Installation and maintenance record
61 AIS Class A transceiver information
62 GPS (GNSS) antenna location
62 Connected sensors and devices
63 Installer information

# WHAT IS AIS?

The Automatic Identification System (AIS) is a Very High Frequency (VHF) radio broadcasting system that transfers packets of data over the VHF data link (VDL) and enables AIS equipped vessels and shore-based stations to exchange identification information and navigational data. Ships with AIS transceivers continually transmit their ID, position, course, speed and other data to all nearby ships and shore stations. Such information can aid greatly in situational awareness and provide a means to assist in collision avoidance.

AIS equipment is standardized by ITU, IEC, IALA and IMO and is subject to approval by a certification body. The following AIS devices have been developed for variant applications.

## AIS Class A

Mandated by the IMO for vessels of 300 gross tonnages and upwards engaged on international voyages, cargo ships of 500 gross tonnages and upwards, as well as passenger ships. It transmits typically on 12.5 W output power.

## AIS Class B

Provides limited functionality and is intended for non-SOLAS commercial vessels and recreational vessels. It transmits typically on 2 W output power.

## AIS Receiver

Only receives AIS signal and does not have transmitter to send out AIS signal. Suitable for recreational vessels that do not want to send out its vessel information.

## AIS Base Station

Is provided by aids-to-navigation authorities to enable the ship to shore / shore to ship transmission of information. Networked AIS Base Stations can assist in providing overall maritime domain awareness.

## AIS AtoN (Aids to Navigation)

Provides an opportunity to transmit position and status of buoys and lights through the same VDL, which can then show up on AIS-ready devices within the range.

## AIS SART

Search and Rescue Transmitter using AIS can be used to help determine the location of a vessel in distress. It is typically used on life rafts.

## AIS on search and rescue (SAR) aircraft

AIS is used on airplanes and helicopters to assist search and rescue operations.

# V5043 SYSTEM OVERVIEW

## Product description

The Simrad® model V5043 is a new generation AIS Class A transceiver fully compliant with IMO, IEC, and ITU international standards. It provides a compact single box solution, easy to install and operate. The product is designed with advanced technology which sets a new standard for quality, performance, and value. It is an excellent choice for SOLAS vessels, commercial ships, professional vessels, and non-SOLAS applications.

The V5043 can be connected to the ship's sensors as required by the IALA guidelines through junction box. The device can also interface external navigation and presentation systems that support IEC 61162-1 related sentences. It is also capable for connection to Long Range system like Inmarsat C. The V5043 supports both SOLAS and Inland AIS mode which is configurable by the software.

The color LCD display and menu keypads provide an intuitive graphical user-friendly interface to the system. It can display the location of other vessels, aids to navigation and search and rescue vessels. The AIS transmit and receive status are shown on the screen which helps user to know the working status of the unit easily. The LCD and keypad can also be used to send and receive messages, perform configuration as well as supervise the system status.

## Main features

- Compact AIS Class A solution, easy to install and operate
- Fully compliant with IMO, IEC, and ITU international standards
- Color 4.3" LCD display with various display modes
- User-friendly intuitive GUI and keypad operation
- IMO/Inland AIS mode selectable
- Compliance with CESNI Inland AIS test standard Ed. 2021/3.0
- Multiple sensor input ports and bidirectional data ports
- USB, NMEA 2000®, and Ethernet connectivity, SD® card for software upgrade
- Support type P of BAM function type

# Interconnection diagram

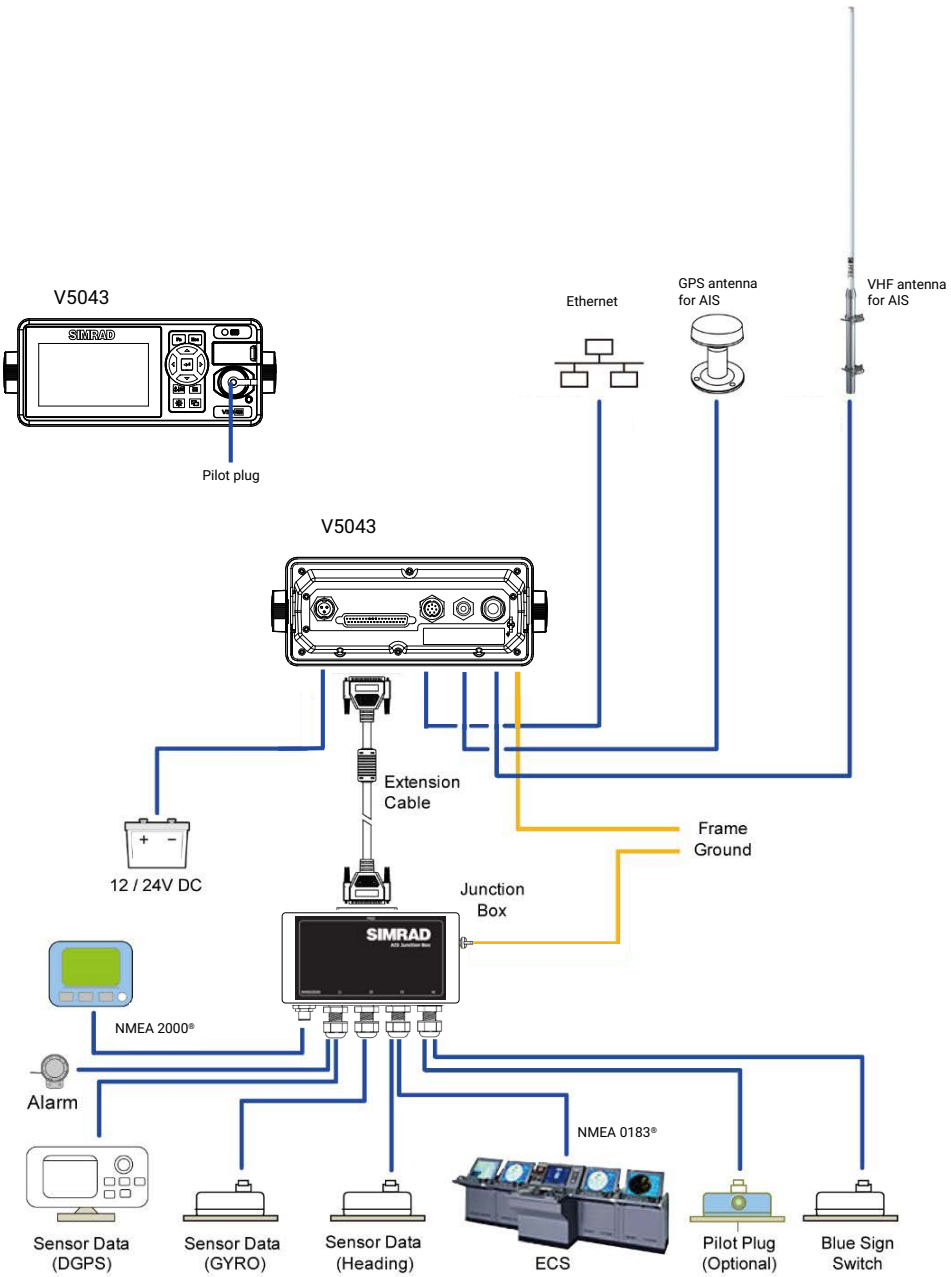

# INSTALLATION

## Equipment in the box

The standard package includes the following items. Please contact your local representative if an item is missing.

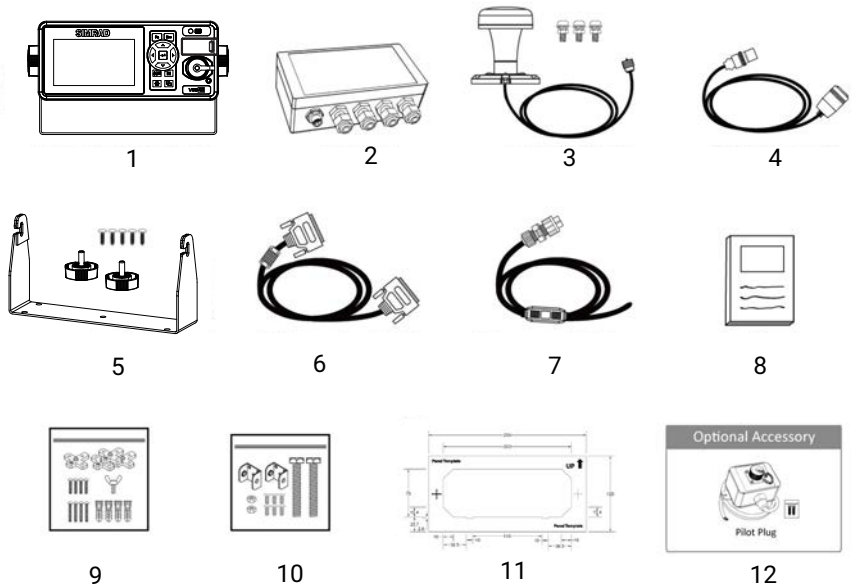


| Parts list | | | Part number |
|---|---|---|---|
| **1** | Class A AIS transceiver unit | x1 | 000-16280-001 |
| **2** | Junction box | x1 | 000-12324-001 |
| **3** | GPS antenna with 10 m cable | x1 | 000-12326-001 |
| **4** | 8-pin Ethernet cable (RJ45 female) | x1 | - |
| **5** | Gimbal mounting kit | x1 | - |
| **6** | 37-pin extension cable, 1.8 m | x1 | 000-12328-001 |
| **7** | 3-pin power cable, 1.5 m | x1 | 000-12329-001 |
| **8** | Installation manual<br>Operator manual | x1<br>x1 | 988-13175-001<br>988-13176-001 |
| **9** | Junction box mounting kit | x1 | - |
| **10** | Panel mount holder kit | x1 | - |
| **11** | Panel mount cutting template | x1 | - |
| **12** | Pilot plug (optional) | - | 000-12325-001, sold separately |

## Installation procedure

Familiarize yourself with the manual content before you begin installation. Use the following recommended steps for installation:

1. Mount the transceiver unit to a desired location.
2. Mount junction box.
3. Install VHF antenna (not included with the V5043).
4. Install GPS antenna.
5. Connect all external sensors and data interfaces to the junction box.
6. Connect all required cables to the main transceiver unit.
7. Power on the main transceiver unit.
8. Complete configuration settings.
9. Perform system functional test.

## RF cable requirements

The following radio frequency (RF) cable is recommended for installation of the VHF antenna (not supplied).

- VHF Antenna Cable
  Type: 5D-FB or equivalent
  Connector: PL-259 (Male)

A suitable cable and connector for the GPS antenna is supplied with the GPS antenna.

## GPS antenna installation

A GPS (GNSS) antenna and cable is supplied with the V5043.

- Install the GPS antenna in a position where it has a clear view of the sky. The aim is to see 360° around the horizon, with a clear vertical view from 5° above the horizon to 90° above the horizon.
- Mount the GPS antenna for AIS as far as possible from, and at least 3 m away from, any other high-power transmitting device.
- Ensure the GPS antenna is not positioned within the beam of any other transmitting device.

Enter the GPS antenna location data in **Ship setting** after the installation.

You should record the GPS antenna's location on the vessel in the maintenance records section **GPS (GNSS) antenna location** on page **62**.

## VHF antenna installation

AIS requires a VHF antenna (antenna and cable not included).

- Mount the VHF antenna as high as possible to allow a clear view of the horizon and the greatest possible line-of-sight.
- If the vessel has more than one VHF antenna, they should be mounted one above the other if possible, and separated vertically by a minimum of 2 m.
- The recommended minimum horizontal distance between two VHF antennas on the same horizontal plane is 10 m.
- Mount the VHF antenna for AIS as far as possible from, and at least 3 m away from, any other high-power transmitting device such as radar.
- Ensure the VHF antenna is not positioned within the beam of any other transmitting device.
- Mount the VHF antenna a minimum of 2 m (horizontally) from any structure made of conducting material.

## Example GPS and VHF antenna locations

The diagram below gives an example of the GPS and VHF antennas' locations on a vessel. Existing equipment or structures on a vessel may require the antennas to be positioned differently.

In all cases, for correct operation of the AIS, ensure the positions chosen for the GPS antenna and VHF antenna adhere to the guidelines in the sections **GPS antenna installation** and **VHF antenna installation** on page **10**. We advise following current best practice for installing any equipment on your vessel.

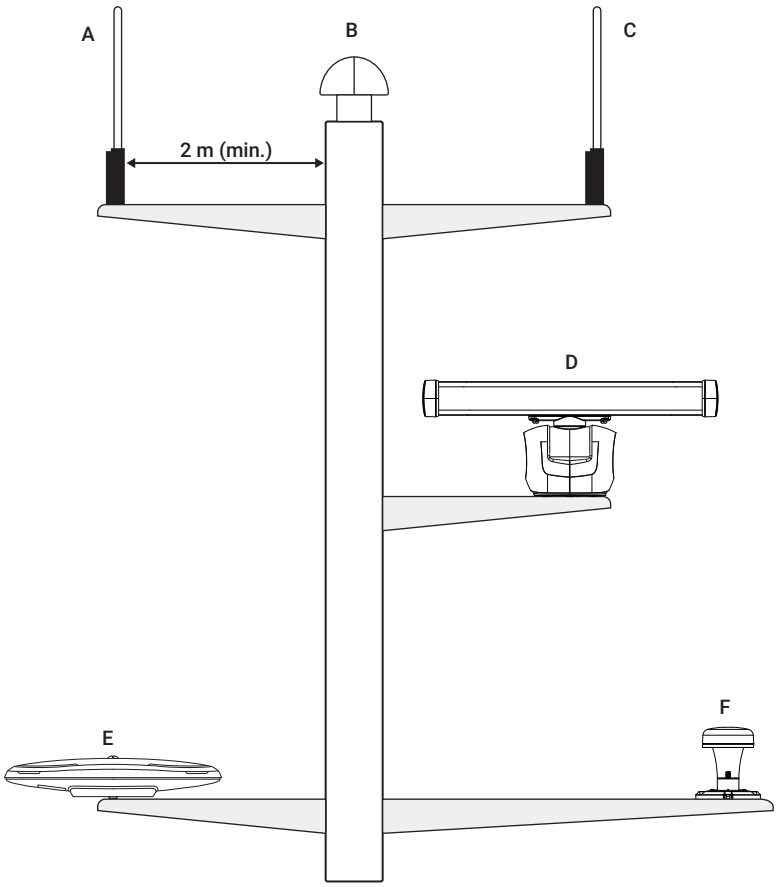


| | |
|---|---|
| **A** | VHF antenna for AIS |
| **B** | Mast, with navigation lights |
| **C** | VHF antenna |
| **D** | Radar (or other high-power transmitting device) |
| **E** | GPS heading sensor |
| **F** | GPS receiver for AIS |

## Mounting the V5043 transceiver main unit

Use the following guidelines to check the installation location for your AIS transceiver:

- The AIS transceiver should be mounted in a location that is accessible and readable to user at all time.
- The transceiver should be installed in a protected environment away from direct rain and water contact.
- The transceiver is designed to operate in an environmental tempurature of −25°C to +55°C temperature. Environments with excessive heat may cause damage to the transceiver.
- The transceiver should not be installed near flammable or hazardous environments.
- The AIS transceiver should be installed at least 0.5 m away from magnetic compasses.

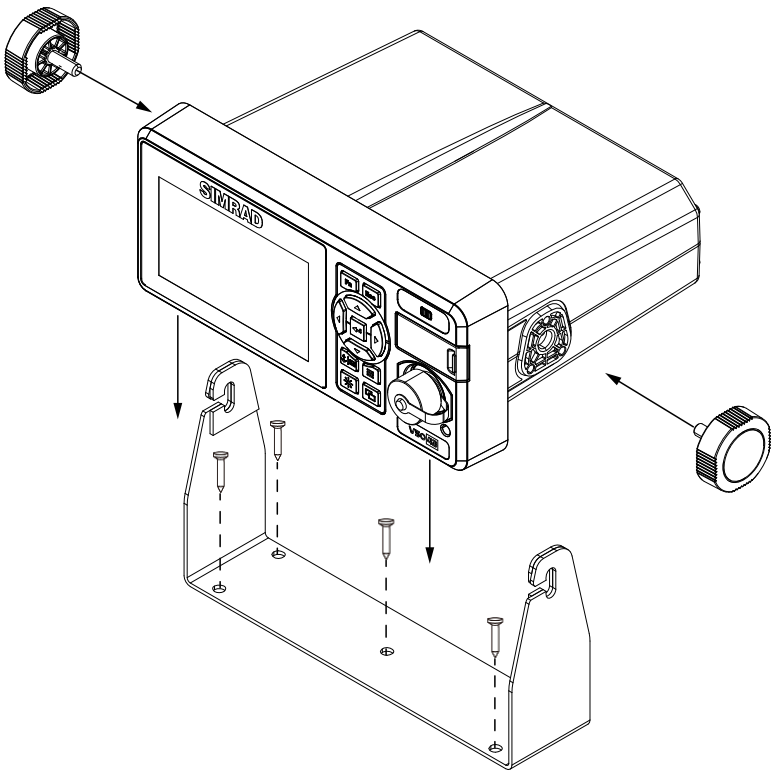

## Panel mounting

1 Line up the mounting template on control panel to sketch an outline for the cutting area.
2 Using a jigsaw, carefully cut along the sketched cutting area.
3 If necessary, clean up edge with glass paper or file.
4 Mount the transceiver through the opening.
5 Behind the panel, attach a mounting bracket to each side of the unit using the M3X6 screws.
→ ***Note:*** *The brackets are directional, so ensure the correct one is fitted to each side.*
6 Apply the mounting bracket screw on each side for a firm fix.

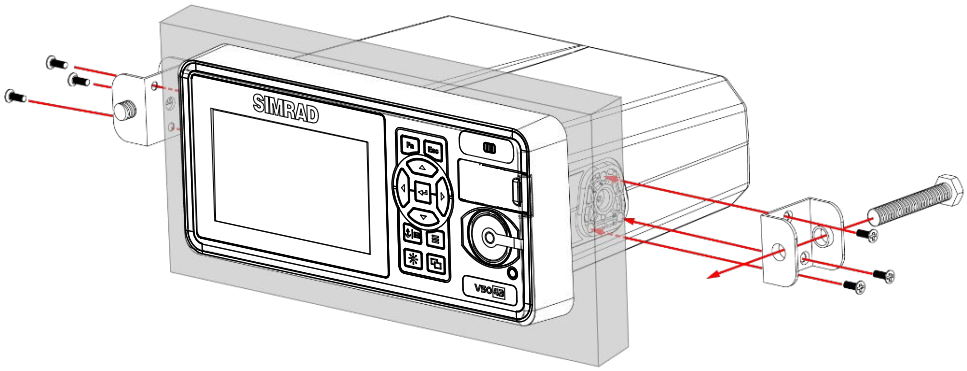


## Panel mounting (side view)

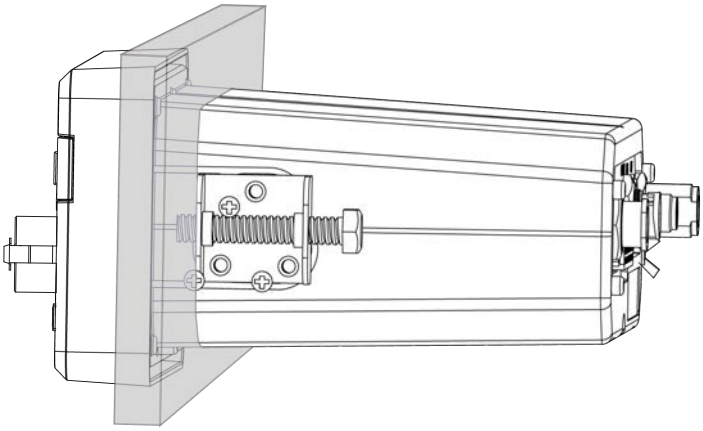

## External connectors (transceiver main unit)

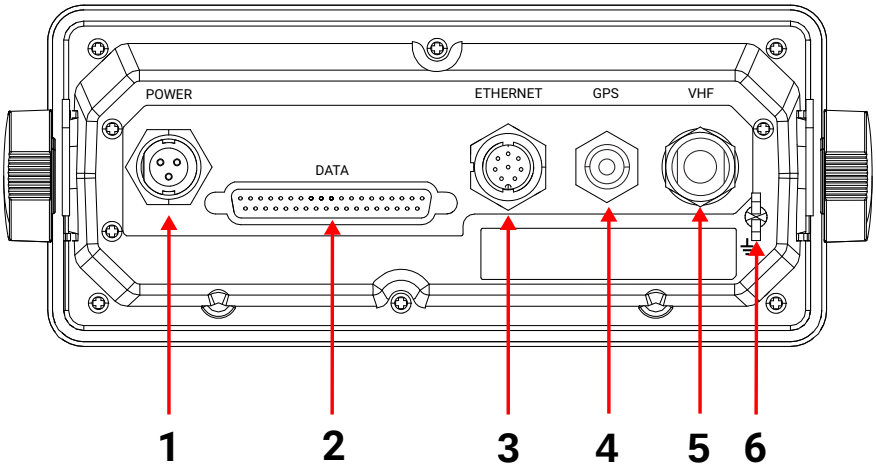


| | Name | Description | Type |
|---|---|---|---|
| 1 | **POWER** | Power input connector | Round type, 3 pins |
| 2 | **DATA** | Connect to junction box/<br>Connect to sensor or data ports | D-Sub 37 pins |
| 3 | **ETHERNET** | 10Base-T/100Base-TX | Round type, 8 pins |
| 4 | **GPS** | GPS antenna connector | TNC (female) |
| 5 | **VHF** | VHF antenna connector | SO-239 (female) |
| 6 | **Frame ground** | Connect to ship frame | |

## Vessel power supply requirement

Connect to the ship's power source, ideally an uninterrupted power supply (UPS), through a 2-pole switched supply with a fuse to allow isolation for servicing.

The power requirement is nominal 24 V DC (2 A minimum) or 12 V DC (4 A minimum).

For cable length 0–10 m, the minimum conductor area is 1.5 $mm^2$.

→ ***Note:*** *The Class A power supply requirement should comply with IMO guidelines for the class of vessel concerned. National authorities and classification societies may have their own power supply requirements; these should also be considered.*

→ ***Note:*** *Some boats require frame ground connection of all electronic devices on the ship frame.*

## Mounting the junction box

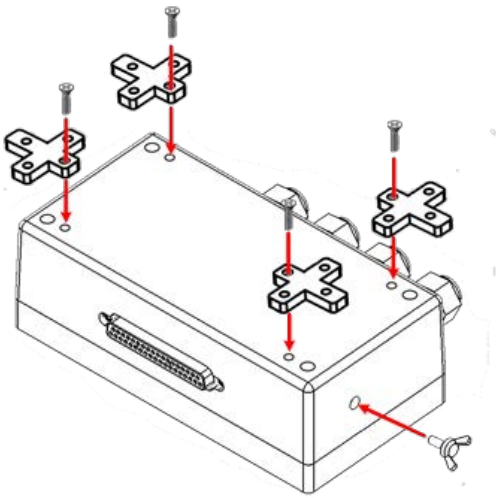

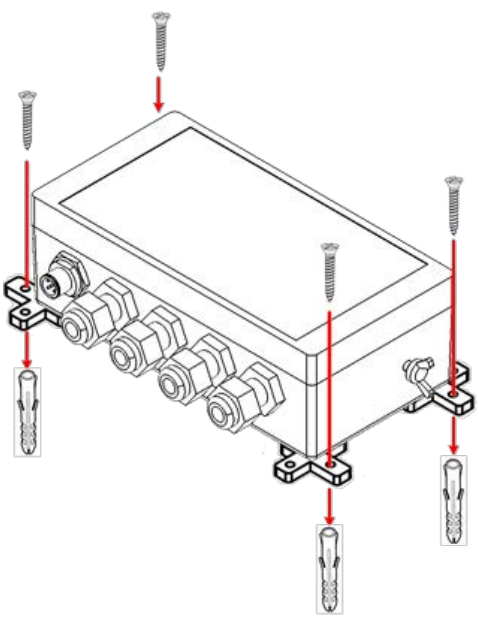

# Junction box connectors

Baud rate support: 115200, 57600, 38400, 19200, 14400, 9600, 4800.

## Junction box external connectors

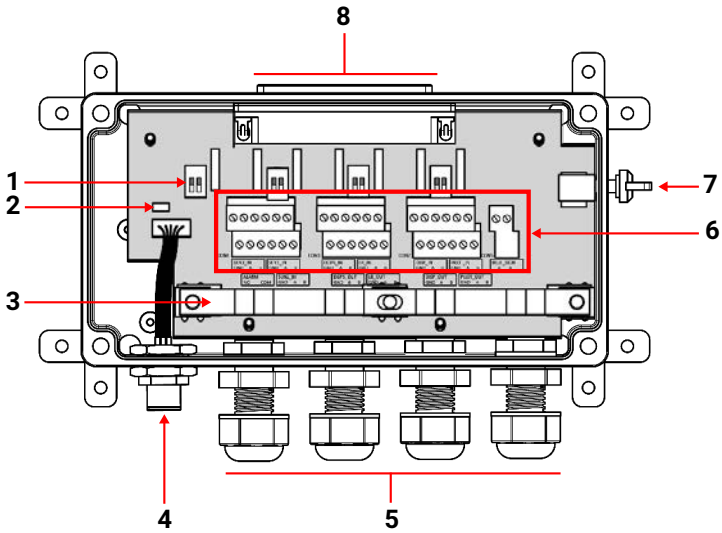


| | Function | | |
|---|---|---|---|
| 1 | Termination switches | The switches provide line termination configuration. | |
| | | Termination off 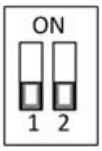  | Termination on |
| 2 | Jumper for NMEA 2000® shield and ground | The jumper's purpose is to wire together NMEA 2000® cable's shield and ground. Depending on your scenario, you may choose not to connect them together. | |
| 3 | Frame ground strip | | |
| 4 | NMEA 2000® | | |
| 5 | Cable glands | | |
| 6 | Connectors | | |
| 7 | Frame ground | | |

## Junction box connectors

→ *NOTE: A suitable wire gauge (single wire) for junction box connectors is AWG 26–16. See image of connector below.*

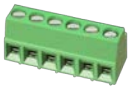

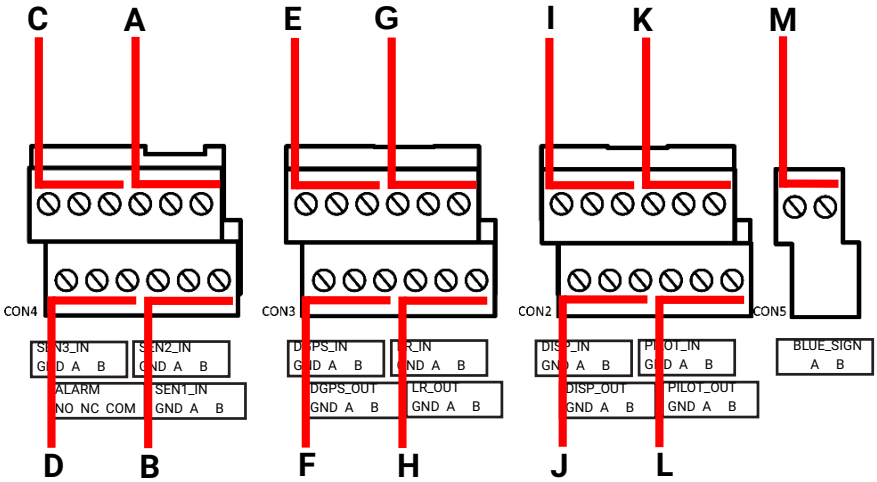


| | Connector | Label name | Description | Function |
|---|---|---|---|---|
| **A** | Sensor 1[1] | GND | Ground | Connect to data sources such as gyro, heading or other types of sensors. |
| | | SEN1_IN A | Sensor 1 input A | |
| | | SEN1_IN B | Sensor 1 input B | |
| **B** | Sensor 2[1] | GND | Ground | Connect to data sources such as gyro, heading or other types of sensors. |
| | | SEN2_IN A | Sensor 2 input A | |
| | | SEN2_IN B | Sensor 2 input B | |
| **C** | Sensor 3[1] | GND | Ground | Connect to data sources such as gyro, heading or other types of sensors. |
| | | SEN3_IN A | Sensor 3 input A | |
| | | SEN3_IN B | Sensor 3 input B | |
| **D** | Alarm | ALARM N.O. | Alarm normally open | |
| | | ALARM N.C. | Alarm normally closed | |
| | | ALARM COM | Alarm common | |

[1]The default baud rate is 4800.

| | Connector | Label name | Description | Function |
|---|---|---|---|---|
| **E** | DGPS input[2] | GND | Ground | DGPS sensor |
| | | DGPS_IN A | DGPS input A | |
| | | DGPS_IN B | DGPS input B | |
| **F** | DGPS output[2] | GND | Ground | DGPS sensor |
| | | DGPS_ OUT A | DGPS output A | |
| | | DGPS_ OUT B | DGPS output B | |
| **G** | LR input[2] | GND | Ground | Long range input |
| | | LR_IN A | LR input A | |
| | | LR_IN B | LR input B | |
| **H** | LR output[2] | GND | Ground | Long range output |
| | | LR_ OUT A | LR output A | |
| | | LR_ OUT B | LR output B | |
| **I** | Display[2] | GND | Ground | Connect to the data input of an external display system such as ECDIS. |
| | | DISP_IN A | DISP input A | |
| | | DISP_IN B | DISP input B | |
| **J** | | GND | Ground | Connect to the data input of an external display system such as ECDIS. |
| | | DISP_OUT A | DISP output A | |
| | | DISP_OUT B | DISP output B | |
| **K** | Pilot plug[2] | GND | Ground | Pilot plug port |
| | | PILOT_IN A | Input A | |
| | | PILOT_IN B | Input B | |
| **L** | | GND | Ground | |
| | | PILOT_OUT A | Output A | |
| | | PILOT_OUT B | Output B | |

[2]The default baud rate is 38400.

| | Connector | Label name | Description | Function |
|---|---|---|---|---|
| **M** | Blue sign | BLUE_SIGN A | | Connect to a blue sign switch. |
| | | BLUE_SIGN B | | |

## Connecting the transceiver to the junction box

Use the 37-pin-extension cable (1.8 m) provided in the package to connect the V5043 to the junction box.

→ ***Note:*** *The end of the extension cable with the EMI ferrite core should be connected at the V5043 main unit.*

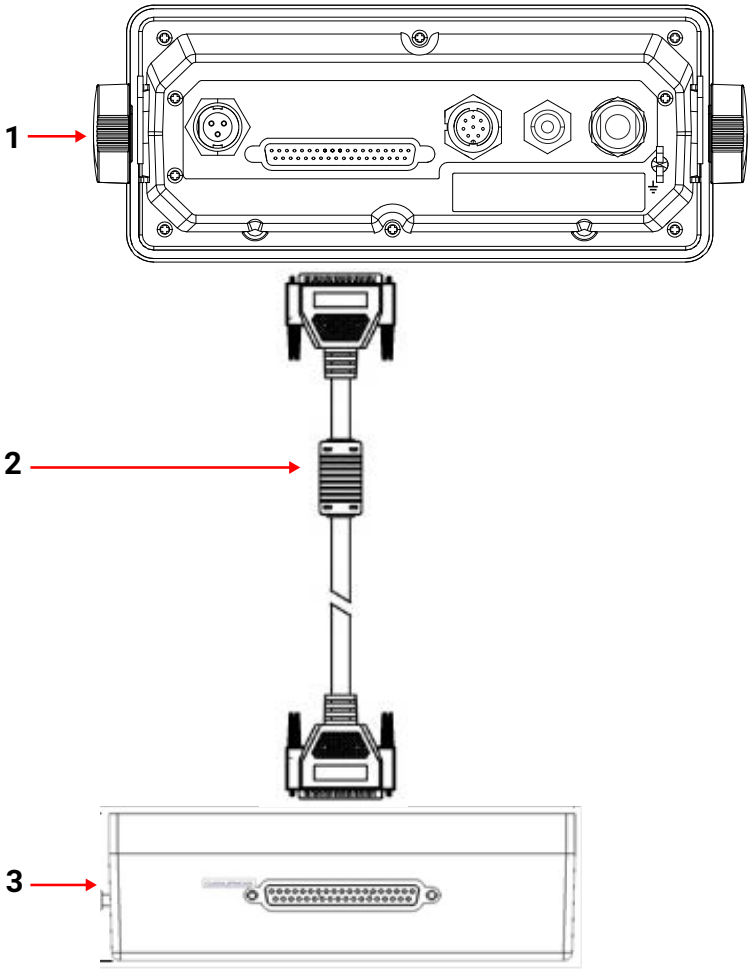


| | |
|---|---|
| 1 | V5043 unit |
| 2 | EMI ferrite core on 1.8 m extension cable |
| 3 | Junction box |

## Connecting to power supply

The V5043 requires a 12 V or 24 V DC power supply capable of supplying 4 A peak current. The red wire and the black wire on the 3-pin cable are used to connect the power supply's positive and negative terminals. A 4 A fuse or circuit breaker must be used in the connection between the power supply and the unit.

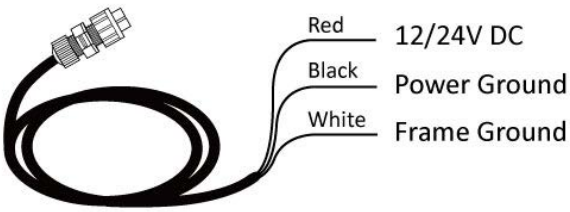


## Connecting the optional pilot plug

The V5043 has an integrated pilot plug on the front panel with the IMO-standard AMP connector. Open the waterproof lid to connect the PPU (Personal Pilot Unit). When needed, an optional pilot plug is available for purchase to be connected through the junction box.

It is recommended to keep the pilot plug lid closed when not in use.

| Pilot plug | Signal type |
|---|---|
| Pin 9 | RS-422 GND |
| Pin 1 | RS-422 TX-A |
| Pin 5 | RS-422 RX-A |
| Pin 4 | RS-422 TX-B |
| Pin 6 | RS-422 RX-B |

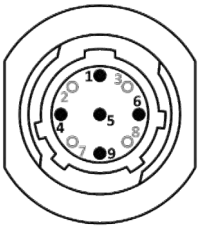

## Password

Certain information stored in the transceiver can only be changed with the password. The password is required to access the following chapters:

- Own ship: contains information about MMSI, vessel name, IMO, call sign and dimension.
- Long range settings –
- Long range broadcast –
- Transceiver: enables the option to activate/deactivate AIS transmission.
- I/O port settings: about baud rate configuration of sensors.

The **Password Setting** sub-menu enables users to change the password.

→ ***Note:*** *Default password: "000000"*

Use direction keys to select **Old Password, New Password** and then press ↵ to enter value. To save the settings, press **Save** button in the view and the system will ask whether the changes should be saved. Select **Yes** to save or **No** to discard and return to **System Configuration** sub-menu.

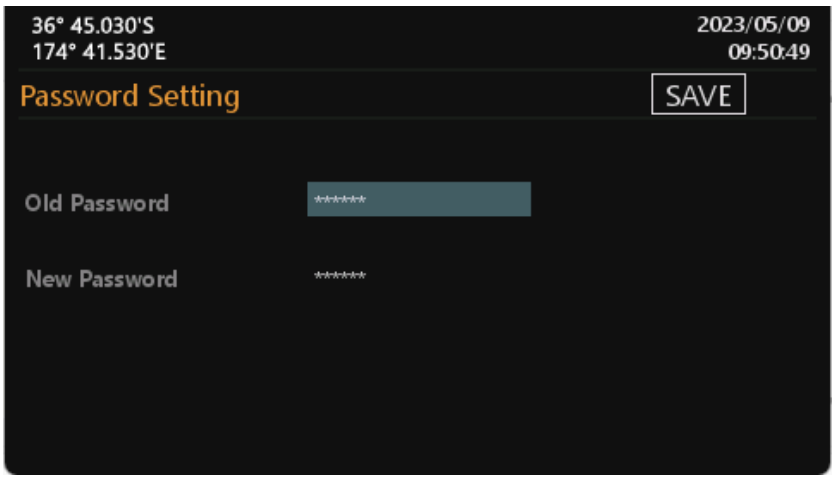

# PRODUCT SPECIFICATIONS

## Applicable standards

| | |
|---|---|
| IEC 61993-2 Ed.3.0, 2018 | IMO Resolution A.694(17) |
| IEC 61108-1 Ed.2.0, 2003 | IMO Resolution MSC.74(69) Annex 3 |
| IEC 60945 Ed.4.0, 2002 incl. Corr. 1, 2008 | IMO Resolution MSC.191(79) |
| IEC 61162-1 Ed.5.0, 2016 | IMO Resolution MSC.302(87) |
| IEC 61162-2 Ed.1.0, 1998 | ITU-R M.1371-5 (Class A), 2014 |
| IEC 61162-450 Ed.2.0, 2018 | IEC 62288 Ed.3.0, 2021 |
| IEC 62923-1 Ed. 1.0, 2018 | IEC 62923-2 Ed. 1.0, 2018 |
| CESNI Inland AIS test standard Ed. 2021/3.0 | |

## VHF transceiver

| | |
|---|---|
| Frequency range | 156.025 MHz–162.025 MHz |
| Channel bandwidth | 25 kHz |
| Modulation | GMSK / FM |
| Data rate | 9,600 bps |
| Number of AIS transmitter | 1 |
| Number of AIS receiver | 2 |
| Number of DSC receiver | 1 |
| AIS Channel 1 | CH 87B (161.975 MHz) |
| AIS Channel 2 | CH 88B (162.025 MHz) |
| Tx power output | 1/12.5 W (30/41 dBm ± 1.5 dB) |
| Rx sensitivity | < −110 dBm @ 20% PER |

## DSC receiver

| | |
|---|---|
| Frequency | 156.525 MHz |
| Modulation | FSK |
| Channel bandwidth | 25K |
| Sensitivity | < −112 dBm @ BER < $10^{-2}$ |
| Spurious response rejection | ≥ 70 dB for signal @ −104 dBm; BER ≤ 1 % |
| Blocking | ≥ 84 dB for signal @ −104 dBm; BER ≤ 1 % |

## GPS (GNSS) receiver (internal)

| | |
|---|---|
| Receiver type | 72-channel;<br>GPS, GLONASS, BeiDou, Galileo,<br>SBAS: WASS, EGNOS, MSAS, GAGAN |
| Accuracy | Position: 2.5 m CEP<br>SBAS: 2.0 m CEP |
| Sensitivity | Default mode: GPS & GLONASS<br>Tracking and Navigation: −164 dBm<br>Reacquisition: −160 dBm |

## GPS (GNSS) antenna

| | |
|---|---|
| Cable type | RG58A/U or equivalent |
| Cable length | 10 m |
| Connector | TNC (male) |

## Power supply

| | |
|---|---|
| Supply voltage | 12 V DC or 24 V DC |
| Supply voltage range | 9.6 V DC–31.2 V DC |
| Peak current draw | 3.50 A @ 12 V DC;<br>1.72 A @ 24 V DC |

## LCD display

| | |
|---|---|
| Screen size | 4.3” color TFT |
| Pixel number (resolution) | 480x272 |
| Dimmer control | Change brightness manually or automatically |
| Nominal viewing distance | 0.52 m |

## Keypad

| | |
|---|---|
| 11 keys with backlight | Function, escape, voyage/SRM, menu, screen brightness, display, enter, 4 arrow keys |

## Connection interface

| | |
|---|---|
| **V5043 main unit front panel** | |
| USB | Mini type-B USB interface |
| SD® card slot | MicroSD® type |
| Pilot plug | 206486-2 |
| **V5043 main unit rear panel** | |
| Power connector | Round type, 3 pins |
| GPS antenna connector | TNC (female) |
| VHF antenna connector | SO-239 (female) |
| Ethernet | Compliance with IEEE 802.3u, 10Base-T/100Base-TX |
| Data | 37-pins, connect to junction box via extension cable |
| **Junction box connectors [*Baud rate support: 38400 (default), 9600, 4800.]** | |
| Sensor interfaces 1 to 3* | IEC 61162-1 or -2 |
| Pilot/auxiliary* | IEC 61162-2 |
| External display* | IEC 61162-2 |
| Long range* | IEC 61162-2 |
| DGNSS correction input* | RTCM-SC-104 |
| *Baud rate support: 38400 (default), 9600, 4800. | |
| Alarm relay | Normally closed |
| NMEA 2000® | IEC61162-3 |
| Alarm output | Relay contact |
| Blue sign switch | Connect to external blue sign switch |

## Environmental

| | |
|---|---|
| Operating conditions | IEC 60945 “protected” category |
| Operating temperature | −25°C to +55°C |
| Operating humidity | 93% RH at 40°C |
| Waterproof | IP54 |

## Physical

| | |
|---|---|
| Width | 238 mm (9.37″) |
| Height | 135 mm (5.32″) |
| Depth (including connectors) | 192.6 mm (7.58″) |
| Weight (main unit) | 1.25 kg |

## Pilot Plug (optional)

| | |
|---|---|
| Cable length | 2 m |
| Connector type | 206486-2 |

# MECHANICAL DIMENSIONS

## Transceiver main unit

### Front (width: 238.14 mm, 9.37 in)

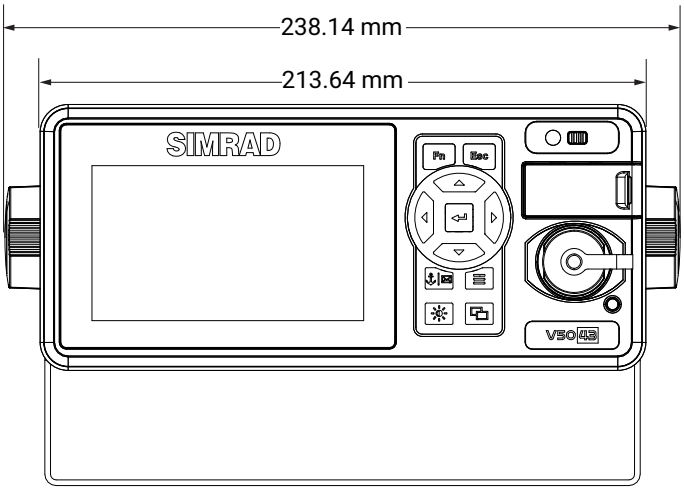


### Side (height: 135 mm, 5.32 in)

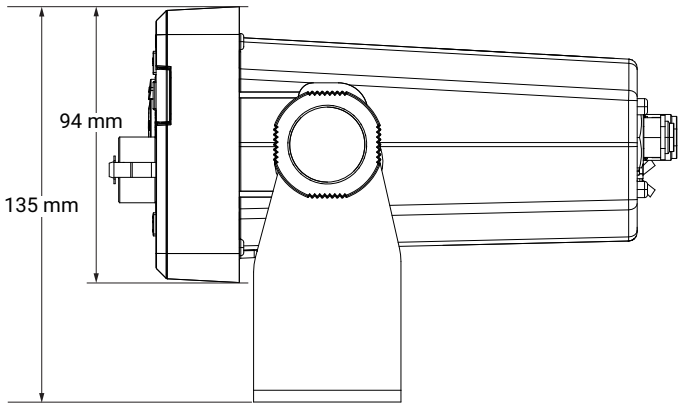

**Back (width: 238 mm, 9.37 in)**

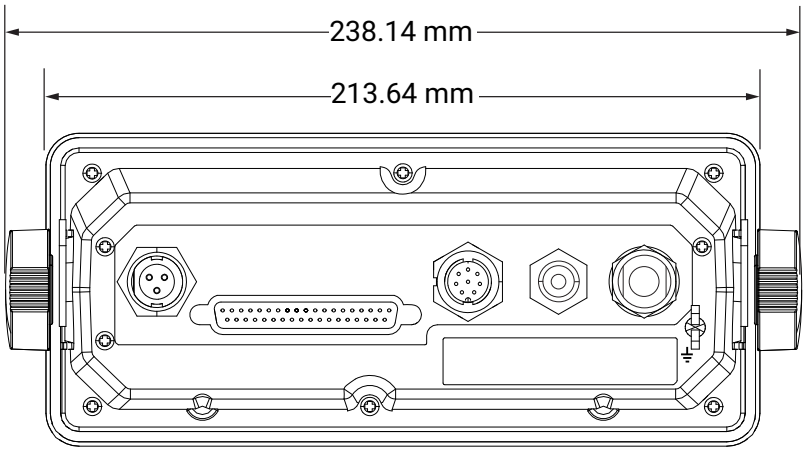


**Bottom (depth: 192.6 mm, 7.58 in)**

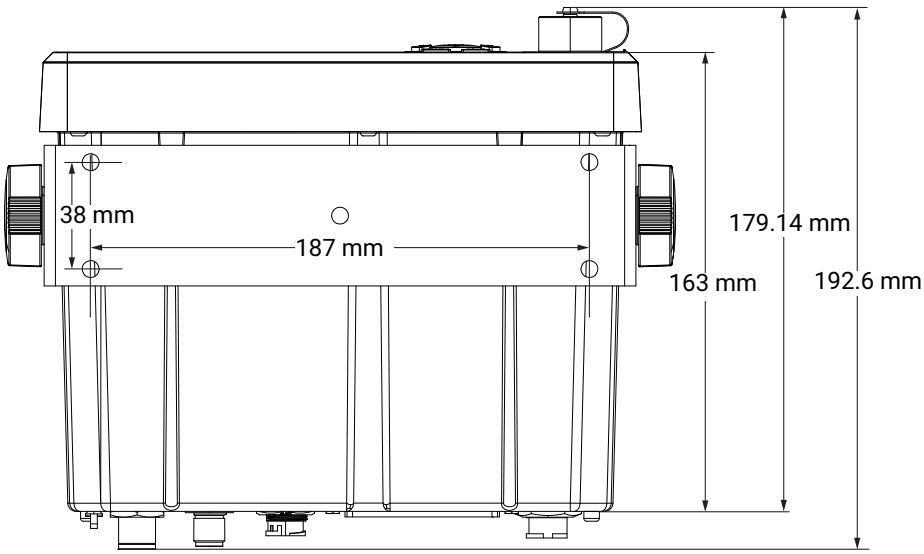

## Junction box

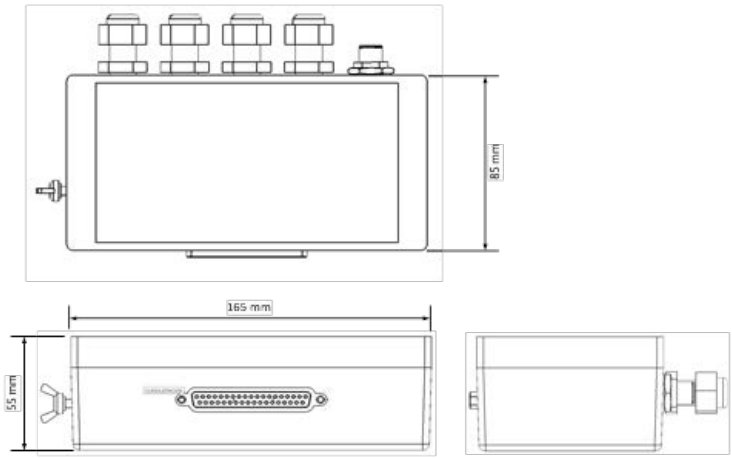


## Extension cable

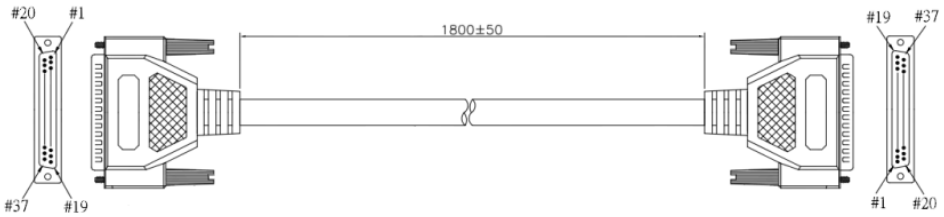


## Ethernet cable

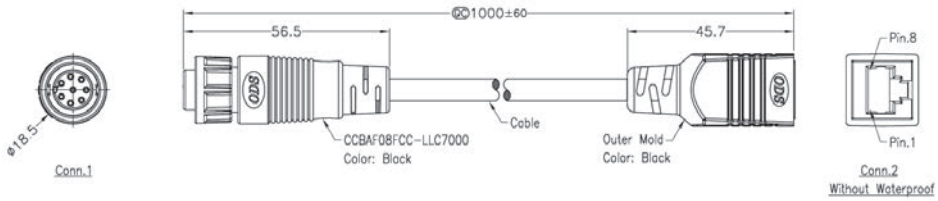

## Mounting template (V5043, not to scale)

UNIT: mm

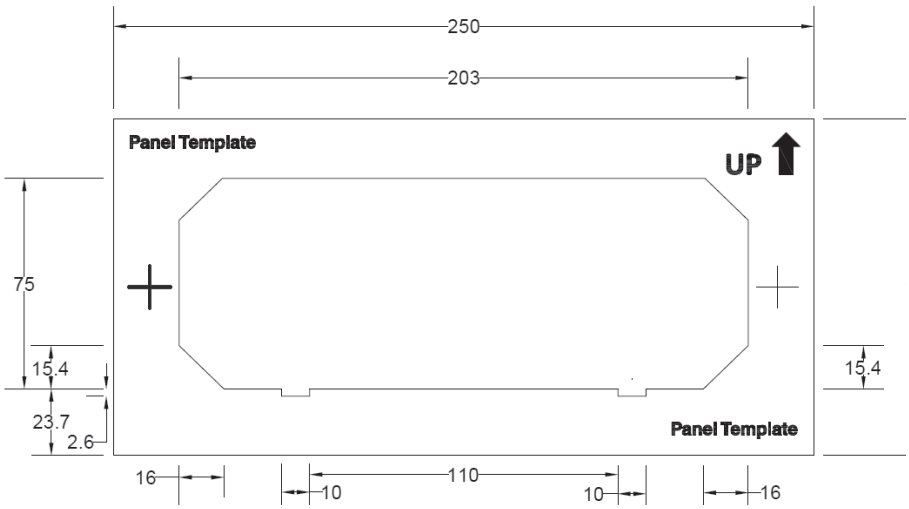


## GPS antenna

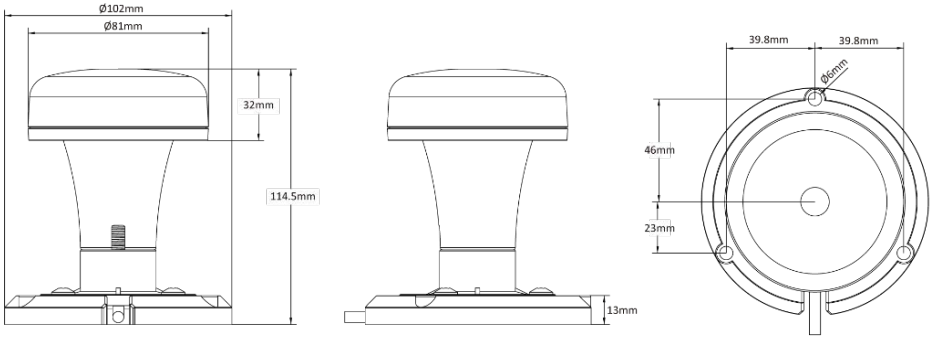

## Pilot plug (optional)

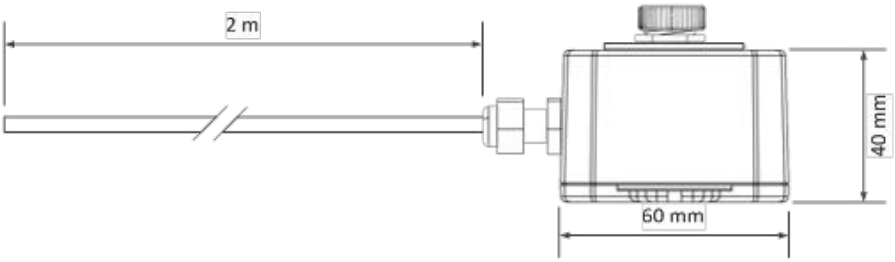


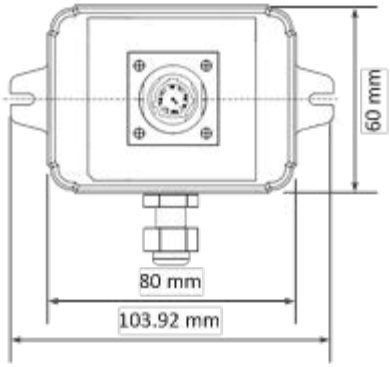

# TROUBLESHOOTING

Use the following guide to perform simple troubleshooting in case the transceiver does not function as it is expected. Due to the complexity of the operation environment of marine electronics, we recommend minimizing sources of interference before proceeding with the troubleshooting by:

- Disconnecting other NMEA® equipment such as ECDIS, heading, gyro, etc from the AIS transceiver.
- Switching off other emission sources such as radar or VHF radio.

| Symptom | Possible cause and remedy |
|---|---|
| The transceiver will not power on | • Check that the voltage of the power supply has 12 V or 24 V.<br>• Check that the polarity is not switched.<br>• Check that the available current is sufficient for start-up.<br>• Check that the power connector is correctly connected and secured.<br>• Increase dimmer level of the display. |
| No GPS position fix | • Check for failed GPS antenna, damaged antenna cable and connectors<br>• When the transceiver's internal GPS does not have a position fix, the time and date appearing in the upper right corner of the display will not be correct.<br>• Check the GNSS status to see the received satellites and their noise ratio. |
| No AIS transmission | • Make sure that MMSI number is correctly configured.<br>• Make sure that silent mode is switched off.<br>• Check that the available current is sufficient for transmission.<br>• Check if the transceiver might be operating in a regional area set with different operating mode. |
| AIS range seems too low | • Check VHF antenna and cable installation<br>• Make sure the transceiver is not operating in low power (1 W) mode. |
| No AIS targets on radar view and target list | • Check if VHF antenna, cabling and connector installations are damaged. |
| Sensor or data ports not response | • Check that wiring polarity is not switched<br>• Check that the transceiver and the connected sensor have the same baud rate |

## Troubleshooting alarm messages

The V5043 is monitoring itself constantly for failures or other important parameters with the built-in integrity test (BIIT). If abnormal operation is detected in one or more of the following conditions, an alert will be triggered and displayed on the screen, and the transceiver will react as described in the following table.

| Description text | BIIT ID | Reaction of the system (transceiver) |
|---|---|---|
| **AIS: Tx malfunction**<br>The V5043 has a built-in lock detector (high active) to monitor the local o scillator (PLL circuit) of the transmitter. If the operation of PLL circuit becomes abnormal, a logic low (Tx malfunction) will be sent from the lock detector to notify the system. At the same time, system will output an BIIT ID 001 alert at the related PI port. | 001 | Stop transmission |
| **AIS: Antenna VSWR exceeds limit**<br>The V5043 has a built-in RF output power detector to monitor the VSWR (Voltage Standing Wave Ratio) of the VHF antenna port. If the antenna VSWR exceeds a given limit, an alarm will be generated. If the VSWR goes below the defined threshold, the alarm is cleared. | 002 | Continue operation |
| **AIS: Rx channel 1 malfunction**<br>The V5043 has 3 built-in lock detectors (high active) to monitor each local oscillator (PLL circuit) of receiver channel 1, channel 2, and channel 70 respectively.<br>If the operation of PLL circuit becomes abnormal, a logic low level will be sent from the lock detector to notify the system.<br>At the same time, the system will output BIIT ID 003, BIIT ID 004 or BIIT ID 005 alert to indicate the CH1 or CH2 or CH70 RX malfunction respectively. | 003 | Stop transmission on affected channel |
| **AIS: Rx channel 2 malfunction** | 004 | Stop transmission on affected channel |
| **AIS: Rx channel 70 malfunction** | 005 | Continue operation |
| **AIS: general failure** | 006 | Stop transmission |
| **AIS: UTC sync invalid**<br>This alarm is triggered when the transceiver lost UTC direct synchronization or cannot synchronize from the internal GPS receiver. | 007 | Continue operation using indirect or semaphore synchronization |
| **AIS: MKD connection lost**<br>This alarm is active if the communication between the control unit and the display in the transceiver does not work. | 008 | Continue operation |

| Description text | BIIT ID | Reaction of the system (transceiver) |
|---|---|---|
| **AIS: internal/external GNSS position mismatch**<br>This alarm is active if the difference between the internal and external GNSS position is more than 100 m for more than 1 hour. | 009 | Continue operation |
| **AIS: NavStatus incorrect**<br>For example, if the navigational status is set to “At Anchor” but the ship is moving faster than 3 knots, this alarm will become active. | 010 | Continue operation |
| **Heading sensor offset**<br>This alarm is active when SOG is greater than 5kn and the difference between COG and HDT is greater than 45° for 5 min. | 011 | Continue operation |
| **AIS: active AIS SART**<br>This alarm is active when the transceiver receives an AIS SART position report. | 014 | Continue operation |
| **AIS: external EPFS lost**<br>This alarm is active if the position from the external Electronic Position Fixing System is invalid. | 025 | Continue operation |
| **AIS: no sensor position in use**<br>This alarm is active if there is no valid position from any sensor is available. | 026 | Continue operation |
| **AIS: no valid SOG information**<br>This alarm is active if the transceiver does not have a valid SOG from any sensor | 029 | Continue operation using default data |
| **AIS: no valid COG information**<br>This alarm is active if the transceiver does not have a valid COG from any sensor | 030 | Continue operation using default data |
| **AIS: Heading lost/invalid**<br>This alarm is active if either the heading info from external sensor is lost or if the heading is undefined. | 032 | Continue operation using default data |
| **AIS: no valid ROT information**<br>This alarm is active if ROT is undefined or if no valid ROT info is available. | 035 | Continue operation using default data |

# APPENDIX A: DATA INTERFACE TECHNICAL INFORMATION

## AIS interface overview

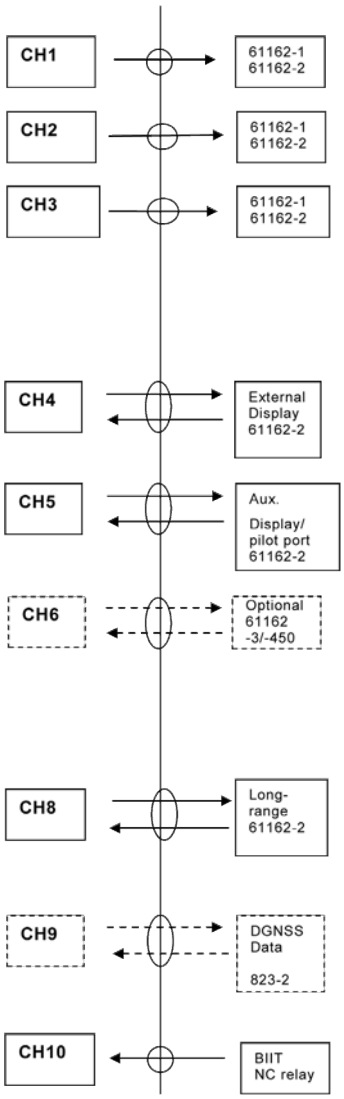

# Data interface (IEC 61162-2)

The V5043 Class A AIS transceiver provides two types of IEC 61162-2 data interface for user applications. The first type of interface includes three input-only sensor data ports, and the second type of interface includes four bidirectional input/output ports.

## Sensor data input ports

The schematic for an input-only sensor data port is shown below (**Schematic of a sensor data input port**).

The schematic shows an isolated half duplex RS-485 transceiver IC which is used as the main component to receive external data. The transceiver IC is isolated from external input.

To avoid signal reflection, the transceiver IC has an optional built-in 120 Ω loop termination, which is selected using the dip-switch on the junction box. The switch should be set to ON when connecting an external data source with a long cable.

All sensor data-input ports are isolated from one another and are also isolated from the internal power supply. The input impedance on A/B wires is greater than 12 kΩ, and the levels on the A/B wires are defined as follows:

- Logic low input: A-B < −0.2 V
- Logic high input: A-B > −0.02 V

### Schematic of a sensor data input port

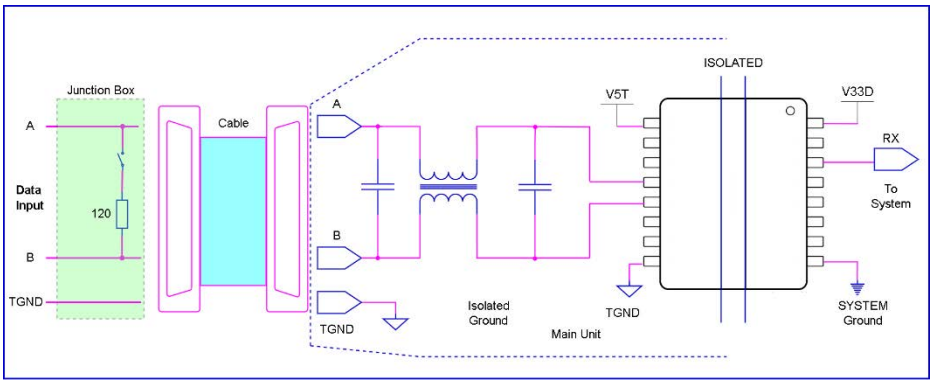

## Bidirectional data ports

The schematic for a bidirectional data port is shown below (**Schematic of a bidirectional data port)**.

The schematic includes an isolated full duplex RS-485 transceiver IC which is used as the main component to handle both data input and output from external data source. The transceiver IC is isolated from external input.

To avoid signal reflection, the transceiver IC has an optional built-in 120 Ω loop termination, which is selected using the dip-switch on the junction box. The switch should be set to ON when connecting an external data source with a long cable. All bidirectional data ports are isolated from one another and are also isolated from the internal power supply. The transceiver internal power supply is fully isolated from the external power supply.

The output driver capability of a bidirectional data port can provide a maximum of 60 mA, and the minimum differential output swing under 100 Ω load can be 2.3 V.

### Schematic of a bidirectional data port

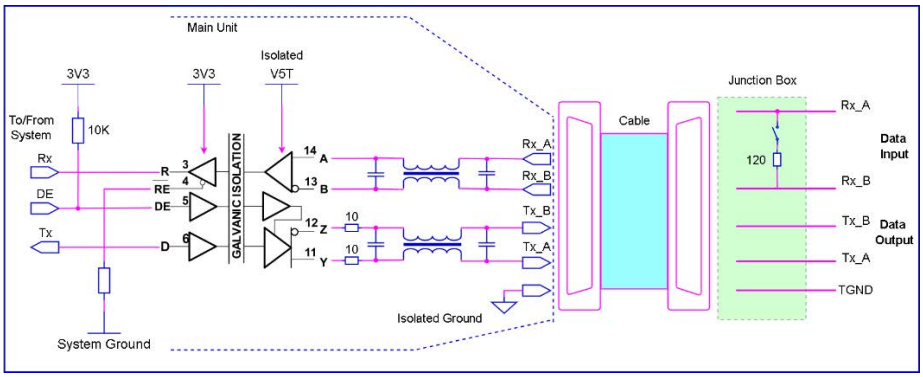


## A and B signal lines

Refer to **Sensor data input ports** on page **35**, and **Bidirectional data ports** on page **36**.

## Input load

Refer to **Sensor data input ports** on page **35**, and **Bidirectional data ports** on page **36**.

## Hardware input/output circuit

Refer to **Sensor data input ports** on page **35**, and **Bidirectional data ports** on page **36**.

## Supported data sentences (IEC 61162)

| Data Port | Input Sentences | Output Sentences |
|---|---|---|
| Sensor 1<br>Sensor 2<br>Sensor 3<br>DGPS | DTM, GBS, GGA, GLL, GNS, GSA, GSV, HDT, RMC, ROT, THS, VBW, VHW, VTG | N/A |
| External display pilot | ABM, ACA, ACN, ACK, AIQ, AIR, BBM, EPV, LRF, LRI, SSA, SSD, VSD | ABK, ACA, ACS, ALC, ALF, ALR, ARC, LR1, LR2, LR3, LRF, NAK, TXT, VDM, VDO, VER<br>For query (AIQ):<br>ACA, EPV, SSD, TRL, TXT, VER, VSD |
| Long range | LRF, LRI | LR1, LR2, LR3, LRF |

### Sentence output interval

| Sentence | Interval |
|---|---|
| VDO | Once per second |
| ALR, ALC, ALF (active) | Once every 30 s |
| ALR (inactive) | Once every 60 s |

## Interpretation of input sentences

### ABM: AIS addressed binary and safety related message

This sentence supports ITU-R M.1371 Messages 6, 12, 25, 26 and provides an external application with a means to exchange data via an AIS transceiver.

| !--ABM,x,x,x,xxxxxxxxxx,x,xx,s--s,x*hh<CR><LF> | | | |
|---|---|---|---|
| **Field No.** | **Format** | **Description** | **Remark** |
| 1 | x | Total number of sentences needed to transfer the message | |
| 2 | x | Sentence number | |
| 3 | x | Sequential message identifier | |
| 4 | xxxxxxxxx | The MMSI of the destination AIS unit for the ITU-R M.1371 message | |
| 5 | x | AIS channel for broadcast of the radio message | |
| 6 | xx | ITU-R M.1371 message ID | |
| 7 | s--s | Encapsulated data | |
| 8 | x | Number of fill-bits | |

## ACA – AIS Channel assignment message

An AIS device can receive regional channel management information.

| $--ACA,x,llll.ll,a,yyyyy.yy,a,llll.ll,a,yyyyy.yy,a,x,xxxx,x,xxxx,x,x,x,a,x,hhmmss.ss*hh<CR><LF> | | | |
|---|---|---|---|
| **Field No.** | **Format** | **Description** | **Remark** |
| 1 | x | Sequence Number | |
| 2 | llll.ll,a | Region northeast corner latitude – N/S | |
| 3 | yyyyy.yy,a | Region northeast corner longitude – E/W | |
| 4 | llll.ll,a | Region southwest corner latitude – N/S | |
| 5 | yyyyy.yy,a | Region southwest corner longitude – E/W | |
| 6 | x | Transition zone size | |
| 7 | xxxx | Channel A | |
| 8 | x | Channel A bandwidth | |
| 9 | xxxx | Channel B | |
| 10 | x | Channel B bandwidth | |
| 11 | x | Tx/Rx mode control | |
| 12 | x | Power level control | |
| 13 | a | Information source | |
| 14 | x | In-use flag | |
| 15 | hhmmss.ss | Time of “in use” change | |

## ACK – Acknowledge alarm

This sentence is used to acknowledge an alarm condition reported by a device.

| $--ACK,xxx*hh<CR><LF> | | | |
|---|---|---|---|
| **Field No.** | **Format** | **Description** | **Remark** |
| 1 | xxx | Unique alarm number (identifier) at alarm source | |

## AIQ - Query sentence

This sentence is used to inquire AIS sentence information.

| $--AIQ,c--c*hh<CR><LF> | | | |
|---|---|---|---|
| **Field No.** | **Format** | **Description** | **Remark** |
| 1 | c--c | Support query sentence of ACA, EPV, SSD, TRL, TXT, VER, VSD | |

## AIR – AIS interrogation request

This sentence supports ITU-R M.1371 messages 15 and 10. It provides an external application with the means to initiate requests for specific ITU-R M.1371 messages from AIS unit.

| $--AIR,xxxxxxxxx,x.x,x,x.x,x,xxxxxxxxx,x.x,x*hh<CR><LF> | | | |
|---|---|---|---|
| **Field No.** | **Format** | **Description** | **Remark** |
| 1 | xxxxxxxxx | MMSI of interrogated station 1 | |
| 2 | x.x | ITU-R M.1371 message requested from station-1 | |
| 3 | x | Message sub-section | ignored |
| 4 | x.x | Number of second message requested from station-1 | |
| 5 | x | Message sub-section | ignored |
| 6 | xxxxxxxxx | MMSI of interrogated station-2 | |
| 7 | x.x | Number of messages requested from station-2 | |
| 8 | x | Message sub-section | ignored |

## BBM – AIS broadcast binary message

This sentence supports generation of ITU-R M.1371 binary messages 8, 14, 25, and 26. This provides the application with a means to broadcast data, as defined by the application only.

| !--BBM,x,x,x,x,x.x,s--s,x*hh<CR><LF> | | | |
|---|---|---|---|
| **Field No.** | **Format** | **Description** | **Remark** |
| 1 | x | Total number of sentences needed to transfer the message | |
| 2 | x | Sentence number | |
| 3 | x | Sequential message identifier | |
| 4 | x | AIS channel for broadcast of the radio message | |
| 5 | x.x | ITU-R M.1371 Message ID | |
| 6 | s--s | Encapsulated data | |
| 7 | x | Number of fill-bits | |

## DTM – Datum reference

Local geodetic datum and datum offsets from a reference datum.

| $--DTM,ccc,a,x.x,a,x.x,a, x.x,ccc*hh<CR><LF> | | | |
|---|---|---|---|
| **Field No.** | **Format** | **Description** | **Remark** |
| 1 | ccc | Local datum | |
| 2 | a | Local datum subdivision code | ignored |
| 3 | x.x, a | Lat offset, min, N/S | ignored |
| 4 | x.x, a | Lon offset, min, E/W | ignored |
| 5 | x.x | Altitude offset, m | ignored |
| 6 | ccc | Reference datum | |

## EPV – Command or report equipment property value

| $--EPV,a,cc,c--c,x.x,c--c*hh<CR><LF> | | | |
|---|---|---|---|
| **Field No.** | **Format** | **Description** | **Remark** |
| 1 | a | Sentence status flag | |
| 2 | cc | Destination equipment type | |
| 3 | c--c | Unique identifier | |
| 4 | x.x | Property identifier | |
| 5 | c--c | Value of property to be set | |

## GBS – GNSS satellite fault detection

This sentence is used to support receiver autonomous integrity monitoring (RAIM).

| $--GBS, hhmmss.ss, x.x, x.x, x.x, xx, x.x, x.x, x.x *hh <CR><LF> | | | |
|---|---|---|---|
| **Field No.** | **Format** | **Description** | **Remark** |
| 1 | hhmmss.ss | UTC time of the GGA or GNS fix associated with this sentence | |
| 2 | x.x | Expected error in latitude | |
| 3 | x.x | Expected error in longitude | |
| 4 | x.x | Expected error in altitude | ignored |
| 5 | xx | ID number of most likely failed satellite | ignored |
| 6 | x.x | Probability of missed detection for most likely failed satellite | ignored |
| 7 | x.x | Estimate of bias on most likely failed satellite | ignored |
| 8 | x.x | Standard deviation of bias estimate | ignored |

## GGA – Global positioning system (GPS) fix data

Time, position and fix-related data for a GPS receiver.

| $--GGA, hhmmss.ss, llll.ll, a, yyyyy.yy, a, x, xx, x.x, x.x, M, x.x, M, x.x, xxxx*hh<CR><LF> | | | |
|---|---|---|---|
| **Field No.** | **Format** | **Description** | **Remark** |
| 1 | hhmmss.ss | UTC of position | |
| 2 | llll.ll,a | Latitude N/S | |
| 3 | yyyyy.yy,a | Longitude E/W | |
| 4 | x | GPS quality indicator | ignored |
| 5 | xx | Number of satellites in use, 00–12, may be different from the number in view | ignored |
| 6 | x.x | Horizontal dilution of precision | ignored |
| 7 | x.x | Antenna altitude above/below mean sea level (geoid) | ignored |
| 8 | M | Units of antenna altitude, m | ignored |
| 9 | x.x | Geoidal separation | ignored |
| 10 | M | Units of geoidal separation, m | ignored |
| 11 | x.x | Age of differential GPS data | ignored |
| 12 | xxxx | Differential reference station ID, 0000-1023 | ignored |

## GLL – geographic position – latitude/longitude

Latitude and longitude of vessel position, time of position fix and status.

| $--GLL, llll.ll, a, yyyyy.yy, a, hhmmss.ss, A, a *hh<CR><LF> | | | |
|---|---|---|---|
| **Field No.** | **Format** | **Description** | **Remark** |
| 1 | llll.ll, a | Latitude, N/S | |
| 2 | yyyyy.yy, a | Longitude, E/W | |
| 3 | hhmmss.ss | UTC of position | |
| 4 | A | Status, A = data valid<br>V = data invalid | |
| 5 | a | Mode indicator | |

## GNS – GNSS fix data

Fix data for single or combined satellite navigation systems (GNSS). This sentence provides fix data for GPS, GLONASS, possible future satellite systems and systems combining these.

| $-- GNS, hhmmss.ss, llll.ll, a, yyyyy.yy, a, c--c,xx,x.x,x.x,x.x,x.x,x.x,a *hh<CR><LF> | | | |
|---|---|---|---|
| **Field No.** | **Format** | **Description** | **Remark** |
| 1 | hhmmss.ss | UTC of position | |
| 2 | llll.ll, a | Latitude, N/S | |
| 3 | yyyyy.yy, a | Longitude, E/W | |
| 4 | c--c | Mode indicator | |
| 5 | xx | Total number of satellites in use | ignored |
| 6 | x.x | HDOP | ignored |
| 7 | x.x | Antenna altitude, m, re:mean-sea-level (geoid) | ignored |
| 8 | x.x | Geoidal separation, m | ignored |
| 9 | x.x | Age of differential data | ignored |
| 10 | x.x | Differential reference station ID | ignored |
| 11 | a | Nacigational status indicator | |

## GSA – GNSS DOP and active satellites

GNSS receiver operating mode, satellites used in the navigation solution reported by the GGA or GNS sentences, and DOP values. If only GPS, GLONASS, etc. are used for the reported position solution, the talker ID is GP, GL, etc. and the DOP values pertain to the individual system.

| $--GSA, a, x, xx,xx,xx,xx,xx,xx,xx,xx,xx,xx,xx,xx,x.x,x.x,x.x*hh<CR><LF> | | | |
|---|---|---|---|
| **Field No.** | **Format** | **Description** | **Remark** |
| 1 | a | Mode:<br>M = manual, forced to operate in 2D or 3D mode<br>A = automatic, allowed to automatically switch 2D/3D | |
| 2 | x | Mode: 1 = fix not available,<br>2 = 2D,<br>3 = 3D | |
| 3 | xx,xx,xx,xx,<br>xx,xx,xx,xx,<br>xx,xx,xx,xx | ID numbers of satellites used in solution | |
| 4 | x.x | PDOP | |
| 5 | x.x | HDOP | |
| 6 | x.x | VDOP | |

## HDT – Heading true

Actual vessel heading in degrees true produced by any device or system producing true heading.

| $--HDT, x.x, T*hh<CR><LF> | | | |
|---|---|---|---|
| **Field No.** | **Format** | **Description** | **Remark** |
| 1 | x.x, T | Heading, degrees true | |

## LRF – AIS long-range function

This sentence is used in both long-range interrogation requests and long-range interrogation replies. The LRF-sentence is the second sentence of the long-range interrogation request pair, LRI and LRF (see the LRI-sentence).

| $--LRF,x,xxxxxxxxx,c--c,c--c,c--c*hh<CR><LF> | | | |
|---|---|---|---|
| **Field No.** | **Format** | **Description** | **Remark** |
| 1 | x | Sequence number | |
| 2 | xxxxxxxxx | MMSI of requester | |
| 3 | c--c | Name of requester | |
| 4 | c--c | Function request | |
| 5 | c--c | Function reply status | |

## LRI – AIS Long-range interrogation

The long-range interrogation of the AIS unit is accomplished through the use of two sentences. The pair of interrogation sentence formatters, a LRI sentence followed by a LRF sentence, provides the information needed by a universal AIS unit to determine if it should construct and provide the reply sentences (LRF, LR1, LR2, and LR3).

| $--LRI,x,a,xxxxxxxxx,xxxxxxxxx,llll.ll,a,yyyyy.yy,a,llll.ll,a,yyyyy.yy,a*hh<CR><LF> | | | |
|---|---|---|---|
| **Field No.** | **Format** | **Description** | **Remark** |
| 1 | x | Sequence number | |
| 2 | a | Control flag | |
| 3 | xxxxxxxxx | MMSI of requester | |
| 4 | xxxxxxxxx | MMSI of destination | |
| 5 | llll.ll,a | Latitude – N/S | |
| 6 | yyyyy.yy,a | Longitude – E/W | |
| 7 | llll.ll,a | Latitude – N/S | |
| 8 | yyyyy.yy,a | Longitude – E/W | |

## RMC – Recommended minimum specific GNSS data

Time, date, position, course and speed data provided by a GNSS navigation receiver.

| $--RMC, hhmmss.ss, A, llll.ll,a, yyyyy.yy, a, x.x, x.x, xxxxxx, x.x,a, a, a*hh<CR><LF> | | | |
|---|---|---|---|
| **Field No.** | **Format** | **Description** | **Remark** |
| 1 | hhmmss.ss | UTC of position fix | |
| 2 | A | Status | |
| 3 | llll.ll,a | Latitude, N/S | |
| 4 | yyyyy.yy, a | Longitude, E/W | |
| 5 | x.x | Speed over ground, knots | |
| 6 | x.x | Course over ground, degrees true | |
| 7 | xxxxxx | Date: dd/mm/yy | |
| 8 | x.x,a | Magnetic variation, degrees, E/W | |
| 9 | a | Mode indicator | |
| 10 | a | Navigational status | |

## ROT – Rate of turn

Rate of turn and direction of turn.

| $--ROT, x.x, A*hh<CR><LF> | | | |
|---|---|---|---|
| **Field No.** | **Format** | **Description** | **Remark** |
| 1 | x.x | Rate of turn, °/min | |
| 2 | A | Status: A = data valid, V = data invalid | |

## SSA –Sender signature authentication

This sentence can be used both for authentication of sender and for authentication of untampered content. For this purpose, the sentence has to be applied before the protected sentence (for example EPV, SSD).

Other sentences shall not be interleaved between the sender signature authentication sentence and protected sentence, and the time between the SSA and the protected sentence should be limited.
The sender signature authentication protected sentence pair shall be sent without unnecessary delay between sentences, and the time interval between the sentences shall not exceed 2 s. Note that any of the sentences may be lost and timed out.

| $--SSA,ccc,c,h--h,*hh<CR><LF> | | | |
|---|---|---|---|
| **Field No.** | **Format** | **Description** | **Remark** |
| 1 | ccc | The following sentence formatter that should be protected (for example EPV or SSD). | |
| 2 | c | Type of method to calculate signature:<br>1: MD5 | |
| 3 | h--h | Hexadecimal representation of the signature, for example 32 hexacodes for MD5. | |

## SSD – AIS ship static data

This sentence is used to enter static parameters into a shipboard AIS unit. The parameters in this sentence support a number of the ITU-R M.1371 Messages.

| $--SSD,c--c,c--c,xxx,xxx,xx,xx,c,aa*hh<CR><LF> | | | |
|---|---|---|---|
| **Field No.** | **Format** | **Description** | **Remark** |
| 1 | c--c | Ship's call sign | |
| 2 | c--c | Ship's name | |
| 3 | xxx | Pos. ref., point dist."A," | |
| 4 | xxx | Pos. ref.,point dist. "B," | |
| 5 | xx | Pos. ref., point dist."C," | |
| 6 | xx | Pos. ref.,point dist. "D," | |
| 7 | c | DTE indicator flag | |
| 8 | aa | Source identifier | |

## THS – True heading and status

Actual vessel heading in degrees true produced by any device or system producing true heading. This sentence includes a “mode indicator” field providing critical safety related information about the heading data, and replaces the deprecated HDT sentence.

| $--THS,x.x,a*hh<CR><LF> | | | |
|---|---|---|---|
| **Field No.** | **Format** | **Description** | **Remark** |
| 1 | x.x | Heading, degrees true | |
| 2 | a | Mode indicator | |

## VBW – Dual ground/water speed

Water-referenced and ground-referenced speed data.

| $--VBW, x.x, x.x, A, x.x, x.x, A, x.x, A, x.x, A*hh<CR><LF> | | | |
|---|---|---|---|
| **Field No.** | **Format** | **Description** | **Remark** |
| 1 | x.x | Longitudinal water speed, knots | ignored |
| 2 | x.x | Transverse water speed, knots | ignored |
| 3 | A | Status : water speed, A = data valid,<br>V = data invalid | ignored |
| 4 | x.x | Longitudinal ground speed, knots | |
| 5 | x.x | Transverse ground speed, knots | |
| 6 | A | Status , ground speed, A = data valid,<br>V = data invalid | |
| 7 | x.x | Stern transverse water speed, knots | ignored |
| 8 | A | Status : stern water speed, A = data valid,<br>V = data invalid | ignored |
| 9 | x.x | Stern transverse ground speed, knots | ignored |
| 10 | A | Status : stern ground speed, A = data valid,<br>V = data invalid | ignored |

## VHW – Water speed and heading

The compass heading to which the vessel points and the speed of the vessel relative to the water.

| $--VHW, x.x, T, x.x, M, x.x, N, x.x, K*hh<CR><LF> | | | |
|---|---|---|---|
| **Field No.** | **Format** | **Description** | **Remark** |
| 1 | x.x, T | Heading, degrees true | |
| 2 | x.x, M | Heading, degrees magnetic | Ignored |
| 3 | x.x, N | Speed, knots | Ignored |
| 4 | x.x, K | Speed, km/h | Ignored |

## VSD – AIS voyage static data

This sentence is used to enter information about a ship's transit that remains relatively static during the voyage.

| $--VSD,x.x,x.x,x.x,c--c,hhmmss.ss,xx,xx,x.x,x.x*hh<CR><LF> | | | |
|---|---|---|---|
| **Field No.** | **Format** | **Description** | **Remark** |
| 1 | x.x | Type of ship and cargo category | |
| 2 | x.x | Maximum present static draught | |
| 3 | x.x | Persons on-board | |
| 4 | c--c | Destination | |
| 5 | hhmmss.ss | Estimated UTC of arrival at destination | |
| 6 | xx | Estimated day of arrival at destination | |
| 7 | xx | Estimated month of arrival at destination | |
| 8 | x.x | Navigational status | |
| 9 | x.x | Regional application flags | |

## VTG – Course over ground and ground speed

The actual course and speed relative to the ground.

| $--VTG, x.x, T, x.x, M, x.x, N, x.x, K,a*hh<CR><LF> | | | |
|---|---|---|---|
| **Field No.** | **Format** | **Description** | **Remark** |
| 1 | x.x, T | Course over ground, degrees true | |
| 2 | x.x, M | Course over ground, degrees magnetic | ignored |
| 3 | x.x, N | Speed over ground, knots | |
| 4 | x.x, K | Speed over ground, km/h | ignored |
| 5 | a | Mode indicator | |

## PAMC, DBG – proprietary sentences, debug

The proprietary sentences are additional sentences only applicable to this product. Its main usage is for enabling testing mode and parameter settings.

This sentence is used for configuration. It commands unit with given parameters.

| $PAMC,C,c-c,x,x,x,x,x,x,x,x*hh<CR><LF> | | | |
|---|---|---|---|
| **Field No.** | **Format** | **Description** | **Remark** |
| 1 | C | Command : “C” | |
| 2 | c-c | Function type. For example, DBG. | |
| 3 | x | Parameter Id 1, 0–998 | |
| 4 | x | Parameter value 1, 0–1000000000 | |
| 5 | x | Parameter Id 2, 0–998 | |
| 6 | x | Parameter value 2, 0–1000000000 | |
| 7 | x | Parameter Id 3, 0–998 | |
| 8 | x | Parameter value 3, 0–1000000000 | |
| 9 | x | Parameter Id 4, 0–998 | |
| 10 | x | Parameter value 4, 0–1000000000 | |

This sentence is used for retrieving responses.

| $PAMC,R,c-c,x,x,x,x,x,x,x,x*hh<CR><LF> | | | |
|---|---|---|---|
| **Field No.** | **Format** | **Description** | **Remark** |
| 1 | R | Response : “R” | |
| 2 | c-c | Function type. For example, DBG. | |
| 3 | x | Parameter Id 1, 0–998 | |
| 4 | x | Parameter value 1, 0–1000000000 | |
| 5 | x | Parameter Id 2, 0–998 | |
| 6 | x | Parameter value 2, 0–1000000000 | |
| 7 | x | Parameter Id 3, 0–998 | |
| 8 | x | Parameter value 3, 0–1000000000 | |
| 9 | x | Parameter Id 4, 0–998 | |
| 10 | x | Parameter value 4, 0–1000000000 | |

### PAMC, DSC – Proprietary sentences, digital selective calling

When AIS transceiver receives DCS messages, this sentence is used to output DSC pattern.

| $PAMC,R,DSC,c-c*hh<CR><LF> | | | |
|---|---|---|---|
| **Field No.** | **Format** | **Description** | **Remark** |
| 1 | c-c | DSC pattern | |

### ACN – Alert command

This sentence is used for acknowledge, silence, responsibility transfer and to request repeat of alert details in case the reception process has detected, based on ALC, that ALF has been missed.

| $--ACN,hhmmss.ss,aaa,x.x,x.x,c,a*hh <CR><LF> | | | |
|---|---|---|---|
| **Field No.** | **Format** | **Description** | **Remark** |
| 1 | hhmmss.ss | Time | |
| 2 | aaa | Manufacturer mnemonic code | |
| 3 | x.x | Alert Identifier | |
| 4 | x.x | Alert Instance, 1 to 999999 | |
| 5 | c | Alert command, A, Q, O or S | |
| 6 | a | Sentence status flag | |

## Interpretation of output sentences

### ABK – AIS addressed and binary broadcast acknowledgment

The ABK-sentence is generated when a transaction, initiated by reception of an ABM, AIR, or BBM sentence, is completed or terminated.

| $--ABK,xxxxxxxxx,x,x.x,x,x*hh<CR><LF> | | | |
|---|---|---|---|
| **Field No.** | **Format** | **Description** | **Remark** |
| 1 | xxxxxxxxx | MMSI of the addressed AIS unit | |
| 2 | x | AIS channel of reception | |
| 3 | x.x | ITU-R M.1371 message ID | |
| 4 | x | Message sequence number | |
| 5 | x | Type of acknowledgment | |

## ACA – AIS channel assignment message

An AIS device can receive regional channel management information.

| $-ACA,x,llll.ll,a,yyyyy.yy,a,llll.ll,a,yyyyy.yy,a,x,xxxx,x,xxxx,x,x,x,a,x,hhmmss.ss*hh<CR><LF> | | | |
|---|---|---|---|
| **Field No.** | **Format** | **Description** | **Remark** |
| 1 | x | Sequence number | |
| 2 | llll.ll,a | Region northeast corner latitude – N/S | |
| 3 | yyyyy.yy,a | Region northeast corner longitude – E/W | |
| 4 | llll.ll,a | Region southwest corner latitude – N/S | |
| 5 | yyyyy.yy,a | Region southwest corner longitude – E/W | |
| 6 | x | Transition zone size | |
| 7 | xxxx | Channel A | |
| 8 | x | Channel A bandwidth | |
| 9 | xxxx | Channel B | |
| 10 | x | Channel B bandwidth | |
| 11 | x | Tx/Rx mode control | |
| 12 | x | Power level control | |
| 13 | a | Information source | |
| 14 | x | In-use flag | |
| 15 | hhmmss.ss | Time of “in use” change | |

## ALR – Set alarm state

Local alarm condition and status. This sentence is used to report an alarm condition on a device and its current state of acknowledgment.

| $--ALR,hhmmss.ss,xxx,A, A,c--c*hh<CR><LF> | | | |
|---|---|---|---|
| **Field No.** | **Format** | **Description** | **Remark** |
| 1 | hhmmss.ss | Time of alarm condition change, UTC | |
| 2 | xxx | Unique alarm number (identifier) at alarm source | |
| 3 | A | Alarm condition, A = threshold exceeded, V = not exceeded | |
| 4 | A | Alarm's acknowledge state, A = acknowledged, V = unacknowledged | |
| 5 | c--c | Alarm's description text | |

## EPV – Command or report equipment property value

| $--EPV,a,cc,c--c,x.x,c--c*hh<CR><LF> | | | |
|---|---|---|---|
| **Field No.** | **Format** | **Description** | **Remark** |
| 1 | a | Sentence status flag | |
| 2 | cc | Destination equipment type | |
| 3 | c--c | Unique identifier | |
| 4 | x.x | Property identifier | |
| 5 | c--c | Value of property to be set | |

## LR1 – AIS long-range reply sentence 1

The LR1 sentence identifies the destination for the reply and contains the information items requested by the "A" function identification character (see the LRF sentence).

| $--LR1,x,xxxxxxxxx,xxxxxxxxx,c--c,c--c,xxxxxxxxx*hh<CR><LF> | | | |
|---|---|---|---|
| **Field No.** | **Format** | **Description** | **Remark** |
| 1 | x | Sequence number | |
| 2 | xxxxxxxxx | MMSI of responder | |
| 3 | xxxxxxxxx | MMSI of requester | |
| 4 | c--c | Ship's name, 1 to 20 characters | |
| 5 | c--c | Call sign, 1 to 7 characters | |
| 6 | xxxxxxxxx | IMO number, 9-digit number | |

## LR2 – AIS long-range reply sentence 2

The LR2-sentence contains the information items requested by the "B, C, E and F" function identification characters, (see the LRF sentence).

| $--LR2,x,xxxxxxxxx,xxxxxxxx,hhmmss.ss,llll.ll,a,yyyyy.yy,a,x.x,T,x.x,N*hh<CR><LF> | | | |
|---|---|---|---|
| **Field No.** | **Format** | **Description** | **Remark** |
| 1 | x | Sequence number | |
| 2 | xxxxxxxxx | MMSI of responder | |
| 3 | xxxxxxxx | Date: ddmmyyyy, 8 digits | |
| 4 | hhmmss.ss | UTC time of position | |
| 5 | llll.ll,a | Latitude – N/S | |
| 6 | yyyyy.yy,a | Longitude, E/W | |
| 7 | x.x,T | Course over ground, degrees, true | |
| 8 | x.x,N | Speed over ground, knots | |

## LR3 – AIS long-range reply sentence 3

The LR3 sentence contains the information items requested by the "I, O, P, U and W" function identification character (see the LRF sentence).

| $--LR3,x,xxxxxxxxx,c--c,xxxxxx,hhmmss.ss,x.x,x.x,x.x,x.x,x.x,x.x*hh<CR><LF> | | | |
|---|---|---|---|
| **Field No.** | **Format** | **Description** | **Remark** |
| 1 | x | Sequence number | |
| 2 | xxxxxxxxx | MMSI of responder | |
| 3 | c--c | Voyage destination, 1 to 20 characters | |
| 4 | xxxxxx | ETA date: ddmmyy | |
| 5 | hhmmss.ss | ETA time | |
| 6 | x.x | Draught | |
| 7 | x.x | Ship/cargo | |
| 8 | x.x | Ship length | |
| 9 | x.x | Ship breadth | |
| 10 | x.x | Ship type | |
| 11 | x.x | Persons, 0 to 8191 | |

## LRF – AIS long-range function

This sentence is used in both long-range interrogation requests and long-range interrogation replies. The LRF-sentence is the second sentence of the long-range interrogation request pair, LRI and LRF (see the LRI-sentence).

| $--LRF,x,xxxxxxxxx,c--c,c--c,c--c*hh<CR><LF> | | | |
|---|---|---|---|
| **Field No.** | **Format** | **Description** | **Remark** |
| 1 | x | Sequence number | |
| 2 | xxxxxxxxx | MMSI of requester | |
| 3 | c--c | Name of requester | |
| 4 | c--c | Function request | |
| 5 | c--c | Function reply status | |

## TRL –AIS transmitter-non-functioning log

This sentence is specific to AIS class A stations. It is intended to support the retrieval of the AIS non-functioning log information.

| $--TRL,x.x,x.x,x,xxxxxxxx,hhmmss.ss,xxxxxxxx,hhmmss.ss,x*hh<CR><LF> | | | |
|---|---|---|---|
| **Field No.** | **Format** | **Description** | **Remark** |
| 1 | x.x | Total number of log entries | |
| 2 | x.x | Log entry number | |
| 3 | x | Sequential message identifier | |
| 4 | xxxxxxxx | Switch off date | |
| 5 | hhmmss.ss | Switch off UTC time | |
| 6 | xxxxxxxx | Switch on date | |
| 7 | hhmmss.ss | Switch on UTC time | |
| 8 | x | Reason code<br>1 = power off<br>2 = silent mode<br>3 = transmission switched off by channel management command<br>4 = equipment malfunction<br>5 = invalid configuration | |

## TXT – Text transmission

For the transmission of short text messages. Longer text messages may be transmitted by using multiple sentences.

| $--TXT,xx,xx,xx,c--c*hh<CR><LF> | | | |
|---|---|---|---|
| **Field No.** | **Format** | **Description** | **Remark** |
| 1 | xx | Total number of sentences | |
| 2 | xx | Sentence number | |
| 3 | xx | Text identifier | |
| 4 | c--c | Text message | |

## VDM – AIS VHF data-link message

This sentence is used to transfer the entire contents of a received AIS message packet, as defined in ITU-R M.1371 and as received on the VHF Data Link (VDL), using the “six-bit” field type.

| !--VDM,x,x,x,a,s--s,x*hh<CR><LF> | | | |
|---|---|---|---|
| **Field No.** | **Format** | **Description** | **Remark** |
| 1 | x | Total number of sentences needed to transfer the message | |
| 2 | x | Sentence number | |
| 3 | x | Sequential message identifier | |
| 4 | a | AIS channel | |
| 5 | s--s | Encapsulated ITU-R M.1371 radio message | |
| 6 | x | Number of fill-bits | |

## VDO – AIS VHF data-link own-vessel report

This sentence is used to transfer the entire contents of an AIS unit’s broadcast message packet, as defined in ITU-R M.1371 and as sent out by the AIS unit over the VHF data link (VDL) using the “six-bit” field type.

| !--VDO,x,x,x,a,s--s,x*hh<CR><LF> | | | |
|---|---|---|---|
| **Field No.** | **Format** | **Description** | **Remark** |
| 1 | x | Total number of sentences needed to transfer the message | |
| 2 | x | Sentence number | |
| 3 | x | Sequential message identifier | |
| 4 | a | AIS channel | |
| 5 | s--s | Encapsulated ITU-R M.1371 radio message | |
| 6 | x | Number of fill-bits | |

## ALC – Cyclic alert list

The purpose of this sentence is to satisfy the needs for safe and consistent data distribution with minimal data traffic. Each change on an alert's data leads to an incremented revision counter, so an alert-processing device needs only check the alert entries in the ALC messages to ensure that no ALF message has been lost.

| $--ALC,xx,xx,xx,x.x,aaa,x.x,x.x,x.x,.....,aaa,x.x,x.x,x.x*hh <CR><LF> | | | |
|---|---|---|---|
| **Field No.** | **Format** | **Description** | **Remark** |
| 1 | xx | Total number of sentences for this message, 01 to 99 | |
| 2 | xx | Sentence number, 01 to 99 | |
| 3 | xx | Sequential message identifier, 00 to 99 | |
| 4 | x.x | Number of alert entries | |
| 5 | aaa | Manufacturer mnemonic code | |
| 6 | x.x | Alert identifier | |
| 7 | x.x | Alert instance (BIIT ID) | |
| 8 | x.x | Revision counter | |
| 9 | ..... | Additional Alert entries | |
| 10 | aaa,x.x,x.x,x.x | Alert entry n | |

## ALF – Alert sentence

This sentence is used to report an alert condition and the alert state of a device. An ALF message shall be published for an alert each time the alert information in this sentence changes and on alert request.

| $--ALF,x,x,x,hhmmss.ss,a,a,a,aaa,x.x,x.x,x.x,x,c---c*hh <CR><LF> | | | |
|---|---|---|---|
| **Field No.** | **Format** | **Description** | **Remark** |
| 1 | x | Total number of ALF sentences for this message, 1 to 2 | |
| 2 | x | Sentence number, 1 to 2 | |
| 3 | x | Sequential message identifier, 0 to 9 | |
| 4 | hhmmss.ss | Time of last change | |
| 5 | a | Alert category, A, B or C | |
| 6 | a | Alert priority, E, A, W or C | |
| 7 | a | Alert state, A, S, N, O, U or V | |
| 8 | aaa | Manufacturer mnemonic code | |
| 9 | x.x | Alert identifier | |
| 10 | x.x | Alert instance (BIIT ID), 1 to 999999 | |
| 11 | x.x | Revision counter, 1 to 99 | |
| 12 | x | Escalation counter, 0 to 9 | |
| 13 | c---c | Alert text | |

## ARC – Alert command refused

This sentence is used for which it is illegal to accept acknowledge or responsibility transfer, e.g. not enough information for decision support available or the source of acknowledgment is not acceptable.

| $--ARC,hhmmss.ss,aaa,x.x,x.x,c*hh <CR><LF> | | | |
|---|---|---|---|
| **Field No.** | **Format** | **Description** | **Remark** |
| 1 | hhmmss.ss | Time | |
| 2 | aaa | Manufacturer mnemonic code | |
| 3 | x.x | Alert identifier | |
| 4 | x.x | Alert instance (BIIT ID), 1 to 999999 | |
| 5 | c | Refused alert command, A, Q, O or S | |

# APPENDIX B: NMEA 2000® PGN INFORMATION

The following table is a list of the NMEA 2000® PGNs supported by the V5043 unit.

| Output | |
|---|---|
| **PGN** | **Description** |
| 59392 | ISO Acknowledgment |
| 59904 | ISO Request |
| 60160 | ISO Transport Protocol, Data Transfer |
| 60416 | ISO Transport Protocol, Connection Management |
| 60928 | ISO Address Claim |
| 126208 | NMEA® – Acknowledge group function |
| 126464 | PGN List – Transmit PGN's group function |
| 126993 | Heartbeat |
| 126996 | Product Information |
| 126998 | Configuration Information |
| 129038 | AIS Class A Position Report |
| 129039 | AIS Class B Position Report |
| 129040 | AIS Class B Extended Position Report |
| 129041 | AIS Aids to Navigation (AtoN) Report |
| 129792 | AIS DGNSS Broadcast Binary Message |
| 129793 | AIS UTC and Date Report |
| 129794 | AIS Class A Static and Voyage Related Data |
| 129795 | AIS Addressed Binary Message |
| 129797 | AIS Binary Broadcast Message |
| 129798 | AIS SAR Aircraft Position Report |
| 129800 | AIS UTC/Date Inquiry |
| 129801 | AIS Addressed Safety Related Message |
| 129802 | AIS Safety Related Broadcast Message |
| 129803 | AIS Interrogation |
| 129804 | AIS Assignment Mode Command |
| 129805 | AIS Data Link Management Message |
| 129806 | AIS Channel Management |
| 129807 | AIS Group Assignment |

| | |
|---|---|
| 129809 | AIS Class B “CS” Static Data Report, Part A |
| 129810 | AIS Class B “CS” Static Data Report, Part B |
| 129811 | AIS Single Slot Binary Message |
| 129812 | AIS Multi Slot Binary Message |
| 129813 | AIS Long-Range Broadcast Message |
| 129816 | AIS Acknowledge |
| 129793 | AIS UTC and Date Report |
| 129794 | AIS Class A Static and Voyage Related Data |
| 129795 | AIS Addressed Binary Message |
| 129797 | AIS Binary Broadcast Message |
| 129798 | AIS SAR Aircraft Position Report |
| 129800 | AIS UTC/Date Inquiry |
| 129801 | AIS Addressed Safety Related Message |
| 129802 | AIS Safety Related Broadcast Message |
| 129803 | AIS Interrogation |
| 129804 | AIS Assignment Mode Command |
| 129805 | AIS Data Link Management Message |
| 129806 | AIS Channel Management |
| 129807 | AIS Group Assignment |
| 129809 | AIS Class B “CS” Static Data Report, Part A |
| 129810 | AIS Class B “CS” Static Data Report, Part B |
| 129811 | AIS Single Slot Binary Message |
| 129812 | AIS Multi Slot Binary Message |
| 129813 | AIS Long-Range Broadcast Message |
| 129816 | AIS Acknowledge |

| Input | |
|---|---|
| **PGN** | **Description** |
| 59392 | ISO Acknowledgment |
| 59904 | ISO Request |
| 60160 | ISO Transport Protocol, Data Transfer |
| 60416 | ISO Transport Protocol, Connection Management |
| 60928 | ISO Address Claim |
| 65240 | ISO Commanded Address |
| 126208 | NMEA® – Request group function<br>NMEA® – Command group function |

# APPENDIX C: INSTALLATION AND MAINTENANCE RECORD

The following installation information should be completed and retained on board the vessel for maintenance records.

## Installation and maintenance record

| Vessel information | | | |
|---|---|---|---|
| Vessel name | | Flag state | |
| IMO number | | MMSI number | |
| Owner/Company | | Radio call sign | |
| Type of vessel | | Gross tonnage | |
| Length (m) | | Beam (m) | |

## AIS Class A transceiver information

| AIS Class A transceiver information | | | |
|---|---|---|---|
| Transceiver S/N | | Pilot Plug S/N | |
| Junction Box S/N | | GPS Ant. S/N | |
| Password | | | |
| Power supply voltage (V): | | | |
| Power supply maximum output current (A) | | | |
| Note | | | |

## GPS (GNSS) antenna location

| GPS (GNSS) antenna location | |
|---|---|
| A: distance to bow (m) | |
| B: distance to stern (m) | |
| C: distance to port-side (m) | |
| D: distance to starboard (m) | |

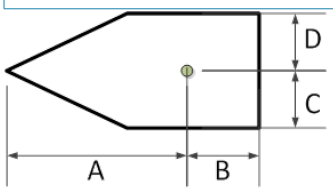


## Connected sensors and devices

| Connected sensors and devices | | |
|---|---|---|
| **Connected port** | **Equipment** | **Model number** |
| Sensor 1 | | |
| Sensor 2 | | |
| Sensor 3 | | |
| Ext Display Port | | |
| Pilot Port | | |
| Long Range Port | | |
| DGNSS Data Port | | |
| Other Device | | |

## Installer information

| Installer information | | |
|---|---|---|
| Connected port | Equipment | Model number |
| Company name | | |
| Technician’s name | | |
| Telephone/Mobile no. | | |
| Address | | |
| Place | Date | Installer’s Signature |

©2024 Navico Group. All Rights Reserved. Navico Group is a division of Brunswick Corporation.

®Reg. U.S. Pat. & Tm. Off, and ™ common law marks.
Visit www.navico.com/intellectual-property to review the global trademark rights and accreditations for Navico Group and other entities.

www.navico-commercial.com

*988-13175-001*