SIMRAD

B&G

RS100/RS100-B
V100/V100-B

USER MANUAL

ENGLISH

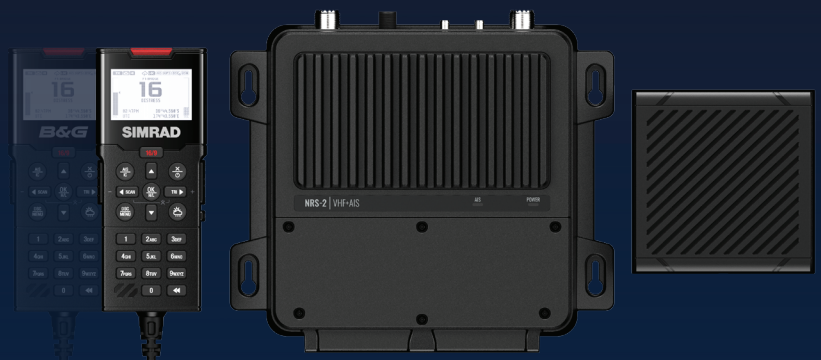

RS100/RS100-B
V100/V100-B

www.simrad-yachting.com | www.bandg.com

Preface

Disclaimer

As Navico is continuously improving this product, we retain the right to make changes to the product at any time which may not be reflected in this version of the manual. Please contact your nearest distributor if you require any further assistance.

It is the owner's sole responsibility to install and use the equipment in a manner that is legal and will not cause accidents, personal injury or property damage. The user of this product is solely responsible for observing safe boating practices.

NAVICO HOLDING AS AND ITS SUBSIDIARIES, BRANCHES AND AFFILIATES DISCLAIM ALL LIABILITY FOR ANY USE OF THIS PRODUCT IN A WAY THAT MAY CAUSE ACCIDENTS, DAMAGE OR THAT MAY VIOLATE THE LAW.

Governing Language

This statement, any instruction manuals, user guides and other information relating to the product (Documentation) may be translated to, or has been translated from, another language (Translation). In the event of any conflict between any Translation of the Documentation, the English language version of the Documentation will be the official version of the Documentation.

This manual represents the product as at the time of creation. Navico Holding AS and its subsidiaries, branches and affiliates reserve the right to make changes to specifications without notice.

Continuous improvement: Software updates applied to the radio may not be reflected in this manual.

Copyright

Copyright © 2022 Navico Holding AS.

Warranty

The warranty card is supplied as a separate document.

In case of any queries, refer to the brand website of your unit or system:

- www.simrad-yachting.com
- www.bandg.com

About this manual

This manual is a reference guide for installing and operating the RS100, RS100-B, V100, V100-B Blackbox VHF radio systems. Important text that requires special attention from the reader is emphasized as follows:

➔ ***Note:*** Used to draw the reader's attention to a comment or some important information.

⚠ **Warning:** Used when it is necessary to warn personnel that they should proceed carefully to prevent risk of injury and/or damage to equipment/personnel.

Blackbox VHF radio system

This manual covers the following products and components:

SIMRAD® RS100 Blackbox VHF Radio System

- NRS-1 Marine VHF Radio Processor
- HS100 Wired Handset SIMRAD®
- SP100 Wired Speaker

SIMRAD® RS100-B Blackbox VHF & AIS Radio System

- NRS-2 Marine VHF Radio & AIS Class-B Processor
- HS100 Wired Handset SIMRAD®
- SP100 Wired Speaker

B&G® V100 Blackbox VHF Radio System

- NRS-1 Marine VHF Radio Processor
- H100 Wired Handset B&G®
- SP100 Wired Speaker

B&G® V100-B Blackbox VHF + AIS Radio System

- NRS-2 Marine VHF Radio & AIS Class-B Processor
- H100 Wired Handset B&G®
- SP100 Wired Speaker

Optional components

Wireless Handset SIMRAD® (HS40)

Wireless Handset B&G® (H60)

Wireless Antenna Extension cable, 6 meters (CW100-6)

Handset Cable, 20 meters (CH100-20)

Handset Extension cable, 10 meters

Licensing information

- The user is advised to check the radio operating licensing requirements of their country before using this VHF radio. The operator is solely responsible for observing proper radio installation and usage practices.
- In some regions/countries, a Radio Operator's license is required and it is the user's responsibility to determine whether such a license is required before operating the radio.
- The frequencies used by this radio are reserved for Maritime use only and those frequencies must be included on the user's Radio Operator's license.
- A valid USER MMSI number must be entered into this radio before DSC functions can be used. You must apply for an MMSI number which is usually obtained from the same authority that issues the Radio Operator's license. Contact the appropriate licensing authority in your country. If you're unsure who to contact, consult your Simrad® or B&G® dealers.
- A valid ATIS ID number must be entered into this radio before ATIS functions can be used. An ATIS ID number is issued by Ofcom when you add one or more pieces of ATIS equipment to your Ship Radio License.

Important information

- This VHF Blackbox radio system is designed to generate a digital maritime distress call to facilitate search and rescue. To be effective as a safety device, this radio must be used only within the geographic range of a shore-based VHF marine Channel 70 distress and safety watch system. The geographic range may vary but under normal conditions is approximately 20 nautical miles.
- This radio can be configured to operate in the user's region and country of operation. The user must select the region and country of operation during the initial setup of the radio. Refer to "Country settings table" on page 117 for details of supported Region and Countries.
- The radio's region and country setting can be changed at any time from the Reset menu. Refer to "Reset" on page 48 for more details.

Regulatory compliance statements

European Union

Navico declare under our sole responsibility that the RS100, RS100-B, V100, V100-B and HS40, H60 Wireless Handset conforms with the requirements of Directive 2014/53/EU (RED).

HS100, H100 Wired Handset complies with CE under EMC Directive 2014/30/EU

The relevant Declaration of conformity is available in the product's section at the following website: www.navico-commercial.com

EU RF exposure compliance notice for fixed mount VHF

To be protected against all verified adverse effects, the separation distance of at least 2.1 m must be maintained between the antenna of the radio having max. 6 dBi antenna and all persons.

Countries of intended use in the EU

AUT - Austria	BEL - Belgium	BGR - Bulgaria	CHE - Switzerland
CYP - Cyprus	CZE - Czech Republic	DEU - Germany	DNK - Denmark
EST - Estonia	ESP - Spain	FIN - Finland	FRA - France
GRC - Greece	HRV - Croatia	HUN - Hungary	IRL - Ireland
ISL - Iceland	ITA - Italy	LIE - Liechtenstein	LTU - Lithuania
LUX - Luxembourg	LVA - Latvia	MDA - Moldovia	MLT - Malta
NLD - Netherlands	NOR - Norway	POL - Poland	PRT - Portugal
ROU - Romania	SKK - Slovak Republic	SRB - Serbia	SWE - Sweden
SVN - Slovenia	TUR - Turkey		

United Kingdom

Hereby, Navico declares that the radio equipment types RS100, RS100-B, V100 and V100-B and HS40, H60 Wireless Handset are in compliance with Radio Equipment Regulations 2017.

HS100, H100 Wired Handset complies with UKCA under The Electro-magnetic Compatibility Regulations 2016

The full text of the UK declaration of conformity is available at the following internet address: www.simrad-yachting.com and www.bandg.com

United States

Part 15 of the FCC Rules. Operation is subject to the following two conditions:

(**1**) this device may not cause harmful interference, and

(**2**) this device must accept any interference received, including interference that may cause undesired operation.

> ⚠ **Warning:** The user is cautioned that any changes or modifications not expressly approved by the party responsible for compliance could void the user's authority to operate the equipment.

RF emissions notice

This equipment complies with FCC radiation exposure limits set forth for an uncontrolled environment. This device's antenna must be installed in accordance with provided instructions; and it must be operated with minimum 2.1 m spacing between the antennas and all person's body (excluding extremities of hands, wrist and feet) during operation. Further, this transmitter must not be co-located or operated in conjunction with any other antenna or transmitter.

➔ ***Note:*** This equipment has been tested and found to comply with the limits for a Class B digital device, pursuant to Part 15 of the FCC Rules. This equipment generates, uses and can radiate radio frequency energy and, if not installed and used in accordance with the instructions, may cause harmful interference to radio communications. However, there is no guarantee that the interference will not occur in a particular installation. If this equipment does cause harmful interference to radio or television reception, which can be determined by turning the equipment off and on, the user is encouraged to try to correct the interference by one or more of the following measures:

- Reorient or relocate the receiving antenna.
- Increase the separation between the equipment and receiver.
- Connect the equipment into an outlet on a circuit different from that of the receiver is connected.
- Consult the dealer or an experienced technician for help.

RF exposure compliance statement for wireless handset (HS40, H60)

This device was tested for typical body-worn operations. To comply with RF exposure requirements, a minimum separation distance of 0 mm must be maintained between the user's body and the handset, including the antenna.

FCC Part 18 compliance statement for cradle charger (BC-12)

This device complies with Part 18 of the FCC Rules.

> ⚠ **Warning:** Changes or modifications not expressly approved by the party responsible for compliance could void the user's authority to operate the product.

→ ***Note:*** This equipment has been tested and found to comply with the limits for a wireless power transfer, pursuant to Part 18 of the FCC Rules. These limits are designed to provide reasonable protection against harmful interference in a residential installation. This equipment generates, uses and can radiate radio frequency energy, and, if not installed and used in accordance with the instructions, may cause harmful interference to radio communications. However, there is no guarantee that interference will not occur in a particular installation. If this equipment does cause harmful interference to radio or television reception, which can be determined by turning the equipment off and on, the user is encouraged to try to correct the interference by one or more of the following measures:

- Reorient or relocate the receiving antenna.
- Increase the separation between the equipment and receiver.
- Connect the equipment into an outlet on a circuit different from that of the receiver is connected.
- Consult the dealer or an experienced technician for help.

FCC RF Exposure compliance for cradle charger (BC-12)

This device complies with FCC radiation exposure limits set forth for an uncontrolled environment. This transmitter must not be co-located or operating in conjunction with any other antenna or transmitter.

Canada

This device complies with CAN ICES-3(B)/NMB-3(B) and contains license-exempt transmitter(s)/receiver(s) that comply with Innovation, Science and Economic Development Canada's license- exempt RSS(s). Operation is subject to the following two conditions:

- This device may not cause interference.
- This device must accept any interference, including interference that may cause undesired operation of the device.

L'émetteur/récepteur exempt de licence contenu dans le présent appareil est conforme aux CNR d'Innovation, Sciences et Développement économique Canada applicables aux appareils radio exempts de licence. L'exploitation est autorisée aux deux conditions suivantes:

- L'appareil ne doit pas produire de brouillage.
- L'appareil doit accepter tout brouillage radioélectrique subi, même si le brouillage est susceptible d'en compromettre le fonctionnement.

Innovation, Science and Economic Development Canada (ISED)

This equipment complies with IC RSS-102 radiation exposure limits set forth for an uncontrolled environment. This transmitter must not be co-located or operating in conjunction with any other antenna or transmitter. This equipment should be installed and operated with minimum distance 2.1 m between the radiator and your body.

Cet équipement est conforme aux limites d'exposition aux radiations IC CNR-102 établies pour un environnement non contrôlé. Cet émetteur ne doit pas être situé ou fonctionner conjointement avec une autre antenne ou un autre émetteur. Cet équipement doit être installé et utilisé avec une distance minimale de 2.1 m entre le radiateur et votre corps.

Under Innovation, Science and Economic Development Canada (ISED) regulations, this radio transmitter may only operate using an antenna of a type and maximum (or lesser) gain approved for the transmitter by ISED Canada. To reduce potential radio interference to other users, the antenna type and its gain should be so chosen that the equivalent isotropically radiated power (e.i.r.p.) is not more than that necessary for successful communication.

Conformément à la réglementation d'Innovation, Sciences et Développement Économique Canada (ISDE), le présent émetteur radio peut fonctionner avec une antenne d'un type et d'un gain maximal (ou inférieur) approuvé pour l'émetteur par ISDE Canada. Dans le but de réduire les risques de brouillage radioélectrique à l'intention des autres utilisateurs, il faut choisir le type d'antenne et son gain de sorte que la puissance isotrope rayonnée quivalente (p.i.r.e.) ne dépassepas l'intensité nécessaire à l'établissement d'une communication satisfaisante.

This radio transmitter has been approved by Science and Economic Development Canada (ISED) to operate with the antenna types listed in the Specifications section in this manual, with the maximum permissible gain and required antenna impedance for each antenna type indicated. Antenna types not included in this list, having a gain greater than the maximum gain indicated for that type, are strictly prohibited for use with this device.

Le présent émetteur radio a été approuvé par Innovation, Sciences et Développement Économique Canada pour fonctionner avec les types d'antenne énumérés ci-dessous et ayant un gain admissible maximal et l'impédance requise pour chaque type d'antenne. Les types d'antenne non inclus dans cette liste, ou dont le gain est supérieur au gain maximal indiqué, sont strictement interdits pour l'exploitation de l'émetteur.

IC RF Exposure compliance for wireless handset and cradle charger (BC-12)

This equipment complies with IC RSS-102 radiation exposure limits set forth for an uncontrolled environment. This transmitter must not be co-located or operating in conjunction with any other antenna or transmitter.

Cet équipement est conforme aux limites d'exposition aux radiations IC CNR-102 établies pour un environnement non contrôlé. Cet émetteur ne doitpas être situé ou fonctionner conjointement avec une autre antenne ou un autre émetteur.

Australia & New Zealand

Complies with the requirements of level 2 devices of the Radio communications (Electromagnetic Compatibility) standard 2017, Radiocommunications (VHF Radiotelephone Equipment – Maritime Mobile Service) Standard 2018, and Radiocommunications (Short Range Devices) Standard 2014.

Trademarks

B&G® is a registered trademark of Navico Holding AS.

SIMRAD® is a registered trademark of Kongsberg Maritime AS, Licensed to Navico Holding AS.

NMEA®, NMEA 0183® and NMEA 2000® are registered trademarks of the National Marine Electronics Association.

®Reg. U.S. Pat. & Tm. Off, and ™ common law marks.

Visit www.navico.com/intellectual-property to review the global

trademark rights and accreditations for Navico Holding AS and other entities..

DSC (Digital Selective Calling)

Digital Selective Calling offers significant safety and convenience advantages over older VHF radios without this functionality.

- A valid USER MMSI must be entered into this radio before DSC functions can be used.
- Many countries do not have radio repeaters that support DSC message relaying. However DSC can still be useful for direct ship-to- ship communication, where the other vessel is also equipped with a DSC capable radio.
- DSC distress calls generated by this radio are limited to the same range restrictions that apply to regular VHF transmissions. The vessel sending a distress can only rely upon DSC if within range of a GMDSS Coast Radio Station. Typical VHF range may be about 20NM, though this varies greatly depending upon installation, antenna type, meteorological conditions, etc.

ATIS (Automatic Transmitter Identification System)

- ATIS is required for vessels making VHF transmissions whilst on the inland waterways of the Regional Arrangement Concerning the Radiotelephone Service on Inland Waterways (RAINWAT) signatory countries.
- RAINWAT is an agreement to implement common principles and rules for the safe carriage of people and goods on Inland Waterways.
- The signatory countries are: Austria, Belgium, Bulgaria, Croatia, the Czech Republic, France, Germany, Hungary, Luxembourg, Moldova, Montenegro, the Netherlands, Poland, Romania, Serbia, the Slovak Republic and Switzerland.
- Where a VHF is required on the inland waterways of the signatory countries, this must be capable of ATIS transmissions, and have the feature activated.
- The use of ATIS is prohibited outside the European inland waterways covered by the Basel Agreement.

MMSI and ATIS ID

The user MMSI (Marine Mobile Service Identity) is a unique nine digit number. It is used on marine transceivers that are capable of using DSC (Digital Selective Calling).

- An MMSI remains with a vessel, even if the vessel is sold on.
- Your vessel MMSI must be assigned to you by an approved authority. It is illegal to use a self-assigned (made up) MMSI number.
- A Group Call ID begins with '0' followed by 8 numeric digits (0xxxxxxxx).
- A Coast Station MMSI begins with 00 followed by 7 numeric digits (00xxxxxxx).
- By law, you are not able to change your MMSI once it is entered into the radio. This is why there is a confirmation screen when entering the MMSI. If you need to have the MMSI in the radio changed, the radio must be taken back to your Simrad® or B&G® dealer.
- An ATIS ID is only required in certain EU countries when navigating some inland waterways. It is usually a different number to your MMSI. Your ATIS ID must be assigned to you by an approved authority.

AIS CLASS-B Safety Warning (NRS-2 only)

⚠ **Warning:** The AIS transceiver in the NRS-2 Blackbox is an aid to navigation and must not be relied upon to provide accurate navigation information. AIS is not a replacement for vigilant human lookouts and other navigation aids such as RADAR. Also, take note that not all vessels will have an AIS transceiver turned on, or installed. The performance of the transceiver may be seriously impaired if not installed as instructed in the user manual, or due to other factors such as weather and or nearby transmitting devices.

Important information for US customers

There are specific laws in the USA regarding the configuration of AIS class B transceivers. If you are a US resident and intend to use your AIS class B transceiver in US waters, you should make sure that your retailer has configured your product prior to supplying it to you. If your AIS transceiver has not been pre-configured, please contact your dealer for details of how to have it configured.

Contents

16 Getting started
17 How to display and navigate menus
19 LCD functions
20 Keypad functions
23 Wired Handset Numeric Keys

25 Radio menus
25 Menu tree
27 Scan
28 Watch
29 Voice recorder
29 Display
31 Radio setup
36 DSC/ATIS setup
38 AIS setup
41 Alarms
43 Handsets
45 Using the wireless handset
46 Diagnostics
48 Reset

49 DSC call menu
49 DSC Calls
52 Track buddy
53 Contacts
53 Call logs

55 AIS menu (NRS-2 only)
55 About AIS
55 AIS receiver function
55 AIS transmitter function
56 AIS information and display

59 Fog Horn, Intercom, and Hailer
59 Using the FOG Horn
60 Using the INTERCOM (IC)
60 Using the HAILER
60 Using ANNOUNCE

61 My channels

62 Shortcuts
62 Add/Edit Shortcuts

63 MOB and NAV functions
63 Man Over Board (MOB)
64 Navigation Function (NAV)

65 Installation
65 What's in the box
67 Mounting guidelines
67 Mounting the Blackbox
69 Mounting the CR100 fixed handset cradle
70 Mounting the handset cable connector
70 Mounting the BC-12 wireless handset cradle
71 Mounting the Speaker
74 Mounting the GPS-500 antenna
75 Wiring guidelines
76 Blackbox connector details
81 Remote mounting the wireless antenna - ST method (optional)
82 Remote mounting the wireless antenna - RA method (optional)
83 Wiring diagram
84 First time startup configuration

86 VHF Radio Help and Troubleshooting Guide
86 Software updates
86 Factory Reset
86 System Diagnostics screens
86 My VHF shortcut

87 Power LED
87 AIS LED (NRS-2 only)
87 AIS Pop-up warning messages (NRS-2 only)
88 Troubleshooting

93 RS100/B, V100/B Specifications
93 System features
93 Technical
95 VHF Transceiver
95 VHF Transmitter
95 VHF Receiver
96 AIS (Class-B) (NRS-2 only)
96 Built-in GPS Receiver
96 Wireless specifications
97 HS100 / H100 - Fixed handset
97 HS40 / H60 - Wireless handset
97 Handset cradle charger (BC-12)

98 Channel charts
98 EU and International channel chart

114 Dimensional drawings
114 NRS-1 and NRS-2 Blackbox
114 HS100 and H100 Fixed Handset
115 SP100 Speaker
115 Handset Cradle (CR100) / Charger (BC-12)
116 HS40 / H60 Wireless Handset

117 Appendix
117 Country settings table
119 NMEA 2000® compliant PGN list

1 Getting started

The RS100 / V100 system provides the following features:

- Up to 4 wired alphanumeric handset stations
- Up to 4 wireless handsets (HS40/H60)
- 4 configurable 4 W wired speaker outputs
- Built-in GPS processor for connection with an external GPS antenna
- Audio Playback function
- Intercom, Fog Horn, and Hailer functions
- Man Over Board (MOB) function
- Navigation (NAV) function
- TRI key to select DUAL/TRI scan
- Dedicated Wx (Weather) key
- Favorite channels list to build your list of commonly used channels
- Shortcuts list to build your list of commonly used radio features
- Access to all currently-available marine VHF channel banks (USA, Canada, International) including weather channels where available (country mode dependent)
- Dedicated CH16/9 key for quick access to the priority (international distress) channel
- DSC (Digital Selective Calling) capability that meets Global DSC Class D Standards
- DISTRESS call key to automatically transmit the MMSI and position
- ATIS facility for inland waterways (EU country mode)
- With DSC Auto-Switch disable and DSC Test function
- Contacts list that stores up to 50 contacts with MMSI numbers
- Contacts list that stores up to 20 groups with MMSI numbers
- Group Call and All Ships Call facility
- Specific Area Message Encoding (SAME) (US country mode)
- Weather alert facility where available (US country mode)
- Prominent channel display
- Adjustable contrast and brightness settings for the LCD
- Inverting backlight for night-time use
- Choice of High (25 W) or Low (1 W) transmission power
- GPS latitude and longitude (LL) and time display (with valid GPS source)

The RS100-B / V100-B provides the following additional features:

- AIS dual channel receiver to receive and display AIS targets
- AIS Class-B Transmitter to transmit your vessels position and details - requires additional VHF antenna to be installed.
- Other System features listed in the "RS100/B, V100/B Specifications" on page 93.

How to display and navigate menus

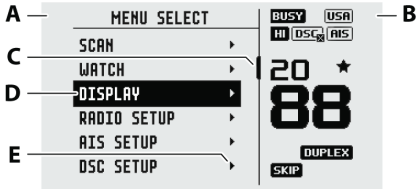

A Split screen display: Main Menu - select an option from the Menu to setup or modify settings.

B Split screen display: Channel region - displays the radio frequency information.

C Scroll bar indicates additional options above or below displayed Menu text.

D Current menu item selected is highlighted.

E Arrow indicates additional sub-menu items for the menu option.

→ ***Note:*** Press the X/POWER key to step backwards to the previous menu page, or exit the menus completely. Press the OK/HL key to make selections in the menu.

Entry of alphanumeric data

Press the ▲ and ▼ keys to scroll through the alphanumeric characters, or use the keypad on the wired handset to enter text (i.e, press the 5 key 2 times to enter the letter K).

Press the **OK/HL** key, to select and step to the next character.

Press the **DSC/MENU** key to step backwards.

Press the X/POWER key to cancel entry and return to previous menu.

LCD symbols and meanings

When the system starts up, a splash screen momentarily displays the brand, model, country mode, software version, and MMSI.

During normal operation, the following icons may be displayed on the screen depending on setup:

Symbols	Descriptions
TX	Radio is transmitting
BUSY	Receiver busy with incoming signal
LO	Low Transmit power selected (1W)
HI	High Transmit power selected (25W)
DUPLEX	Current channel is Duplex (Simplex when OFF)
RX ONLY	Current channel is receive only
LOC	Local mode enabled (used when in areas of high radio traffic, i.e. inner harbor)
★	Channel is saved as a favorite
SKIP	Channel will be skipped during a scan
WX	Weather channel stored by user (EU & INT country modes only)
USA	Channel bank is set to USA
INT	Channel bank is set to International. (Channels available depends on selected country mode)
CAN	Channel bank is set to Canada
ATIS	ATIS functionality is enabled (EU country mode only - must be enabled when in European inland waterways)
DSC	DSC functionality is enabled
DSC	DSC functionality is enabled, auto switch is turned OFF
AIS	AIS function is enabled - Receive only mode (NRS-2 only)
AIS	AIS Class-B function is enabled – Transmit and Receive mode (NRS-2 only)
AIS	AIS Class-B Silent Switch mode is active – AIS transmissions are disabled (NRS-2 only)
GPS	Internal GPS is enabled, with valid 3D fix
GPS	Internal GPS is enabled, no fix
GPS	External GPS is enabled, with valid 3D fix
GPS	External GPS is enabled, no fix
	Weather alert enabled (USA/CAN only)
	Missed DSC call
	Low Battery (vessel) warning (activates at 10.5 V)
	Battery level (wireless handset)
TYB	Track your Buddy feature is active
TRI	TRI watch or DUAL scan is active
SIM	GPS simulator is active

LCD functions

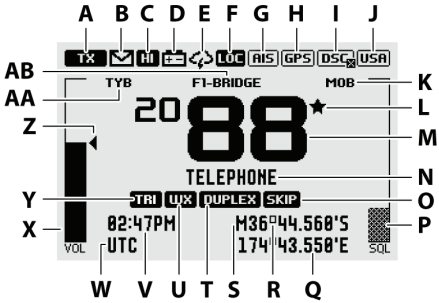

A Radio is Transmitting (TX) mode. Will change to BUSY when receiving
B Missed call in the DSC call log
C Channel is set to high power transmit
D Low vessel voltage alert
E Weather alert function is enabled (USA models)
F Sensitivity mode is set to LOCAL
G AIS receiver is enabled (NRS-2 only)
H Internal GPS is enabled, with 3D fix
I DSC functionality is enabled, but auto-switch is OFF
J The USA channel bank is active
K MOB waypoint is active
L Current channel saved in 'My Channels'
M Channel number (2 or 4 digits)
N Channel name
O Current channel will be skipped during a scan
P Squelch level indicator (greyed out means control is not active)
Q Longitude
R Latitude
S GPS Manual mode is active
T Current channel is a Duplex channel
U Current channel is set as the Weather channel (use Wx key to select)
V Time (derived from GPS)
W UTC offset is applied
X Volume is under active control (solid black indicates control is active)
Y Current channel is set as the Watch channel (use TRI key to select)
Z Volume level indicator
AA Track your buddy is enabled
AB Handset ID and Name

Keypad functions

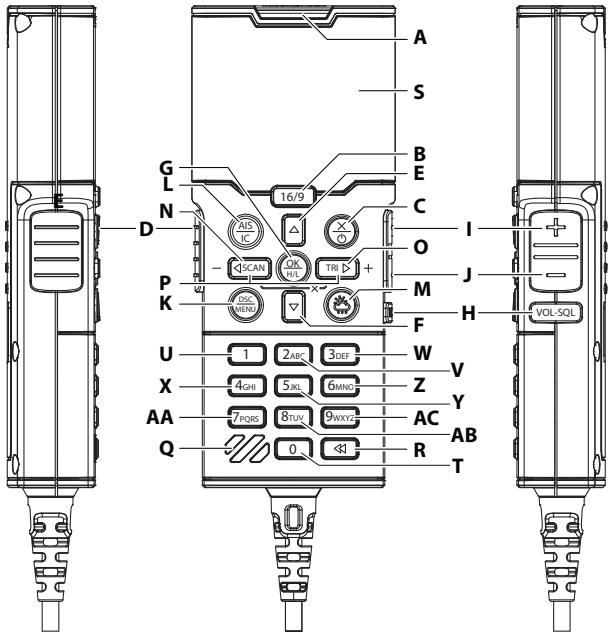

A Distress

A Distress call is broadcast to all DSC equipped radios, so will create an alarm on every DSC radio within range. If position information is available it will be included in the transmission.

Short press to commence a distress call. Nature of the distress can be selected from the list.

Long press to initiate an immediate 'undesignated' distress call.

B 16 / 9

Short press to change to the priority channel CH16. Press again to return to original channel.

Long press to make Channel 09 the priority channel (US/CAN country mode only)

C X / POWER

Short press in menu mode to EXIT when navigating menus, to clear incorrect entries, to exit from a menu without saving changes, and to back up to the previous screen.

Short press in menu mode to change the backlight setting.

Long press to turn the radio system ON/OFF.

→ ***Note:*** The radio system can only be turned ON from any Fixed Handset (F1-F4).

→ ***Note:*** When the system is ON:

- The system can only be turned OFF from the Fixed Handset 1 (F1);
- Long presssing the X key from the handset (F2-F4) will turn that handset OFF;
- Long presssing the X key from the handset (W1-W4) will turn that handset OFF/ON.

D PTT (Push-to-talk)

Press key to transmit. Only depress for duration of message to be broadcast. The radio can't receive while PTT is pressed (transmitting).

E ▲ Channel UP

Short press ▲ increases one channel.

→ ***Note:*** You can also directly select a channel by typing the channel number on the keypad.

Long pressing the key will, after a short delay, step rapidly through the channels.

→ ***Note:*** Also used for menu scrolling, editing, and backlight level adjustment.

F ▼ Channel DOWN

Short press ▼ decreases one channel.

→ ***Note:*** You can also directly select a channel by typing the channel number on the keypad.

Long pressing the key will, after a short delay, step rapidly through the channels.

→ ***Note:*** Also used for menu scrolling, editing, and backlight level adjustment.

G OK / HL

Short press to make selections in menus.

Long press to toggle transmission power between HIGH (25 W) or LOW (1 W) for the entire channel bank. The HI or LO selection is displayed on the LCD.

→ ***Note:*** Some channels allow only low power transmissions. Error beeps will sound if attempting to change the transmission power while on one of these channels.

→ ***Note:*** Some channels allow only low power transmissions initially, but can be overridden to high power by pressing (and holding) H/L after depressing PTT. Keep the H/L key pressed down after releasing the PTT key, if wanting to transmit again on high power.

H VOL / SQL selector

Short press to toggle between Volume or Squelch control. The selected control is indicated by a small triangular arrow above the level bar for each option on the display. Use the + and - keys to adjust.

→ ***Note:*** Volume control is common to internal and external speaker.

Long press to open SHORTCUTS menu.

I +

Short press to increase the selected control (Volume and Squelch).

J -

Short press to decrease the selected control (Volume and Squelch).

K DSC / MENU

Short press to enter the DSC Call Menu and make DSC calls.

Long press to open the MENU SELECT page.

L AIS / IC

Short press to enter the AIS (Automatic Identification System) mode (NRS-2 only; no function on NRS-1). Refer to "AIS setup" on page 38 for AIS setup and functionality.

Long press to enter Intercom / Hailer / Fog Horn / Announce mode.

M Weather

Short press (US/CAN country mode): press to hear the most recently selected NOAA/Canadian weather station. For non US/CAN country modes, changes channel to user programmed choice. When in ATIS mode, will select CH10.

Long press (non US/CAN country mode): to store current channel as the weather, local harbor or preferred channel.

N ◄ / SCAN / -

- Menu mode:

Short press to move the cursor one character to the left

- Normal radio mode:

Short press to enter ALL SCAN mode.

Long press to enter the SCAN menu.

- AIS mode (NRS-2 only):

Short press to decrease (zoom in) the scale of the AIS plotter out one range at a time. The scales available are: 1, 2, 4, 8, 16, 32 nm.

O ▶ / TRI / +

- Menu mode:

Short press to move the cursor one character to the right

- Normal radio mode:

Short press to start DUAL WATCH or TRI WATCH (if 'watch' channel set). Refer to "Watch" on page 28 for more details.

Long press to set the current channel as the watch channel.

- AIS mode (NRS-2 only):

Short press to increase (zoom out) the scale of the AIS plotter in one range at a time. The scales available are: 1, 2, 4, 8, 16, 32 nm.

P MOB (SCAN+TRI)

Long press both keys simultaneously to mark the current location with a Man-Over-Board (MOB) waypoint. Refer to "Man Over Board (MOB)" on page 63 or more details.

Q Speaker and MIC (Microphone)

Location on the handset for the speaker and microphone.

R Voice Recorder Playback

Short press to replay the last 60 seconds of VHF radio traffic

Long press to open the Voice Recorder menu

S LCD (Display)

T Alpha Numeric keypad

Refer to "Wired Handset Numeric Keys", below, for more details.

Wired Handset Numeric Keys

Depending on the mode the radio is in, the numeric keys on wired handsets provide additional functionality.

- **NORMAL mode** - System is in standby:

Short press enters the numeric digit (i.e. channel number).

Long Press opens a pre-determined function or menu.

- **DATA INPUT mode** - Entering data in a menu:

Short press enters the numeric digit. Subsequent presses enters a letter. The displayed letter is accepted after a short pause, or on pressing a different key.

- **INTERCOM mode** - System is in Intercom mode:

Short press makes a direct call to another intercom station.

Key	Mode	Short press	Long press
0	Normal	0	Hailer mode menu
	Data input	0	(blank character/space)
	Intercom	Call all IC stations	All PA announce tone
1	Normal	1	Horn mode menu
	Data input	1	n/a
	Intercom	Direct call to Handset-1	n/a
2	Normal	2	Alarms config. menu
	Data input	2, A, B, C	n/a
	Intercom	Direct call to Handset-2	n/a
3	Normal	3	Speaker setup ON/OFF
	Data input	3, D, E, F	n/a
	Intercom	Direct call to Handset-3	n/a
4	Normal	4	Diagnostics - Handsets
	Data input	4, G, H, I	n/a
	Intercom	Direct call to Handset-4	n/a
5	Normal	5	Position display
	Data input	5, J, K, L	n/a
	Intercom	Direct call to Handset-5	n/a
6	Normal	6	Navigation mode
	Data input	6, M, N, O	n/a
	Intercom	Direct call to Handset-6	n/a
7	Normal	7	Speakers config. menu
	Data input	7, P, Q, R, S	n/a
	Intercom	Direct call to Handset-7	n/a
8	Normal	8	AIS Silent mode menu
	Data input	8, T, U, V	n/a
	Intercom	Direct call to Handset-8	n/a
9	Normal	9	My channels
	Data input	9, W, X, Y, Z	n/a
	Intercom	n/a	n/a

2 Radio menus

Menu tree

Long press the DSC/MENU key to open the main Menu page.

The following shows the available menu and submenu options:

➔ ***Note:*** Main (first) level and 2nd level only.

Key definition:

(☐) - a checkbox in the menu option.

➔ ***Note:*** If the menu option is selected, the checkbox has an X in it; if not selected, the checkbox will be just an empty square. See example images in the "Edit my channels" on page 28.

(>) - means further submenu options available.

Menu	Submenu	Option	Notes
Scan	ALL SCAN		
	ALL CHANNELS + 16		
	MY CHANNELS		
	MY CHANNELS + 16		
	EDIT MY CHANNELS	(Choose channels)	
Watch	DUAL WATCH		US/CAN country modes
	TRI WATCH		
	SET WATCH CHANNEL	(Choose channel)	
Voice recorder	PLAYBACK	(>)	
	RECORDER	(>)	
Display	TIME DISPLAY	(ON/OFF)	
	POS DISPLAY	(ON/OFF)	
	COG/SOG	(ON/OFF)	
	BACKLIGHT	BACKLIGHT LEVEL	
		NETWORK CONFIG	
	CONTRAST	(0-10)	

Radio setup	SENSITIVITY	(DISTANT/LOCAL)	
	UIC	(USA/INT'L/ CANADA)	US/CAN & INT country modes
	POWER OUTPUT	(HIGH/LOW)	
	CH NAME	(>)	
	KEY BEEP	(0-10)	
	UNITS	(>)	
	HANDSET SPEAKER	(ON/OFF)	
	EXTERNAL SPEAKER	(>)	
	GPS	(>)	
	COM PORT	(>)	
	TIME	(>)	
	VESSEL CALL SIGN	(>)	
	AUTO POWER ON	(AUTO/MANUAL)	
	MENU TIMEOUT	(NONE/5 MINS / 10 MINS / 15 MINS)	
DSC setup	DSC FUNCTION	□	
	USER MMSI	(>)	
	ATIS FUNCTION	□	EU country modes
	SEA/INLAND USE	(SEA/INLAND)	EU country modes
	ATIS MMSI	(>)	EU country modes
	INDIVIDUAL ACKNOWLEDGE	(AUTO/MANUAL)	
	POSITION ACKNOWLEDGE	(MANUAL/AUTO/ OFF)	
	AUTO SWITCH	(ON/OFF)	
	TEST ACKNOWLEDGE	(AUTO/MANUAL)	
	RX DISTR WHILE OFF	□	
	DSC TIMEOUT	(>)	

AIS setup	AIS FUNCTION	☐	NRS-2 only
	SILENT MODE	(ON/OFF)	NRS-2 only
	AIS DISPLAY	(MMSI/NAME)	NRS-2 only
	CPA	(>)	NRS-2 only
	TCPA	(>)	NRS-2 only
	CONFIG VESSEL	(>)	NRS-2 only
Alarms	GPS ALERT	(>)	
	WX ALERT	(>)	US/CAN country modes
	DSC ALARM	(>)	
	CPA ALARM	(>)	
Handsets	WIRELESS HANDSET	(>)	
	CONFIGURE HANDSET	(>)	
Diagnostics	GPS STATUS	(>)	
	SYSTEM DIAGNOSTICS	(>)	
	NMEA2000® STATUS	(>)	
	AIS DIAGNOSTICS	(>)	
	HANDSET STATUS	(>)	
Reset	SELECT REGION/ COUNTRY	SELECT REGION	
	SYSTEM RESET	(YES/CANCEL)	

Scan

This menu is used to access the Scan menu.

→ ***Note:*** Scan menu can also be accessed by short pressing the SCAN key. In the Scan menu, you can choose to scan all channels or selected channels available in the MY CHANNELS list.

→ ***Note:*** Scanning is not available if ATIS mode is turned on.

All scan

Scans all channels cyclically for activity. When a signal is received, scanning stops at that channel and the BUSY icon appears on the screen. If the signal ceases for more than 5 seconds, the scan automatically resumes.

- Press ▲ or ▼ to temporarily skip over (lock out) a busy channel

and resume the scan. The direction selected determines if the scan goes up or down the channel numbers (ie 'forward' or 'reverse'). If it is still busy when the scan completes a full cycle, it will stop again at this channel. Note that it is not possible to skip over the priority channel.

- When stopped on a busy channel, press **OK** to permanently skip over the channel. The SKIP icon will show on the LCD for this channel.
- To cancel a skipped channel, select the channel while in normal mode (non-scan mode) then press the **OK** key - the SKIP icon will disappear. Repowering the radio also restores all skipped channels.
- Press SCAN or X while scanning is active to stop at the current channel and return to normal operation.

All channels + 16

Scans all channels cyclically, but checks the priority channel after every channel step.

My channels

Scans all channels selected in EDIT MY CHANNELS.

My channels + 16

Scans all channels selected in EDIT MY CHANNELS, while also checking the priority channel after every channel step.

Edit my channels

→ ***Note:*** This function is also available as a Shortcut.

Allows creation of a custom list of channels - used in a MY CHANNELS scan.

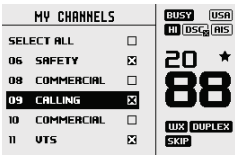

Watch

This menu is for choosing a watch mode to enable, as well as selection of the watch channel. Watch modes can be thought of as a channel scan on a subset of channels, where scanned channels are 'listened' to briefly every 3 seconds, to determine if there is any active radio communication.

→ ***Note:*** Watch modes are not available if ATIS mode is turned on.

→ ***Note:*** Also accessible by short press of the TRI key.

- Without a watch channel the radio will go to DUAL WATCH, where the channels 'watched' are the current channel and the priority channel (the distress channel, CH16 for most countries).
- With a watch channel selected, TRI WATCH is enabled, where the channels 'watched' are the current channel, the 'watch' channel and the priority channel (CH16). If the radio is set to 'Country mode: USA', two priority channels are watched – CH09 and CH16.

Dual watch

Select this to watch the current channel and the priority channel.

Tri watch

Select this to watch the current channel, the user selected 'watch' channel and the priority channel.

Set watch channel

Allows a watch channel to be selected from all available channels. Selected channel is used by TRI WATCH mode.

Voice recorder

This menu allows you to turn the voice recorder ON or OFF and playback the last 60seconds of received VHF audio if set to ON.

Playback

- FORWARD 15S

Skip forward 15 seconds of recorded audio and play.

- REWIND 15S

Skip backward 15 seconds of recorded audio and play.

- END

Cancel playback and revert to previous screen.

Recorder

- ON - Record transmitted and received VHF audio (loop recording last 60 seconds).
- OFF - Disables voice recorder.

Display

This menu allows the user to partially customize the screen information displayed, and adjust the screen for best visibility to suit the user and operating conditions.

Time display

Select ON or OFF to display TIME.

LOC (Local Time) is displayed below the time if a UTC (Coordinated Universal Time) offset has been entered; otherwise UTC is shown.

→ ***Note:*** If turned ON, the display of COG/SOG is turned OFF.

Position display

Select ON or OFF to display POSITION provided from a connected GPS source. If no GPS is connected and a manual entry has been made, the position will be displayed prefixed with an 'M'.

COG/SOG Display

Select ON or OFF to display COG/SOG provided from a connected GPS source.

→ ***Note:*** If turned ON, the display of TIME is turned OFF.

Backlight

Backlight level

→ ***Note:*** This function is also available as a Shortcut.

Select to adjust the backlight level using the ▲ and ▼ keys. Range is 1 to 10. Press DSC / MENU key to activate night mode (inverts display).

Network config

Use this menu to have backlighting adjustments synchronized with other connected devices.

Network group

Set this value to the same as other Simrad®/B&G® devices on the NMEA 2000® network. To keep backlight control independent, set to a value not used elsewhere.

Network offset

Set a backlight offset where the radio display can be brighter or dimmer than other devices on the network while remaining in sync with other devices. Select between -5 (dimmer) to +5 (brighter)

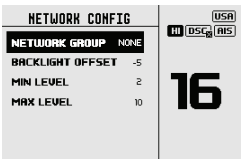

Network min level

Select a minimum level. This is to allow the backlight is always on if the network level is set too low.

Select between 0 to 5.

Network max level

Select a maximum level. This is to ensure the backlight is never too bright if the network level is set too high.

Select between 5 to 10.

→ ***Note:*** Backlight Offset settings relate to the individual handset, not to the system.

→ ***Note:*** If the backlight level is changed on the handset the radio will send the backlight level to the network excluding the offset.

Contrast

→ ***Note:*** This function is also available as a Shortcut.

Select to make adjustment of the screens contrast, using the ▲ and ▼ keys. Range is 00 to 10.

Radio setup

The Radio setup menu covers settings that are typically configured at installation.

Sensitivity

→ ***Note:*** This function is also available as a Shortcut.

Select LOCAL or DISTANT to improve the sensitivity of the receiver either locally (LOCAL) or over distances (DISTANT).

LOCAL is not recommended for use in open sea conditions. It is designed for use in areas of high radio noise; for example, close to a busy port or city.

UIC

→ ***Note:*** This function is also available as a Shortcut.

Select between USA, INT (International) or CAN (Canadian) channel banks. The selected channel bank is displayed on the LCD. For more information about the Channel charts, refer to the relevant chapter in this manual.

→ ***Note:*** UIC is not available in EU country mode.

Power output

Select to toggle between High power (25 W – indicated by HI) or Low power (1 W – indicated by LO) transmission power for the entire channel bank. Low power transmission draws significantly less current (about 1/4) from the battery, so is recommended for short range communication and where battery capacity is limited.

→ ***Note:*** Some channels can't be switched to high power and will show LO regardless of power output setting in menu.

Channel name

→ ***Note:*** This function is also available as a Shortcut.

Allows you the option to edit the channel name descriptions displayed on the screen. Select to edit the description of the channel currently in use. It can be a maximum of 12 characters long.

Key beeps

→ ***Note:*** This function is also available as a Shortcut.

Select to adjust key beep volume.

Volume can be set from 00 - 10 (where 00 is off, and 10 is loudest).

Units

Select SPEED to choose KNOTS, MPH, or KPH.

Select COURSE to choose MAGNETIC or TRUE. A true north heading is corrected for magnetic variation. A magnetic north heading source must also output magnetic variation data if the heading is to be displayed as a true north value.

Handset speaker

→ ***Note:*** This function is also available as a Shortcut.

Select to switch the handset's internal speaker ON or OFF.

Wired speaker

External speaker

→ ***Note:*** This function is also available as a Shortcut.

Select to switch the associated wired speaker(s) ON or OFF.

Speaker config

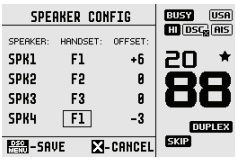

You can associate one or more External speakers to any Fixed handset. For each of the four External speakers select a Handset to be associated with it.

- Press ▲, ▼, ◀, and ▶ to select the HANDSET column and press OK/HL.
- Press the ▲ and ▼ keys to change the handset selection.

External speaker volume tracks the associated handset volume. You can offset the external speaker volume to be louder (positive value) or quieter (negative value).

- Press ▲, ▼, ◀, and ▶ to select the OFFSET column and press OK/HL.
- Press the ▲ and ▼ keys to change the offset between -10 to +10. 0=no offset.

Once Handset and Offset selection is completed, Press the DSC/MENU key to SAVE the selections, or press the X/POWER key to CANCEL without saving.

GPS

Manual

Select MANUAL to enter a GPS position (and time) from another source when radio is not receiving position data from an internal or networked source.

The manually entered GPS position can be used in DSC calls, but not in AIS. AIS will be disabled.

If POSITION display is turned ON, the latitude and longitude are shown on the screen with a prefix 'M' indicating manual entry.

→ ***Note:*** The manual entry is automatically replaced when a real GPS position is received via the NMEA 0183®, NMEA 2000® or Internal GPS, depending on the GPS SOURCE setting.

GPS source

→ ***Note:*** This function is also available as a Shortcut.

Depending on your radio blackbox model, you can select between a Networked GPS source (NRS-1) or Internal GPS source (NRS-1 and NRS-2).

→ ***Note:*** A valid GPS source is required for DSC and AIS functions to operate.

→ ***Note:*** Due to AIS regulations, it is not possible to use a Networked GPS source with an AIS transmitter, so is not available for the NRS-2 model.

Networked (NRS-1 ONLY)

If a networked source is selected, the GPS symbol will be displayed. Once a valid fix is obtained, GPS will be displayed.

- Choose NMEA 2000® for GPS via NMEA 2000® network. A list of available devices installed on your NMEA 2000® network will be displayed. Choose AUTO SELECT to pick the best GPS source visible on NMEA 2000® or select any other device listed.
- Choose NMEA 0183® to have the radio listen for GPS data on its serial NMEA 0183® port.

Internal (NRS-1 AND NRS-2)

If an external GPS source is not available, select the internal GPS system, indicated by the GPS icon. Once a valid fix is obtained, GPS will be displayed.

→ ***Note:*** A GPS-500 GPS Antenna must be connected to the GPS port on the blackbox.

GPS SIM

Select to toggle ON or OFF.

Whenever the GPS Simulator is turned ON, simulated Speed Over Ground (SOG), Course Over Ground (COG), and LL position appear on the screen. This is for the purpose of demonstration only. The SIM icon is displayed to warn the user it is in this mode.

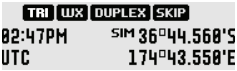

→ ***Note:*** It is not possible to send a DSC transmission or use AIS when in Simulator mode.

→ ***Note:*** The GPS Simulator is set to OFF whenever the radio has the power cycled, or real GPS data is available.

COM port

The NMEA 0183® COM PORT is used by the radio to send and receive data. This is a global setting for the radios GPS, DSC and AIS functions. Supported NMEA 0183® messages are listed in the Specifications section of this manual.

Baud rate

Select 38400, or 4800 BAUD.

→ ***Note:*** AIS generally requires 38400 Baud. The default setting is 38400, if 4800 is selected, a warning that 'data may be lost' is displayed. (NRS-2 only)

Checksum

Select to toggle ON or OFF. When ON, received NMEA 0183® data is validated. If the checksum does not match, the data will be ignored.

When OFF, data is accepted with no tolerance to data corruption.

Time

Time offset

→ ***Note:*** This function is also available as a Shortcut.

Select TIME OFFSET to enter the difference between UTC and local time in 15 minute increments with a maximum offset of ±13 hours.

→ ***Note:*** Does not automatically adjust for Daylight Savings Time.

Time format

→ ***Note:*** This function is also available as a Shortcut.

Select to toggle between 12 and 24 hour format.

Vessel call sign

Select to enter vessel call sign. Used by the MOB and AIS functions.

Auto power ON

Select AUTO for the radio to always turn ON when power is applied to the radio. If OFF, the radio must always be turned on manually.

Menu timeout

An inactivity timeout can be set to return the radio to normal operational mode after a period of inactivity while the radio is displaying a menu. Select between NONE, 5 MINS, 10 MINS, and 15 MINS. (default is 10 MINS).

→ ***Note:*** A different timeout is used when the radio is left in a DSC call.

Refer to "DSC timeout" on page 38 for more details.

DSC/ATIS setup

DSC function

→ ***Note:*** This function is also available as a Shortcut.

It is recommended that DSC functionality is always enabled, unless operating the vessel in an ATIS region. When enabled, the DSC symbol is displayed.

→ ***Note:*** An MMSI number must be entered in radio before the DSC function can be enabled.

User MMSI

Enter an MMSI number to access the radio's DSC functionality. This unique identifier must be supplied by a local radio spectrum authority. DO NOT enter a random 'made up' number.

→ ***Note:*** Contact a Simrad® or B&G® dealer if you need to change your MMSI after initial input.

ATIS function (EU country mode only)

ATIS must be enabled when navigating inland waterways in signatory countries of the RAINWAT agreement. It should NOT be used outside these regions. When enabled, the ATIS symbol is displayed and CH10 is automatically selected.

→ ***Note:*** DSC functionality is disabled when ATIS is turned ON.

Sea/Inland use (EU country mode only)

→ ***Note:*** This function is also available as a Shortcut.

Toggles between DSC (Sea) and ATIS (Inland) modes. Does not allow both to be selected at the same time.

ATIS ID (EU country mode only)

Enter an ATIS number to access the radio's ATIS functionality. This unique identifier must be supplied a local radio spectrum authority. DO NOT enter a random 'made up' number.

→ ***Note:*** Contact a Simrad® or B&G® dealer if you need to change your ATIS ID after initial input.

Individual acknowledge

The radio can be configured to automatically acknowledge an incoming 'individual' call, or require manual intervention:

Auto

After a 15 second delay, radio will switch to requested channel, and send an automatic acknowledgement, ready for conversation.

Manual

Operator must manually choose to send acknowledgement as well as change to requested channel.

→ ***Note:*** Only applies to call type 'Individual'.

Position acknowledge (request)

The radio can be configured to automatically acknowledge an incoming 'position request' call, or require manual intervention to acknowledge, or ignore the call:

Auto

Sends current position automatically to calling radio.

Manual

Operator must manually choose to send position information.

OFF

All incoming position requests are ignored.

Auto switch (channel)

When an All Ships or Group DSC call is received, it may include a request to change to a specific channel for subsequent communications.

With AUTO SWITCH set to ON:

The radio will switch channels after a 10 second delay. The radio will also display options to switch immediately, or reject the request and stay on the current channel.

With AUTO SWITCH set to OFF:

- The following symbol will be displayed: DSC
- Any channel change request will require manual confirmation.

Test acknowledge

The radio can be configured to automatically acknowledge an incoming test call, or require manual intervention:

Auto

The DSC test call is automatically acknowledged after a 10 second delay.

Manual

Operator must manually choose to send acknowledgement, or cancel.

Receive distress while OFF

Enabling this feature will allow the radio to raise an alert for DSC distress calls, even when the DSC feature is turned off. This works regardless of whether or not an MMSI number has been entered.

DSC timeout

An inactivity timeout can be set to return the radio to normal operational mode after a period of inactivity while the radio is engaged in a Distress or non-Distress DSC call:

Distress

Select between NONE, 5 MINS, 10 MINS and 15 MINS. (default is NO TIMEOUT).

Non distress

Select between NONE, 5 MINS, 10 MINS and 15 MINS. (default is 15 MINS).

AIS setup

→ ***Note:*** This section relates to systems using the NRS-2 blackbox only.

The NRS-2 blackbox radio is equipped with an AIS CLASS-B CS transceiver that can receive information from other vessels transmitting AIS data and transmit your own vessel's AIS data.

→ ***Note:*** A separate VHF/AIS antenna must be installed and connected to the AIS Antenna socket on the blackbox. Refer to "Wiring diagram" on page 83 for the installation details.

AIS function

Select the checkbox to enable AIS functionality. When enabled, the AIS symbol is displayed as follows:

- AIS AIS receive only mode.
- AIS AIS Class-B transmit and receive mode.

Silent mode

→ ***Note:*** This function is also available as a Shortcut.

When ON, AIS transmissions are paused, this is indicated by AIS you will still receive AIS traffic. Select OFF to resume AIS transmit mode. Silent mode can also be activated from your Simrad®/B&G® MFD, or by hardwired switch connected to the NRS-2 Blackbox AUX terminal.

AIS display

→ ***Note:*** This function is also available as a Shortcut.

When viewing the AIS plotter screen, AIS targets can be displayed with the vessels NAME or the vessels MMSI.

CPA

Set the Closest Point of Approach (CPA) distance for CPA ALARM.

CPA is the minimum distance between you and a target vessel calculated on the current speed and course. You can set the minimum distance in 0.1 NM increments between 0.1 NM to 25.1 NM.

→ ***Note:*** You must have CPA ALARM set to ON in the ALARMS menu to be alerted. If set to OFF, there will be no CPA alarms regardless of the above settings.

TCPA

Set the Time to Closest Point of Approach (TCPA) interval. TCPA is the minimum time to reach the CPA distance before the CPA alarm is activated. You can set the minimum time in 30 seconds increments between 1 MIN to 30 MIN.

Config Vessel

Enter vessel static data details to be transmitted by AIS. The NRS-2 will enter Class-B transmit mode once the minimum requirement of an MMSI number is entered and a valid GPS fix is obtained. Transmitted data at this stage will be: MMSI, LAT, LON, SOG, COG and HDG if available.

Additional Vessel data will be transmitted once these details are completed.

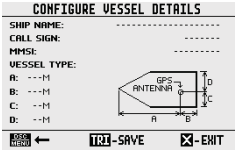

Ship name	Enter the ship's name; maximum 20 alpha-numeric characters.
Call sign	Enter your VHF radio call sign – this must be supplied from your local radio spectrum authority. Will automatically show if it was entered during the initial startup of the radio.
MMSI	Your DSC MMSI number. Will automatically show if it was entered during the initial startup at first turn on of the radio, or during DSC setup.
Vessel type	Scroll through the list to best select your vessel type.
A	Enter the dimension in meters from the bow to the center of the vessels GPS antenna.
B	Enter the dimension in meters from the stern to the center of the vessels GPS antenna.
C	Enter the dimension in meters from the port side to the center of the vessels GPS antenna.
D	Enter the dimension in meters from the starboard side to the center of the vessels GPS antenna.

➔ ***Note:*** Dimensions A + B, or C + D cannot = 0.

Use the ▲ and ▼ keys to select a field and then press OK to select. Press ▲ / ▼ to then select a character then press OK to select. The cursor will move to the next digit.

Once you are satisfied all details are entered correctly, press:

- TRI key to save the details; OK again to confirm save, or,
- X key to exit and not save; X again to confirm exit without saving the details.

➔ ***Note:*** Each field can only be entered once so ensure the details are correct before selecting Save.

➔ ***Note:*** Once all AIS fields are completed, the menu 'Config Vessel AIS static data' will then change to 'View Vessel details (AIS static data)' and you will only be able to view AIS details.

View vessel details (AIS static data)

Once all Vessel Details fields are entered and saved, select View Vessel Details to view the AIS static data details.

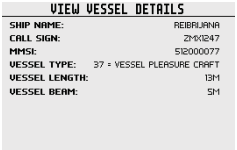

→ ***Note:*** Contact a Simrad® or B&G® dealer if you need to change the vessel details after saving.

Alarms

The radio provides audible and visual alerts for critical functions. Alert settings can be adjusted to you convenience.

GPS alert

The GPS alert is a warning to the user that the selected GPS source is not outputting valid position data. It comprises of an audible alarm and visual alarm (screen flash and warning text).

GPS alert function

If set to OFF, there will be no GPS alerts including audible alarm, screen flash, and warning text.

Alert volume

Select between HIGH, LOW, and OFF

Screen flash

Select between ON and OFF

WX alert (US/CAN only)

The WX alert is a warning to the user that a special weather station alert has been received. It comprises of an audible alarm and visual alarm (screen flash and warning text).

WX alert function

If set to OFF, the radio will not respond to weather alerts including automatic switching to the last used weather channel, audible alarm, screen message, and screen flash.

Alert volume

Select between HIGH, LOW, and OFF

Screen flash

Select between ON and OFF

S.A.M.E. Code

The NOAA All Hazards Weather Radio Service (NWR) works in conjunction with the Emergency Alert System (EAS) to issue weather alerts for specific geographic areas or weather warnings. It uses a digital encoding system known as Specific Area Message Encoding (SAME) to broadcast these alerts.

Each transmitter in the NWR network is identified with a unique 6-digit SAME code. Refer to: https://www.weather.gov/nwr/counties.

Select to add a SAME area code.

Select NEW CODE to add a 6-digit code, or select an existing code to Edit, Delete or Select to make the code active.

→ ***Note:*** You must select at least one code for SAME to be active. The radio will sound the weather alarm when it detects a weather alert on the selected weather channel.

DSC alarm

The radio can alert you when a DSC message is received. The alert volume and screen flash for some incoming call types can be altered.

SAFETY, ROUTINE and URGENCY calls can be set individually to:

Alert volume

Select between HIGH, LOW, or OFF

Screen flash

Select between ON or OFF

→ ***Note:*** It is not possible to alter distress call alert settings.

T/CPA alarm (NRS-2 only)

The T/CPA alarm informs the user of potentially dangerous situations where another vessel is calculated to come within a certain distance of your vessel. This value is set in the AIS Setup menu. Refer to "AIS setup" on page 38 for more details.

In this case, the T/CPA calculation deems the vessel UNSAFE and the TCPA Alert is raised.

If set to OFF, there will be no T/CPA alarms regardless of the settings. It comprises of an audible alarm and visual alarm (screen flash and warning text).

CPA alert function

If set to OFF, the radio will not respond to T/CPA alerts including audible alarm, screen message, and screen flash.

Alert volume

Select between HIGH, LOW, or OFF

Screen flash

Select between ON or OFF

Ignore function

When an T/CPA Alert is activated, you have the following options:

- Press X to silence the alert. The T/CPA Alert may activate again if the approaching vessel is still calculated to come within the set distance of your vessel.
- Press DSC/Menu to Ignore any further alerts from this vessel.
- Press DSC/Menu again to confirm.

Ignoring a vessel works by silencing any further T/CPA alerts from the same vessel, regardless if it is still approaching.

However, if the T/CPA calculation status return to SAFE, the ignored vessel status will be cleared. In this case, it is possible to receive a further T/CPA alert from the same vessel.

→ ***Note:*** The alert will sound again after 1 minute if the AIS alarm has not been resolved.

→ ***Note:*** Ignored vessels are reset once the radio is re-powered.

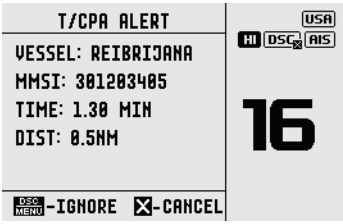

Handsets

The system is capable of supporting up to eight handsets as below:

- Up to Four fixed or wired handsets (FHS)
- Up to Four wireless handsets (WHS).
- Fixed handsets are wired at a position in the vessel, while Wireless handsets provide you with the freedom to operate your radio system remotely as you roam about the vessel.
- FHS's are wired into Handset terminals in the blackbox radio.

- Wireless handsets must initially be paired with the blackbox radio (the Host) through the pairing process. Refer to “Pair a wireless handset” for more details.
- Handsets are provided a handset identification number which is displayed at the top of its screen above the channel number. F1-4, W1-4.
- Handsets can also be named. Giving the handset a name helps in identifying a handset you wish to speak to in Intercom menus. The name appears in handset diagnostics, Intercom menus and at the top of the handset screen.

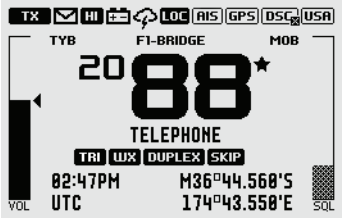

Wireless handset (WHS)

Pair a wireless handset

The pairing process only needs to be performed once per WHS:

1 Ensure the WHS that you want to pair to the radio is charged and turned OFF.

→ ***Note:*** Ensure all other WHS’s remains OFF during this procedure.

2 Access the radio’s Main menu from a fixed handset, and select HANDSETS > WIRELESS HANDSET.
3 Select PAIR A HANDSET. Select YES.
4 Turn ON the wireless handset that you want to pair to the radio. The WHS display will show SEARCHING...
5 Press and hold the SCAN key on the WHS until HANDSET IS PAIRING appears.

→ ***Note:*** The wireless handset will search for the host radio, if it locates the radio it will complete the pairing process within few minutes.

6 Repeat steps 2-5 to pair the next handset.

Remove a WHS

To delete an already paired handset:

1 Select REMOVE A WHS from the WIRELESS HANDSET submenu.
2 Select the handset you want to remove, press the OK key, and select YES.

Locate a WHS

To locate an already paired wireless handset:

1 Select LOCATE A WHS from the WIRELESS HANDSET submenu.
2 Use ◀ and ▶ to select the handset you wish to locate.
3 Press OK. The handset to be located will commence beeping for 30 seconds if it is turned ON within the wireless range.

Configure WHS audio

You can select an option to repeat the audio between the WHS and the host radio.

→ ***Note:*** In some situations, this can result in audio feedback if the wireless handset is too close to the host radio's speakers.

Repeat WHS audio

Select to repeat the wireless handset audio on the host radio.

Repeat Host Radio audio

Select to repeat the host radio audio on the wireless handset.

Configure handset

Select CONFIGURE HANDSET in the menu to assign a name of your handset.

1 Use ◀ and ▶ to select the handset you want to name and press OK.
2 Enter the handset name. To enter a character, refer to "Entry of alphanumeric data" on page 17.
3 Press DSC/MENU to save the name.

Using the wireless handset

Turning the wireless handset ON/OFF

Long press the X key to turn ON the wireless handset. The handset will display the wireless handset's software version and then attempt to reconnect with the host radio. Once connected, use the wireless handset in the same way as you would be using a fixed handset.

Once the wireless handset has been paired to the radio, the screen and key functionality are mimicked on each device.

Most functions that are provided on the radio can be accessed by the wireless handset with the following exceptions:

- SETUP - Some setup functions are not available on the wireless handset.
- HAILER - It is not possible to enter HAILER mode from the wireless handset.

When the wireless handset is not in use, it should be placed back into the charger cradle. The Wireless handset is charged when placed in the cradle via the built-in contactless inductive charging system.

Long press the X key to turn OFF the wireless handset. The handset will automatically turn OFF after 90 seconds of no communication with the host radio.

Diagnostics

The radio comprises diagnostic displays with system data that can be helpful in investigating any issues.

GPS status

→ ***Note:*** This function is also available as a Shortcut.

Select to display the status of the radios internal GPS system.

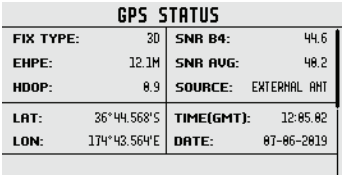

SNR B4: Signal-to-noise ratio of best four satellites in view.

SNR AVG: Averaged Signal-to-noise ratio of all satellites in view.

TIME and DATE: Displayed in GMT.

→ ***Note:*** GPS details will not show if the selected GPS Source is NMEA 2000®, NMEA 0183® or Manual.

System diagnostics

→ ***Note:*** This function is also available as a Shortcut.

Select to view radio, DSC and handset system diagnostics:

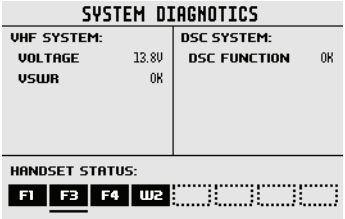

- VOLTAGE: Displays the system voltage at the radio
- VSWR: Tests the Impedance loading on the VHF antenna port each time it transmits. OK if passes, otherwise FAIL – refer to troubleshooting guide.

- DSC FUNCTION: Shows result of DSC hardware self-test performed at power-on. OK if passes, otherwise FAIL – refer to troubleshooting guide.
- HANDSET STATUS:

F1	Fixed Handset installed and turned ON
F2	Fixed Handset installed and turned OFF
F3	This handset
W2	Wireless Handset installed and turned ON

NMEA 2000® status

→ ***Note:*** This function is also available as a Shortcut.

Select to view the NMEA 2000® network diagnostics:

- BUS STATE: Displays if the radio is active on the vessels NMEA 2000® Network
- TX ERRORS: Displays any current transmit errors on the vessels NMEA 2000® Network. Not a cumulative counter.
- RX ERRORS: Displays any current receive errors on the vessels NMEA 2000® Network. Not a cumulative counter.
- RX MESSAGES: Total number of NMEA 2000® messages received on the vessels NMEA 2000® Network since power up.
- TX MESSAGES: Total number of NMEA 2000® messages transmitted on the vessels NMEA 2000® Network since power up.
- BUS LOAD: Displays the total loading on the vessels NMEA 2000® Network.

AIS diagnostics (NRS-2 only)

→ ***Note:*** This function is also available as a Shortcut.

Select to view the AIS diagnostics:

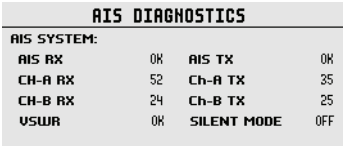

- AIS-RX: Shows result of AIS receiver hardware self-test performed at power-on. OK if passes, otherwise FAIL.
- CH-A RX:, CH-B RX: Displays number of AIS messages received by the dual-channel receiver.
- AIS-TX: Shows result of AIS transmitter hardware self-test performed at power-on. OK if passes, otherwise FAIL.
- CH-A TX:, CH-B TX: Displays number of AIS messages transmitted by the dual-channel transmitter.
- VSWR: Tests the Impedance loading on the AIS antenna port each time it transmits. OK if passes, otherwise FAIL – refer to troubleshooting guide.
- SILENT MODE: If ON, AIS transmissions are paused (silenced). Should normally be OFF.

Reset

Region and Country

Use this setting to change the Region and Country settings this radio is operating in.

→ ***Note:*** Refer to "Country settings table" on page 117 for a listing of the Countries supported. If your Country is not listed, select INTERNATIONAL

1. First select the Region: EUROPE, USA/CAN or INTERNATIONAL
2. Then select the Country within the selected region. If your country is not listed, then select INTERNATIONAL > INTERNATIONAL
3. Once the Country is selected, the radio is restarted.

Reset

Use this setting to return all but the following settings to the factory defaults.

The following customized settings will NOT be changed:

- MMSI / ATIS ID
- AIS settings
- Entries in your buddy list
- Any customized channel names.

3 DSC call menu

Digital Selective Calling (DSC) is a semi-automated method of establishing VHF, MF, and HF radio calls. One big advantage that DSC enabled radios offer is that they can receive calls from another DSC radio without being on the same channel as the calling radio.

Short press the DSC / MENU key for the following options:

- DSC CALLS
- TRACK BUDDY
- CONTACTS
- CALL LOGS

DSC Calls

The calling radio may provide details on what channel to switch to so that voice communication can be established. There are various types of DSC calls; the type of call made determines information sent with the call, and how other radios respond to the incoming call.

There are four DSC call types, as well as related options, that can be accessed from this menu.

INDIVIDUAL

Used to place a call to a single other vessel. The call can be initiated by selecting:

- MANUAL: enter a new vessel's MMSI.
- RECENT: select a vessel in the RECENT list.
- CONTACTS: select an existing vessel already saved in your CONTACTS list.

When the SEND TO page is displayed, use the ▲ and ▼ keys to select the channel to use for voice communication.

DISTRESS

The Distress menu can be accessed from the DSC Calls menu, or directly by the Distress key found on the radio handset.

The nature of the distress call can be selected from the menu list. The selected option will be displayed on other radios receiving the call.

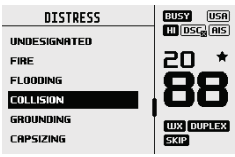

Below are the nature of distress options available in the Distress menu:

- UNDESIGNATED
- FLOODING
- GROUNDING
- SINKING
- ABANDONING SHIP
- MAN OVERBOARD
- FIRE
- COLLISION
- CAPSIZING
- ADRIFT
- PIRACY

→ ***Note:*** Undesignated is the default setting. An undesignated distress call can be sent by lifting the DISTRESS cover and long pressing the Distress key.

Send a distress call using the DSC calls menu

1. Select DSC CALLS, then DISTRESS in the DSC Calls menu.
2. Use the ▲ and ▼ keys to select the nature of distress call from the menu.
3. Long press the Distress key. A 3-second countdown will commence before the call is sent.

Send a distress call using the DISTRESS key

1. Lift the red protective cover exposing the Distress key.
2. Short press the Distress key. Use the ▲ and ▼ keys to select the nature of distress call from the menu.
3. Long press the Distress key. A 3-second countdown will commence before the Distress call is sent.

After the Distress Call is sent, the radio waits for an acknowledgment.

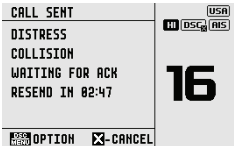

The Distress Call is automatically re-sent every 3.5 to 4.5 minutes until a distress acknowledgement (DISTRESS ACK) is received.

Press the DSC/MENU key for further options:

- RESEND used to immediately resend the Distress Call.
- PAUSE used to pause the automatic Distress Call resend timer.

Once a DISTRESS ACK is received, the alert can be silenced. Press the PTT key and announce the reason of the distress.

The following information (if available) is contained in the Distress Call:

- Nature of Distress (if selected).
- Position information (the latest GPS or manual input position is held for 23.5 hours, or until the power is turned OFF).

Alternatively, to cancel the Distress Call, press the X key and then the DSC/MENU key to confirm. This will send a DISTRESS CANCEL call. You must then press the PTT key and announce the reason for the cancellation.

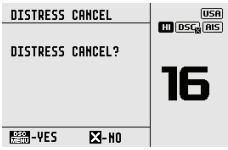

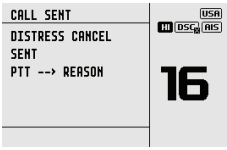

GROUP

Used to place a call to a known group of vessels, all using the same 'Group Call ID' (GCID) number.

The call can be initiated by selecting:

- MANUAL: enter a new GCID
- RECENT: select a group from the RECENT list
- GROUP CONTACTS: an existing group already saved in the GROUP list

When the SEND TO page is displayed, use the ▲ and ▼ keys to select the channel to use for voice communication.

ALL SHIPS

Used to place a non-Distress announcement call to ALL DSC equipped vessels in range. The nature of the call can be either:

- SAFETY: to announce a safety related message, such as obstacles in the water
- URGENCY: to announce a very urgent message.

When the SEND TO page is displayed, turn the channel knob to select the channel to use for voice communication.

POS REQUEST

Used to request a position of another vessel. The call can be initiated by selecting:

- MANUAL: enter a new vessel's MMSI
- RECENT: select a vessel in the RECENT list
- CONTACTS: an existing vessel already saved in your CONTACTS list

POS REPORT

Used to send your vessels position to another vessel. The call can be initiated by selecting:

- MANUAL: enter a new vessel's MMSI
- RECENT: select a vessel in the RECENT list

- CONTACTS: an existing vessel already saved in your CONTACTS list

DSC TEST

Used to place a TEST call to a single other vessel. The call can be initiated by selecting:

- MANUAL: enter a new vessel's MMSI
- RECENT: select a vessel in the RECENT list
- CONTACTS: an existing vessel already saved in your CONTACTS list

MMSI/GPS

Shows your vessels MMSI number and GPS fix information.

This information is also available from the 'My VHF' shortcut

Track buddy

Track Buddy is a useful feature to monitor the locations of up to 5 other vessels (or 'Buddies') in your CONTACTS list. Track Buddy sends recurring DSC position requests at a selectable time interval. As positions are received, they are then displayed on the MFD.

Short press the DSC/MENU and select TRACK BUDDY.

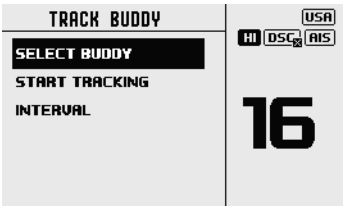

SELECT BUDDY

Shows any existing 'buddies' already selected, and the option to add more. Selecting a 'buddy' already in the buddy list will remove them

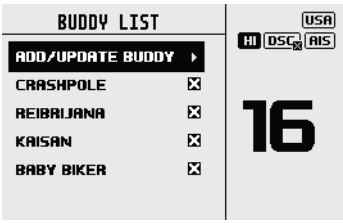

Choose ADD/UPDATE BUDDY to view the full contacts list and choose who to add for tracking.

START TRACKING / STOP TRACKING

→ ***Note:*** This feature is also available as a Shortcut

Select START TRACKING to initiate tracking of buddies in the Buddy list that have been set to tracking ON. The radio will show a screen indicating which buddy is being called. If there is no acknowledgement, the radio will retry the call after a few seconds. Only one retry is made per tracking interval.

If tracking is already taking place, the START TRACKING text is replaced with STOP TRACKING.

INTERVAL

The frequency that 'buddies' are polled with position requests can be selected between: 5, 15, 30 and 60 minutes.

Contacts

Used for the administration and calling of CONTACTS and GROUPS.

VIEW/ADD CONTACT

Use this to create, edit, or delete up to 50 vessel CONTACTS with names and MMSI's. Contacts are stored by name, in alphabetical order.

Select ADD NEW to create a new contact.

Selecting an existing name in the Contacts list gives the options to place a DSC call, make a position request, edit or delete the contact.

VIEW/ADD GROUP

Use this to create, edit, or delete up to 20 contact GROUPS, which are stored in alphanumeric order. Only a name and a Group Call ID (GCID) are required to set up a group. A GCID always starts with 0; the remaining digits can be set to whatever the user desires. All vessels intended to be in the same group must have a suitable DSC radio, and have the identical GCID number entered.

Selecting an existing name in the group list gives the option to edit, delete, or call the group.

→ ***Note:*** Adding a group to this list will in turn make the radio respond to a group call made from any other radio with the same group number in its memory.

Call logs

Shows a record of SENT, RECEIVED, and DISTRESS calls. The number of calls for each category are displayed in parenthesis in the format (viewed / total).

Press OK to select a category:

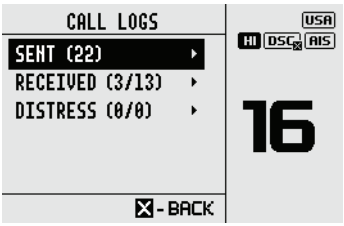

Press DSC/MENU for options:

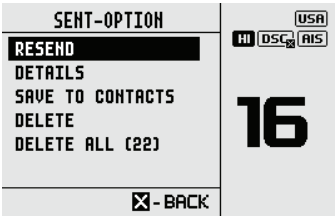

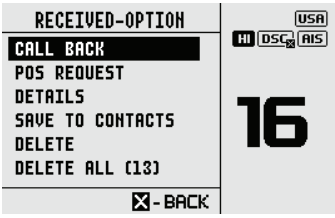

You have several options depending on the selected Call Log:

- RESEND to resend the SENT Call
- POS REQUEST to request a position form the vessel
- DETAILS to view the message details
- SAVE TO CONTACTS to save the contact details to your Contacts list
- DELETE to delete the message
- DELETE ALL to delete All messages in the selected call log.

4 AIS menu (NRS-2 only)

⚠ **Warning:** Valid GPS data must be entered into this radio before the AIS functions can be used. The plotter PPI function will not display targets accurately with incorrect GPS data.

⚠ **Warning:** Take note that not all vessels will have an AIS transceiver installed or turned on, so will NOT be taken into consideration for Collision Avoidance.

⚠ **Warning:** Not all vessels transmit AIS information and therefore will be displayed or listed in the following AIS screens.

About AIS

The marine Automatic Identification System (AIS) is a location and vessel information reporting system. It allows vessels equipped with AIS to automatically and dynamically share and regularly update their position, speed, course and other information such as vessel identity with similarly equipped vessels.

Position is derived from the Global Positioning System (GPS) and communication between vessels is by Very High Frequency (VHF) digital transmissions.

The NRS-2 radio contains an AIS Class-B CSTDMA transceiver. The AIS function requires a separate VHF antenna to be installed and connected to the AIS antenna socket on the NRS-2 blackbox radio.

For installation details, refer to "Wiring diagram" on page 83.

AIS receiver function

Providing that other vessels with AIS transceivers installed are within radio range of your vessel, you should see their details appear on the AIS plotter screen. These details are also repeated on the NMEA® ports for display on a compatible MFD. Specific details of how to configure your MFD to make use of the AIS receiver features are provided in your MFD manual. If you are using charting software running on a PC, refer to the instructions provided with your chart-plotting software for details of how to configure it to display AIS information.

AIS transmitter function

AIS static details must be completed before the AIS transmitter function is enabled. See "Config Vessel" on page 39 for more details.

The AIS icon will change as follows:

AIS	The radio is in AIS receive only mode.
AIS	The radio is configured in Class-B mode and is transmitting your vessels information at a regular period based on AIS Class-B standards. It may take up to six minutes for your full vessel details to be visible to others.
AIS	The radio is configured for Class-B mode, but transmissions are temporarily suspended due to Silent mode is active. Silent mode can be selected on the radio via the AIS Setup menu > SILENT MODE; or via a connected compatible Simrad® MFD.

AIS information and display

AIS vessel information can be displayed on the radios LCD screen:

1 Short press the AIS/IC key to display the AIS plotter screen.

→ ***Note:*** You must have LAT/LON position information for targets to be displayed on the plotter PPI.

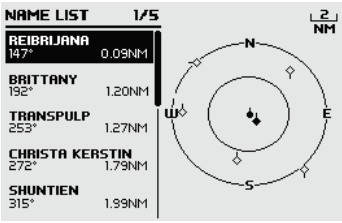

2 AIS target details will be displayed on the left of the screen. Either the vessels name or MMSI will be displayed (if the information is available) depending on the setting you selected in Section "6-2 AIS data display format (AIS DISPLAY)". Also the target's bearing and distance to you are displayed.

→ ***Note:*** It could take some time before AIS targets are displayed.

3 A basic PPI on the right hand side of the LCD shows the location of the AIS targets relative to your position which is in the center of the plotter PPI.

4 Press the Zoom In (SCAN) or Zoom Out (TRI) keys to change the scale of the plotter. The scales available are 1, 2, 4, 8, 16, 32 nm.

5 Use the ▲ and ▼ keys to highlight any AIS target shown on the plotter screen. The selected target will have the target symbol filled in.

6 Press the OK/HL key to view full details of the highlighted target such as MMSI, Vessel name, distance, bearing, heading, ROT, COG, SOG, status and other vessel information that maybe available:

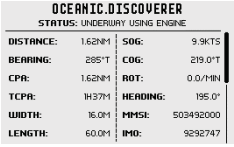

T/CPA Approach Screen

1 When in AIS mode, short press the AIS/IC key again to toggle between the standard AIS screen and the T/CPA Approach screen.

2 In TCPA Approach mode, an approaching AIS Alert target's details are listed on the left side along with its geographical position on the plotter PPI. An AIS Alert target is based on the CPA and TCPA settings in the AIS Setup.

3 The zoom range is automatically selected to the best range according to the selected target on the left.

4 Use the ▲ and ▼ keys to select the target, press OK/HL to display target information, or press X key to return to the previous display.

→ ***Note:*** If the radio detects a TCPA or CPA breach as set in the Alerts menu, the T/CPA Alert screen will automatically pop up with an alert tone. Refer to "T/CPA alarm (NRS-2 only)" on page 42 for more details.

→ ***Note:*** Nautical Miles is the only unit used in AIS mode.

Plotter symbols and meanings

Symbols	Descriptions
	Your vessel is always in the center of the plotter screen, represented by a solid circle with a small protruding line indicating your bearing with respect to North.
	A diamond shape represents all other vessels or targets displayed on the plotter screen. These targets around your vessel are within the current zoom distance setting. The small protruding line indicates the targets bearing.
	When a target is selected, represented by a solid diamond.
Examples:	
	You and the target vessel are heading away from each other.
	You and the target vessel are heading towards each other.

5 Fog Horn, Intercom, and Hailer

→ ***Note:*** An appropriate Hailer speaker must be connected to the Hailer wiring before the HAILER or FOG HORN functions can be used.

Using the FOG Horn

The FOG horn will sound certain international standard fog horn tones through the Hailer speaker depending on the mode selected.

1 Long press the AIS/IC key to enter IC/HAILER mode:

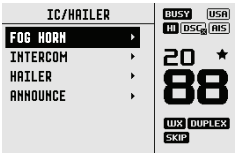

2 Select FOG HORN and press the OK key.

There are 8 choices of internationally recognized fog horn sounds and timing:

Type of Fog Horn	Tone	Occurence
HORN	Horn tone	Manual operation
UNDERWAY	1 long tone	Automatically every 2 minutes
STOP	2 long tones	Automatically every 2 minutes
SAIL	1 long, 2 short tones	Automatically every 2 minutes
ANCHOR	1 long warble	Automatically every 2 minutes
TOW	1 long, 3 short tones	Automatically every 2 minutes
AGROUND	Warble sequence	Automatically every 2 minutes
SIREN	Siren tone	Manual operation

3 Scroll through the menu to select a fog horn type, then press OK to start the selected fog horn sounding. All except HORN and SIREN will sound automatically.

4 The fog horn will sound automatically approximately every two minutes until you press X to cancel it. When the fog horn is not sounding, it is in LISTEN mode.

5 To operate HORN or SIREN, once selected, press and hold the OK key on the handset, or the dedicated Horn Key wired into the blackbox. This will sound as long as the key is pressed. You can then also operate PTT to talk through the Hailer.

6 To change the volume, operate the volume keys to change the volume while sounding.

7 Press X to return to normal radio operation mode

Using the INTERCOM (IC)

Intercom mode allows you to talk directly other handsets in the system. You can choose to talk to All installed handsets, a preconfigured group of handsets or select individual handsets.

→ ***Note:*** The Intercom mode works only when more than one FHS or WHS are installed.

→ ***Note:*** In this mode, Long Press a corresponding Numeric key on a Wired Handset to talk directly to that station.

1. Long press the AIS/IC key and select INTERCOM.
2. Select the station to talk to.
3. Press the PTT key to talk to the handsets. Release the PTT key to hear a reply.
4. Press the X key to quit the INTERCOM mode.

Using the HAILER

The Hailer function allows you to make a high volume announcement using the handset through the Hailer speaker to people or vessels.

The Hailer function also features a LISTEN mode - this mode uses the Hailer speaker as a microphone to listen for a response on the main radio. LISTEN mode is not available on the optional wireless handset.

1. Long press the AIS/IC key to enter IC/HAILER mode.
2. Select HAILER and press the OK key.
3. Press the PTT key to talk through the hailer. Operate the volume keys to change the volume. Volume can only be changed while the PTT key is pressed.
4. Release the PTT key to LISTEN for a response.
5. Press the X key to return to normal radio operation mode.

→ ***Note:*** It is not possible to enter HAILER mode from the optional wireless handset.

Using ANNOUNCE

Announce mode allows you to make an immediate announcement to all installed handsets and wired speakers.

1. Long press the AIS/IC key and select ANNOUNCE.
2. Press the PTT key to announce your message on all handsets, speakers and the Hailer.
3. Press the X key to quit the ANNOUNCE mode.

6 My channels

The MY CHANNELS page is accessed by long pressing the numeric 9 key.

This page provides a shortcut to frequently accessed channels.

The first time this page is opened, the entire channel list is shown so that the desired shortcut channels can be selected.

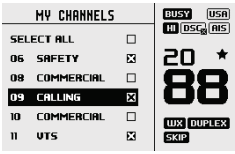

Subsequent opening of this page will show a list of only the selected channels. Choosing one of the channel options immediately exits the page and sets the radio to that channel.

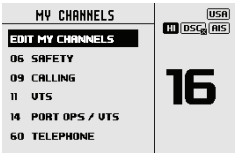

The available shortcut channels can be changed at any time using EDIT MY CHANNELS.

→ ***Note:*** Channels on this list are also used in some SCAN options.

Access to edit the MY CHANNELS list is also available from the SCAN menu.

7 Shortcuts

The Shortcuts page is accessed by long pressing the VOL/SQL selector key.

This page is provided as a shortcut to frequently accessed functions. The shortcut options available on this page are subject to selections made in ADD/EDIT SHORTCUTS.

Add/Edit Shortcuts

Long press the VOL/SQ selector key.

Choose from the list of options which menu options should be added as shortcuts:

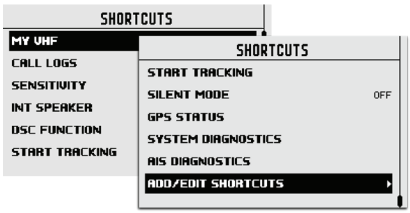

→ ***Note:*** The MY VHF page is available to the operator only when enabled as a shortcut – or by long pressing the **VOL/SQL** selector key.

Its purpose is solely for displaying radio information in one easy to access screen. It provides detail on the MMSI number, GPS data status, Vessel Callsign (if entered), software and hardware version and the radio's serial number.

Once the desired shortcuts have been selected, they are accessible directly from the Shortcuts page:

8 MOB and NAV functions

Man Over Board (MOB)

An MOB is generated by press and hold ◀ SCAN and TRI ▶ keys together.

The screen will change to MOB navigation mode to help navigate back to the MOB location:

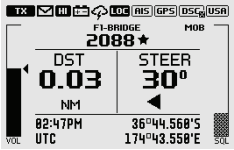

- DST shows the current distance to MOB waypoint.
- STEER shows the current bearing to MOB waypoint direction indicators showing:
  - ◀ for turn to port,
  - ▮ for straight ahead, and
  - ▶ for turn to starboard.

➔ ***Note:*** An MOB waypoint is sent to a connected MFD via NMEA 2000®.

➔ ***Note:*** You can also manually send a MAN OVERBOARD DISTRESS message via DSC. When in DISTRESS, select the MAN OVERBOARD category.

Long press the ◀ SCAN and TRI ▶ keys at the same time to set a new MOB waypoint at the current location. A pop up screen will appear with 2 choices:

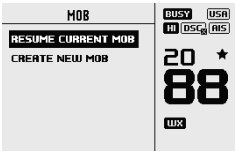

- RESUME CURRENT MOB: to close pop up and resume current MOB navigation.
- CREATE NEW MOB: to cancel current MOB navigation and create a new Man-Over-Board (MOB) waypoint at the current location.

Short press **X/POWER** to close the pop up and resume current MOB navigation.

Long press **X/POWER** to exit MOB navigation. A pop up screen will appear with 2 choices:

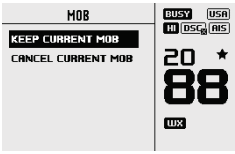

- KEEP CURRENT MOB: to return to normal operation mode without cancelling MOB navigation.
- CANCEL CURRENT MOB: to cancel current MOB navigation and return to normal radio operation mode.

Navigation Function (NAV)

Long press **6** to enter the NAV (Navigation) mode. The screen will change to navigation mode displaying the vessel's current SOG and COG

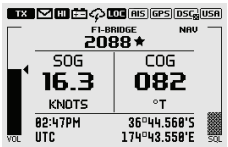

Press the **X / POWER** key to exit NAV mode and return to normal radio operation mode.

9 Installation

What's in the box

The following items should be supplied in the box. Check before starting the installation and contact your dealer if an item is missing.

➔ ***Note:*** A VHF antenna is not provided. Consult your Simrad® or B&G® dealer for advice on selecting the correct antenna for your installation.

➔ ***Note:*** Systems utilizing the NRS-2 Blackbox requires an additional VHF/AIS antenna which is not provided. Consult your Simrad® or B&G® dealer for advice on selecting the correct antenna for your installation.

Blackbox with the following items:

No.		Description	# of items
1		NRS-1 or NRS-2 Blackbox (BB)	1
2		AP-1 Accessory pack: BB Connectors	1
	2.1	2pin green connector (for power & Hailer)	2
	2.2	8pin green connector (for wired speakers)	1
	2.3	8pin green connector (for auxiliary wiring)	1
	2.4	Wireless dipole antenna – SMA	1
	2.5	Spare fuse – 10A – Blade type	1
3		AP-2 Accessory pack: BB mounting kit	1
	3.1	S/S Pan-head self-tapping screw (M4 x 25)	4
	3.2	S/S Pan-head machine screw (M4 x 25)	4
	3.3	S/S flat washer (M4)	4
	3.4	S/S split washer (M4)	4
	3.5	S/S hex nut (M4)	4
4		AP-8 Accessory pack: Cable retainer	1
	4.1	Cable retainer	1
	4.2	S/S Pan-head self-tapping screw (M4x12)	2
	4.3	Wire ties	10
5		System Document pack	1
	5.1	System User Manual	1
	5.2	Quick Start Guide	1
	5.3	System Declaration of Conformity	1
	5.4	Warranty card	1
6		Blackbox Power Cable (1m)	1

Fixed Handset with the following items:

No.		Description	# of items
1		HS100 or H100 Fixed Handset (FHS)	1
2		CR100 FHS Mounting Cradle	1
3		AP-3 Accessory pack: FHS cradle mounting kit	1
	3.1	S/S Pan-head self-tapping screw (M4 x 25)	2
	3.2	S/S Pan-head machine screw (M4 x 25)	2
	3.3	S/S flat washer (M4)	2
	3.4	S/S split washer (M4)	2
	3.5	S/S hex nut (M4)	2
4		CH100-5 FHS Cable (5m)	1
5		AP-4 Accessory pack: FHS cable kit	1
	5.1	Bulkhead mounting plate	1
	5.2	Bulkhead mounting plate rubber gasket	1
	5.3	Cable rubber gasket	1
	5.4	8pin green connector for Handset	1
6		AP-5 Accessory pack: FHS cable mounting kit	1
	6.1	S/S Pan-head self-tapping screw (M3 x 10)	2
	6.2	S/S Pan-head machine screw (M3 x 20)	2
	6.3	S/S flat washer (M3)	2
	6.4	S/S split washer (M3)	2
	6.5	S/S hex nut (M3)	2
7		Warranty card	1

Wired Speaker with the following items:

No.		Description	# of items
1		SP100 Speaker	1
2		Speaker mounting box	1
3		AP-6 Accessory pack: Speaker kit	1
	3.1	Speaker mounting gasket	1
	3.2	Speaker bezels	2
4		AP-7 Accessory pack: Speaker mounting kit	1
	4.1	S/S Pan-head self-tapping screw (M3 x 10)	4
	4.2	S/S Pan-head self-tapping screw (M3 x 40)	4
	4.3	S/S Pan-head machine screw (M3 x 20)	4
	4.4	S/S Pan-head machine screw (M3 x 40)	4

	4.5	S/S flat washer (M3)	4
	4.6	S/S split washer (M3)	4
	4.7	S/S hex nut (M3)	4
5		Warranty card	1

GPS-500 antenna with the following items (NRS-2 Systems only):

No.		Description	# of items
1		GPS-500 GPS antenna	1
2		See documentation provided in the GPS-500 box	

Mounting guidelines

Choose the mounting location carefully, ensuring there are no hidden electrical wires or other parts behind the panel before you drill or cut.

Ensure that any holes cut are in a safe position and will not weaken the boat's structure. If in doubt, consult a qualified boat builder, or marine electronics installer.

→ ***Note:*** If more than one VHF antenna is installed, ensure adequate separation between antennas to prevent antenna cross-talk. This may vary between installations and should be tested before mounting locations are confirmed. Mount units at least 50 cm (1.5 ft) away from a compass to avoid creating magnetic deviation of the compass.

Don'ts:

- Do not mount any part where it can be used as a hand hold, where it might be submerged, or where it will interfere with the operation, launching, or retrieving of the boat.
- Do not install in a hazardous or flammable environment.

Do's:

- Mount to surface areas that are clean with no dirt, old paint, nor debris.
- Mount units at least 1 m (3 ft) away from the VHF antenna.

Mounting the Blackbox

→ ***Notes:*** Allow easy access to the Blackbox for connection to the 12 V DC power supply, the antenna(s), and additional wiring.

- The Blackbox can be positioned vertically on a bulkhead or horizontally. Avoid positions that might get wet or hot, such as in the engine compartment or close to the bilge.
- The Blackbox is not water-proof.
- If mounting the Blackbox vertically, ensure the wiring glands are facing downwards in order to prevent the ingress of water.
- Ensure all cables once fixed in place to do not put any strain or tension on the Blackbox connectors.

> ⚠ **Warning:** Under extreme operating conditions, the temperature of the heat-sink on this radio may reach a surface temperature that is unsafe to touch. Caution is advised to prevent possible skin burns. Good ventilation is required. Choose a location that will not expose the unit to conditions that exceed the specifications. Refer to "Remote mounting the wireless antenna - ST method (optional)" on page 81.

1 Temporary place the Blackbox onto the chosen mounting location and mark the four mounting screw holes.

2 Drill screw holes using a 3.0 mm (1/8") drill bit if using the supplied 4.0x20 mm self-tapping screws; or a 4.1 mm (3/16") drill bit if using the supplied 4.0x28 machine screws.

3 Attach the Blackbox to the mounting location using the supplied self-tapping screws or machine screws..

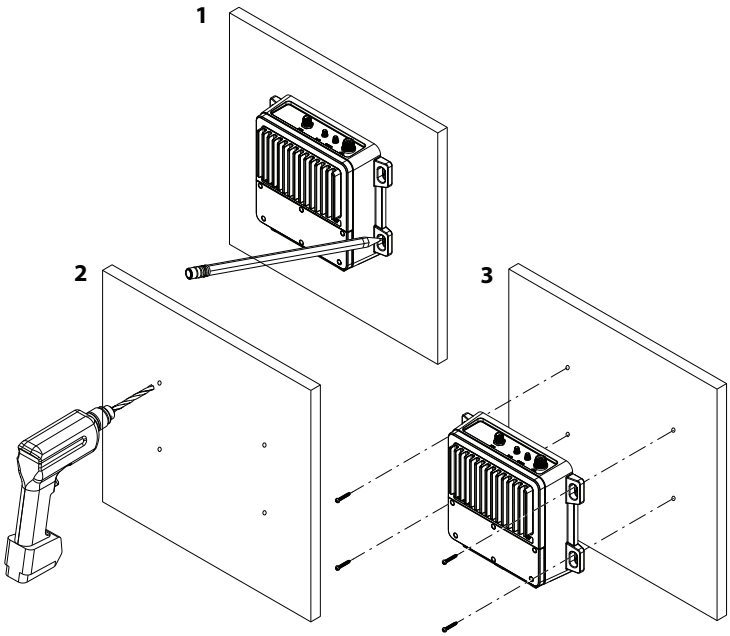

Mounting the CR100 fixed handset cradle

→ ***Notes:***

- The CR100 Fixed handset cradle is a passive unit and does not require a power supply.
- The Fixed handset is provided with a 5m (16.4') handset extension cable. Ensure the chosenlocation is within the length of the installed cable to the Blackbox.
- Longer lengths of handset extension cable is available from your dealer.
- The handset LCD screen has an optimum horizontal and vertical viewing angles within approx.+/-20 deg. Ensure the chosen location provides a suitable view of the display. Ideally, you should bedirectly in front of the display or no more than +/-20 degrees from the front of the display.

1 Temporary place the handset cradle onto the chosen mounting location and mark the two mounting screw holes.

2 Drill screw holes using a 3.0 mm (1/8") drill bit if using the supplied 4.0x25 mm self-tapping screws; or a 4.1 mm (5/32") drill bit if using the supplied 4.0x30 machine screws.

3 Attach the handset cradle to the mounting location using the provided screws.

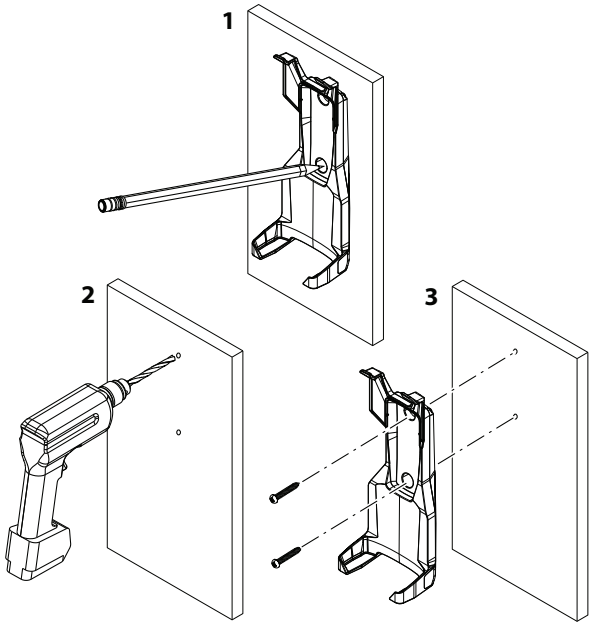

Mounting the handset cable connector

Each wired handset cable includes a connector assembly that must be installed in a bulkhead, dashboard or other suitable panel.

1. Temporary place the plate (**B**) onto the chosen mounting location and mark the two mounting screw holes.
2. Drill screw holes using a 2.5 mm (0.10") drill bit if using the supplied M3x10 mm self-tapping screws; or a 3.1 mm (1/8") drill bit if using the supplied M3x20 machine screws.
3. Measure a 20.0mm (0.79") halfway distance between the two screw holes to find the center of the cable connector hole and cut a 24.0 mm (0.94") diameter hole, allowing space for the cable connector's overall dimensions.
4. Attach the connector cover, plate, and the gasket to the mounting location using the provided screws.

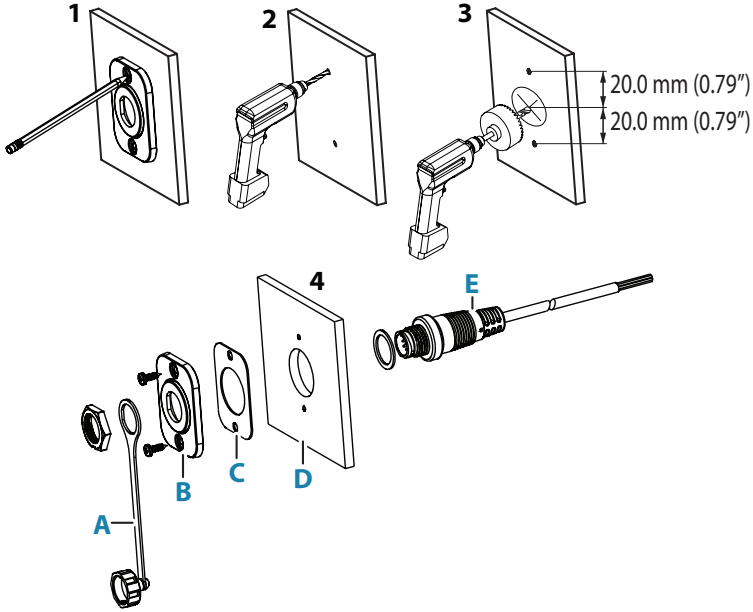

- **A** - Connector cover
- **B** - Plate
- **C** - Gasket
- **D** - Bulkhead
- **E** - Socket body

Mounting the BC-12 wireless handset cradle

→ ***Notes:*** The BC-12 Wireless Handset Cradle requires a +12V DC supply for charging. Ensure the selected location allows for the power wire at the rear of the unit.

- The handset LCD screen has an optimum horizontal and vertical viewing angles within approx. +/-20 deg. Ensure the chosen location provides a suitable view of the display. Ideally, you should be directly in front of the display or no more than +/-20 degrees from the front of the display.

1 Temporary place the handset cradle onto the chosen mounting location and mark the two mounting screw holes.

2 Drill screw holes using a 3.0 mm (1/8") drill bit if using the supplied 4.0x25 mm self-tapping screws; or a 4.1 mm (5/32") drill bit if using the supplied 4.0x30 machine screws. Cut another hole (54.5 mm away from the middle hole) with a diameter of 3.6 mm for the charger cable.

3 Attach the handset cradle to the mounting location using the provided screws.

4 Connect the BC-12 red wire (**A**) to battery (+) via 2A fuse (**D**) (not provided) and optional power switch (**C**). Connect the black wire (**B**) to battery (-).

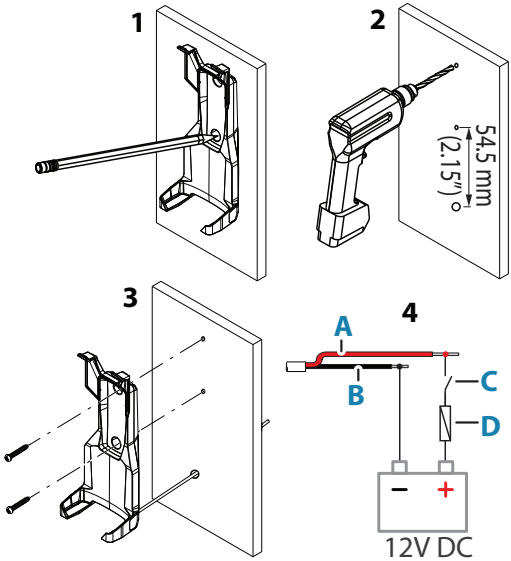

Mounting the Speaker

→ ***Note:*** The wired speaker is provided with a 2m (6.5') fixed cable. The cable maybe extended if necessary using a minimum 14 AWG 2-pair cable.

Flush mounting

1 Cut a 98 mm (3.86") diameter hole in the mounting surface, allowing space for the speaker's overall dimensions.
2 Remove the plastic bezels that cover the screw holes. Temporarily fit the speaker and mark the four screw holes.
3 Drill holes of appropriate size for fasteners to be used.
4 Fit the foam gasket to the rear of the speaker. Apply sealant to the screw holes and secure the speaker.

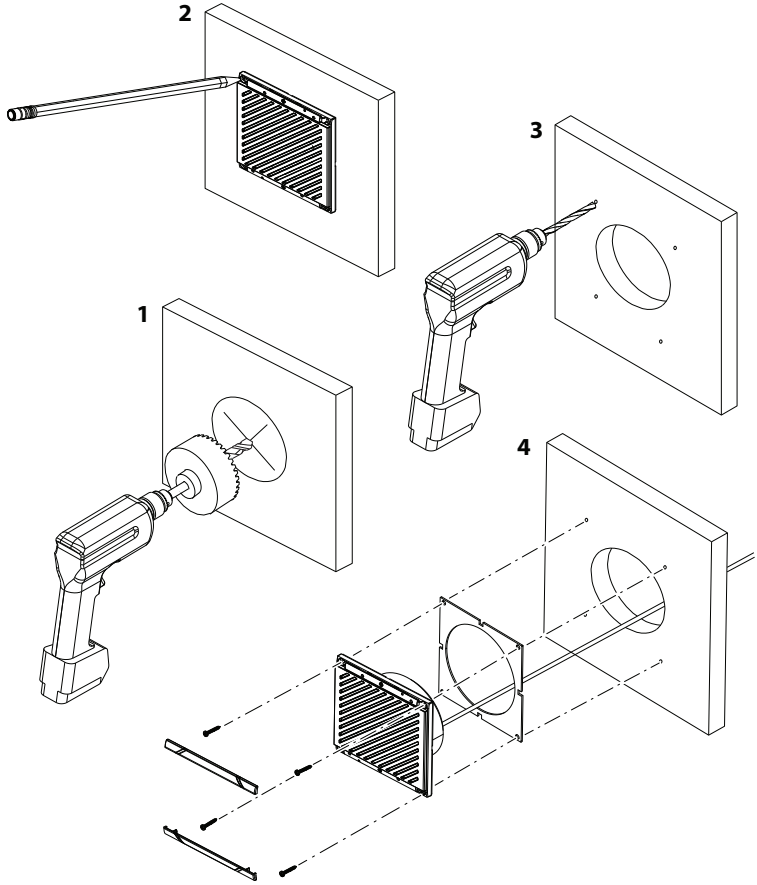

Surface mounting

1 Remove the plastic bezels that cover the screw holes on speaker front. Mark the screw holes using the speaker as the template.
2 Drill holes of appropriate size for the fasteners to be used.
   - Drill a hole in the mounting surface for the speaker wire, ensuring hole is near one of the corner screw holes, to prevent cable pinching under speaker.

3 Feed speaker wire through surface mount box and through mounting surface hole.

- Apply sealant around the cable hole and the screw holes.
- Fix the speaker with fasteners through it and the box.
- Make sure the drain hole in box is oriented to be at lowest side.
- Replace the plastic bezels.

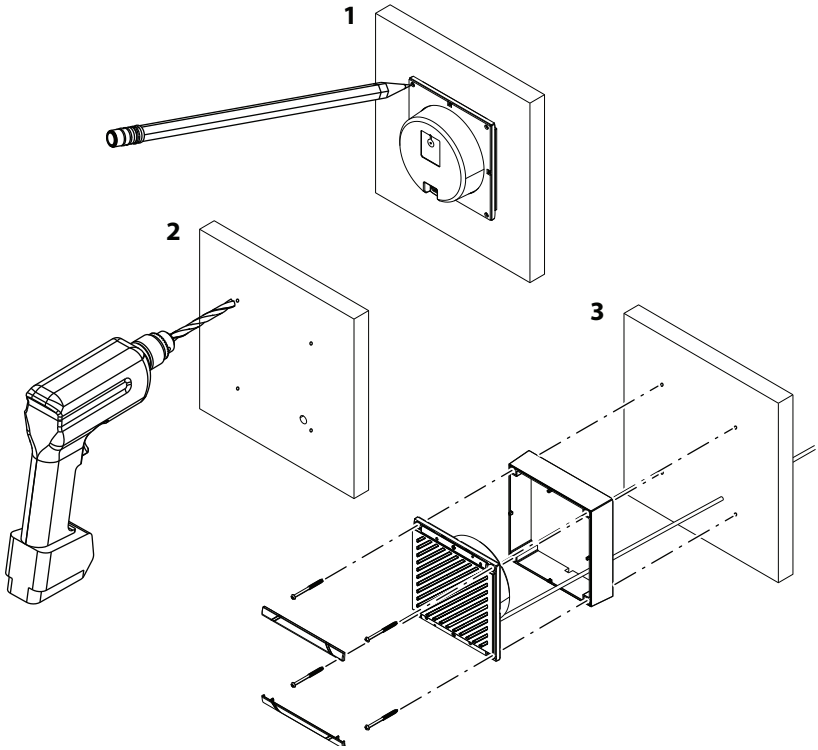

Mounting the GPS-500 antenna

➔ ***Note:*** The GPS-500 antenna is only optional for NRS-1 but mandatory for NRS-2.

- It is not recommended that the GPS antenna is mounted up a mast where the motion of the vessel will cause the antenna to swing and potentially reduce the accuracy of the GPS position.
- Do not mount the GPS antenna within 1 m of a transmitting device.

Mount the GPS-500 externally to either a (A) pole or (B) hard surface then run the cable to the Blackbox. In all cases, ensure the selected location enables the antenna to have a clear, unobstructed view of the sky.

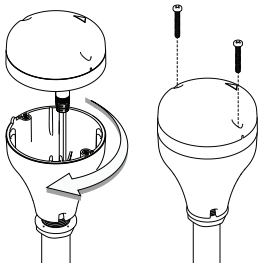

(**A**) *Pole*

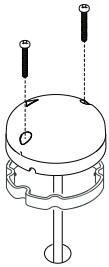

(**B**) *Hard surface*

➔ ***Note:*** To pole mount the external GPS-500 antenna, you will require a 1-inch 14 TPI thread pole:

- Screw the pole adapter onto the threaded portion of the pole.
- Feed the cable attached to the GPS antenna through the adapter and pole.
- Mount the pole into position.
- Fit the GPS antenna to the pole adapter using the 2 small screws.

To surface mount the external GPS-500 antenna, select a flat clean surface area that has a clear view of the sky. Mount the antenna using the supplied gasket and the 2 small screws.

- Mark and drill the 2 mounting holes and a further hole if necessary for the GPS cable.
- Install the gasket by firstly threading the attached cable through the center of the gasket.
- Screw the GPS antenna to the mounting surface.
- Run the GPS cable to the Blackbox.
- Route the cable to the Blackbox, adding any necessary extension cables.
- Connect the cable from the GPS antenna to the GPS connector (SMA) on the Blackbox as described on this manual.

Wiring guidelines

Don’ts:

- Do not make sharp bends in the cables.
- Do not run cables in a way that allows water to flow down into the connectors.
- Do not run the data cables adjacent to radar, transmitter, or large/high current carrying cables or high frequency signal cables.
- Do not run cables so they interfere with mechanical systems.
- Do not run cables over sharp edges or burrs.

Do’s:

- Make drip and service loops.
- Use cable-tie on all cables to keep them secure.
- Solder/crimp and insulate all wiring connections if extending or shortening the cables. Extending cables should be done with suitable crimp connectors or solder and heat shrink. Keep joins as high as possible to minimize possibility of water immersion.
- Leave room adjacent to connectors to ease plugging and unplugging of cables.
- Connect the radio to a 12 V DC, negative ground power supply.

⚠ **Warning:** All wiring on the radio should be done with the vessel power supply turned off. While the radio power is polarity protected, the fuse will blow if the connection is made the wrong way round.

⚠ **Warning:** All cables provided with the system is designed to ensure the systems operates as designed under the stated operating conditions. Ensure that if any wiring is extended, the additional cabling is suitable to meet the system operating requirements.

⚠ **Warning:** A Halier cable is not supplied. If using the Hailer/Fog Horn/Announce function, use a cable with the same profile and conductor size as the supplied power cable.

Blackbox connector details

Wiring receptacles are accessible under the connector cover on the base unit. Remove the 6 screws on the cover plate to expose the wiring connectors:

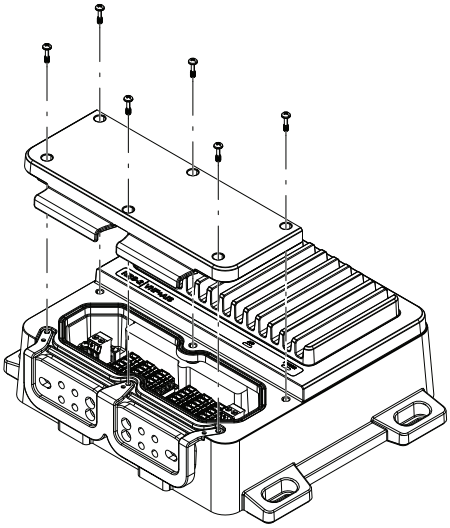

Cable Grommets

There are two cable sealing rubber grommets at the front of the Blackbox. Wires must pass through the allocated slot in the grommet (L1-7 and R1-7) as indicated to create an IPx5 seal.

Slots have a thin rubber membrane to ensure unused slots remain sealed.

Press the wire through the allocated slot to break the seal prior to adding the connector.

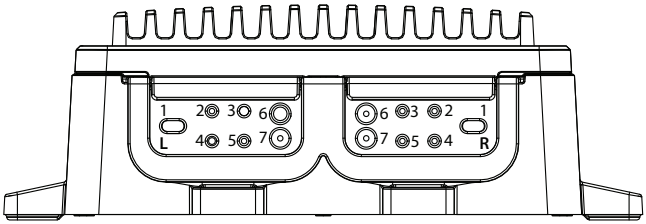

To access the rubber grommets, remove the grommet retainer bracket.

Ensure the grommet retainer and connector cover is replaced once the wiring is completed.

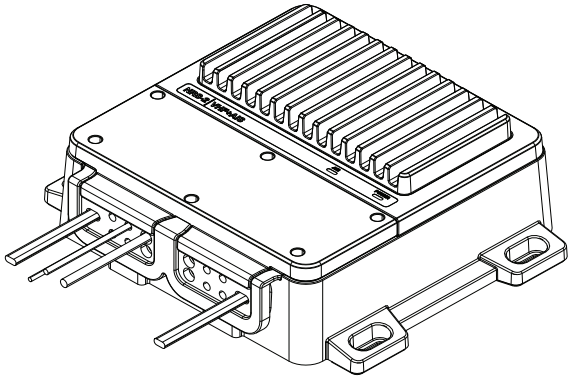

→ ***Note:*** The connectors are color coded to help you with the installation.

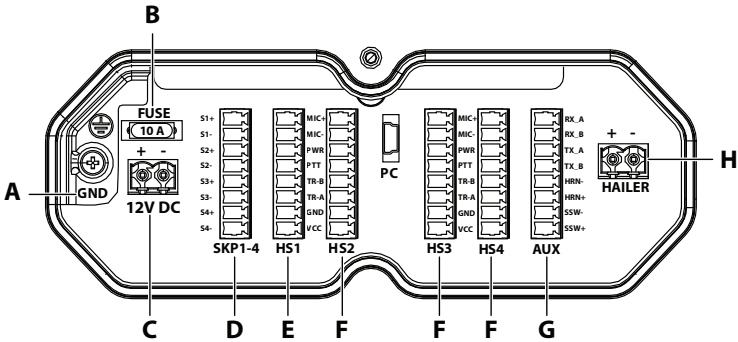

GND (A)

Optional ground connection. May help with induced noise issues. Ring terminal size M3, #5.

FUSE (B)

10 A mini-blade type fuse.

12V DC (C)

Vessels battery **+** and **–** power supply connection:

	+	Red	Connect to vessel's 12 V DC supply, via a switch panel or breaker.	L1
	-	Black	Connect to vessel's DC supply negative.	

SPK1 - 4 (D)

Wired Speakers SPK1-4. Connect (+) Red terminal to speaker (+) and (-) black to speaker (-):

S1+	S1+	RED	External Speaker-1 (+) red wire	L2
S1–	S1-	BLACK	External Speaker-1 (-) black wire	
S2+	S2+	RED	External Speaker-2 (+) red wire	L3
S2–	S2-	BLACK	External Speaker-2 (-) black wire	
S3+	S3+	RED	External Speaker-3 (+) red wire	L4
S3–	S3-	BLACK	External Speaker-3 (-) black wire	
S4+	S4+	RED	External Speaker-4 (+) red wire	L5
S4–	S4-	BLACK	External Speaker-4 (-) black wire	

HS1 (E)

Handset connection. HS1 is the main handset. All systems MUST have HS1 connected. The system can only be turned ON or OFF via HS1; unless AUTO POWER is ON:

MIC+	MIC+	WHITE	Handset white wire	L6
MIC–	MIC-	GREY	Handset grey wire	
PWR	PWR	ORANGE	Handset orange wire	
PTT	PTT	GREEN	Handset green wire	
TR-B	TR-B	BLUE	Handset blue wire	
TR-A	TR-A	YELLOW	Handset yellow wire	
GND	GND	BLACK	Handset black wire	
VCC	VCC	RED	Handset red wire	

HS2-4 (F)

HS2 additional fixed handset (optional). Same wiring as HS1	L7
HS3 additional fixed handset (optional). Same wiring as HS1	R6
HS4 additional fixed handset (optional). Same wiring as HS1	R7

AUX (G)

Auxiliary connections for NMEA 0183®, Horn key and AIS Silent Switch:

RX_A	RX_A	RA	NMEA 0183® TX_A of chart plotter, or GPS data	R2
RX_B	RX_B	RB	NMEA 0183® TX_B of chart plotter, or GPS data	
TX_A	TX_A	TA	NMEA 0183® RX_A of chart plotter	
TX_B	TX_B	TB	NMEA 0183® RX_B of chart plotter	
HRN–	HRN-	H-	HORN. Connect a Normally Open, momentary switch	R3
HRN+	HRN+	H+		
SSW–	SSW-	S-	AIS Silent Switch (NRS-2 only). Connect a Normally Open, latching switch	R4
SSW+	SSW+	S+		

HAILER (H)

Hailer Speaker connection:

+	+	Red	Connect to Hailer speaker (+)	R1
–	-	Black	Connect to Hailer speaker (1)	

Plug-in connections

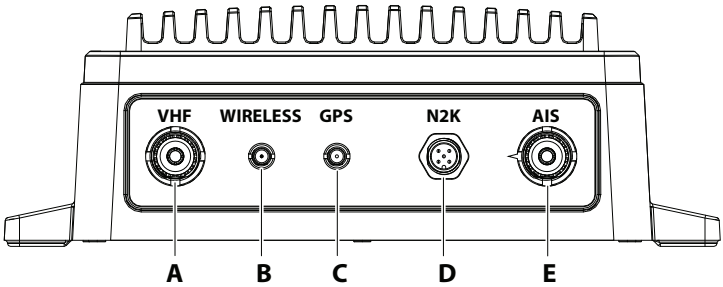

VHF (A)

PL-259: Connect to a marine VHF antenna using the 50-ohm cable fitted with a PL-259 connector.

WIRELESS (B)

RP-SMA: connect the supplied wireless dipole antenna.

Used for communication between wireless handsets.

An optional 6 meter extension cable is available so the dipole antenna can be mounted in a position for better coverage. Refer to "Remote mounting the wireless antenna - ST method (optional)" on page 81

and "Remote mounting the wireless antenna - RA method (optional)" on page 82.

GPS (C)

SMA: for GPS reception (optional for NRS-1, but mandatory for NRS-2). Connect to an external passive GPS-500 antenna.

N2K (D)

NMEA 2000® network connection. For connection to an NMEA 2000® network.

AIS (E)

PL-259: (NRS-2only) for AIS receiving and transmitting. Connect to a marine VHF antenna using the 50-ohm cable fitted with a PL-259 connector.

→ ***Notes:***

- For NRS-2 dual antenna requirements - It is possible to use a single VHF antenna if connected to an NSPL-500 Antenna Splitter. Refer to NSPL-500 instructions for further details.
- Handsets HS2-4, External speaker(s), Hailer and network connections are optional.

Remote mounting the wireless antenna - ST method (optional)

→ ***Note:*** This ST (straight through) method is used for situations where the cable comes from behind the mounting plate (e.g. through a wall).

1. Temporary place the plate (**C**) onto the chosen mounting location and mark the two mounting screw holes.
2. Drill screw holes using a 2.5 mm (0.10") drill bit if using the supplied M3x10 mm self-tapping screws; or a 3.1 mm (1/8") drill bit if using the supplied M3x20 machine screws.
3. Measure a 20.0mm (0.79") halfway distance between the two screw holes to find the center of the cable connector hole and cut a 24.0 mm (0.94") diameter hole, allowing space for the cable connector's overall dimensions.
4. Attach the connector cover, plate, and the gasket to the mounting location using the provided screws.

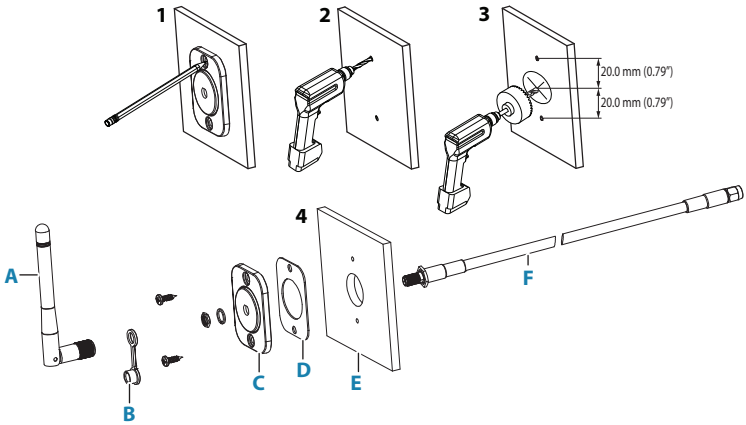

- **A** - Wireless antenna
- **B** - Connector cover
- **C** - Plate
- **D** - Gasket
- **E** - Bulkhead
- **F** - Cable

Remote mounting the wireless antenna - RA method (optional)

→ ***Note:*** This method is using the RA (right angle) adapter for situations where the cable comes from below the mounting plate and to reduce the wireless cable bend radius (e.g. within a wall cavity).

1. Temporary place the plate (**C**) onto the chosen mounting location and mark the two mounting screw holes.
2. Drill screw holes using a 2.5 mm (0.10") drill bit if using the supplied M3x10 mm self-tapping screws; or a 3.1 mm (1/8") drill bit if using the supplied M3x20 machine screws.
3. Measure a 20.0mm (0.79") halfway distance between the two screw holes to find the center of the cable connector hole and cut a 24.0 mm (0.94") diameter hole, allowing space for the cable connector's overall dimensions.
4. Attach the connector cover, plate, and the gasket to the mounting location using the provided screws.

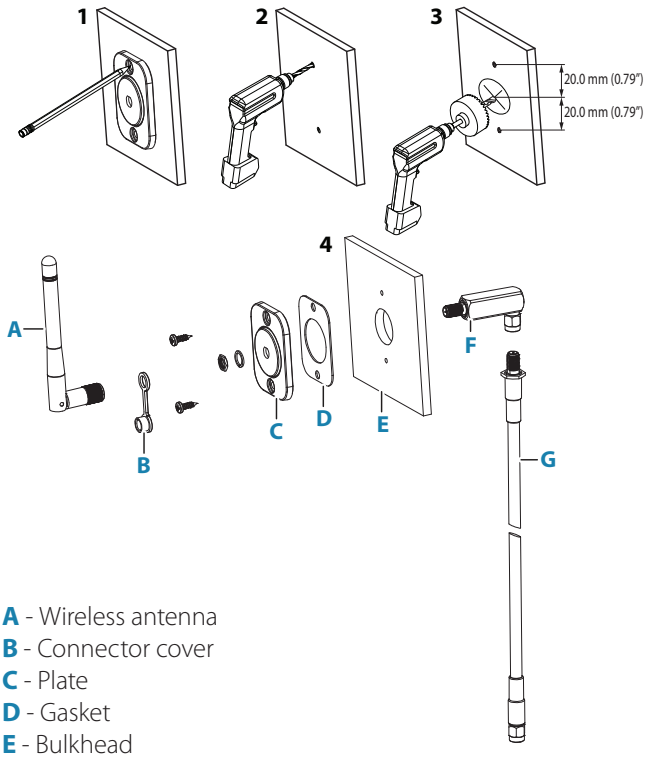

- **A** - Wireless antenna
- **B** - Connector cover
- **C** - Plate
- **D** - Gasket
- **E** - Bulkhead
- **F** - RA SMA adapter
- **G** - Cable

Wiring diagram

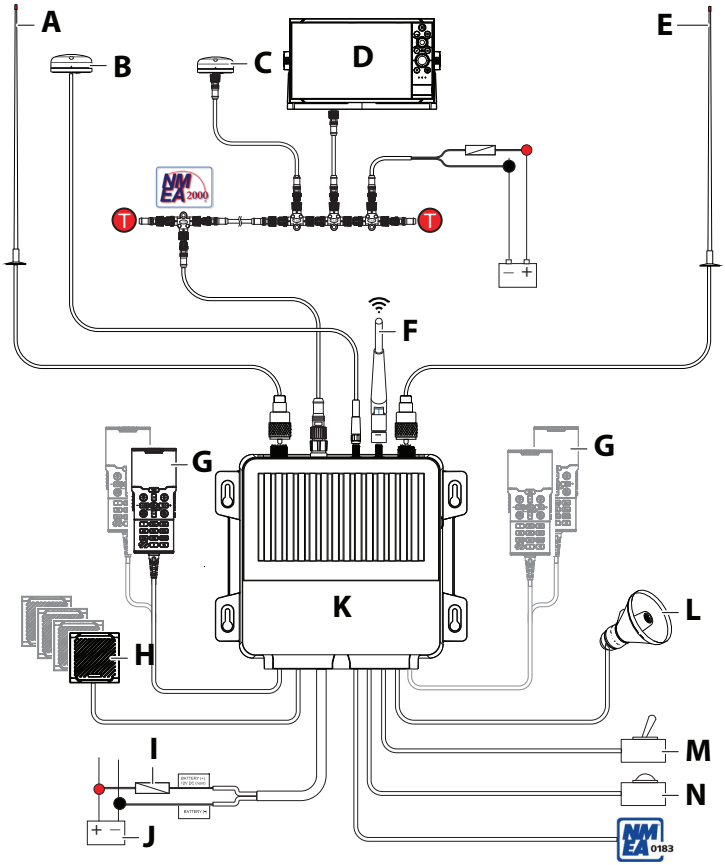

A AIS Antenna (NRS-2 only)
B GPS-500 (NRS-1 optional; NRS-2 mandatory)
C NMEA 2000® GPS Source (Optional on NRS-1 only)
D Navico MFD
E VHF Antenna
F Wireless Dipole Antenna (Optional 6 meter extension cable available)
G Fixed Handsets (HS1 mandatory, HS2, HS3, HS4 optional)
H Wired Speakers (Optional - 4 max)
I Breaker/Power Switch
J 12V DC Power Supply
K NRS-1 / NRS-2 Blackbox
L HAILER/HORN Speaker
M Silent Switch (NRS-2 only) - (Normally open, toggle)
N HORN button - (Normally open, momentary)

First time startup configuration

> ⚠ **Warning:** Never operate the radio without the antenna connected. This may damage the transmitter.

The first time the radio is powered up, the user is prompted to make a series of setting selections in order to allow the radio to perform to its full potential. Some steps must be completed; some are optional and can be completed later.

→ ***Note:*** Press DSC/MENU key to move the cursor 1 digit to the left; press TRI key to skip this screen and move to the next; press X key to go back one screen.

The steps are outlined below for reference:

1 Select the country and region the radio will be operated in.

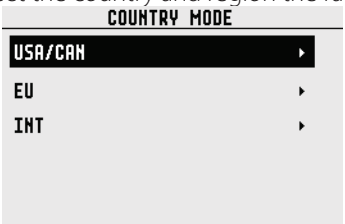

2 Enter MMSI number if known, or skip to next step. Re-enter number to confirm correct entry:

→ ***Note:*** MMSI entry can only be done once. Changing the MMSI requires radio be returned to a Simrad®/B&G® dealer.

3 If you have selected the Country mode to be EU, some EU regions require you to setup ATIS. Enter the ATIS ID number. Re-enter number to confirm correct entry:

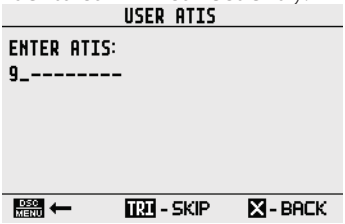

4 Enter vessel call sign if known, or skip to next step (maximum 7 digits):

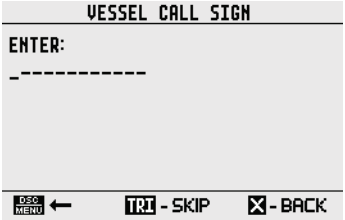

5 Select a GPS source:

NRS-1

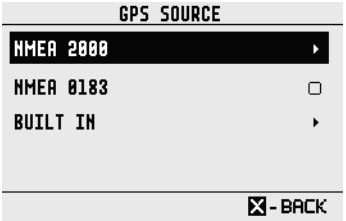

NRS-2

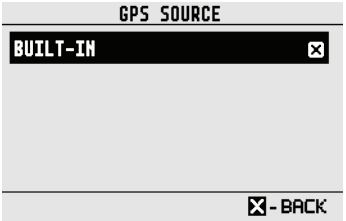

6 Set the time offset for your region. Time Offset in 24 hour format:

7 Select 12 HOUR or 24 HOUR format:

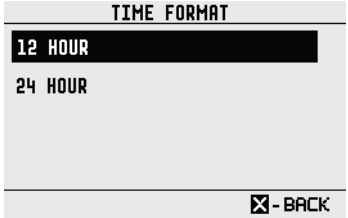

8 Select CONFIGURE AIS to configure CLASS-B AIS (NRS-2 only).

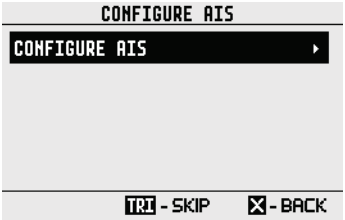

10 VHF Radio Help and Troubleshooting Guide

This guide aims to help resolve an issue you may encounter with the system during installation or operation.

In some cases, a restart of the system may remedy the situation; however, other steps may need to be followed such as performing a factory reset.

Additionally, refer to the built-in system diagnostics screens to assist in resolving issues.

Software updates

The System software can be updated via the NMEA 2000® network using a connected Simrad®/B&G® MFD.

Software for the Blackbox, Fixed Handset(s), and Wireless Handset(s) is available in one update file available from the Help & Support section on the brand websites:

- www.simrad-yachting.com
- www.bandg.com

Factory Reset

Refer to "Reset" on page 48 for more details.

→ ***Note:*** MMSI, ATIS ID and AIS vessel details will not be changed.

System Diagnostics screens

Refer to "Diagnostics" on page 46 to display System, AIS, NMEA 2000® and GPS diagnostics screens.

My VHF shortcut

The My VHF shortcut provides hardware, software, vessel and GPS details that can be helpful when requesting support.

Refer to "Shortcuts" on page 62 for more details.

Power LED

LED color	Function	Details
None	System OFF	System turned OFF.
		No power to the unit. Check connections and fuse.
GREEN-flashing	System Powering ON	Power-on self-test in progress (VHF VSWR, TX, RX). GPS system initializing, no fix.
GREEN	Power ON	Power-on self-test passed. System powered on and functional, GPS fix obtained.
RED-flashing	SYSTEM ERROR CONDITION	Power-on self-test failed. Refer to diagnostic screens for diagnosing actual system fault.

AIS LED (NRS-2 only)

Color	Function	Details
GREEN	TX (momentary flash)	AIS TX
RED-flashing	AIS ERROR CONDITION	AIS VSWR, TX, RX etc. Refer to AIS diagnostic screen for diagnosing actual AIS fault.
ORANGE	SILENT SWITCH MODE ACTIVE	AIS Silent Mode is active.
ORANGE-flashing	RX (momentary flash)	AIS RX

AIS Pop-up warning messages (NRS-2 only)

	Error message	Error type	Reason	Details
1	AIS BASEBAND ERROR!	Pop-up message	AIS baseband unable to initialize	Detect when AIS first powers on. Restart the system, if error repeats then service required.

	Error message	Error type	Reason	Details
2	AIS VSWR ERROR!	Pop-up message	AIS antenna VSWR detection (open circuit or short circuit)	Detect at each AIS transmission. Either the antenna is missing (open circuit), or damaged (short circuit). Can also be due to corrosion of wiring or connections. Can continue operating, however Tx and Rx will be affected. Recommend replacing antenna.
3	AIS CHANNEL ERROR	AIS Icon flashes ERR	AIS channel background noise exceeds -77dbm	Detect every 4 seconds. Usually because all AIS-CS transmit slots are busy. The system will transmit when slots are available.
4	AIS FREQUENCY ERROR	AIS Icon flashes ERR	AIS channel frequency settings invalid	Detect when channel settings changes (by Msg22 or DSC channel management).
5	AIS PLL ERROR!	Pop-up message	AIS channel PLL UNLOCK or not functioning	Detect at each AIS transmission. Phase Locked Loop abnormal. Restart the system, if error repeats then service required.

Troubleshooting

System

	Issue	Reason	Details
1	Unit won't power ON	Fuse blown in Blackbox	Check the blade fuse in the unit and ensure the correct amperage (10A). Reset the circuit breaker
2		Incorrect fuse / breaker size	Ensure correct fuse / breaker rating at fuse / breaker panel
3		Damaged wiring	Check wiring maybe damaged or corroded.
4		System cannot be turned on from a Wireless Handset	Power to the system can only be turned on from a fixed handset. Short press power button on any fixed handset

5	Repeated blown fuse or circuit breaker tripping	Wiring reverse polarity	Check wiring: POWER (+) should be connected to Battery (+)
6	System shuts down when transmitting	Insufficient power available at the Blackbox power terminals / flat battery	A built-in low voltage safety feature shuts the system down when the supply voltage drops below the value specified in the specifications. Likely to happen when the VHF is transmitting at HI (25W) power. Check wiring is capable of supplying required current
7	No sound from Handset speaker	Volume is set too low	Check volume is not at minimum and adjust as required
8		Handset speaker is turned OFF	Turn handset speaker ON.
9	No sound from wired speaker	Incorrect wiring	Confirm wiring is correct
10		Volume is set too low	Check volume is not at minimum and adjust as required
11		Incorrect speaker assignment	Check speaker assignments including offset value. You may need to set a minimum offset value so speaker volume does not go too low
12	No GPS fix	Incorrect GPS Source Setting	Check GPS Source is correct – Internal or Networked
13		Antenna covered	External GPS antenna location unsuitable. Ensure the antenna has a clear view of the sky
14		Poor coverage in current location	Unable to get a 3D fix in the current location

VHF

Issue		Reason	Details
1	Can TX but don't hear a response	Selected channel is Duplex, with no repeater in range	For radio-to-radio communications, ensure a Simplex channel is used. Refer to "Channel charts" on page 98
2			You can easily check if a repeater is in range: select a Duplex channel, press PTT for a short time and then listen for a short burst/crack over the speaker shortly after releasing the PTT. If no burst, then there is no repeater in range.
3		Squelch (SQL) not set correctly	Adjust squelch so that noise just clears.
4		Channel is set to LO (1W) power	Receiving station is out of range. Change to HI (25W) power where available (long press OK key)
5		Faulty antenna	Check VHF antenna. Test with a known good antenna
6	Can RX but station can't hear me	Channel is set to LO (1W) power	Receiving station is out of range. Change to HI (25W) power where available (long press OK key)
7		Faulty antenna	Check VHF antenna. Test with a known properly functioning antenna
8	Digital noise each time I release PTT	Radio has ATIS function turned ON	Only use ATIS function while navigating in European waterways. Turn ATIS OFF otherwise
9	Reduced Tx power level	The radio is optimized to operate at +13.6 V DC, ±1V DC. Voltages outside this may cause reduced VHF output power	Ensure the radio is operating within the optimized voltage range
10		Failing antenna	Check all antenna connections. A bad antenna connection will reduce power levels. Check antenna cable for corrosion due to water ingress

AIS Class-B (NRS-2 only)

Issue		Reason	Details
1	AIS won't TX	No AIS Antenna	A VHF antenna must be connected to the AIS antenna port
2		AIS details not completed	All details in the AIS setup screen must be completed before the AIS system can commence transmitting.
3		No MMSI	A valid MMSI must be added before the AIS system can commence transmitting
4		No GPS fix	A GPS fix must be obtained
5		Silent Switch is ON	The AIS system will receive but not transmit while Silent mode is active. Set Silent Switch to OFF

DSC / ATIS

Issue		Reason	Details
1	DSC is off	No MMSI	You must enter a valid MMSI before DSC can be used
2		DSC function turned OFF	Turn DSC function ON.
3		ATIS is ON	ATIS is turned ON. ATIS and DSC cannot be ON at the same time.
4	ATIS is off	ATIS function not available on my system	ATIS is only available on EU models
5		No MMSI	You must enter a valid MMSI before DSC can be used
6		ATIS function turned OFF	Turn ATIS function ON.
7		DSC is ON	DSC is turned ON. ATIS and DSC can ot be ON at the same time.
8	Digital noise each time I release PTT	Radio has ATIS function turned ON	Only use ATIS function while navigating in European waterways. Turn ATIS OFF otherwise.

HS100, H100

Issue		Reason	Details
1	Handset screen blank	System not turned ON	System must first be turned ON from any fixed handset.
2		Contrast setting too low	Adjust in Contrast menu. It may be difficult to get to the Contrast menu if you are not able to see the screen. It will be easier to follow your steps when viewing on a second handset.

VHF/AIS antennas

Issue		Reason	Details
1	Antenna cross-talk	Antennas too close to each other	Ensure adequate separation between antennas
2	Communication in one direction but not the other	Obstruction on one side of the antenna	Having an obstruction such as an exhaust stack or sail mast on one side of the antenna can interfere with transmissions and reception from that direction.

11 RS100/B, V100/B Specifications

System features

Local/Distant control:	Yes
LL Position polling:	Yes
Group call:	Yes
Call logs:	Yes - 20 individual and 10 distress
Channel naming:	Yes
Handset naming:	Yes
Dual watch / Tri watch:	Yes
Favorite channel scan:	Yes
All scan:	Yes
User programmable MMSI:	Yes
User programmable ATIS ID:	Yes
MMSI and NAME directory:	Yes - 50 vessel contacts and 20 group contacts
Software updates:	Yes, via NMEA 2000®

Technical

Power supply:	12 V DC battery system; negative ground
	Operating voltage range: +10.8 V to +15.6 V
	Nominal operating voltage: + 13.6 V DC
	Low battery alert: 10.8 V DC +/- 0.25 V
	Under voltage protection: <9.1 V +/- 0.25 V
	Over voltage protection: >15.6 V +/- 0.25 V
Current drain:	Transmit: ≤ 6 A @ 25 W (Hi) / 1.5 A @ 1W (Lo)
	Standby - RS100/V100, 1 FHS: Less than 400 mA
	Standby - RS100-B/V100-B, 1 FHS: Less than 650 mA
Replacement fuse:	10 A, mini-blade type
Temperature range:	-20 ˚C to +55 ˚C (-4 ˚F to 131 ˚F)

Software version:	V5.20 (at time of release)
Equipment category:	NRS-1, NRS-2: B (Protected)
	HS100, H100, SP100: B (Protected)
	HS40, H60: A (Portable)
VHF antenna:	Connector: SO-239 (50 ohm) x1
	Antenna Type: Dipole
	Antenna Gain value: 6 dBi
AIS antenna (NRS-2 only):	Connector: SO-239 (50 ohm) x1
	Antenna Type: Dipole
	Antenna Gain value: 6 dBi
GPS antenna connector:	SMA (female) x1
Wireless connector:	RP-SMA (female) x1
Compass safe distance:	0.5 m (1.5')
NMEA 0183®:	Baud rate: Selectable 38400 or 4800 BAUD
	Input (RS100,V100): RMC, GGA, GLL, GNS
	Input (RS100-B,V100-B): RMC, GGA, GLL, GNS,HDG, HDM, HDT
	Output (RS100,V100): DSC, DSE, MOB, VDM
	Output (RS100-B,V100-B): DSC, DSE, MOB, VDM, VDO
NMEA 2000®:	Yes x 1
	See Chapter 13 for supported PGNs
External speaker:	Output: 5 W @ 4 ohm x 4
	Recommended speaker: 4 ohm, minimum 8 W
Hailer speaker:	Output: 24W @ 4 ohm x 1
	Recommended speaker: 4 ohm, minimum 30 W
Waterproof:	NRS-1, NRS-2: IPx5
	HS100, H100, SP100: IPx7
	HS40, H60: IPx7
Weight:	NRS-1, NRS-2: 2.5 kg (5.5 lbs)
	HS100, H100: 1.46 kg (3.2 lbs)
	SP100: 0.45 kg (1.0 lbs)

VHF Transceiver

VHF Mode:	16K0G3E (FM) / 16K0G2B (DSC)
Usable channels (country specific):	International, Europe, USA, Canada, Weather
Channel spacing:	25 KHz
Frequency stability:	± 5 ppm
Frequency control:	PLL
DSC mode:	Class D (Global) with dual receiver (individual CH70)
	TX Deviation at 1.3K: 2.6 ± 0.26 KHz
	TX Deviation at 2.1K: 4.2 ± 0.42 KHz
ATIS mode:	TX Deviation at 1.3 KHz: 1.3 ± 0.13 KHz
	TX Deviation at 2.1 KHz: 2.1 ± 0.21 KHz

VHF Transmitter

Transmitter Frequency range:	156.025 - 157.425 MHz
Output power:	25 W (23 ± 2) / 1 W (0.8 ± 0.2)
Transmitter protection:	Open / short circuit of antenna
Frequency error:	≤± 1.5 KHz
Max Frequency deviation:	≤± 5
Spurious & harmonics Hi/Lo:	≤ 0.25 µ W
Modulation Distortion ±3KHz:	≤ 10 %
S/N at 3KHz Deviation:	≥ 40 dB
Audio Response at 1KHz:	+1 to -3dB of 6 dB/octave from 300 hz to 3 KHz

VHF Receiver

Receiver frequency range:	156.050 - 163.275 MHz
12dB SINAD sensitivity:	0.25 µV (distant) / 0.8 µV (local) 20db SINAD
sensitivity:	0.35 µV
Adjacent CH selectivity:	more than 70 db
Spurious response:	more than 70 db
Intermodulation rejection:	more than 68 db
Residual noise level:	more than -40 db unsquelched

AIS (Class-B) (NRS-2 only)

AIS mode:	Class-B CS (CSTDMA)
AIS receive function:	Yes, dual receivers (receive only)
AIS receive performance:	RX sensitivity: less than -107 dbm at 20% PER
	Co-channel rejection: 10 db at 20% PER
	Adjacent channel selectivity:70 db at 20% PER
	Intermodulation response rejection: 65 db at 20% PER
	Blocking: 86 db at 20% PER
AIS transmit function:	Yes, single
AIS transmitter performance:	Frequency range: 161.500 to 162.025 MHz in 25 kHz steps
	Output power: 33 dbm ± 1.5 db
	Channel bandwidth: 25 kHz
	Modulation modes: 25 kHz GMSK for AIS TX and RX
	FrBit rate: 9600 b/s ± 50 ppm (GMSK)

Built-in GPS Receiver

Receiving frequency:	1575.42 MHz
Tracking code:	C/A code
Number of channels:	72 channels
Horizontal accuracy:	<10 m
Position fixing time:	Warm start: 30s, Cold start: 90s
Position update interval:	1 second typical

Wireless specifications

Wireless standard:	802.11 b/g/n20
Operating frequency:	2412~2472 MHz (for EU); 2412-2462 MHz (for US)
Rx Sensitivity (802.11 b - 11 Mbps):	-86 dBm (+/-2)
Tx Power (802.11 b - 11 Mbps):	9.77 dBm (Declaration for EU Compliance)
Functional range:	80 m (Blackbox dipole antenna -> handset; direct line of sight, no obstructions)

HS100 / H100 - Fixed handset

LCD display:	FSTN 256x160 pixels, monochrome
Contrast control:	Yes
Backlight synching:	Yes, via NMEA 2000® network
Backlight:	White LED; adjustable in 10 levels; Day and Night mode

HS40 / H60 - Wireless handset

LCD display:	FSTN 256x160 pixels, monochrome
Battery (internal):	Li-Ion (lithium Ion); 3.6 V 2050 mAh (5.1 Wh)
Charging system:	Inductive charging when set on cradle charger (BC-12)
Wireless standard:	802.11 b/g/n20
Operating frequency:	2412~2472 MHz (for EU); 2412-2462 MHz (for US)
Rx Sensitivity (802.11 b - 11 Mbps):	-86 dBm (+/-2)
Tx Power (802.11 b - 11 Mbps):	9.81 dBm (Declaration for EU Compliance)
Functional range:	70 m (handset -> base station; direct line of sight, no obstructions)

Handset cradle charger (BC-12)

HS40 cradle charger voltage:	12V DC battery system (negative ground)
HS40 cradle charger DC current drain:	≤0.5 A
Charger operating frequency:	131.125 KHz-176.600 KHz
Charger max. RF power:	-10.88 dB µA/m @ 10 m
Environmental:	IPx7

→ ***Note:*** Specifications are subject to change without notice.

12 Channel charts

The following channel charts are provided for reference only and may not be correct for all regions. It is the operators' responsibility to ensure correct channels and frequencies are used for local regulations.

EU and International channel chart

With reference to Appendix 18 (Rev.WRC-15) (See article 52).

→ **Note:** For assistance in understanding the table, see Notes a) to zz) below. (WRC-15)

→ **Note:** The table below defines the channel numbering for maritime VHF communications based on 25 kHz channel spacing and use of several duplex channels. The channel numbering and the conversion of two-frequency channels for single-frequency operation shall be in accordance with Recommendation ITU-R M.1084-5 Annex 4, Tables 1 and 3. The table below also describes the harmonized channels where the digital technologies defined in the most recent version of Recommendation ITU-R M.1842 could be deployed. (WRC-15)

→ **Note:** Depending on the country your radio is set to, not all channels listed in the following table maybe available.

Channel designator	Notes	Transmitting frequencies (MHz)		Inter ship	Port operations and ship movement		Public correspondence
		From ship stations	From coast stations		Single frequency	Two frequency	
60	m)	156.025	160.625		x	x	x
01	m)	156.050	160.650		x	x	x
61	m)	156.075	160.675		x	x	x
02	m)	156.100	160.700		x	x	x
62	m)	156.125	160.725		x	x	x
03	m)	156.150	160.750		x	x	x
63	m)	156.175	160.775		x	x	x
04	m)	156.200	160.800		x	x	x
64	m)	156.225	160.825		x	x	x
05	m)	156.250	160.850		x	x	x
65	m)	156.275	160.875		x	x	x
06	f)	156.300		x			
2006	r)	160.900	160.900				
66	m)	156.325	160.925		x	x	x

07	m)	156.350	160.950		x	x	x
67	h)	156.375	156.375	x	x		
08		156.400		x			
68		156.425	156.425		x		
09	i)	156.450	156.450	x	x		
69		156.475	156.475	x	x		
10	h), q)	156.500	156.500	x	x		
70	f), j)	156.525	156.525	Digital selective calling for distress, safety and calling			
11	q)	156.550	156.550		x		
71		156.575	156.575		x		
12		156.600	156.600		x		
72	i)	156.625		x			
13	k)	156.650	156.650	x	x		
73	h), i)	156.675	156.675	x	x		
14		156.700	156.700		x		
74		156.725	156.725		x		
15	g)	156.750	156.750	x	x		
75	n), s)	156.775	156.775		x		
16	f)	156.800	156.800	Distress, safety and calling			
76	n), s)	156.825	156.825		x		
17	g)	156.850	156.850	x	x		
77		156.875		x			
18	m)	156.900	161.500		x	x	x
78	m)	156.925	161.525		x	x	x
1078		156.925	156.925		x		
2078	mm)		161.525		x		
19	m)	156.950	161.550		x	x	x
1019		156.950	156.950		x		
2019	mm)		161.550		x		
79	m)	156.975	161.575		x	x	x
1079		156.975	156.975		x		
2079	mm)		161.575		x		
20	m)	157.000	161.600		x	x	x
1020		157.000	157.000		x		
2020	mm)		161.600		x		
80	y), wa)	157.025	161.625		x	x	x
21	y), wa)	157.050	161.650		x	x	x
81	y), wa)	157.075	161.675		x	x	x

22	y), wa)	157.100	161.700		x	x	x
82	x), y), wa)	157.125	161.725		x	x	x
23	x), y), wa)	157.150	161.750		x	x	x
83	x), y), wa)	157.175	161.775		x	x	x
24	w), ww), x), xx)	157.200	161.800		x	x	x
1024	w), ww), x), xx)	157.200					
2024	w), ww), x), xx)	161.800	161.800	x (digital only)			
84	w), ww), x), xx)	157.225	161.825		x	x	x
1084	w), ww), x), xx)	157.225					
2084	w), ww), x), xx)	161.825	161.825	x (digital only)			
25	w), ww), x), xx)	157.250	161.850		x	x	x
1025	w), ww), x), xx)	157.250					
2025	w), ww), x), xx)	161.850	161.850	x (digital only)			
85	w), ww), x), xx)	157.275	161.875		x	x	x
1085	w), ww), x), xx)	157.275					

2085	w), ww), x), xx)	161.875	161.875	x (digital only)			
26	w), ww), x)	157.300	161.900		x	x	x
1026	w), ww), x)	157.300					
2026	w), ww), x)		161.900				
86	w), ww), x)	157.325	161.925		x	x	x
1086	w), ww), x)	157.325					
2086	w), ww), x)		161.925				
27	z), zx)	157.350	161.950			x	x
1027	z), zz)	157.350	157.350		x		
ASM 1 (was 2027)	z)	161.950	161.950				
87	z), zz)	157.375	157.375		x		
28	z), zx)	157.400	162.000			x	x
1028	z), zz)	157.400	157.400		x		
ASM2 (was 2028)	z)	162.000	162.000				
88	z), zz)	157.425	157.425		x		
AIS 1	f), l), p)	161.975	161.975				
AIS 2	f), l), p)	162.025	162.025				

General notes referring to the table

a) Administrations may designate frequencies in the inter-ship, port operations and ship movement services for use by light aircraft and helicopters to communicate with ships or participating coast stations in predominantly maritime support operations under the conditions specified in Nos. **51.69, 51.73, 51.74, 51.75, 51.76, 51.77** and **51.78**. However, the use of the channels which are shared with public correspondence shall be subject to prior agreement between interested and affected administrations.

b) The channels of the present Appendix, with the exception of channels 06, 13, 15, 16, 17, 70, 75 and 76, may also be used for high-speed data and facsimile transmissions, subject to special arrangement between interested and affected administrations.

c) The channels of the present Appendix, with the exception of channels 06, 13, 15, 16, 17, 70, 75 and 76, may be used for direct-printing telegraphy and data transmission, subject to special arrangement between interested and affected administrations. (WRC-12)

d) The frequencies in this table may also be used for radiocommunications on inland waterways in accordance with the conditions specified in No. 5.226.

e) Administrations may apply 12.5 kHz channel interleaving on a non-interference basis to 25 kHz channels, in accordance with the most recent version of Recommendation ITU-R M.1084, provided:

- it shall not affect the 25 kHz channels of the present Appendix maritime mobile distress and safety, automatic identification system (AIS), and data exchange frequencies, especially the channels 06, 13, 15, 16, 17, 70, AIS 1 and AIS 2, nor the technical characteristics set forth in Recommendation ITU-R M.489-2 for those channels;
- implementation of 12.5 kHz channel interleaving and consequential national requirements shall be subject to coordination with affected administrations. (WRC-12)

Specific notes referring to the table

f) The frequencies 156.300 MHz (channel 06), 156.525 MHz (channel 70), 156.800 MHz (channel 16), 161.975 MHz (AIS 1) and 162.025 MHz (AIS 2) may also be used by aircraft stations for the purpose of search and rescue operations and other safety-related communication. (WRC-07)

g) Channels 15 and 17 may also be used for on-board communications provided the effective radiated power does not exceed 1 W, and subject to the national regulations of the administration concerned when these channels are used in its territorial waters.

h) Within the European Maritime Area and in Canada, these frequencies (channels 10, 67, 73) may also be used, if so required, by the individual administrations concerned, for communication between ship stations, aircraft stations and participating land stations engaged in coordinated search and rescue and anti-pollution operations in local areas, under the conditions specified in Nos. **51.69, 51.73, 51.74, 51.75, 51.76, 51.77** and **51.78**.

i) The preferred first three frequencies for the purpose indicated in Note a) are 156.450 MHz (channel 09), 156.625 MHz (channel 72) and 156.675 MHz (channel 73).

j) Channel 70 is to be used exclusively for digital selective calling for distress, safety and calling.

k) Channel 13 is designated for use on a worldwide basis as a navigation safety communication channel, primarily for intership navigation safety communications. It may also be used for the ship movement and port operations service subject to the national regulations of the administrations concerned.

l) These channels (AIS 1 and AIS 2) are used for an automatic identification system (AIS) capable of providing worldwide operation, unless other frequencies are designated on a regional basis for this purpose. Such use should be in accordance with the most recent version of Recommendation ITU-R M.1371. (WRC-07)

m) These channels may be operated as single frequency channels, subject to coordination with affected administrations. The following conditions apply for single frequency usage:

- The lower frequency portion of these channels may be operated as single frequency channels by ship and coast stations.
- Transmission using the upper frequency portion of these channels is limited to coast stations.
- If permitted by administrations and specified by national regulations, the upper frequency portion of these channels may be used by ship stations for transmission. All precautions should be taken to avoid harmful interference to channels AIS 1, AIS 2, 2027* and 2028*. (WRC-15)

* From 1 January 2019, channel 2027 will be designated ASM 1 and channel 2028 will be designated ASM 2.

mm) Transmission on these channels is limited to coast stations.

- If permitted by administrations and specified by national regulations, these channels may be used by ship stations for transmission. All precautions should be taken to avoid harmful interference to channels AIS 1, AIS 2, 2027* and 2028*. (WRC-15)

* From 1 January 2019, channel 2027 will be designated ASM 1 and channel 2028 will be designated ASM 2.

n) With the exception of AIS, the use of these channels (75 and 76) should be restricted to navigation-related communications only and all precautions should be taken to avoid harmful interference to channel 16, by limiting the output power to 1 W. (WRC-12)

o) (SUP - WRC-12)

p) Additionally, AIS 1 and AIS 2 may be used by the mobile-satellite service (Earth-to-space) for the reception of AIS transmissions from ships. (WRC-07)

q) When using these channels (10 and 11), all precautions should be taken to avoid harmful interference to channel 70. (WRC-07)

r) In the maritime mobile service, this frequency is reserved for experimental use for future applications or systems (e.g. new AIS applications, man over board systems, etc.). If authorized by administrations for experimental use, the operation shall not cause harmful interference to, or claim protection from, stations operating in the fixed and mobile services. (WRC-12)

s) Channels 75 and 76 are also allocated to the mobile-satellite service (Earth-to-space) for the reception of long- range AIS broadcast messages from ships (Message 27; see the most recent version of Recommendation ITU-R M.1371). (WRC-12)

t) (SUP – WRC-15)

u) SUP – WRC-15)

v) SUP – WRC-15)

w) In Regions 1 and 3:

- Until 1 January 2017, the frequency bands 157.200-157.325 MHz and 161.800-161.925 MHz (corresponding to channels: 24, 84, 25, 85, 26 and 86) may be used for digitally modulated emissions, subject to coordination with affected administrations. Stations using these channels or frequency bands for digitally modulated emissions shall not cause harmful interference to, or claim protection from, other stations operating in accordance with Article 5.
- From 1 January 2017, the frequency bands 157.200-157.325 MHz and 161.800-161.925 MHz (corresponding to channels: 24, 84, 25, 85, 26 and 86) are identified for the utilization of the VHF Data Exchange System (VDES) described in the most recent version of Recommendation ITU-R M.2092. These frequency bands may also be used for analogue modulation described in the most recent version of Recommendation ITU-R M.1084 by an administration that wishes to do so, subject to not causing harmful interference to, or claiming protection from other stations in the maritime mobile service using digitally modulated emissions and subject to coordination with affected administrations. (WRC-15)

wa) In Regions 1 and 3:

- Until 1 January 2017, the frequency bands 157.025-157.175 MHz and 161.625-161.775 MHz (corresponding to channels: 80, 21, 81, 22, 82, 23 and 83) may be used for digitally modulated emissions, subject to coordination with affected administrations. Stations using these channels or frequency bands for digitally modulated emissions shall not cause harmful interference to, or claim protection from, other stations operating in accordance with Article 5.
- From 1 January 2017, the frequency bands 157.025-157.100 MHz and 161.625-161.700 MHz (corresponding to channels: 80, 21, 81 and 22) are identified for utilization of the digital systems described in the most recent version of Recommendation ITU-R M.1842 using multiple 25 kHz contiguous channels.

- From 1 January 2017, the frequency bands 157.150-157.175 MHz and 161.750-161.775 MHz (corresponding to channels: 23 and 83) are identified for utilization of the digital systems described in the most recent version of Recommendation ITU-R M.1842 using two 25 kHz contiguous channels. From 1 January 2017, the frequencies 157.125 MHz and 161.725 MHz (corresponding to channel: 82) are identified for the utilization of the digital systems described in the most recent version of Recommendation ITU-R M.1842.
- The frequency bands 157.025-157.175 MHz and 161.625-161.775 MHz (corresponding to channels: 80, 21, 81, 22, 82, 23 and 83) can also be used for analogue modulation described in the most recent version of Recommendation ITU-R M.1084 by an administration that wishes to do so, subject to not claiming protection from other stations in the maritime mobile service using digitally modulated emissions and subject to coordination with affected administrations. (WRC-15)

ww) In Region 2:

- The frequency bands 157.200-157.325 and 161.800-161.925 MHz (corresponding to channels: 24, 84, 25, 85, 26 and 86) are designated for digitally modulated emissions in accordance with the most recent version of Recommendation ITU-R M.1842. In Canada and Barbados, from 1 January 2019 the frequency bands 157.200-157.275 and 161.800-161.875 MHz (corresponding to channels: 24, 84, 25 and 85) may be used for digitally modulated emissions, such as those described in the most recent version of Recommendation ITU-R M.2092, subject to coordination with affected administrations. (WRC-15)

x) From 1 January 2017, in Angola, Botswana, Lesotho, Madagascar, Malawi, Mauritius, Mozambique, Namibia, Democratic Republic of the Congo, Seychelles, South Africa, Swaziland, Tanzania, Zambia and Zimbabwe, the frequency bands 157.125-157.325 and 161.725-161.925 MHz (corresponding to channels: 82, 23, 83, 24, 84, 25, 85, 26 and 86) are designated for digitally modulated emissions.

- From 1 January 2017, in China, the frequency bands 157.150-157.325 and 161.750-161.925 MHz (corresponding to channels: 23, 83, 24, 84, 25, 85, 26 and 86) are designated for digitally modulated emissions. (WRC-12)

xx) From 1 January 2019, the channels 24, 84, 25 and 85 may be merged in order to form a unique duplex channel with a bandwidth of 100 kHz in order to operate the VDES terrestrial component described in the most recent version of Recommendation ITU-R M.2092. (WRC-15)

y) These channels may be operated as single or duplex frequency channels, subject to coordination with affected administrations. (WRC-12)

z) Until 1 January 2019, these channels may be used for possible testing of future AIS applications without causing harmful interference to, or claiming protection from, existing applications and stations operating in the fixed and mobile services.

- From 1 January 2019, these channels are each split into two simplex channels. The channels 2027 and 2028 designated as ASM 1 and ASM 2 are used for application specific messages (ASM) as described in the most recent version of

Recommendation ITU-R M.2092. (WRC-15)

zx) In the United States,

- these channels are used for communication between ship stations and coast stations for the purpose of public correspondence. (WRC-15)

zz) From 1 January 2019,

- channels 1027, 1028, 87 and 88 are used as single-frequency analogue channels for port operation and ship movement. (WRC-15)

Source: ITU Radio Regulations ; reproduced with permission from ITU

USA channel chart

Channel designator	Transmitting frequencies (MHz)		S/D/R	Channel name	Restrictions
	From ship stations	From coast stations			
6	156.300	156.300	S	SAFETY	
8	156.400	156.400	S	COMMERCIAL	
9	156.450	156.450	S	CALLING	
10	156.500	156.500	S	COMMERCIAL	
11	156.550	156.550	S	VTS	
12	156.600	156.600	S	PORT OPS/VTS	
13	156.650	156.650	S	BRIDGE COM	1W
14	156.700	156.700	S	PORT OPS/VTS	
15	--	156.750	R	ENVIROMENTAL	RX ONLY
16	156.800	156.800	S	DISTRESS	
17	156.850	156.850	S	SAR	1W
20	157.000	161.600	D	PORT OPS	
24	157.200	161.800	D	TELEPHONE	
25	157.250	161.850	D	TELEPHONE	
26	157.300	161.900	D	TELEPHONE	
27	157.350	161.950	D	TELEPHONE	
28	157.400	162.000	D	TELEPHONE	
67	156.375	156.375	S	BRIDGE COM	1W
68	156.425	156.425	S	SHIP-SHIP	
69	156.475	156.475	S	SHIP-SHIP	
71	156.575	156.575	S	SHIP-SHIP	
72	156.625	156.625	S	SHIP-SHIP	
73	156.675	156.675	S	PORT OPS	
74	156.725	156.725	S	PORT OPS	
75	156.775	156.775	S	PORT OPS	1W
76	156.825	156.825	S	PORT OPS	1W
77	156.875	156.875	S	PORT OPS	1W
84	157.225	161.825	D	TELEPHONE	
85	157.275	161.875	D	TELEPHONE	

86	157.325	161.925	D	TELEPHONE	
87	157.375	157.375	S	TELEPHONE	
88	157.425	157.425	S	INTER-SHIP	
1001 (was 01A)	156.050	156.050	S	PORT OPS/VTS	
1005 (was 05A)	156.250	156.250	S	PORT OPS/VTS	
1007 (was 07A)	156.350	156.350	S	COMMERCIAL	
1018 (was 18A)	156.900	156.900	S	COMMERCIAL	
1019 (was 19A)	156.950	156.950	S	COMMERCIAL	
1020 (was 20A)	157.000	157.000	S	PORT OPS	
1021 (was 21A)	157.050	157.050	S	US COAST GRD	
1022 (was 22A)	157.100	157.100	S	US COAST GRD	
1023 (was 23A)	157.150	157.150	S	US COAST GRD	
1063 (was 63A)	156.175	156.175	S	PORT OPS/VTS	
1065 (was 65A)	156.275	156.275	S	PORT OPS	
1066 (was 66A)	156.325	156.325	S	PORT OPS	
1078 (was 78A)	156.925	156.925	S	SHIP-SHIP	
1079 (was 79A)	156.975	156.975	S	COMMERCIAL	
1080 (was 80A)	157.025	157.025	S	COMMERCIAL	
1081 (was 81A)	157.075	157.075	S	RESTRICTED	
1082 (was 82A)	157.125	157.125	S	RESTRICTED	
1083 (was 83A)	157.175	157.175	S	RESTRICTED	

USA weather channels

Channel designator	Transmitting frequencies (MHz)		S/D/R	Channel name	Restrictions
	From ship stations	From coast stations			
WX1	--	162.550	R	NOAA WX1	RX ONLY
WX2	--	162.400	R	NOAA WX2	RX ONLY
WX3	--	162.475	R	NOAA WX3	RX ONLY
WX4	--	162.425	R	NOAA WX4	RX ONLY
WX5	--	162.450	R	NOAA WX5	RX ONLY
WX6	--	162.500	R	NOAA WX6	RX ONLY
WX7	--	162.525	R	NOAA WX7	RX ONLY

EAS Event (NWR-SAME) Codes

Weather-Related Events	NWR-SAME Code	Status
Blizzard Warning	BZW	Operational
Coastal Flood Watch	CFA	Operational
Coastal Flood Warning	CFW	Operational
Dust Storm Warning	DSW	Operational
Extreme Wind Warning	EWW	Operational
Flash Flood Watch	FFA	Operational
Flash Flood Warning	FFW	Operational
Flash Flood Statement	FFS	Operational
Flood Watch	FLA	Operational
Flood Warning	FLW	Operational
Flood Statement	FLS	Operational
High Wind Watch	HWA	Operational
High Wind Warning	HWW	Operational
Hurricane Watch	HUA	Operational
Hurricane Warning	HUW	Operational
Hurricane Statement	HLS	Operational
Severe Thunderstorm Watch	SVA	Operational
Severe Thunderstorm Warning	SVR	Operational
Severe Weather Statement	SVS	Operational
Snow Squall Warning	SQW 2	Operational
Special Marine Warning	SMW	Operational
Special Weather Statement	SPS	Operational
Storm Surge Watch	SSA	Operational
Storm Surge Warning	SSW	Operational
Tornado Watch	TOA	Operational
Tornado Warning	TOR	Operational
Tropical Storm Watch	TRA	Operational
Tropical Storm Warning	TRW	Operational
Tsunami Watch	TSA	Operational
Tsunami Warning	TSW	Operational
Winter Storm Watch	WSA	Operational
Winter Storm Warning	WSW	Operational

Non-Weather-Related Events	NWR-SAME Code	Status
State and Local Codes-Optional		
Avalanche Watch	AVA	Operational
Avalanche Warning	AVW	Operational
Child Abduction Emergency	CAE	Operational
Civil Danger Warning	CDW	Operational
Civil Emergency Message	CEM	Operational
Earthquake Warning	EQW	Operational
Evacuation Immediate	EVI	Operational
Fire Warning	FRW	Operational
Hazardous Materials Warning	HMW	Operational
Law Enforcement Warning	LEW	Operational
Local Area Emergency	LAE	Operational
911 Telephone Outage Emergency	TOE	Operational
Nuclear Power Plant Warning	NUW	Operational
Radiological Hazard Warning	RHW	Operational
Shelter in Place Warning	SPW	Operational
Volcano Warning	VOW	Operational

Administrative Events	NWR-SAME Code	Status
Administrative Message	ADR	Operational
Practice/Demo Warning	DMO	Operational
Required Monthly Test	RMT	Operational
Required Weekly Test	RWT	Operational

Naming Convention for EAS Event Codes

The FCC established naming conventions for EAS event codes. In most cases, and for all future codes to be approved, the third letter of all hazardous state and local event codes is limited to one of four letters:

- **W** - for WARNINGS
- **A** - for WATCHES
- **E** - for EMERGENCIES
- **S** - for STATEMENTS

For more information about the Emergency Alert System:

- **Details**: https://www.weather.gov/nwr/nwrsame
- **Country Codes**: https://www.weather.gov/nwr/counties
- **Event Codes**: https://www.weather.gov/nwr/eventcodes

Canada channel chart

Channel designator	Frequencies		S/D/R	Channel Name:	Restrictions
	MHz (ship)	MHz (coast)			
1	156.050	160.650	D	TELEPHONE	
2	156.100	160.700	D	TELEPHONE	
3	156.150	160.750	D	TELEPHONE	
4	156.200	160.800	D	CANADIAN CG	
5	156.250	160.850	D	TELEPHONE	
6	156.300	156.300	S	SAFETY	
7	156.350	160.950	D	TELEPHONE	
8	156.400	156.400	S	COMMERCIAL	
9	156.450	156.450	S	VTS	
10	156.500	156.500	S	VTS	
11	156.550	156.550	S	VTS	
12	156.600	156.600	S	PORT OPS/VTS	
13	156.650	156.650	S	BRIDGE COM	1W
14	156.700	156.700	S	PORT OPS/VTS	
15	156.750	156.750	S	COMMERCIAL	1W
16	156.800	156.800	S	DISTRESS	
17	156.850	156.850	S	SAR	1W
18	156.900	161.500	D	TELEPHONE	
19	156.950	161.550	D	CANADIAN CG	
20	157.000	161.600	D	CANADIAN CG	1W
21	157.050	161.650	D	CANADIAN CG	
22	157.100	161.700	D	TELEPHONE	
23	157.150	161.750	D	TELEPHONE	
24	157.200	161.800	D	TELEPHONE	
25	157.250	161.850	D	TELEPHONE	
26	157.300	161.900	D	TELEPHONE	
27	157.350	161.950	D	TELEPHONE	
28	157.400	162.000	D	TELEPHONE	
60	156.025	160.625	D	TELEPHONE	
61	156.075	160.675	D	CANADIAN CG	
62	156.125	160.725	D	CANADIAN CG	

63	156.175	160.775	D	TELEPHONE	
64	156.225	160.825	D	TELEPHONE	
65	156.275	160.875	D	TELEPHONE	
66	156.325	160.925	D	TELEPHONE	
67	156.375	156.375	S	COMMERCIAL	
68	156.425	156.425	S	SHIP-SHIP	
69	156.475	156.475	S	COMMERCIAL	
71	156.575	156.575	S	VTS	
72	156.625	156.625	S	SHIP-SHIP	
73	156.675	156.675	S	COMMERCIAL	
74	156.725	156.725	S	VTS	
75	156.775	156.775	S	PORT OPS	1W
76	156.825	156.825	S	PORT OPS	1W
77	156.875	156.875	S	PORT OPS	1W
78	156.925	161.525	D	TELEPHONE	
79	156.975	161.575	D	TELEPHONE	
80	157.025	161.625	D	TELEPHONE	
81	157.075	161.675	D	TELEPHONE	
82	157.125	161.725	D	CANADIAN CG	
83	157.175	161.775	D	CANADIAN CG	
84	157.225	161.825	D	TELEPHONE	
85	157.275	161.875	D	TELEPHONE	
86	157.325	161.925	D	TELEPHONE	
87	157.375	157.375	S	PORT OPS	
88	157.425	157.425	S	PORT OPS	
1001	156.050	156.050	S	COMMERCIAL	
1005	156.250	156.250	S	PORT OPS/VTS	
1007	156.350	156.350	S	COMMERCIAL	
1018	156.900	156.900	S	COMMERCIAL	
1019	156.950	156.950	S	CANADIAN CG	
1020	157.000	157.000	S	PORT OPS	
1021	157.050	157.050	S	RESTRICTED	
1022	157.100	157.100	S	CANADIAN CG	
1024	157.200	157.200	S	PORT OPS	

1025	157.250	157.250	S	PORT OPS	
1026	157.300	157.300	S	PORT OPS	
1027	157.350	157.350	S	CANADIAN CG	
1061	156.075	156.075	S	CANADIAN CG	
1062	156.125	156.125	S	CANADIAN CG	
1063	156.175	156.175	S	TELEPHONE	
1064	156.225	156.225	S	RESTRICTED	
1065	156.275	156.275	S	PORT OPS	
1066	156.325	156.325	S	PORT OPS	
1078	156.925	156.925	S	SHIP-SHIP	
1079	156.975	156.975	S	COMMERCIAL	
1080	157.025	157.025	S	COMMERCIAL	
1083	157.175	157.175	S	RESTRICTED	
1084	157.225	157.225	S	PORT OPS	
1085	157.275	157.275	S	CANADIAN CG	
1086	157.325	157.325	S	PORT OPS	
2019	--	161.550	R	PORT OPS	RX ONLY
2020	--	161.600	R	PORT OPS	RX ONLY
2023	--	161.750	R	SAFETY	RX ONLY
2026	--	161.900	R	PORT OPS	RX ONLY
2078	--	161.525	R	PORT OPS	RX ONLY
2079	--	161.575	R	PORT OPS	RX ONLY
2086	--	161.925	R	PORT OPS	RX ONLY

Canada weather channels

Channel designator	Transmitting frequencies (MHz)		S/D/R	Channel name	Restrictions
	From ship stations	From coast stations			
WX1	--	162.550	R	CANADA WX	Rx only
WX2	--	162.400	R	CANADA WX	Rx only
WX3	--	162.475	R	CANADA WX	Rx only

13 Dimensional drawings

NRS-1 and NRS-2 Blackbox

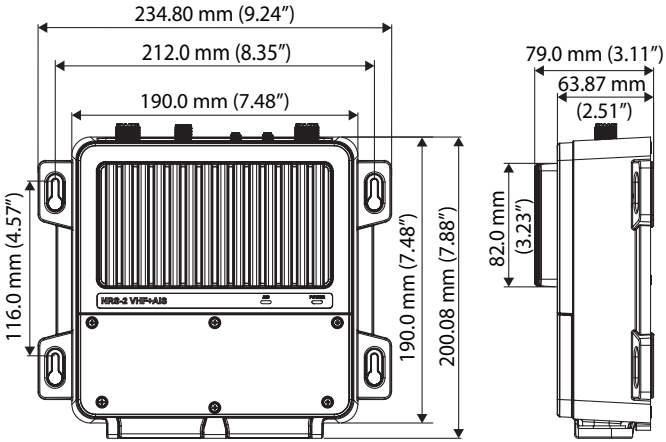

HS100 and H100 Fixed Handset

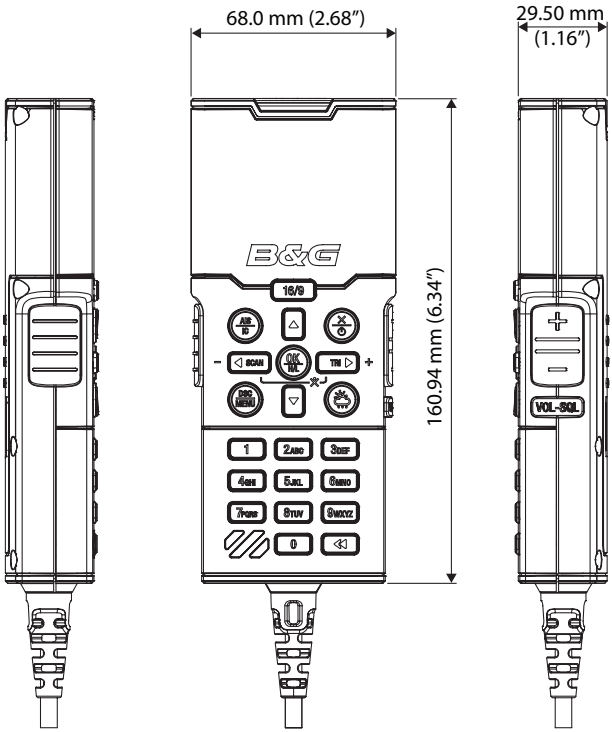

SP100 Speaker

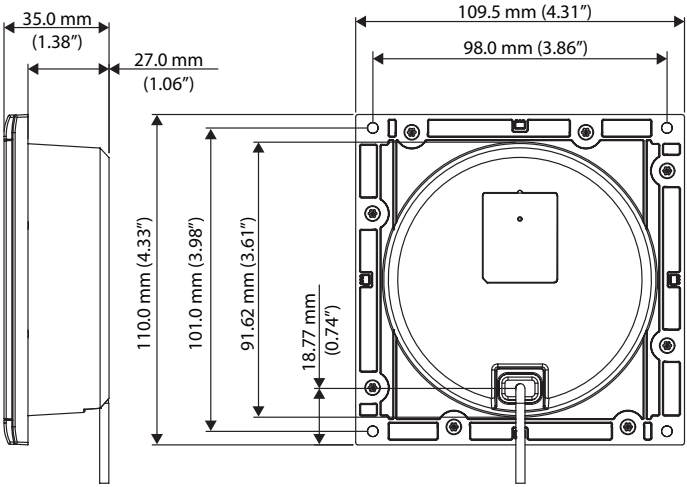

Handset Cradle (CR100) / Charger (BC-12)

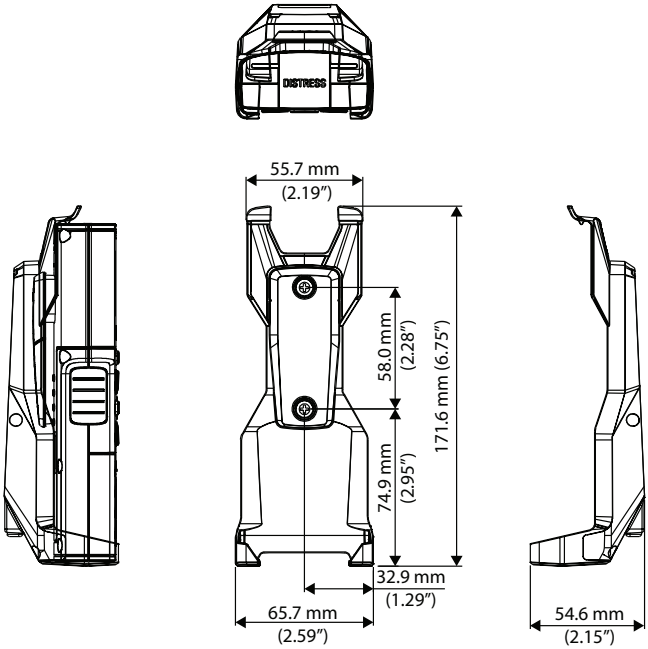

HS40 / H60 Wireless Handset

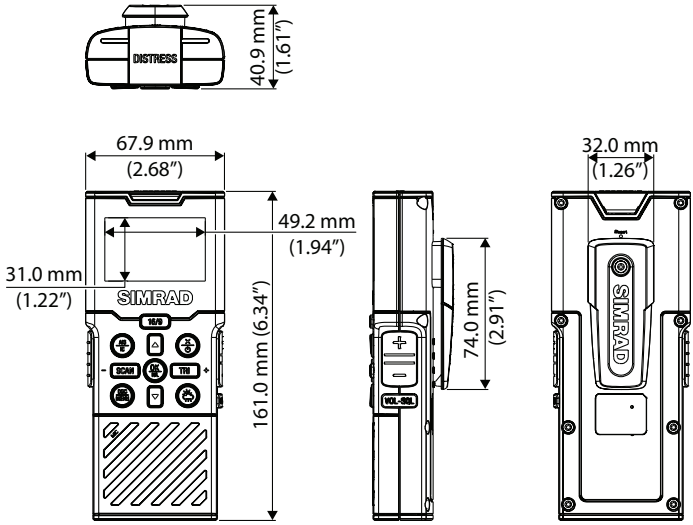

14 Appendix

Country settings table

Region	Country
INTERNATIONAL	INTERNATIONAL
	AUSTRALIA
	NEW ZEALAND
USA/CAN	UNITED STATES
	CANADA
EUROPE	AUSTRIA
	BELGIUM
	BULGARIA
	CROATIA
	CYPRUS
	CZECH REPUBLIC
	DENMARK
	ESTONIA
	FINLAND
	FRANCE
	GERMANY
	GREECE
	HUNGARY
	IRELAND
	ICELAND
	ITALY
	LIECHTENSTEIN
	LITHUANIA
	LUXEMBOURG
	LATVIA
	MOLDOVIA
	MALTA
	NETHERLANDS
	NORWAY

Region	Country
	POLAND
	PORTUGAL
	ROMANIA
	SLOVAK REPUBLIC
	SPAIN
	SERBIA
	SWEDEN
	SWITZERLAND
	SLOVENIA
	TURKEY
	UNITED KINGDOM

NMEA 2000® compliant PGN list

PGN	Description	RX	TX
59392	ISO Acknowledgement	●	●
59904	ISO Request	●	●
60160	Transport Protocol, Data Transfer	●	
60416	Transport Protocol	●	●
60928	ISO Address Claim	●	●
65240	Commanded Address	●	
126208	NMEA® — Group Function	●	●
126464	PGN List		●
126992	System Time		
126993	Heartbeat		●
126996	Product Information	●	●
126998	Configuration Information		●
127233	MOB Data		●
127250	Vessel Heading	●	
127258	Magnetic Variation	●	
128267	Water Depth	●	
129025	Position, Rapid Update		
129026	COG & SOG, Rapid Update	●	◊
129029	GNSS Position Data	●	◊
129033	Time & Date		
129038	AIS Class A Position Report		●
129039	AIS Class B Position Report		●
129040	AIS Class B Extended Position Report		●
129041	AIS Aids to Navigation (AtoN) Report		●
129044	Datum	●	
129283	Cross Track Error		●
129284	Navigation Data		●
129285	Navigation Route/WP Information		
129539	GNSS DOPs		◊
129540	GNSS Sats in View		◊

PGN	Description	RX	TX
129792	DGNSS Broadcast binary message (Tx)		●
129793	AIS UTC and Date Report		●
129794	AIS Class A Static and Voyage Related Data		●
129795	Addressed binary message (tx)		●
129796	Acknowledge (tx)		●
129797	AIS Binary Broadcast Message		●
129798	AIS SAR Aircraft Position Report		●
129799	Radio Frequency/Mode/Power		●
129800	UTC/Date enquiry (tx)		●
129801	AIS Addressed Safety Message		●
129802	AIS Safety Related Broadcast Message		●
129803	Interrogation (tx)		●
129804	Assignment Mode Command (tx)		●
129805	Data Link Management message (tx)		●
129807	AIS Group Assignment		
129808	DSC Call Information		●
129809	AIS Class B CS Static Data Report, Part A		●
129810	AIS Class B CS Static Data Report, Part B		●
130074	Route and WP Service - WP List -WP Name & Position		●
130306	Wind Data	●	
130840	Source Selection		
130842	AIS and VHF Message Transport	□	□
130845	Parameter Handle	●	●
130850	Event Command	●	
130851	Event Reply		●

(□) AIS-B model only (NRS-2)

(◊) Only if GPS source = INTERNAL

®Reg. U.S. Pat. & Tm. Off. and ™ common law marks. Visit www.navico.com/intellectual-property to review the global trademark rights and accreditations for Navico Holding AS and other entities.

www.simrad-yachting.com | www.bandg.com