LOWRANCE®

Link-6
User Guide

ENGLISH

lowrance.com

Preface

Disclaimer

As Navico is continuously improving this product, we retain the right to make changes to the product at any time which may not be reflected in this version of the manual. Please contact your nearestdistributor if you require any further assistance.

It is the owner's sole responsibility to install and use the equipment in a manner that will not cause accidents, personal injury or property damage. The user of this product is solely responsible for observing safe boating practices.

NAVICO HOLDING AS AND ITS SUBSIDIARIES, BRANCHES AND AFFILIATES DISCLAIM ALL LIABILITY FOR ANY USE OF THIS PRODUCT IN A WAY THAT MAY CAUSE ACCIDENTS, DAMAGE OR THAT MAY VIOLATE THE LAW.

Governing Language: This statement, any instruction manuals, user guides and other information relating to the product (Documentation) may be translated to, or has been translated from, another language (Translation). In the event of any conflict between any Translation of the Documentation, the English language version of the Documentation will be the official version of the Documentation.

This manual represents the product as at the time of printing. Navico Holding AS and its subsidiaries, branches and affiliates reserve the right to make changes to specifications without notice.

Copyright

Copyright © 2017 Navico Holding AS.

Warranty

The warranty card is supplied as a separate document.

In case of any queries, refer to the brand website of your unit or system: www.lowrance.com

RF Emissions notice

This equipment complies with FCC radiation exposure limits set forth for an controlled environment. This device's antenna must be installed in accordance with provided instructions; and it must be operated with minimum 89cm spacing between the antennas and all person's body (excluding extremities of hands, wrist and feet)

during operation. Further, this transmitter must not be co-located or operated in conjunction with any other antenna or transmitter.

FCC Statement

This device complies with Part 15 of the FCC Rules. Operation is subject to the following two conditions: (1) this device may not cause harmful interference, and (2) this device must accept any interference received, including interference that may cause undesired operation.

→ ***Note:*** This equipment has been tested and found to comply with the limits for a Class B digital device, pursuant to Part 15 of the FCC Rules. These limits are designed to provide reasonable protection against harmful interference in a normal installation. This equipment generates, uses and can radiate radio frequency energy and, if not installed and used in accordance with the instructions, may cause harmful interference to radio communications. However, there is no guarantee that interference will not occur in a particular installation. If this equipment does cause harmful interference to radio or television reception, which can be determined by turning the equipment off and on, the user is encouraged to try to correct the interference by one or more of the following measures:

- Reorient or relocate the receiving antenna.
- Increase the separation between the equipment and receiver.
- Connect the equipment into an output on a circuit different from that to which the receiver is connected.
- Consult the dealer or an experienced technician for help.
- A shielded cable must be used when connecting a peripheral to the serial ports.

Innovation, Science and Economic Development Canada Compliance

This equipment complies with ISEDC RF radiation exposure limits set forth for an controlled environment. This transmitter must not be co-located or operating in conjunction with any other antenna or transmitter. This equipment should be installed and operated with minimum distance 89cm between the radiator & your body.

ISEDC exposition aux radiations:

Cet équipement est conforme avec ISEDC les limites d'exposition aux rayonnements définies pour contrôlé environnement.

Cet émetteur ne doit pas être co-localisés ou fonctionner en

conjonction avec une autre antenne ou émetteur.

Cet équipement doit être installé et utilisé avec un minimum de 89 cm de distance entre le radiateur et votre corps.

CE Compliance Statement

This product complies with CE under directive 2014/53/EU. The relevant Declaration of Conformity is available in the following website under model documentation section:
http://www.lowrance.com

Warning

The user is cautioned that any changes or modifications not expressly approved by the party responsible for compliance could void the user's authority to operate the equipment. This equipment generates, uses and can radiate radio frequency energy and, if not installed and used in accordance with the instructions, may cause harmful interference to radio communications. However, there is no guarantee that the interference will not occur in a particular installation. If this equipment does cause harmful interference to radio or television reception, which can be determined by turning the equipment off and on, the user is encouraged to try to correct the interference by one or more of the following measures:

- Reorient or relocate the receiving antenna
- Increase the separation between the equipment and receiver
- Connect the equipment into an outlet on a circuit different from that of the receiver
- Consult the dealer or an experienced technician for help

This radio complies with IEEE and ICNIRP exposure limits for occupational/controlled RF exposure environment at operating duty factors of up to 50% and is authorized by the FCC/ISEDC for occupational use only

Countries of intended use in the EU

AT - Austria	HU - Hungary	PL - Poland
BE - Belgium	IS - Iceland	PT - Portugal
BG - Bulgaria	IE - Ireland	RO - Romania
CY - Cyprus	IT - Italy	SK - Slovak Republic
CZ - Czech Republic	LV - Latvia	SI - Slovenia
DK - Denmark	LI - Liechtenstein	ES - Spain
EE - Estonia	LT - Lithuania	SE - Sweden
FI - Finland	LU - Luxembourg	CH - Switzerland
FR - France	MT - Malta	TR - Turkey
DE - Germany	NL - Netherlands	UK - United Kingdom
GR - Greece	NO - Norway	

Trademarks

Lowrance® and Navico® are registered trademarks of Navico.

NMEA® and NMEA 2000® are registered trademarks of the National Marine Electronics Association.

Navico recommends that you check the radio operating licensing requirements of your country before using this VHF radio. The operator is solely responsible for observing proper radio installation and usage practices.

Notes on MMSI and DSC

The user MMSI (Marine Mobile Service Identity) is a unique nine digit number. It is used on marine transceivers that are capable of using DSC (Digital Selective Calling). Digital Selective Calling offers significant safety and convenience advantages over older VHF radios without this functionality.

→ ***Note:*** many countries do not have radio repeaters that support DSC message relaying. However DSC can still be useful for direct ship-to-ship communication, where the other vessel is also equiped with a DSC capable radio.

You must obtain a user MMSI and enter it into your radio in order to use the DSC functions. Contact the appropriate authorities in your country to obtain an MMSI number - charges may apply. If you are unsure who to contact, consult your Lowrance dealer.

➔ ***Note:*** DSC distress calls generated by this radio are limited to the same range restrictions that apply to regular VHF transmissions. The vessel sending a distress can only rely upon DSC if within range of a GMDSS Coast Radio Station. Typical VHF range may be about 20NM, though this varies greatly depending upon installation, antenna type, meteorological conditions, etc.

About this manual

This manual is a reference guide for installing and operating a Link-6 VHF radio. Important text that requires special attention from the reader is emphasized as follows:

➔ ***Note:*** Used to draw the reader's attention to a comment or some important information.

⚠ **Warning:** ***Used when it is necessary to warn personnel that they should proceed carefully to prevent risk of injury and/or damage to equipment/personnel.***

Contents

8 General Information
9 How to display and navigate menus
12 Key functions

15 The radio menus
15 Scan menu
16 Watch
17 Display
17 Radio setup
20 DSC setup
22 Alarms
23 Reset

24 DSC call menu
24 DSC calls
26 Track buddy
27 Contacts

29 My channels

30 Shortcuts

31 Installation
31 Checklist
32 Installation options
32 Selecting a suitable mounting location
36 First startup configuration

39 Specifications

42 Channel charts
42 EU and INTERNATIONAL channel chart
50 USA channel chart
52 CANADA channel chart

55 Dimensional drawings

1 General Information

Your Link-6 provides the following useful features:

- Prominent channel display
- Adjustable contrast settings for the LCD
- Adjustable keypad backlighting for easy night-time use
- Waterproof and submersible to comply with IPx7
- GPS latitude and longitude (LL) and time display (when connected to a GPS source)
- Choice of High (25 W) or Low (0.75W) transmission power
- 4 key handset mic with built-in speaker
- Powerful 4 W external audio output
- Access to all currently-available marine VHF channel banks (USA, Canada, International) including weather channels where available (model dependant)
- Dedicated CH16/9 key for quick access to the priority (international distress) channel
- TRI key to select DUAL/TRI scan
- Dedicated Wx (Weather) key
- DSC (Digital Selective Calling) capability that meets Global DSC Class D Standards
- Separate CH70 receiver included built in
- DISTRESS call button to automatically transmit the MMSI and position until an acknowledgement is received
- Contacts list that stores up to 50 names with MMSI numbers
- MMSI storage for three favourite groups
- Group Call and All Ships Call facility
- LL position polling information
- Weather alert facility where available (US mode)
- ATIS facility for inland waterways (EU mode)
- With DSC Auto-Switch disable and DSC Test function

How to display and navigate menus

The majority of the buttons, and both of the rotary knobs, can open menus with multiple options.

The channel knob is used to scroll through the options. The currently selected option is indicated by a black highlight bar, and the text is inverted to white.

Selection of a highlighted option is made by pressing the channel knob.

If a list of options is too long for the page, a scroll bar is shown on the right side of the screen. The black rectangle on the scroll bar indicates the highlighted options relative position in the list.

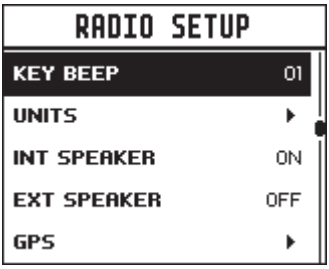

scroll bar indicates further options above and below displayed text

Press the Exit button to step backwards to the previous menu page, or exit the menus completely.

Entry of alphanumeric data

Rotate the channel knob to scroll through the alphanumeric characters.

Press channel knob, to select and step to the next character.

To step backwards, press the MENU button. Press X to cancel entry and return to previous menu.

LCD symbols and meanings

When the Link-6 starts up it momentarily displays the brand, model, region, software version, and MMSI.

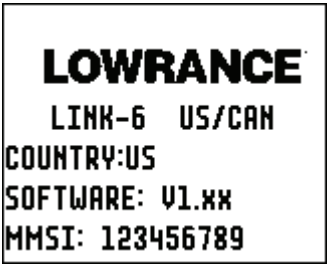

During normal operation, the following icons may be displayed on the screen depending on setup:

Symbol	Meaning
TX	Transmitting
HI	Transmition power
WX	Weather channel stored by user (EU/INT only)
	Weather alert enabled
BUSY	Receiver Busy with incoming signal
	Missed DSC call
DUPLEX	Duplex channel selected (off when Simplex)
LOC	Local mode enabled (used when in areas of high radio traffic, ie inner harbour)
RX ONLY	Channel can only be received on
DSC	DSC functionality is enabled
DSC	DSC functionality is enabled, auto switching is turned off
ATIS	EU models only - must be enabled when in European inland waterways
	Low Battery warning (activates at 10.5 V)
USA	Channel bank is set to USA
INT	Channel bank is set to International. (Channels available depends on country radio cloned for)
CAN	Channel bank is set to Canada
WX	Weather channel bank active (USA/CAN) replaces channelbank icon temporarily
	Channel is saved in the MY CHANNELS list
TYB	Track your Buddy feature is active
TRI	TRI watch or DUAL scan is active
SIM	GPS simulator is active

A typical display:

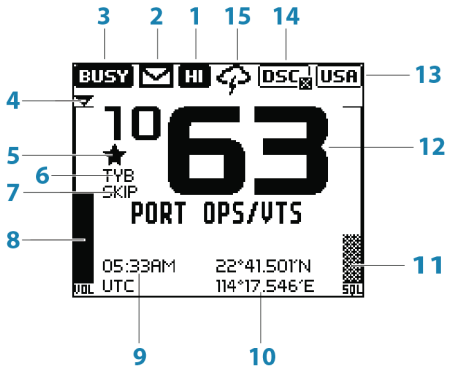

1. Channel is set to high power transmit
2. Missed call in the DSC call log
3. Channel is busy
4. Volume is under active control
5. Current channel saved in 'My Channels'
6. Track your buddy is enabled
7. Current channel will be skipped during a scan
8. Volume level indicator
9. Time (derived from GPS) - UTC offset is applied
10. Latitude/Longitude
11. Squelch level indicator
12. Channel number (2 or 4 digits)
13. The USA channel bank is active
14. DSC functionality is enabled, but autoswitch is off
15. Weather alert function is enabled

Key functions

The following describes the direct functions of the keys/knobs. Where necessary, additional detail on any menus accessed by keys is covered in following chapters.

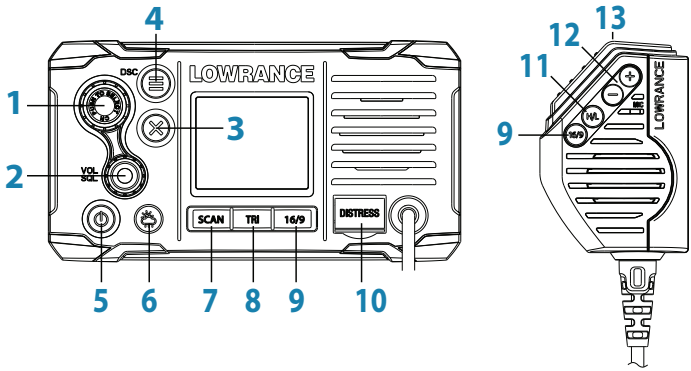

1. **Channel knob / PUSH TO SELECT**
   Turn knob for channel selection, menu scrolling, alphanumeric entry, and fine adjustment of backlight level (dependent on active menu).
   Short press to make selections in menus.
   Long press to open MY CHANNELS.

2. **VOL / SQL**
   Volume and Squelch level.
   Short press knob to select which control to adjust. Which is currently selected is indicated by a small triangular arrow above the level bar for each option. **Turning** the knob clockwise increases setting, anti-clockwise decreases it. Volume control is common to internal and external speaker.
   Long press to open SHORTCUTS.

3. **EXIT**
   Press EXIT when navigating menus, to clear incorrect entries, to exit from a menu without saving changes, and to back up to the previous screen.

4. **DSC CALL / MENU SELECT**
   Short press to enter the DSC Call Menu and make DSC calls.
   Long press to open the MENU SELECT page.

5. **Power / Backlight**
   Short Press to adjust backlight level sequentally.
   Repeated short press of the power button will step through large backlight adjustments. The channel knob can be used to make finer adjustments.
   Long press to turn radio on or off.

6. **Weather Channel**
   Short press (US/CAN models): press to hear the most recently selected NOAA/Canadian weather station.
   For all other models, changes channel to user programmed choice.
   Long press (non US/CAN models only): to store current channel as the

weather channel.

7. SCAN

Short press to enter ALL SCAN mode.
ALL SCAN sequentially scans all channels for activity.
When a signal is received, scanning stops at that channel and the BUSY icon appears on the screen. If the signal ceases for more than 5 seconds, the scan automatically resumes.
Turn the channel knob to temporarily skip over (lock out) a busy channel and resume the scan. The direction turned determines if the scan goes up or down the channel numbers (ie 'forward' or 'reverse'). If it is still busy when the scan completes a full cycle, it will stop again at this channel. Note that it is not possible to skip over the priority channel.
Press ENT to permanently skip over the channel. The SKIP icon will show on the LCD for this channel.
To cancel a skipped channel, select the channel while in normal mode (non-scan mode) then press the ENT key - the SKIP icon will disappear. Repowering the radio also restores all skipped channels.
Press SCAN or EXIT while scanning is active to stop at the current channel and return to normal operation.
Long press SCAN from normal operation to enter the SCAN menu.

8. TRI (WATCH)

Short press to start DUAL WATCH or TRI WATCH (if 'watch' channel set)
Long press to set the current channel as the watch channel.
When a short press is made on the TRI key, the radio will either switch to DUAL or TRI watch mode depending on whether a watch channel has been setup.
Without a watch channel the radio will go to DUAL WATCH, where the channels 'watched' are the current channel and the priority channel (the distress channel, CH16 for most countries).
With a watch channel selected, TRI WATCH is enabled, where the channels 'watched' are the current channel the 'watch' channel, and the priority channel (the distress channel, CH16 for most countries).
If the radio is set to 'Country: USA', two priority channels are watched - Channel 9 and Channel 16.

9. 16 / 9 (radio and handset)

Short press to change to priority channel. Press again to return to original channel.
For US models: Long press to make Channel 09 the priority channel.
The default Priority Channel is CH16.

10. DISTRESS

Short press to start a distress call, where the nature of distress can be selected from a list.
Long press the distress button to initiate an 'undesignated' distress call. This call is broadcast to all DSC equipped radios, so will create an alarm on every DSC radio within range.
If position information is available it will be included in the transmition.

11. H/L (handset mic only)

Transmission Power.

Press to toggle between high (25 W) or low (0.75W) transmission power for the entire channel bank. The HI or LO selection is shown on the LCD.

Some channels allow only low power transmissions. Error beeps will sound if attempting to change the transmission power while on one of these channels.

Some channels allow only low power transmissions initially, but can be overridden to high power by **pressing (and holding) H/L after depressing PTT**. Keep the H/L button pressed down after releasing the PTT button, if wanting to transmit again on high power.

12. + / - (handset mic only)

Channel change.

Short press (+) goes up one channel, or (-) goes down one channel. Holding either key will, after a short delay, step rapidly through the channels.

13. PTT (handset mic only)

Push-to-talk button.

Press button to transmit. Only depress for duration of message to be broadcast. Radio can't receive while it is transmitting.

2 The radio menus

A long press of the MENU button opens MENU SELECT page. The following shows the menu structure (top and 2nd level only):

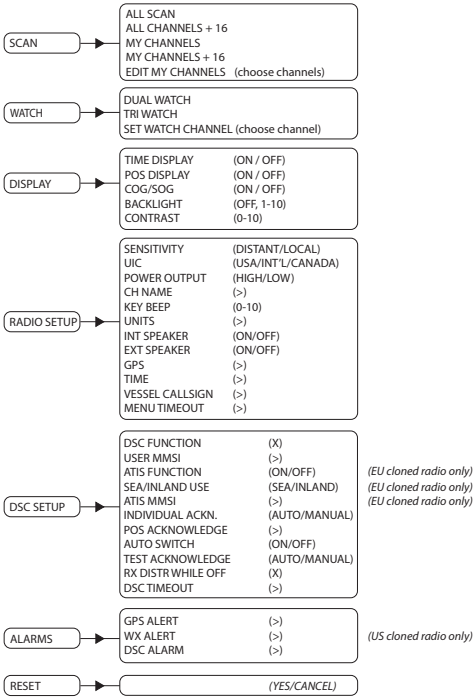

Key:

(>) further menu options

(X) toggle selection. 'X' means option enabled.

Scan menu

This menu is for choosing a scan mode to enable, as well as selection of the channels scanned per the MY CHANNELS list.

→ ***Note:*** Scanning is not available if ATIS mode is turned on.

All scan

Scans all channels cyclically.

All channels + 16

Scans all channels cyclically, but checks the priority channel after every channel step

My channels

Scan all channels selected in EDIT MY CHANNELS

My channels + 16

Scans all channels selected in EDIT MY CHANNELS, while also checking the priority channel after every channel step.

Edit my channels

Allows creation of a custom list of channels - used in a MY CHANNELS scan.

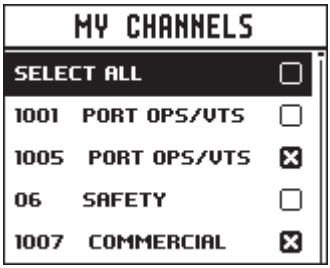

Watch

This menu is for choosing a watch mode to enable, as well as selection of the watch channel. Watch modes can be thought of as a channel scan on a subset of channels, where scanned channels are 'listened' to briefly every 3 seconds, to determine if there is any active radio communication.

→ ***Note:*** Watch modes are not available if ATIS mode is turned on.

Dual watch

Select this to watch the current channel and the priority channel (Channel 16).

TRI watch

Select this to watch the current channel, the user selected 'watch' channel, and the priority channel (Channel 16).

Set Watch Channel

Allows a watch channel to be selected from all available channels. Selected channel is used by TRI WATCH mode.

→ ***Note:*** If the radio is configured for USA market, two priority channels are watched: Channel 9 and Channel 16.

Display

This menu allows the user to partially customize the screen information displayed, and adjust the screen for best visibility to suit the user and operating conditions.

Time display

Select to switch the display of Time to ON or OFF.
If turned ON, the display of COG/SOG is turned off, due to screen space constraints.

LOC (Local Time) is displayed below the time if a UTC (Coordinated Universal Time) offset has been entered; otherwise UTC is shown in it's place if no offset has been applied.

POS display

Select to switch ON or OFF the display of position provided from connected GPS.

COG/SOG

Select to switch ON or OFF the display of COG/SOG provided from connected GPS.
If turned ON, Time display is turned OFF, due to screen space constraints.

Backlight

Select to make adjustment to the backlight level using the channel knob. Range is OFF, then 1 to 10.

Press MENU SELECT button to activate night mode (inverts display).

Contrast

Select to make adjustment of the screens contrast, using the channel knob. Range is 00 to 10.

Radio setup

The Radio setup menu covers settings that are typically configured at installation, and seldom need changing.

Local/Dist

Use LOCAL/DIST to improve the sensitivity of the receiver either locally (LOCAL) or over distances (DIST).

LOCAL is not recommended for use in open sea conditions. It is

designed for use in areas of high radio noise; for example, close to a busy port or city.

UIC

Select between USA, International or Canadian channel banks. The selected channel bank is displayed on the LCD along with the last used channel. All the channel charts are shown in "Channel charts" on page 42.

→ ***Note:*** UIC may not be available on all models.

Power output

Select to toggle between high (25 W) or low (0.75 W) transmission power for the entire channel bank. The HI or LO selection is shown on the LCD. Low power transmission draws significantly less current (about 1/4) from the battery, so is recommended for short range communication, and where battery capacity is limited.

→ ***Note:*** some channels can't be switched to high power, and will show LO regardless of power output setting in menu.

CH name

CH NAME gives you the option to edit or delete the channel name descriptions displayed on the screen.

Select to edit the existing description of the channel currently in use. It can be a maximum of 12 characters long.

Key beep

Select to allow adjustment of key beep volume.

Volume can be set from 00 - 10 (where 00 is off, and 10 is loudest).

Units

Select SPEED to choose whether displayed in KNOTS, MPH, or KPH

Select COURSE to toggle between displaying in MAGNETIC or TRUE. A true north heading is corrected for magnetic declination. A magnetic north heading source must also output magnetic variation data if the heading is to be displayed as a true north value.

Int speaker

Select to switch the radio's internal speaker ON or OFF.
Incoming voice calls and audible DSC alerts are prevented, but key beeps and alarms will still be audible.

Ext speaker

Select to switch the radio's external speaker ON or OFF.
Incoming voice calls and DSC alerts are prevented, but key beeps and alarms will still be audible.

GPS

MANUAL

Select MANUAL to enter a GPS position (and time) from another source when radio is not receiving position data from an external antenna, or no antenna is connected.
The manually entered GPS position can be used in DSC calls.

If POS Display is turned ON, the latitude and longitude are shown on the screen with a prefix 'M' indicating manual entry.

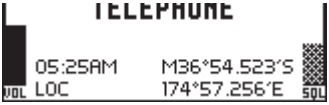

→ ***Note:*** The manual entry is cleared if a real GPS position is received via the NMEA 0183 port.

CHECKSUM

Select to toggle ON or OFF. When enabled, data will be ignored if checksum does not match (ie no tolerance to data corruption).

GPS SIM

Select to toggle ON or OFF.

Whenever the GPS Simulator is turned ON, simulated Speed Over Ground (SOG), Course Over Ground (COG), and LL position appear on the screen. This is for the purpose of demonstration only. The SIM icon is displayed to warn the user it is in this mode.

→ ***Note:*** It is not possible to send a DSC transmission when in Simulator mode.

→ ***Note:*** The GPS Simulator is set to OFF whenever the radio has the power cycled, or real GPS data is available through the COM port.

Time

Time Offset

Select TIME OFFSET to enter the difference between UTC and local time. 15 minute increments can be used with a maximum offset of ±13 hours. Does not automatically adjust for Daylight Savings Time.

Time Format

Select to toggle between 12 and 24 hour format.

Vessel call sign

Select to enter vessel callsign. Not used by radio - purely for record keeping purposes.

Menu timeout

An inactivity timeout can be set up to return the radio to normal operational mode when no activity is seen from the radio operator while radio is displaying a menu.

Select between NONE, 5 MINS, 10 MINS, and 15 MINS.

(default is 10 MINS).

→ ***Note:*** A different timeout is used when the radio is left in a DSC call. See "DSC timeout" on page 22

DSC setup

DSC Function

It's recommended DSC functionality is always enabled, unless operating the vessel in an ATIS region. An MMSI number must be entered in radio before the DSC function can be enabled.

User MMSI

Enter an MMSI number to access the radio's DSC functionality. This unique identifier must be supplied a local radio spectrum authority. **DO NOT** enter a random 'made up' number.

→ ***Note:*** Contact a Lowrance dealer if you need to change your MMSI after initial input.

ATIS function (EU ATIS radios only)

ATIS must be enabled when navigating inland waterways in signatory countries of the RAINWAT agreement. It should NOT be used outside these regions. DSC functionality is not possible when ATIS is turned on.

Sea/Inland mode (EU ATIS radios only)

Toggles between DSC (Sea) and ATIS (Inland) modes. Does not allow both to be selected at the same time.

ATIS ID (EU ATIS radios only)

Enter an ATIS number to access the radio's ATIS functionality. This unique identifier must be supplied a local radio spectrum authority. DO NOT enter a random 'made up' number.

→ ***Note:*** Contact a Lowrance dealer if you need to change your ATIS ID after initial input.

Individual acknowledge ("INDIVIDUAL ACK")

The radio can be configured to automatically acknowledge an incoming 'individual' call, or require manual intervention:

AUTO

After a 15 second delay, radio will switch to requested channel, and send an automatic acknowledgement, ready for conversation. US model default.

MANUAL

Operator must manually choose to send acknowledgement, as well as change to requested channel. EU model default.

→ ***Note:*** this does not apply for calls types other than 'Individual'.

Position request acknowledge ("POS ACK")

The radio can be configured to automatically acknowledge an incoming position request, require manual intervention to acknowledge, or simply ignore them:

AUTO

Sends current position automatically to calling radio.

MANUAL

Operator must manually choose to send position information.

OFF

All incoming position requests are ignored.

Auto channel switch ("AUTO SWITCH")

This setting only relates to All Ships and Group DSC calls.

When a DSC call is received, it may include a request to change to a specific channel for subsequent communications. With AUTO SWITCH set to ON, the radio will switch channels after a 10 second delay. The radio will also display options to switch immediately, or reject the request and stay on the current channel.

With AUTO SWITCH set to OFF, any channel change request will require manual confirmation.

Test acknowledge ("TEST ACK")

The radio can be configured to automatically acknowledge an incoming test call, or require manual intervention:

MANUAL

Operator must manually choose to send acknowledgement, or cancel.

AUTO

The DSC test call is automatically acknowledged after a 10 second delay.

Receive distress while off

Enabling this feature will allow the radio to raise an alert for DSC distress calls, even when the DSC feature is turned off. This will work regardless of whether or not an MMSI number has been entered.

DSC timeout

An inactivity timeout can be set up to return the radio to normal operational mode when no activity is seen from the radio operator while radio is engaged in a DSC call.

Distress calls have a discrete timer from that used for all other DSC calls:

Distress
Select between NONE, 5 MINS, 10 MINS, and 15 MINS.
(default is NO TIMEOUT).
Non Distress
Select between NONE, 5 MINS, 10 MINS, and 15 MINS.
(default is 15 MINS).

Alarms

GPS alert

The GPS alert is a warning to the user that there is either no GPS connected, or the connected GPS is not outputting position data. It comprises of an audible alarm and visual alarm (screen flash and warning text);

GPS alert function

Turns ON or OFF all alerts for missing GPS data, including audible alarm, screen flash, and warning text.

Alert volume

Select between HIGH, LOW, and OFF.

Screen flash

Select between ON and OFF.

WX alert (US/CAN models only)

The WX alert is a warning to the user that a special weather station alert has been received.
It comprises of an audible alarm and visual alarm;

WX alert function

Turns ON or OFF the radios response to weather alerts. This includes; automatic switching to the last used weather channel, audible alarm, screen message, and flashing backlight.

Alert volume

Select between HIGH, LOW, and OFF.

Screen flash

Select between ON and OFF.

DSC Alarm

The alert volume and screen flash for some incoming call types can be altered.
SAFETY, ROUTINE and URGENCY calls can individually be set to have:

Alert volume

HIGH, LOW or OFF.

Screen flash

ON or OFF.

→ ***Note:*** it is not possible to alter distress call alert settings

Reset

Use this setting to return every setting to the factory defaults except all MMSI settings, entries in your buddy list and any customized channel names.

3 DSC call menu

DSC (Digital Selective Calling) is a semi-automated method of establishing VHF, MF, and HF radio calls. One big advantage that DSC enabled radios offer is that they can receive calls from another DSC radio without being on the same channel as the calling radio. The calling radio will provide details on what channel to switch to so that voice communication can be established. There are various types of DSC calls - the type of call made determines information sent with the call, and how other radios respond to the incoming call.

The following options are available when the DSC button is pressed;

DSC calls

There are four call types, as well as related options, that can be accessed from this menu;

Individual

Used to place a call to a single other vessel.

The call can be initiated by selected an existing vessel in the CONTACTS; by entering in a new vessel's MMSI (MANUAL); or by selecting a vessel in the RECENT list.

When the SEND TO page is displayed, turn the channel knob to select the channel to use for voice communication.

Distress

The distress menu can be accessed via the DSC Calls menu, or directly by a short press of the Distress key on the front of the radio.

The nature of the distress call must be selected from the list of options - this will be displayed on other radios receiving the call.

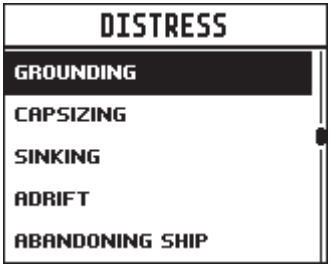

After the Distress Call is sent, the radio waits for an acknowledgment.

```
CALL SENT
DISTRESS
UNDESIGNATED
WAITING FOR ACK
RESEND IN 03:38
≡ OPTION  ✕ CANCEL
```

The Distress Call is automatically re-sent every 3.5 to 4.5 minutes until a distress acknowledgement is received.

Alternatively the operator can select:

RESEND (under OPTION - access by pressing the Menu/DSC button) used to immediately resend the Distress Call

PAUSE (under OPTION - access by pressing the Menu/DSC button) used to pause the automatic Distress Call resend timer

CANCEL (press 'X' button) to cancel the Distress Call

If a distress cancel is sent, the display shows PTT --> REASON, prompting the operator to state the reason for the cancellation.

```
CALL SENT
DISTRESS CANCEL
SENT
PTT --> REASON
```

After a DISTRESS ACK is received, the alert should be silenced, and the reason for distress should be clearly stated, pressing the 'PTT' on the MIC and talking.

The following information (if available) is contained in the Distress Call:

- Nature Of Distress (if selected)
- Position information (the latest GPS or manual input position is held for 23.5 hours, or until the power is turned OFF).

Group

Used to place a call to a known group of vessel, all using the same 'Group Call ID' (GCID) number.

The call can be initiated by selecting an existing group from the group list, by entering a new GCID, or by selecting a group from the RECENT list.

When the SEND TO page is displayed, turn the channel knob to select the channel to use for voice communication.

All ships

Used to place a call to ALL DSC equiped vessels in range, much like a distress call. The nature of the call must be selected, and can be either SAFETY or URGENCY.

When the SEND TO page is displayed, turn the channel knob to select the channel to use for voice communication.

Call logs

Shows a record of SENT, RECEIVED, and DISTRESS calls.

POS request

Used to send a postion request to another vessel. The call can be initiated by selected an existing vessel in the CONTACTS, by entering in a new vessel's MMSI (MANUAL), or by selecting a vessel in the RECENT list.

As no voice communication is required, no option is given to select a ship-ship channel.

POS report

Used to send a position report to the vessel being called.

DSC test

Used to place a TEST call to a single other vessel. The call can be initiated by selected an existing vessel in the CONTACTS, by entering in a new vessel's MMSI (MANUAL), or by selecting a vessel in the RECENT list.

Comms channel selection is not possible.

MMSI/GPS

Shows entered MMSI number and GPS fix information.

Track buddy

Up to 5 vessels from the Contacts list can be sent recurring position requests, at an adjustable time interval. The buddy list is saved permanently in memory, and tracking can be turned on and off as required.

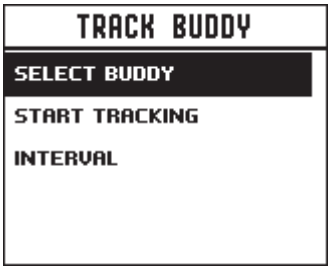

Select buddy

Shows any existing 'buddies' already selected, and the option to add more. Selecting a 'buddy' already in the buddy list will remove them.

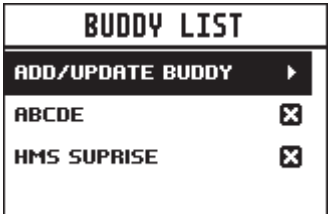

Choose ADD/UPDATE BUDDY to view the full contacts list, and choose who to add for tracking.

Start tracking / Stop tracking

Selecting START TRACKING option initiates tracking of buddies in the Track buddy list that have been set to tracking ON. The radio will show a screen indicating which buddy is being called. If there is no acknowledgement, the radio will retry the call after a few seconds. Only one retry is made per tracking interval.
If tracking is already taking place, the START TRACKING text is replaced with STOP TRACKING.

Interval

The frequency that 'buddys' are polled with position requests can be adjusted, varying between 5 to 60 minutes.

Contacts

Used for the administation and calling of all individual Contacts as well as Groups.

View/Add Contact

Use this to store the names and associated MMSI's of up to 50 vessels to be called regularly using DSC. Contacts are stored by name, in alphabetical order.

Select ADD NEW to create a new contact.

Selecting an existing name in the Contacts list gives the options to place a DSC call, make a position request, edit the contact, or delete the contact.

View/Add Group

Use this to create, edit, or delete up to 20 vessel groups, which are stored in alphanumeric order. Only a name and a Group Call ID (GCID) are required to set up a group. A GCID always starts with 0; the remaining digits can be set to whatever the user desires. All vessels intended to be in the same group must have a suitable DSC radio, and have the identical GCID number entered.
Selecting an existing name in the group list gives the option to edit, delete, or call the group.

→ ***Note:*** Adding a group to this list will in turn make the radio respond to a group call made from any other radio with the same group number in it's memory.

4 My channels

The MY CHANNELS page is accessed by a long press of the channel knob.
This page provides a shortcut to frequently accessed channels.
The first time this page is opened, the entire channel list is shown so that the desired shortcut channels can be selected.

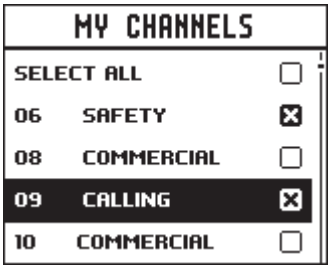

Subsequent opening of this page will show a list of only the selected channels. Choosing one of the channel options immediately exits the page and sets the radio to that channel.

The available shortcut channels can be changed at any time using EDIT MY CHANNELS.

→ ***Note:*** Channels on this list are also used in some SCAN options. Access to edit the MY CHANNELS list is also available from the SCAN menu.

5 Shortcuts

The Shortcuts page is accessed by a long press of the VOL/SQL knob.
This page is provided as a shortcut to frequently accessed settings.
The shortcut options available on this page are subject to selections made in ADD/EDIT SHORTCUTS.

Add/Edit shortcuts

Choose from the list of options which menu options should be added as shourtcuts;

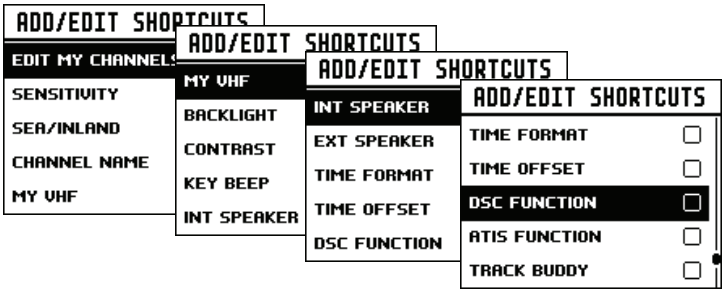

→ ***Note:*** The MY VHF page is only available to the operator when enabled as a shortcut - it can't be accessed via another menu.
It's purpose is solely for displaying radio information in one easy to access location.
It provides detail on the MMSI number, GPS data status, and Vessel Callsign (if entered).

Once the desired shortcuts have been selected, they are accessible directly from the Shortcuts page:

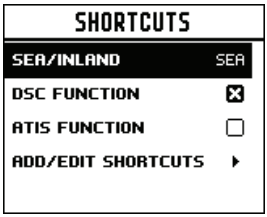

6 Installation

This Lowrance DSC VHF radio is designed to generate a digital maritime distress call to facilitate search and rescue. To be effective as a safety device, this radio must be used only within the geographic range of a shore-based VHF marine Channel 70 distress and safety watch system. The geographic range may vary but under normal conditions is approximately 20 nautical miles.

Checklist

The following items should be supplied in the box. Check before starting the installation and contact your dealer if an item is missing.

→ ***Note:*** An antenna is not provided. Consult your Lowrance dealer for advice on selecting the correct antenna for your installation:

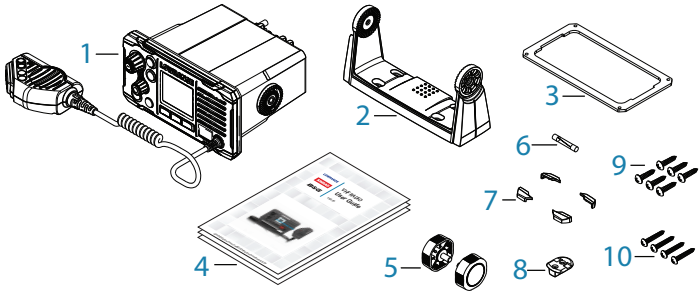

1. VHF radio with hand mic
2. Bracket for gimbal mounting
3. Gasket for recessed mounting
4. Documents:
   - user's manual
   - warranty card
   - mounting template
5. Knobs for bracket
6. 8 A (3 AG) spare fuse
7. Mounting screw hole covers
8. Bulkhead mount for hand mic
9. 6 pcs 3.5 x 20 mm, stainless steel, panhead pozi
10. 4 pcs 4 x 25 mm, stainless steel, panhead pozi

Installation options

There are two mounting options for the radio:

- Bracket mount:

  Using the supplied gimballing bracket the radio can be mounted to either sit on top of, or hang underneath any flat horizontal surface. The radio can be removed for storage and the viewing angle can be adjusted.

- Flush mount:

  The radio is recessed into a cavity, showing only the face of the radio. The radio fixture is permanent and the viewing angle cannot be adjusted.

Selecting a suitable mounting location

Whichever installation method you choose, please check the following before doing any cutting or drilling. The chosen location must:

- Be at least 1 m (3') from the antenna
- Allow easy access to the rear of the radio for connection to the 12 V DC electrical source, the antenna and any network wiring
- Be at least 45 cms (1.5') from a compass to avoid creating magnetic deviation of the compass.
- Have a suitable space close by for installing the microphone bulkhead mount
- Provide easy access to the controls on the front panel

Viewing angle

The VHF radio has a large LCD screen with the optimum horizontal and vertical viewing angles within approx. +/-20 deg. Ensure the chosen location provides a suitable view of the display. Ideally, the user should be directly in front of the display or no more than +/-20 deg from the front of the display.

→ ***Note:*** If unsure, temporarily power up the radio and ensure the location is suitable.

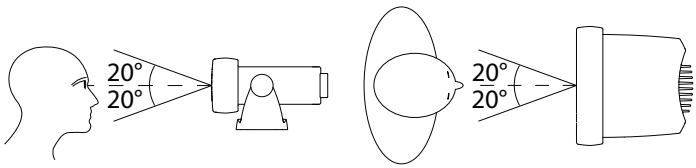

Bracket installation

The gimbal bracket provides an adjustable viewing angle with a 20º tilt range, so ensure the selected mounting location will provide the desired viewing and operating conditions:

1. Hold the bracket at the chosen location and use a soft pencil to mark the screw hole positions onto the mounting surface.
2. Use a 3mm (1/8") drill bit to drill the 4 pilot holes.
3. Using a Philips screwdriver, secure the bracket using the supplied 4x25mm self-tapping screws to the mounting location.
4. Fit the radio into the bracket.
5. Insert the two mounting knobs through the holes and tighten them sufficiently to hold the radio at the desired viewing angle.
6. Fit the mounting clips to the front of the radio to cover dash mount screw holes.

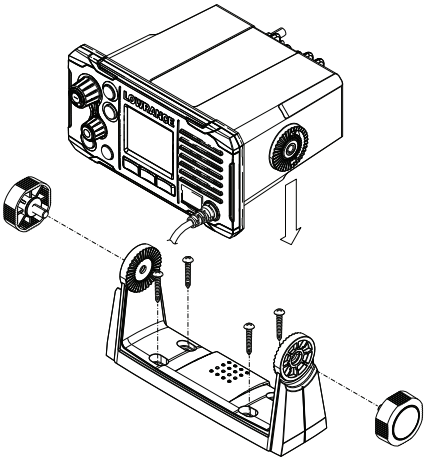

Flush installation

1. Tape the installation template onto the chosen mounting location.
2. Cut out the area marked by the solid dark line (the dashed line indicates the total area that will be covered by the radio fascia after installation).
3. Use a 2.5mm (3/32") drill bit to drill the 4 pilot holes.
4. Remove the installation template.
5. Fit the gasket to the radio.
6. Slide the radio into the cavity.
7. Using a Philips screwdriver, secure the radio using the supplied 3.5x20mm self-tapping screws to the mounting location.
8. Fit the mounting clips to cover the 4 mounting screws.

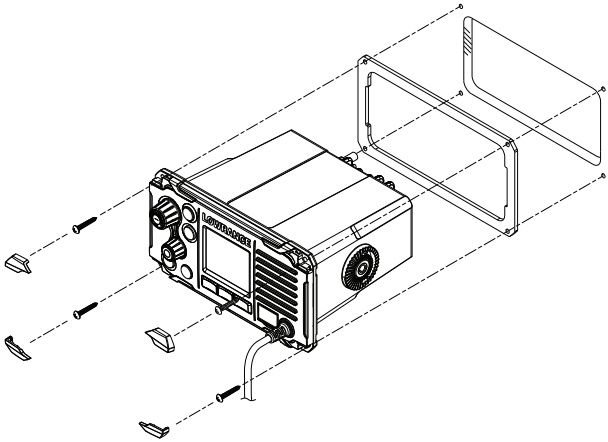

Install the hand mic bulkhead bracket

1. Hold the hand mic bulkhead bracket at the chosen location and mark the screw hole positions on the mounting surface.

→ ***Note:*** Ensure that the microphone curly cable will comfortably reach this location BEFORE you drill.

2. Use a 2.5mm (3/32") drill bit to drill the 2 pilot holes.
3. Using a Philips screwdriver, secure the Mic mount using the supplied 3.5x20mm self-tapping screws to the mounting location.

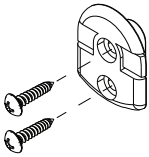

4. Hang the fist mic on the mount.

Connect the radio wiring

All wiring on the radio should be done with the vessel power supply turned off. While radio power is polarity protected, the fuse will blow if connection is made wrong way round. Ensure any unused bare wires are isolated from each other, to prevent the potential of a short circuit.

Warning: never operate the radio without the antenna connected. This may damage the transmitter.

The connectors are on the rear of the base unit, as follows:

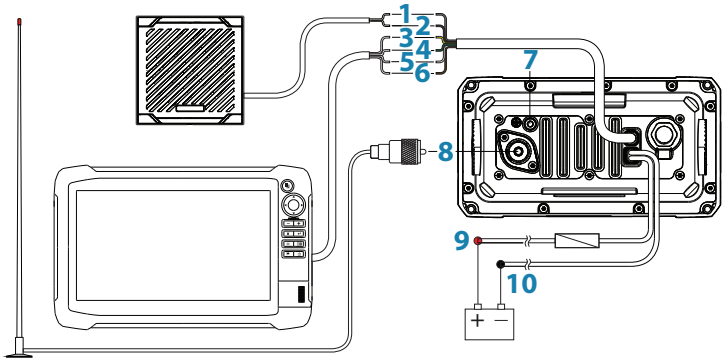

1. External speaker + (gray): connect to 4 Ohm, 4 Watt (minimum) external speaker positive
2. External speaker - (gray/black): connect to 4 Ohm, 4 Watt (minimum) external speaker negative
3. NMEA 0183 RX_A (yellow): connect to TX_A of chart plotter, or active GPS antenna
4. NMEA 0183 RX_B (green): connect to TX_B of chart plotter, or active GPS antenna
5. NMEA 0183 TX_A (white): connect to RX_A of chart plotter
6. NMEA 0183 TX_B (brown): connect to RX_B of chart plotter
7. GND: optional ground connection. May help with induced noise issues.
8. Antenna: connect to a marine VHF antenna using 50 ohm cable fitted with a PL-259 connector
9. Battery + (red): connect to vessel's 12 V DC, via a switch panel or breaker (comes with inline 8 amp fuse ready fitted)
10. Battery - (black): connect to vessel's negative busbar

→ ***Note:*** external speaker and plotter connections are optional.

First startup configuration

The first time the radio is powered up, the user is prompted to make a series of setting selections in order to allow the radio to perform to its full potential. Some steps must be completed; some are optional and can be completed later. The steps are outlined below for reference:

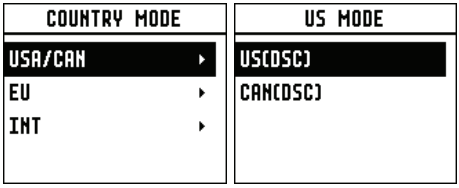

Select the region and country the radio will be operated in.

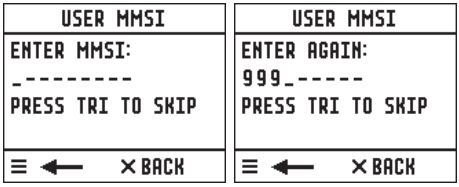

Enter MMSI number if known, or skip to next step. Re-enter number to confirm correct entry.

→ ***Note:*** MMSI entry can only be done once. Changing the MMSI requires radio be returned to a Lowrance dealer.

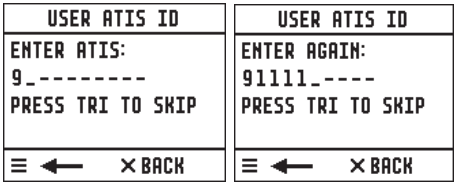

For some EU region radios only: Enter the ATIS ID number. Re-enter number to confirm correct entry.

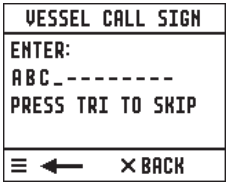

Enter vessel call sign if known, or skip to next step.

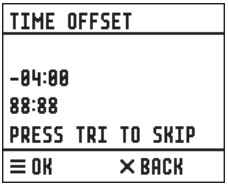

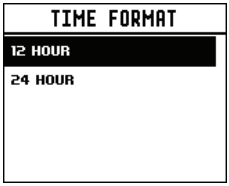

Set the time offset for your region. Choose whether to display time in 12 or 24 hour.

MMSI and ATIS ID

The MMSI is a unique 9 digit number and the ATIS ID is a 10 digit number. They are used on marine transceivers that have DSC (Digital Select Calling) functionality.

- An MMSI remains with a vessel, even if the vessel is sold on.
- An MMSI has 9 numeric digits (xxxxxxxxx). Your MMSI must not commence with a '0'.
- A Group MMSI begins with '0' followed by 8 numeric digits (0xxxxxxxx).
- A Coast Station MMSI begins with 00 followed by 7 numeric digits (00xxxxxxx).
- By law, you are not able to change your MMSI once it is entered into the radio. This is why there is the confirmation screen when entering the MMSI.
- An ATIS ID is only required in certain EU countries when navigating some inland waterways. It is usually a different number to your MMSI.
- If you need to have the MMSI in the radio changed, the radio must be taken back to your Lowrance dealer.

ATIS

Automatic Transmitter Identification System (ATIS) is required for vessels making VHF transmissions whilst on the inland waterways of the Regional Arrangement Concerning the Radiotelephone Service on Inland Waterways (RAINWAT) signatory countries.

RAINWAT is an agreement to implement common principles and rules for the safe carriage of people and goods on Inland Waterways. The signatory countries are: Austria, Belgium, Bulgaria, Croatia, the Czech Republic, France, Germany, Hungary, Luxembourg, Moldova, Montenegro, the Netherlands, Poland, Romania, Serbia, the Slovak Republic and Switzerland.

Where a VHF is required on the inland waterways of the signatory countries, this must be capable of ATIS transmissions, and have the feature activated. An ATIS number is required which is issued by Ofcom when you add one or more pieces of ATIS equipment to your Ship Radio Licence.

If you don't have a user MMSI or ATIS ID, contact the appropriate licensing authority in your country. If you're unsure who to contact, consult your Lowrance dealer.

7 Specifications

GENERAL

Power supply:	12 V DC battery system
Nominal operating voltage:	+12 V DC
Low battery alert:	10.5 V DC +/- 0.5 V
Over voltage protection:	> 15.8 V +/- 0.5 V
Current drain (Transmit):	≤ 6 A @ 25 W / 1.5 A @ 0.75W (12 V DC)
Current drain (Receive):	Less than 450 mA in standby
Replacement Fuse:	8 A, Glass type 3 AG; 32 mm (1.25")
Temperature range:	-20 ºC to +55 ºC (-4 ºF to 131 ºF)
Usable channels:	International, USA, Canada, Weather (country specific)
Mode:	16K0G3E (FM) / 16K0G2B (DSC)
DSC mode:	Class D (Global) with dual receiver (individual CH70)
Standards - EU:	EN60950-1, IEC 60529, EN 60945, EN 301 843-1 V2.1.1, EN301 843-2 V2.1.1, EN 301 025 V2.1.1, EN 300 698 V2.1.1
Standards - US/CAN:	FCC Part 80, RSS-Gen Issue 4, RSS-182 Issue 5
Standards - INT:	AS/NZS 4415.1:2003
Frequency range (Transmitter):	156.025 - 157.425 MHz
Frequency range (Receiver):	156.050 - 163.275 MHz
Channel spacing:	25 KHz
Frequency stability:	± 5 ppm
Frequency control:	PLL

PHYSICAL

LCD display (viewing):	42 mm x 34 mm (1.65" x 1.3"), FSTN
Contrast control:	Yes
Backlight control:	Yes
Antenna connector:	SO-239 (50 ohm)
Waterproof:	IPx7
Dimensions:	W=166.7 mm (6.56") x H=89.2 mm (3.5") x D=161.4 mm (6.35") - without bracket
Weight:	1.18 kg (2.6 lbs)

Compass safe distance:	0.5 m (1.5')
NMEA 0183 port:	Yes
NMEA 0183 input:	RMC, GGA, GLL, GNS
NMEA 0183 output:	Yes, DSC (for DSC call), DSE (for enhanced position)
NMEA 2000 port:	No
External speaker:	Yes

FEATURES

Flush mount kit	Yes
Local/Distant control:	Yes
Position polling:	Yes
Group call:	Yes
Call logs:	Yes - 20 individual and 10 distress
Channel naming:	Yes
Tri watch:	Yes
Favourite channel scan:	Yes
All scan:	Yes
User programmable MMSI:	Yes
MMSI and NAME directory:	Yes - 20 numbers & group

TRANSMITTER

Frequency error:	≤± 1.5 KHz
Output power:	25 W (23 ± 2) / 0.75 W (0.8 ± 0.2)
Transmitter protection:	Open / short circuit of antenna
Max Frequency deviation:	≤± 5
Spurious & harmonics Hi/Lo:	≤ 0.25 µ W
Modulation Distortion ±3KHz:	≤ 10 %
S/N at 3KHz Deviation:	≥ 40 dB
Audio Response at 1KHz:	+1 to -3dB of 6 dB/octave from 300 hz to 3 KHz
DSC TX deviation at 1.3K:	2.6 ± 0.26 KHz
DSC TX deviation at 2.1K:	4.2 ± 0.42 KHz
ATIS TX deviation at 1.3 KHz:	1.3 ± 0.13 KHz
ATIS TX deviation at 2.1 KHz:	2.1 ± 0.21 KHz

RECEIVER

12dB SINAD sensitivity:	0.25 µV (distant) / 0.8 µV (local)
20db SINAD sensitivity:	0.35 µV
Adjacent CH selectivity:	more than 70 db
Spurious response:	more than 70 db
Intermodulation rejection:	more than 68 db
Residual noise level:	more than -40 db unsquelched
Audio output power:	2 W (with 8 ohm at 10% distortion)
	4 W (with 4 ohm external speaker

→ ***Note:*** Specifications are subject to change without notice.

8 Channel charts

The following channel charts are provided for reference only and may not be correct for all regions. It is the operators responsibility to ensure correct channels and frequencies are used for local regulations.

EU and INTERNATIONAL channel chart

The following is a table of transmiting frequencies in the VHF maritime mobile band.

→ ***NOTE:*** For assistance in understanding the Table, see Notes a) to zz) below. (WRC-15)

→ ***NOTE:*** The Table below defines the channel numbering for maritime VHF communications based on 25 kHz channel spacing and use of several duplex channels. The channel numbering and the conversion of two-frequency channels for single-frequency operation shall be in accordance with Recommendation ITU-R M.1084-5 Annex 4, Tables 1 and 3. The Table below also describes the harmonized channels where the digital technologies defined in the most recent version of Recommendation ITU-R M.1842 could be deployed. (WRC-15)

Channel designator	Transmitting frequencies (MHz) From ship stations	From coast stations	S/D/R	Channel name	Restrictions	Notes
01	156.050	160.650	D	TELEPHONE		m)
02	156.100	160.700	D	TELEPHONE		m)
03	156.150	160.750	D	TELEPHONE		m)
04	156.200	160.800	D	PORT OPS		m)
05	156.250	160.850	D	PORT OPS/ VTS		m)
06	156.300	156.300	S	SAFETY		f)
07	156.350	160.950	D	PORT OPS		m)
08	156.400	156.400	S	COMMERCIAL		
09	156.450	156.450	S	CALLING		i)
10	156.500	156.500	S	COMMERCIAL		h), q)
11	156.550	156.550	S	VTS		q)
12	156.600	156.600	S	PORT OPS/ VTS		
13	156.650	156.650	S	BRIDGE COM		k)
14	156.700	156.700	S	PORT OPS/ VTS		
15	156.750	156.750	S	PORT OPS	1W	g)
16	156.800	156.800	S	DISTRESS		f)
17	156.850	156.850	S	SAR	1W	g)
18	156.900	161.500	D	PORT OPS		m)
19	156.950	161.550	D	SHIP-SHORE		t), u), v)
20	157.000	161.600	D	PORT OPS		t), u), v)
21	157.050	161.650	D	PORT OPS		w), y)
22	157.100	161.700	D	PORT OPS		w), y)
23	157.150	161.750	D	TELEPHONE		w), x), y)
24	157.200	161.800	D	TELEPHONE		w), ww), x), y)
25	157.250	161.850	D	TELEPHONE		w), ww), x), y)
26	157.300	161.900	D	TELEPHONE		w), ww), x), y)
27	157.350	161.950	D	TELEPHONE		z)
28	157.400	162.000	D	TELEPHONE		z)
60	156.025	160.625	D	TELEPHONE		m)
61	156.075	160.675	D	PORT OPS		m)
62	156.125	160.725	D	PORT OPS		m)
63	156.175	160.775	D	PORT OPS		m)
64	156.225	160.825	D	TELEPHONE		m)
65	156.275	160.875	D	PORT OPS		m)
66	156.325	160.925	D	PORT OPS		m)
67	156.375	156.375	S	BRIDGE COM		h)
68	156.425	156.425	S	SHIP-SHIP		

69	156.475	156.475	S	PORT OPS		
71	156.575	156.575	S	PORT OPS		
72	156.625	156.625	S	SHIP-SHIP		i)
73	156.675	156.675	S	PORT OPS		h), i)
74	156.725	156.725	S	PORT OPS		
75	156.775	156.775	S	PORT OPS	1W	n), s)
76	156.825	156.825	S	SHIP-SHIP	1W	n), s)
77	156.875	156.875	S	SHIP-SHIP		
78	156.925	161.525	D	SHIP-SHORE		t), u), v)
79	156.975	161.575	D	PORT OPS		t), u), v)
80	157.025	161.625	D	PORT OPS		w), y)
81	157.075	161.675	D	TELEPHONE		w), y)
82	157.125	161.725	D	TELEPHONE		w), x), y)
83	157.175	161.775	D	TELEPHONE		w), x), y)
84	157.225	161.825	D	TELEPHONE		w), ww), x), y)
85	157.275	161.875	D	TELEPHONE		w), ww), x), y)
86	157.325	161.925	D	TELEPHONE		w), ww), x), y)
87	157.375	157.375	S	TELEPHONE		z)
88	157.425	157.425	S	TELEPHONE		z)
1019	156.950	156.950	S	TELEPHONE		
1020	157.000	157.000	S	TELEPHONE		
1078	156.925	156.925	S	TELEPHONE		
1079	156.975	156.975	S	TELEPHONE		
2006	160.900	160.900	S	TELEPHONE		r)
2019	161.550	161.550	S	TELEPHONE		
2020	161.600	161.600	S	TELEPHONE		
2078	161.525	161.525	S	TELEPHONE		
2079	161.575	161.575	S	TELEPHONE		

Editorial note: The note numbering below is provisional and will be aligned during final preparations of the new edition of the Radio Regulations.

Notes referring to the Table

General notes:

a) Administrations may designate frequencies in the inter-ship, port operations and ship movement services for use by light aircraft and helicopters to communicate with ships or participating coast stations in predominantly maritime support operations under the conditions specified in Nos. **51.69**, **51.73**, **51.74**, **51.75**, **51.76**, **51.77** and **51.78**. However, the use of the channels which are shared with

public correspondence shall be subject to prior agreement between interested and affected administrations.

b) The channels of the present Appendix, with the exception of channels 06, 13, 15, 16, 17, 70, 75 and 76, may also be used for high-speed data and facsimile transmissions,subject to special arrangement between interested and affected administrations.

c) The channels of the present Appendix, with the exception of channels 06, 13, 15, 16, 17, 70, 75 and 76, may be used for direct-printing telegraphy and data transmission, subject to special arrangement between interested and affected administrations. (WRC-12)

d) The frequencies in this table may also be used for radio communications on inland waterways in accordance with the conditions specified in No.**5.226**.

e) Administrations may apply 12.5 kHz channel interleaving on a non-interference basis to 25 kHz channels, in accordance with the most recent version of Recommendation ITU-R M.1084,provided:

- it shall not affect the 25 kHz channels of the present Appendix maritime mobile distress and safety, automatic identification system (AIS), and data exchange frequencies, especially the channels 06, 13, 15, 16, 17, 70, AIS 1 and AIS 2, nor the technical characteristics set forth in Recommendation ITU-R M.489-2 for those channels;
- implementation of 12.5 kHz channel interleaving and consequential national requirements shall be subject to coordination with affected administrations. (WRC-12)

Specific notes

f) The frequencies 156.300 MHz (channel 06), 156.525 MHz (channel 70), 156.800 MHz (channel 16), 161.975 MHz (AIS 1) and 162.025 MHz (AIS 2) may also be used by aircraft stations for the purpose of search and rescue operations and other safety-related communication. (WRC-07)

g) Channels 15 and 17 may also be used for on-board communications provided the effective radiated power does not exceed 1W, and subject to the national regulations of the administration concerned when these channels are used in its territorial waters.

h) Within the European Maritime Area and in Canada, these frequencies (channels 10, 67, 73) may also be used, if so required, by the individual administrations concerned, for communication between ship stations, aircraft stations and participating land stations engaged in coordinated search and rescue and anti-

pollution operations in local areas, under the conditions specified in Nos. **51.69**, **51.73**, **51.74**, **51.75**, **51.76**, **51.77** and **51.78**.

i) The preferred first three frequencies for the purpose indicated in Note ***a)*** are 156.450 MHz (channel 09), 156.625 MHz (channel 72) and 156.675 MHz (channel73).

j) Channel 70 is to be used exclusively for digital selective calling for distress, safety and calling.

k) Channel 13 is designated for use on a worldwide basis as a navigation safety communication channel, primarily for intership navigation safety communications. It may also be used for the ship movement and port operations service subject to the national regulations of the administrations concerned.

l) These channels (AIS 1 and AIS 2) are used for an automatic identification system (AIS) capable of providing world wide operation, unless other frequencies are designated on a regional basis for this purpose. Such use should be in accordance with the most recent version of Recommendation ITU-RM.1371. (WRC-07)

m) These channels may be operated as single frequency channels, subject to coordination with affected administrations. The following conditions apply for single frequency usage:

- The lower frequency portion of these channels may be operated as single frequency channels by ship and coast stations.
- Transmission using the upper frequency portion of these channels is limited to coast stations.
- If permitted by administrations and specified by national regulations, the upper frequency portion of these channels may be used by ship stations for transmission. All precautions should be taken to avoid harmful interference to channels AIS 1, AIS 2, 2027* and 2028*. (WRC-15)

  * From 1 January 2019, channel 2027 will be designated ASM 1 and channel 2028 will be designated ASM 2.

n) With the exception of AIS, the use of these channels (75 and 76) should be restricted to navigation-related communications only and all precautions should be taken to avoid harmful interference to channel 16, by limiting the output power to1W. (WRC-12)

o) (SUP - WRC-12)

p) Additionally, AIS 1 and AIS 2 may be used by the mobile-satellite service (Earth-to-space) for the reception of AIS transmissions from ships. (WRC-07)

q) When using these channels (10 and 11), all precautions should be taken to avoid harmful interference to channel70. (WRC-07)

r) In the maritime mobile service, this frequency is reserved for experimental use for future applications or systems (e.g. new AIS applications, man over board systems,etc.).If authorized by administrations for experimental use, the operation shall not cause harmful interference to, or claim protection from, stations operating in the fixed and mobile services. (WRC-12)

s) Channels 75 and 76 are also allocated to the mobile-satellite service (Earth-to-space) for the reception of long-range AIS broadcast messages from ships (Message 27; see the most recent version of Recommendation ITU-RM.1371). (WRC-12)

w. In Regions 1 and 3:

Until 1 January 2017, the frequency bands 157.200-157.325 MHz and 161.800-161.925 MHz (corresponding to channels: 24, 84, 25, 85, 26 and 86) may be used for digitally modulated emissions, subject to coordination with affected administrations. Stations using these channels or frequency bands for digitally modulated emissions shall not cause harmful interference to, or claim protection from, other stations operating in accordance with Article **5**.

From 1 January 2017, the frequency bands 157.200-157.325 MHz and 161.800-161.925 MHz (corresponding to channels: 24, 84, 25, 85, 26 and 86) are identified for the utilization of the VHF Data Exchange System (VDES) described in the most recent version of Recommendation ITU-R M.2092. These frequency bands may also be used for analogue modulation described in the most recent version of Recommendation ITU-R M.1084 by an administration that wishes to do so, subject to not causing harmful interference to, or claiming protection from other stations in the maritime mobile service using digitally modulated emissions and subject to coordination with affectedadministrations. (WRC-15)

ww. In Region 2, the frequency bands 157.200-157.325 and 161.800-161.925 MHz (corresponding to channels: 24, 84, 25, 85, 26 and 86) are designated for digitally modulated emissions in accordance with the most recent version of Recommendation ITU-R M.1842.

In Canada and Barbados, from 1 January 2019 the frequency bands 157.200-157.275 and 161.800-161.875 MHz (corresponding to channels: 24, 84, 25 and 85) may be used for digitally modulated emissions, such as those described in the most recent version of Recommendation ITU-R M.2092, subject to coordination with affected administrations. (WRC-15)

x) From 1 January 2017, in Angola, Botswana, Lesotho, Madagascar, Malawi, Mauritius, Mozambique, Namibia, Democratic Republic of the Congo, Seychelles, South Africa, Swaziland, Tanzania, Zambia

and Zimbabwe, the frequency bands 157.125-157.325 and 161.725-161.925 MHz (corresponding to channels: 82, 23, 83, 24, 84, 25, 85, 26 and 86) are designated for digitally modulated emissions.

From 1 January 2017, in China, the frequency bands 157.150 - 157.325 and 161.750 - 161.925 MHz (corresponding to channels: 23, 83, 24, 84, 25, 85, 26 and 86) are designated for digitally modulated emissions. (WRC-12)

y) These channels may be operated as single or duplex frequency channels, subject to coordination with affected administrations. (WRC-12)

z) Until 1 January 2019, these channels maybe used for possible testing of future AIS applications without causing harmful interference to, or claiming protection from, existing applications and stations operating in the fixed and mobile services.

From 1 January 2019, these channels are each split into two simplex channels. The channels 2027 and 2028 designated as ASM 1 and ASM 2 are used for application specific messages (ASM) as described in the most recent version of Recommendation ITU-R M.2092. (WRC-15)

AAA) From 1 January 2019, the channels 24, 84, 25 and 85 may be merged in order to form a unique duplex channel with a bandwidth of 100 kHz in order to operate the VDES terrestrial component described in the most recent version of Recommendation ITU-RM.2092. (WRC-15)

mm) Transmission on these channels is limited to coast stations. If permitted by administrations and specified by national regulations, these channels may be used by ship stations for transmission. All precautions should be taken to avoid harmful interference to channels AIS 1, AIS 2, 2027* and 2028*. (WRC-15)

* From 1 January 2019, channel 2027 will be designated ASM 1 and channel 2028 will be designated ASM 2.

w1) In Regions 1 and 3:

Until 1 January 2017, the frequency bands 157.025-157.175 MHz and 161.625-161.775 MHz (corresponding to channels: 80, 21, 81, 22, 82, 23 and 83) may be used for digitally modulated emissions, subject to coordination with affected administrations. Stations using these channels or frequency bands for digitally modulated emissions shall not cause harmful interference to, or claim protection from, other stations operating in accordance with Article **5**.

From 1 January 2017, the frequency bands 157.025-157.100 MHz and 161.625-161.700 MHz (corresponding to channels: 80, 21, 81 and 22) are identified for utilization of the digital systems described

in the most recent version of Recommendation ITU-R M.1842 using multiple 25 kHz contiguous channels.

From 1 January 2017, the frequency bands 157.150-157.175 MHz and 161.750-161.775 MHz (corresponding to channels: 23 and 83) are identified for utilization of the digital systems described in the most recent version of Recommendation ITU-R M.1842 using two 25 kHz contiguous channels. From 1 January 2017, the frequencies 157.125 MHz and 161.725 MHz (corresponding to channel: 82) are identified for the utilization of the digital systems described in the most recent version of Recommendation ITU-R M.1842.

The frequency bands 157.025-157.175 MHz and 161.625-161.775 MHz (corresponding to channels: 80, 21, 81, 22, 82, 23 and 83) can also be used for analogue modulation described in the most recent version of Recommendation ITU-R M.1084 by an administration that wishes to do so, subject to not claiming protection from other stations in the maritime mobile service using digitally modulated emissions and subject to coordination with affected administrations. (WRC-15)

zx) In the United States, these channels are used for communication between ship stations and coast stations for the purpose of public correspondence. (WRC-15)

zz) From 1 January 2019, channels 1027, 1028, 87 and 88 are used as single-frequency analogue channels for port operation and ship movement. (WRC-15)

Source: ITU Radio Regulations (2016); reproduced with permission from ITU

USA channel chart

Channel designator	Transmitting frequencies (MHz) From ship stations	From coast stations	S/D/R	Channel name	Restrictions
6	156.300	156.300	S	SAFETY	
8	156.400	156.400	S	COMMERCIAL	
9	156.450	156.450	S	CALLING	
10	156.500	156.500	S	COMMERCIAL	
11	156.550	156.550	S	VTS	
12	156.600	156.600	S	PORT OPS/VTS	
13	156.650	156.650	S	BRIDGE COM	1W
14	156.700	156.700	S	PORT OPS/VTS	
15	--	156.750	R	ENVIROMENTAL	RX ONLY
16	156.800	156.800	S	DISTRESS	
17	156.850	156.850	S	SAR	1W
20	157.000	161.600	D	PORT OPS	
24	157.200	161.800	D	TELEPHONE	
25	157.250	161.850	D	TELEPHONE	
26	157.300	161.900	D	TELEPHONE	
27	157.350	161.950	D	TELEPHONE	
28	157.400	162.000	D	TELEPHONE	
67	156.375	156.375	S	BRIDGE COM	1W
68	156.425	156.425	S	SHIP-SHIP	
69	156.475	156.475	S	SHIP-SHIP	
71	156.575	156.575	S	SHIP-SHIP	
72	156.625	156.625	S	SHIP-SHIP	
73	156.675	156.675	S	PORT OPS	
74	156.725	156.725	S	PORT OPS	
75	156.775	156.775	S	PORT OPS	1W
76	156.825	156.825	S	PORT OPS	1W
77	156.875	156.875	S	PORT OPS	1W
84	157.225	161.825	D	TELEPHONE	
85	157.275	161.875	D	TELEPHONE	
86	157.325	161.925	D	TELEPHONE	
87	157.375	157.375	S	TELEPHONE	
88	157.425	157.425	S	INTER-SHIP	
1001	156.050	156.050	S	PORT OPS/VTS	
1005	156.250	156.250	S	PORT OPS/VTS	
1007	156.350	156.350	S	COMMERCIAL	
1018	156.900	156.900	S	COMMERCIAL	
1019	156.950	156.950	S	COMMERCIAL	
1020	157.000	157.000	S	PORT OPS	
1021	157.050	157.050	S	US COAST GRD	
1022	157.100	157.100	S	US COAST GRD	
1023	157.150	157.150	S	US COAST GRD	

1063	156.175	156.175	S	PORT OPS/VTS	
1065	156.275	156.275	S	PORT OPS	
1066	156.325	156.325	S	PORT OPS	
1078	156.925	156.925	S	SHIP-SHIP	
1079	156.975	156.975	S	COMMERCIAL	
1080	157.025	157.025	S	COMMERCIAL	
1081	157.075	157.075	S	RESTRICTED	
1082	157.125	157.125	S	RESTRICTED	
1083	157.175	157.175	S	RESTRICTED	

Note:

Channel 70 is used exclusively for DSC and is not available for regular voice communications
Channel 70 frequency:156.525MHz

USA weather channels

	Transmitting frequencies (MHz)				
Channel designator	From ship stations	From coast stations	S/D/R	Channel name	Restrictions
WX1	--	162.550	R	NOAA WX1	RX ONLY
WX2	--	162.400	R	NOAA WX2	RX ONLY
WX3	--	162.475	R	NOAA WX3	RX ONLY
WX4	--	162.425	R	NOAA WX4	RX ONLY
WX5	--	162.450	R	NOAA WX5	RX ONLY
WX6	--	162.500	R	NOAA WX6	RX ONLY
WX7	--	162.525	R	NOAA WX7	RX ONLY

CANADA channel chart

Channel designator	Transmitting frequencies (MHz) From ship stations	From coast stations	S/D/R	Channel name	Restrictions
1	156.050	160.650	D	TELEPHONE	
2	156.100	160.700	D	TELEPHONE	
3	156.150	160.750	D	TELEPHONE	
4	156.200	160.800	D	CANADIAN CG	
5	156.250	160.850	D	TELEPHONE	
6	156.300	156.300	S	SAFETY	
7	156.350	160.950	D	TELEPHONE	
8	156.400	156.400	S	COMMERCIAL	
9	156.450	156.450	S	VTS	
10	156.500	156.500	S	VTS	
11	156.550	156.550	S	VTS	
12	156.600	156.600	S	PORT OPS/VTS	
13	156.650	156.650	S	BRIDGE COM	1W
14	156.700	156.700	S	PORT OPS/VTS	
15	156.750	156.750	S	COMMERCIAL	1W
16	156.800	156.800	S	DISTRESS	
17	156.850	156.850	S	SAR	1W
18	156.900	161.500	D	TELEPHONE	
19	156.950	161.550	D	CANADIAN CG	
20	157.000	161.600	D	CANADIAN CG	1W
21	157.050	161.650	D	CANADIAN CG	
22	157.100	161.700	D	TELEPHONE	
23	157.150	161.750	D	TELEPHONE	
24	157.200	161.800	D	TELEPHONE	
25	157.250	161.850	D	TELEPHONE	
26	157.300	161.900	D	TELEPHONE	
27	157.350	161.950	D	TELEPHONE	
28	157.400	162.000	D	TELEPHONE	
60	156.025	160.625	D	TELEPHONE	
61	156.075	160.675	D	CANADIAN CG	
62	156.125	160.725	D	CANADIAN CG	
63	156.175	160.775	D	TELEPHONE	
64	156.225	160.825	D	TELEPHONE	
65	156.275	160.875	D	TELEPHONE	
66	156.325	160.925	D	TELEPHONE	
67	156.375	156.375	S	COMMERCIAL	
68	156.425	156.425	S	SHIP-SHIP	
69	156.475	156.475	S	COMMERCIAL	
71	156.575	156.575	S	VTS	
72	156.625	156.625	S	SHIP-SHIP	
73	156.675	156.675	S	COMMERCIAL	

74	156.725	156.725	S	VTS	
75	156.775	156.775	S	PORT OPS	1W
76	156.825	156.825	S	PORT OPS	1W
77	156.875	156.875	S	PORT OPS	1W
78	156.925	161.525	D	TELEPHONE	
79	156.975	161.575	D	TELEPHONE	
80	157.025	161.625	D	TELEPHONE	
81	157.075	161.675	D	TELEPHONE	
82	157.125	161.725	D	CANADIAN CG	
83	157.175	161.775	D	CANADIAN CG	
84	157.225	161.825	D	TELEPHONE	
85	157.275	161.875	D	TELEPHONE	
86	157.325	161.925	D	TELEPHONE	
87	157.375	157.375	S	PORT OPS	
88	157.425	157.425	S	PORT OPS	
1001	156.050	156.050	S	COMMERCIAL	
1005	156.250	156.250	S	PORT OPS/VTS	
1007	156.350	156.350	S	COMMERCIAL	
1018	156.900	156.900	S	COMMERCIAL	
1019	156.950	156.950	S	CANADIAN CG	
1020	157.000	157.000	S	PORT OPS	
1021	157.050	157.050	S	RESTRICTED	
1022	157.100	157.100	S	CANADIAN CG	
1024	157.200	157.200	S	PORT OPS	
1025	157.250	157.250	S	PORT OPS	
1026	157.300	157.300	S	PORT OPS	
1027	157.350	157.350	S	CANADIAN CG	
1061	156.075	156.075	S	CANADIAN CG	
1062	156.125	156.125	S	CANADIAN CG	
1063	156.175	156.175	S	TELEPHONE	
1064	156.225	156.225	S	RESTRICTED	
1065	156.275	156.275	S	PORT OPS	
1066	156.325	156.325	S	PORT OPS	
1078	156.925	156.925	S	SHIP-SHIP	
1079	156.975	156.975	S	COMMERCIAL	
1080	157.025	157.025	S	COMMERCIAL	
1083	157.175	157.175	S	RESTRICTED	
1084	157.225	157.225	S	PORT OPS	
1085	157.275	157.275	S	CANADIAN CG	
1086	157.325	157.325	S	PORT OPS	
2019	--	161.550	R	PORT OPS	RX ONLY
2020	--	161.600	R	PORT OPS	RX ONLY
2023	--	161.750	R	SAFETY	RX ONLY
2026	--	161.900	R	PORT OPS	RX ONLY
2078	--	161.525	R	PORT OPS	RX ONLY

2079	--	161.575	R	PORT OPS	RX ONLY
2086	--	161.925	R	PORT OPS	RX ONLY

Note:

Channel 70 is used exclusively for DSC and is not available for regular voice communications
Channel 70 frequency:156.525MHz

Canada weather channels

Channel designator	Transmitting frequencies (MHz) From ship stations	From coast stations	S/D/R	Channel name	Restrictions
WX1	--	162.550	R	CANADA WX	Rx only
WX2	--	162.400	R	CANADA WX	Rx only
WX3	--	162.475	R	CANADA WX	Rx only

9 Dimensional drawings

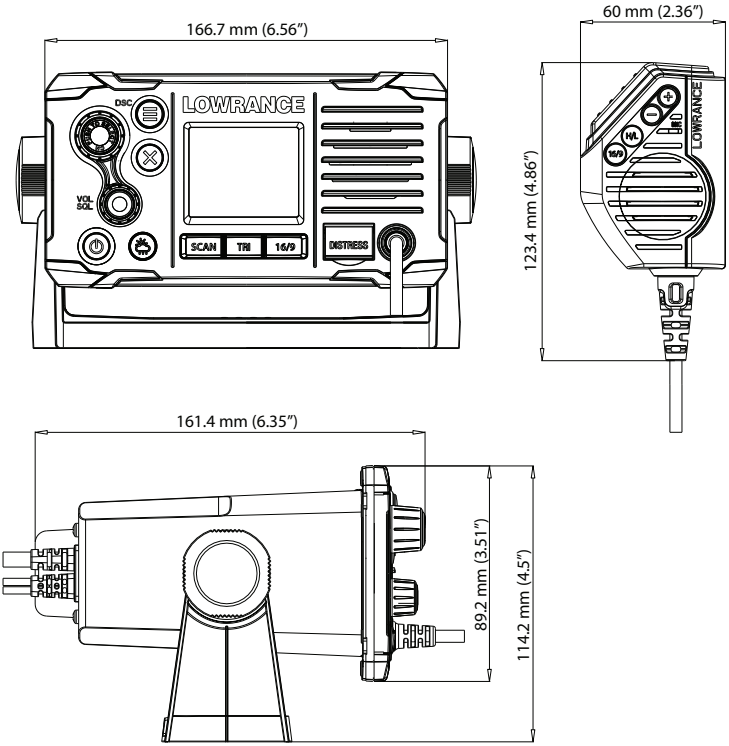

988-11181-003

LOWRANCE®